Ministero per i Beni e le Attività Culturali
Direzione Regionale
per i Beni Culturali e Paesaggistici della Calabria
Soprintendenza per i Beni Archeologici della Calabria

Regione Calabria
Dipartimento 12 -Turismo e Beni Culturali-

Accordo di Programma Quadro (APQ)
"Beni e attività culturali per il territorio della Regione Calabria"



CAPOCOLONNA (KR)

Ampliamento delle conoscenze della realtà archeologica di Capocolonna e messa in sicurezza delle strutture archeologiche riportate in luce

Codice APQ	**SPA 2 - 4**	Finanziamento	**Fondo Aree Sottoutilizzate (F.A.S.) - Delibera CIPE n. 84/2000**

PROGETTO DEFINITIVO

ELABORATO N.	TITOLO ELABORATO :	SCALA:
P.1c.1	**Capo C) Edificio da ristrutturare** **Relazione di calcolo**	

REDAZIONE		VISTI E PARERI	FIRMA E SIGLE
Ufficio di progettazione interno		Perizia di spesa N. del Approvata con Decreto N. del	**I PROGETTISTI**
Responsabile del procedimento	dott.ssa Simonetta BONOMI		
Progettazione	Dott.ssa Maria Grazia AISA Arch. Vincenzo AMMENDOLIA Arch. Elisabetta DOMINIJANNI		
Consulenze e collaborazioni esterne			
Consulenza tecnica	Ing. Angelo Gerardo MAIORINO Ing. Salvatore TALARICO Arch. Fortunato M. CRUGLIANO		**IL DIRETTORE REGIONALE** ***Francesco PROSPERETTI***

Sommario

Sommario 2
1 Rappresentazione generale dell'edificio 4
2 Normative 5
3 Descrizione del software 6
4 Descrizione hardware 7
5 Dati generali 8
5.1 Materiali 8
5.1.1 Materiali muratura 8
5.1.1.1 Proprietà muratura base 8
5.1.1.2 Proprietà muratura NTC 2008 1 8
5.1.1.3 Proprietà muratura NTC 2008 2 8
6 Dati di definizione 9
6.1 Preferenze commessa 9
6.1.1 Preferenze di analisi 9
6.1.2 Spettri NTC 08 9
6.1.3 Preferenze di verifica 12
6.1.3.1 Normativa di verifica in uso 12
6.1.4 Preferenze FEM 12
6.1.5 Moltiplicatori inerziali 13
6.1.6 Preferenze di analisi carichi superficiali 13
6.1.7 Preferenze progetto muratura 13
6.2 Azioni e carichi 13
6.2.1 Condizioni elementari di carico 13
6.2.2 Combinazioni di carico 14
Famiglia SLU 14
Famiglia SLE rara 14
Famiglia SLE frequente 14
Famiglia SLE quasi permanente 14
Famiglia SLU eccezionale 14
Famiglia SLD 14
Famiglia SLV 15
Famiglia SLV fondazioni 15
Famiglia Calcolo rigidezza torsionale/flessionale di piano 16
6.2.3 Definizioni di carichi lineari 16
6.2.4 Definizioni di carichi superficiali 16
6.3 Quote 17
6.3.1 Livelli 17
6.3.2 Tronchi 17
6.4 Elementi di input 17
6.4.1 Fili fissi 17
6.4.1.1 Fili fissi di piano 17
6.4.2 Pareti in muratura 17
6.4.3 Aperture su pareti 19
6.4.4 Carichi lineari 20
6.4.4.1 Carichi lineari di piano 20
6.4.5 Carichi superficiali 20
6.4.5.1 Carichi superficiali di piano 20
1 Dati di modellazione 23
1.1 Carichi concentrati sismici 23
1.2 Elementi muratura 163
1.2.1 Maschi in muratura 163
1.2.2 Travi di collegamento in muratura 167
1.3 Accelerazioni spettrali 171
2 Risultati numerici 180
2.1 Sollecitazioni aste 180
2.1.1 Convenzioni di segno aste 180
Sistema locale aste verticali 180
Sistema locale aste non verticali 181
Sistema locale aste derivanti da travi in c.a. 181
2.2 Sollecitazioni gusci 182
2.2.1 Convenzioni di segno gusci 182
Convenzione di segno per gusci non verticali 182
Convenzione di segno per gusci verticali 183
2.2.2 Sollecitazioni estreme gusci 184
2.2.3 Sollecitazioni estreme gusci non verticali 185
2.2.4 Sollecitazioni estreme gusci verticali 186
2.3 Spostamenti di interpiano 187
2.4 Tagli ai livelli 193
2.5 Baricentri delle rigidezze 195
2.6 Risposta modale 195
2.7 Equilibrio forze 196
Bilancio in condizione di carico: Pesi strutturali 196
Bilancio in condizione di carico: Permanenti portati 196
Bilancio in condizione di carico: Variabile A 196
Bilancio in condizione di carico: neve 196
Bilancio in condizione di carico: Sisma X SLV 196
Bilancio in condizione di carico: Sisma Y SLV 196
Bilancio in condizione di carico: Eccentricità Y per sisma X SLV 197
Bilancio in condizione di carico: Eccentricità X per sisma Y SLV 197
Bilancio in condizione di carico: Sisma X SLD 197
Bilancio in condizione di carico: Sisma Y SLD 197
Bilancio in condizione di carico: Eccentricità Y per sisma X SLD 197

Bilancio in condizione di carico: Eccentricità X per sisma Y SLD 197
2.8 Risposta di spettro 197
2.9 Annotazioni solutore 198
2.10 Statistiche soluzione 198
3 Verifiche 199
3.1 Verifica edifici esistenti 199
3.2 Verifiche maschi in muratura 201

1 Rappresentazione generale dell'edificio

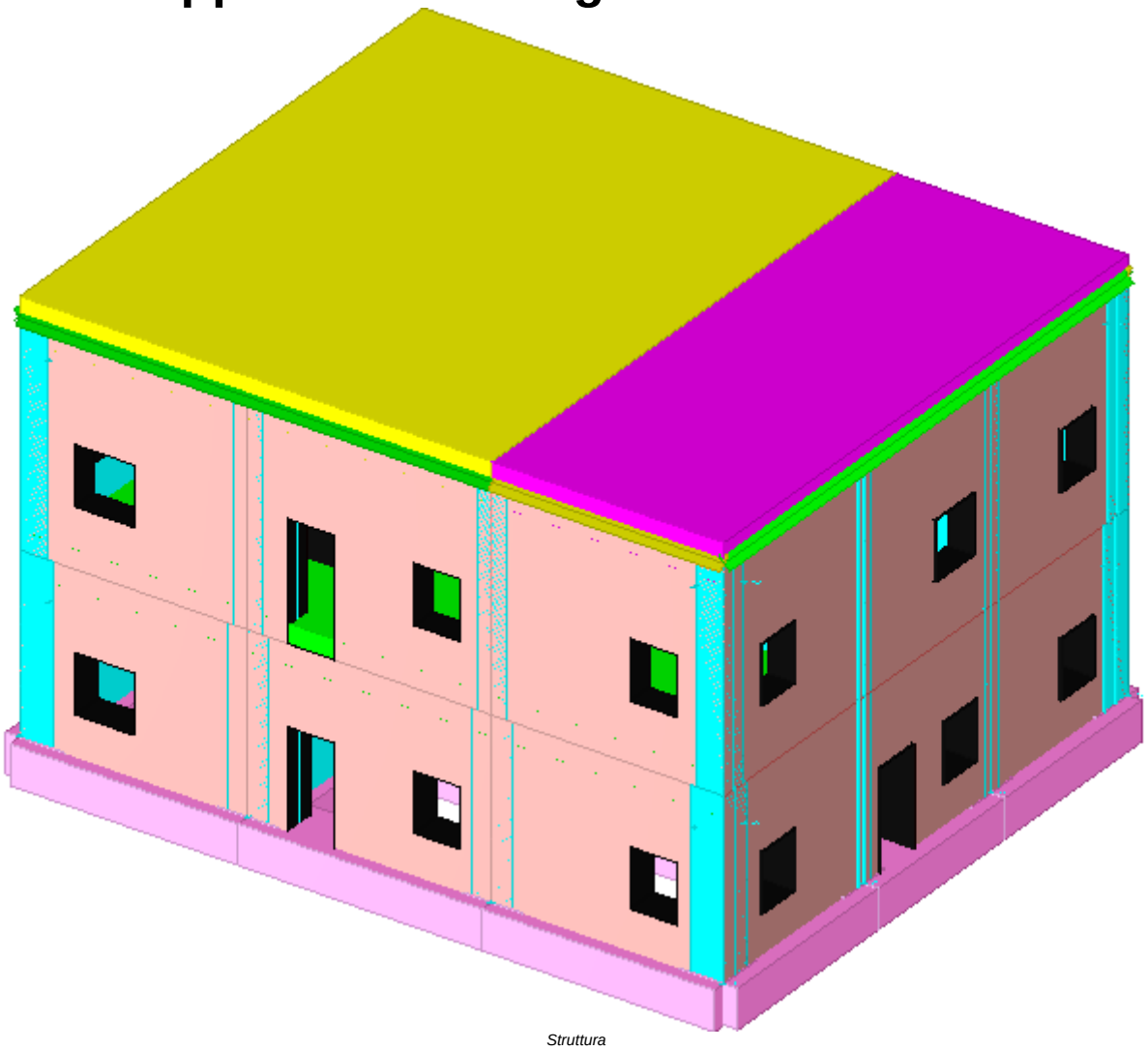

Struttura
Vista assonometrica dell'edificio nella sua interezza

2 Normative

D.M. LL. PP. 11-03-88
Norme Tecniche riguardanti le indagini sui terreni e sulle rocce, la stabilità dei pendii naturali e delle scarpate, i criteri generali e le prescrizioni per la progettazione, l'esecuzione ed il collaudo delle opere di sostegno delle terre e delle opere di fondazione.
Circolare Ministeriale del 24-07-88, n. 30483/STC.

Legge 02-02-74 n. 64, art. 1 - D.M. 11-03-88.
Norme Tecniche riguardanti le indagini sui terreni e sulle rocce, la stabilità dei pendii naturali e delle scarpate, i criteri generali e le prescrizioni per la progettazione, l'esecuzione ed il collaudo delle opere di sostegno delle terre e delle opere di fondazione.
Norme Tecniche per le Costruzioni - D.M. 14-01-08
Sicurezza (cap.2), Azioni sulle costruzioni (cap.3), Costruzioni in calcestruzzo (par.4.1), Costruzioni in legno (par.4.4), Costruzioni in muratura (par.4.5), Progettazione geotecnica (cap.6), Progettazione per azioni sismiche (cap.7), Costruzioni esistenti (cap.8), Riferimenti tecnici (cap.12), EC3.

3 Descrizione del software

DESCRIZIONE DEL PROGRAMMA SISMICAD

Si tratta di un programma di calcolo strutturale che nella versione più estesa è dedicato al progetto e verifica degli elementi in cemento armato, acciaio, muratura e legno di opere civili. Il programma utilizza come analizzatore e solutore del modello strutturale un proprio solutore agli elementi finiti tridimensionale fornito col pacchetto. Il programma è sostanzialmente diviso in tre moduli: un pre processore che consente l'introduzione della geometria e dei carichi e crea il file dati di input al solutore; il solutore agli elementi finiti; un post processore che a soluzione avvenuta elabora i risultati eseguendo il progetto e la verifica delle membrature e producendo i grafici ed i tabulati di output.

SPECIFICHE TECNICHE

Denominazione del software: Sismicad 12.1
Produttore del software: Concrete
Concrete srl, via della Pieve, 15, 35121 PADOVA - Italy
http://www.concrete.it
Rivenditore: CONCRETE SRL - Via della Pieve 19 - 35121 Padova - tel.049-8754720
Versione: 12.1
Identificatore licenza: SW-3348417
Intestatario della licenza: MAIORINO ING. ANGELO GERARDO - LARGO I° LUGLIO - PADULA (SA)
Versione regolarmente licenziata

SCHEMATIZZAZIONE STRUTTURALE E CRITERI DI CALCOLO DELLE SOLLECITAZIONI

Il programma schematizza la struttura attraverso l'introduzione nell'ordine di fondazioni, poste anche a quote diverse, platee, platee nervate, plinti e travi di fondazione poggianti tutte su suolo elastico alla Winkler, di elementi verticali, pilastri e pareti in c.a. anche con fori, di orizzontamenti costituiti da solai orizzontali e inclinati (falde), e relative travi di piano e di falda; è ammessa anche l'introduzione di elementi prismatici in c.a. di interpiano con possibilità di collegamento in inclinato a solai posti a quote diverse. I nodi strutturali possono essere connessi solo a travi, pilastri e pareti, simulando così impalcati infinitamente deformabili nel piano, oppure a elementi lastra di spessore dichiarato dall'utente simulando in tal modo impalcati a rigidezza finita. I nodi appartenenti agli impalcati orizzontali possono essere connessi rigidamente ad uno o più nodi principali giacenti nel piano dell'impalcato; generalmente un nodo principale coincide con il baricentro delle masse. Tale opzione, oltre a ridurre significativamente i tempi di elaborazione, elimina le approssimazioni numeriche connesse all'utilizzo di elementi lastra quando si richiede l'analisi a impalcati infinitamente rigidi. Per quanto concerne i carichi, in fase di immissione dati, vengono definite, in numero a scelta dell'utente, condizioni di carico elementari le quali, in aggiunta alle azioni sismiche e variazioni termiche, vengono combinate attraverso coefficienti moltiplicativi per fornire le combinazioni richieste per le verifiche successive. L'effetto di disassamento delle forze orizzontali, indotto ad esempio dai torcenti di piano per costruzioni in zona sismica, viene simulato attraverso l'introduzione di eccentricità planari aggiuntive le quali costituiscono ulteriori condizioni elementari di carico da cumulare e combinare secondo i criteri del paragrafo precedente. Tipologicamente sono ammessi sulle travi e sulle pareti carichi uniformemente distribuiti e carichi trapezoidali; lungo le aste e nei nodi di incrocio delle membrature sono anche definibili componenti di forze e coppie concentrate comunque dirette nello spazio. Sono previste distribuzioni di temperatura, di intensità a scelta dell'utente, agenti anche su singole porzioni di struttura. Il calcolo delle sollecitazioni si basa sulle seguenti ipotesi e modalità: - travi e pilastri deformabili a sforzo normale, flessione deviata, taglio deviato e momento torcente. Sono previsti coefficienti riduttivi dei momenti di inerzia a scelta dell'utente per considerare la riduzione della rigidezza flessionale e torsionale per effetto della fessurazione del conglomerato cementizio. E' previsto un moltiplicatore della rigidezza assiale dei pilastri per considerare, se pure in modo approssimato, l'accorciamento dei pilastri per sforzo normale durante la costruzione. - le travi di fondazione su suolo alla Winkler sono risolte in forma chiusa tramite uno specifico elemento finito; - le pareti in c.a. sono analizzate schematizzandole come elementi lastra-piastra discretizzati con passo massimo assegnato in fase di immissione dati; - le pareti in muratura possono essere schematizzate con elementi lastra-piastra con spessore flessionale ridotto rispetto allo spessore membranale.- I plinti su suolo alla Winkler sono modellati con la introduzione di molle verticali elastoplastiche. La traslazione orizzontale a scelta dell'utente è bloccata o gestita da molle orizzontali di modulo di reazione proporzionale al verticale. - I pali sono modellati suddividendo l'asta in più aste immerse in terreni di stratigrafia definita dall'utente. Nei nodi di divisione tra le aste vengono inserite molle assialsimmetriche elastoplastiche precaricate dalla spinta a riposo che hanno come pressione limite minima la spinta attiva e come pressione limite massima la spinta passiva modificabile attraverso opportuni coefficienti. - i plinti su pali sono modellati attraverso aste di di rigidezza elevata che collegano un punto della struttura in elevazione con le aste che simulano la presenza dei pali;- le piastre sono discretizzate in un numero finito di elementi lastra-piastra con passo massimo assegnato in fase di immissione dati; nel caso di platee di fondazione i nodi sono collegati al suolo da molle aventi rigidezze alla traslazione verticale ed richiesta anche orizzontale.- La deformabilità nel proprio piano di piani dichiarati non infinitamente rigidi e di falde (piani inclinati) può essere controllata attraverso la introduzione di elementi membranali nelle zone di solaio. - I disassamenti tra elementi asta sono gestiti automaticamente dal programma attraverso la introduzione di collegamenti rigidi locali.- Alle estremità di elementi asta è possibile inserire svincolamenti tradizionali così come cerniere parziali (che trasmettono una quota di ciò che trasmetterebbero in condizioni di collegamento rigido) o cerniere plastiche.- Alle estremità di elementi bidimensionali è possibile inserire svincolamenti con cerniere parziali del momento flettente avente come asse il bordo dell'elemento.- Il calcolo degli effetti del sisma è condotto, a scelta dell'utente, con analisi statica lineare, con analisi dinamica modale o con analisi statica non lineare, in accordo alle varie normative adottate. Le masse, nel caso di impalcati dichiarati rigidi sono concentrate nei nodi principali di piano altrimenti vengono considerate diffuse nei nodi giacenti sull'impalcato stesso. Nel caso di analisi sismica vengono anche controllati gli spostamenti di interpiano.

VERIFICHE DELLE MURATURE

Per le murature è prevista la verifica a schiacciamento eccentrico secondo il metodo delle tensioni ammissibili o agli stati limite ai sensi del D.M. LL.PP. 20-11-87. In presenza di sisma analizzato secondo il DM 16-1-96 le verifiche possono essere condotte sulla base della Circ. LL.PP. 30-07-81 n.21745 e le direttive tecniche dei D.G.R. Umbria 5180/98 e D.G.R. 2153/98 in attuazione L.61/98. In particolare vengono svolte le verifiche a taglio, a ribaltamento ed a pressoflessione sia nel piano ortogonale che nel piano del maschio. Vengono inoltre evidenziati a richiesta i coefficienti richiesti dalla L.61/98. La verifica a taglio viene condotta utilizzando un solutore POR per i maschi compresi tra due piani orizzontali dichiarati infinitamente rigidi in sede in input dei livelli. I carichi verticali si pensano centrati e le variazioni di sforzo normale dovute alle azioni sismiche sono prese in conto a scelta dell'utente. Nel caso si utilizzi un modello non lineare (ad esempio per la presenza di tiranti o di fondazioni non reagenti al sollevamento) i carichi verticali comprendono sempre anche il contributo delle azioni sismiche. Le azioni orizzontali prese in conto sono per ogni piano la somma delle forze sismiche agenti al di sopra del piano. Ai fini della verifica POR la analisi del modello agli elementi finiti ha il solo scopo di determinare lo sforzo normale nei maschi murari. Gli effetti delle azioni orizzontali infatti vanno valutati con diverso solutore (POR). Ai maschi che non sono compresi tra piani rigidi e quindi anche ai maschi che sostengono le falde non può essere applicato un solutore POR. Per questi maschi le verifiche a taglio vengono eseguite, trascurando a favore di sicurezza il contributo della duttilità, a partire dai risultati della analisi elastica forniti dal modello ad elementi finiti. I carichi verticali sono pensati centrati. Sia nel caso lineare che nel non lineare lo sforzo normale ed i tagli si ottengono per ogni combinazione sommando i contributi di tutte le condizioni di carico.In presenza di sisma analizzato secondo il D.M. 16-01-96 le verifiche a taglio, a pressoflessione nel piano e fuori piano e a ribaltamento possono essere eseguite secondo D.M. LL.PP 20-11-87. La analisi sismica può anche essere condotta secondo OPCM 3431 o D.M. 14-01-08 con analisi statica lineare, analisi dinamica modale o analisi statica non lineare. Le verifiche a taglio, a pressoflessione nel piano e fuori piano vengono condotte nel rispetto della norma con distinzione tra edifici nuovi ed edifici esistenti. Nel caso di analisi elastica le murature sono modellate con elementi bidimensionali (shell); nel caso di analisi statica non lineare le murature sono modellate con un particolare elemento finito monodimensionale a comportamento bilineare elastico perfettamente plastico.

4 Descrizione hardware

Processore	Intel(R) Core(TM) i7-3770K CPU @ 3.50GHz
Architettura	x86
Frequenza	3510 MHz
Memoria	15,95 GB
Sistema operativo	Microsoft Windows 7 Professional Service Pack 1 (64 bit)

5 Dati generali

5.1 Materiali

5.1.1 Materiali muratura

5.1.1.1 Proprietà muratura base

***Descrizione**: Descrizione o nome assegnato all'elemento.*
***E**: Modulo di elasticità longitudinale del materiale per edifici o materiali nuovi. [daN/cm2]*
***Gamma**: Peso specifico del materiale. [daN/cm3]*
***Poisson**: Coefficiente di Poisson. Il valore è adimensionale.*
***G**: Modulo di elasticità tangenziale del materiale, viene impiegato nella modellazione di aste. [daN/cm2]*
***Alfa**: Coefficiente longitudinale di dilatazione termica. [°C-1]*

Descrizione	E	Gamma	Poisson	G	Alfa
Muratura in pietrame consolidata con iniezioni LC1	24000	0.0022	0.49	8053.69	0.000006

5.1.1.2 Proprietà muratura NTC 2008 1

***Descrizione**: Descrizione o nome assegnato all'elemento.*
***Tipo blocchi**: Tipo di blocchi (D.M. 14-01-08 11.10.1, 11.10.V, VI).*
***Cat.blocchi**: Categoria blocchi (D.M. 14-01-08 4.5.6.1).*
***fbk**: Resistenza caratteristica a compressione dell'elemento dichiarata dal produttore (D.M. 14-01-08 11.10.1.1.1). [daN/cm2]*
***fbk_**: Resistenza caratteristica a compressione dell'elemento in direzione orizzontale nel piano del muro. Dato da richiedere al produttore (D.M. 14-01-08 11.10.1.1.1). [daN/cm2]*
***Tipo malta**: Tipo di malta (D.M. 14-01-08 11.10.2).*
***Res.compr.malta**: Resistenza media a compressione della malta (D.M. 14-01-08 11.10.2.1). [daN/cm2]*
***GammaM**: Coefficiente parziale di sicurezza sulla resistenza a compressione della muratura (D.M. 14-01-08 4.5.6.1, 4.5.II). Il valore è adimensionale.*

Descrizione	Tipo blocchi	Cat.blocchi	fbk	fbk_	Tipo malta	Res.compr.malta	GammaM
Muratura in pietrame consolidata con iniezioni LC1	Altro	II	50	10	Composizione prescritta	25	3

5.1.1.3 Proprietà muratura NTC 2008 2

***Descrizione**: Descrizione o nome assegnato all'elemento.*
***Livello di conoscenza**: Indica se il materiale è nuovo o esistente, e in tal caso il livello di conoscenza secondo Circ. 02/02/09 n. 617 §C8A. Informazione impiegata solo in analisi D.M. 14-01-08 (N.T.C.).*
***Cl.esec.**: Classe di esecuzione (D.M. 14-01-08 4.5.6.1).*
***fk**: Resistenza caratteristica a compressione della muratura (D.M. 14-01-08 4.5.6.1, 11.10.3.1). [daN/cm2]*
***fvk0**: Resistenza caratteristica a taglio della muratura in assenza di tensioni normali (D.M. 14-01-08 4.5.6.1, 11.10.3.2). [daN/cm2]*
***fhk**: Resistenza caratteristica della muratura a compressione in direzione orizzontale (nel piano della parete) D.M. 14-01-08. [daN/cm2]*
***fkt**: Resistenza caratteristica a trazione (D.M. 14-01-08). [daN/cm2]*
***f medio**: Resistenza media a compressione della muratura, per materiale esistente. [daN/cm2]*
***tau medio**: Resistenza media a taglio della muratura, per materiale esistente. [daN/cm2]*
***E medio**: Valore medio del modulo di elasticità normale utilizzato per materiale esistente in caso di analisi statica non-lineare (pushover). [daN/cm2]*
***G medio**: Valore medio del modulo di elasticità tangenziale utilizzato per materiale esistente in caso di analisi statica non-lineare (pushover). [daN/cm2]*

Descrizione	Livello di conoscenza	Cl.esec.	fk	fvk0	fhk	fkt	f medio	tau medio	E medio	G medio
Muratura in pietrame consolidata con iniezioni LC1	LC1 (FC = 1,35)	2	30	2	10	0	30	0.9	22500	7000

6 Dati di definizione

6.1 Preferenze commessa

6.1.1 Preferenze di analisi

Metodo di analisi	D.M. 14-01-08 (N.T.C.)	
Tipo di costruzione	2	
Vn	50	
Classe d'uso	II	
Vr	50	
Tipo di analisi	Lineare dinamica	
Località	Crotone, Isola Di Capo Rizzuto, Marinella - Latitudine (deg) 39,0276°; Longitudine (deg) 17,2052° (N 39° 1' 39"; E 17° 12' 19") ED50	
Zona sismica	Zona 1	
Categoria del suolo	C - sabbie ed argille medie	
Categoria topografica	T1	
Ss orizzontale SLD	1.5	
Tb orizzontale SLD	0.16	[s]
Tc orizzontale SLD	0.479	[s]
Td orizzontale SLD	1.79	[s]
Ss orizzontale SLV	1.5	
Tb orizzontale SLV	0.189	[s]
Tc orizzontale SLV	0.567	[s]
Td orizzontale SLV	2.102	[s]
Ss verticale	1	
Tb verticale	0.05	[s]
Tc verticale	0.15	[s]
Td verticale	1	[s]
St	1	
PVr SLD (%)	63	
Tr SLD	50	
Ag/g SLD	0.0475	
Fo SLD	2.357	
Tc* SLD	0.31	
PVr SLV (%)	10	
Tr SLV	475	
Ag/g SLV	0.1256	
Fo SLV	2.446	
Tc* SLV	0.399	
Smorzamento viscoso (%)	5	
Classe di duttilità	CD"B"	
Rotazione del sisma	0	[deg]
Quota dello '0' sismico	0	[cm]
Regolarità in pianta	No	
Regolarità in elevazione	No	
Edificio muratura	Si	
Tipologia muratura	Costruzioni in muratura ordinaria	
alfaU/alfa1 muratura	Costruzioni in muratura ordinaria a due o più piani alfaU/alfa1=1.8	
Edificio esistente	Si	
Altezza costruzione	1010	[cm]
C1	0.05	
T1	0.283	[s]
Lambda SLD	1	
Lambda SLV	1	
Lambda verticale	1	
Numero modi	15	
Metodo di Ritz	applicato	
Torsione accidentale semplificata	No	
Torsione accidentale per piani (livelli e falde) flessibili	No	
Eccentricità X (per sisma Y) livello "Fondazione"	0	[cm]
Eccentricità Y (per sisma X) livello "Fondazione"	0	[cm]
Eccentricità X (per sisma Y) livello "Piano 1"	89.5	[cm]
Eccentricità Y (per sisma X) livello "Piano 1"	73.3	[cm]
Eccentricità X (per sisma Y) livello "copertura"	89.5	[cm]
Eccentricità Y (per sisma X) livello "copertura"	73.3	[cm]
Limite spostamenti interpiano	0.003	
Moltiplicatore sisma X per combinazioni di default	1	
Moltiplicatore sisma Y per combinazioni di default	1	
Fattore di struttura per sisma X	2.7	
Fattore di struttura per sisma Y	2.7	
Fattore di struttura per sisma Z	1.5	
Applica 1% (§ 3.1.1)	No	
Coefficiente di sicurezza portanza fondazioni superficiali	2.3	
Coefficiente di sicurezza scorrimento fondazioni superficiali	1.1	
Coefficiente di sicurezza portanza verticale pali infissi, punta	1.15	
Coefficiente di sicurezza portanza verticale pali infissi, laterale compressione	1.15	
Coefficiente di sicurezza portanza verticale pali infissi, laterale trazione	1.25	
Coefficiente di sicurezza portanza verticale pali trivellati, punta	1.35	
Coefficiente di sicurezza portanza verticale pali trivellati, laterale compressione	1.15	
Coefficiente di sicurezza portanza verticale pali trivellati, laterale trazione	1.25	
Coefficiente di sicurezza portanza verticale micropali, punta	1.35	
Coefficiente di sicurezza portanza verticale micropali, laterale compressione	1.15	
Coefficiente di sicurezza portanza verticale micropali, laterale trazione	1.25	
Coefficiente di sicurezza portanza trasversale pali	1.3	
Fattore di correlazione resistenza caratteristica dei pali in base alle verticali indagate	1.7	

6.1.2 Spettri NTC 08

Spettro di risposta elastico in accelerazione delle componenti orizzontali SLD § 3.2.3.2.1 (3.2.4)

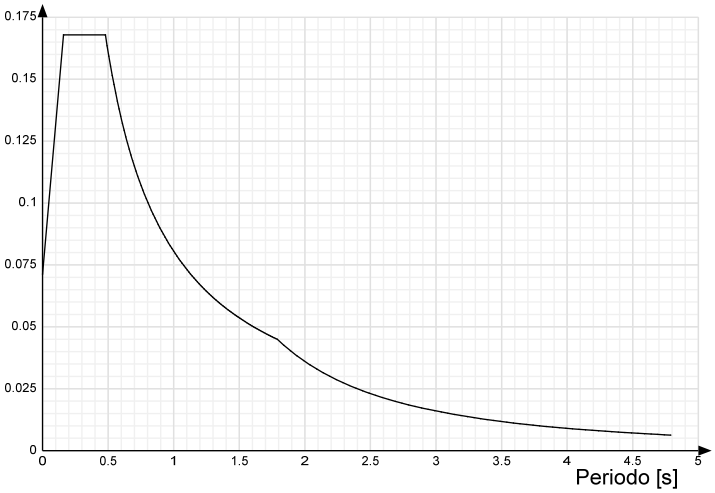

Spettro di risposta elastico in accelerazione della componente verticale SLD § 3.2.3.2.2 (3.2.10)

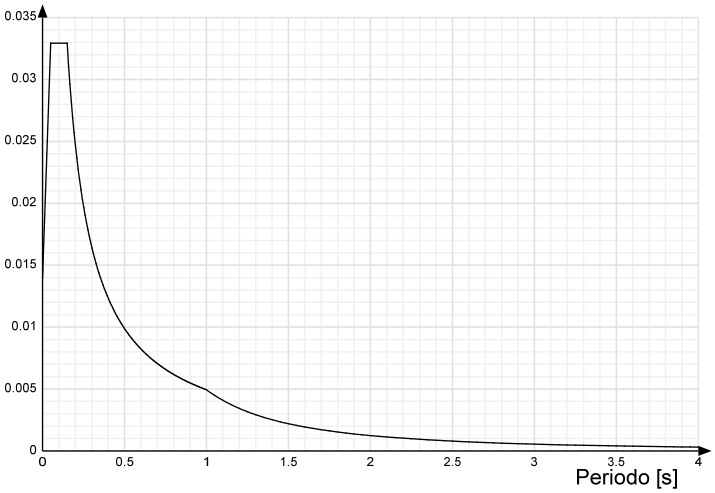

Spettro di risposta elastico in accelerazione delle componenti orizzontali SLV § 3.2.3.2.1 (3.2.4)

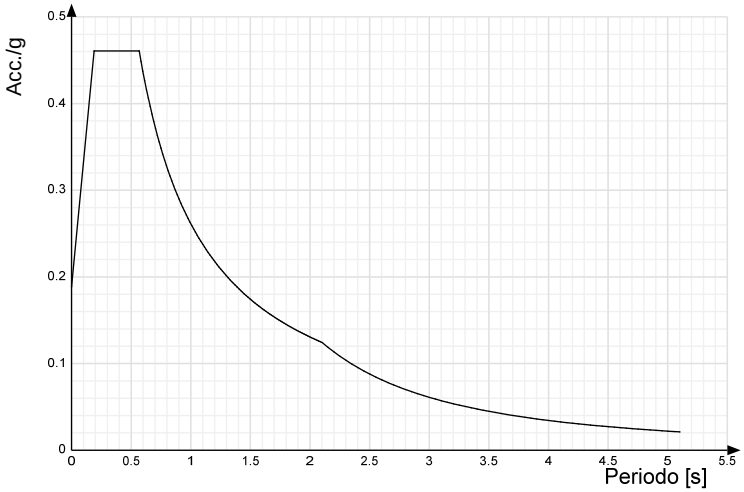

Spettro di risposta elastico in accelerazione della componente verticale SLV § 3.2.3.2.2 (3.2.10)

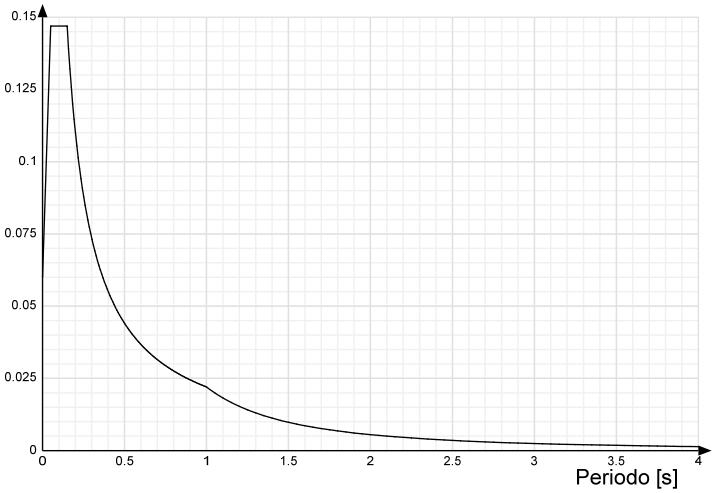

Spettro di risposta di progetto in accelerazione delle componenti orizzontali SLD § 3.2.3.4

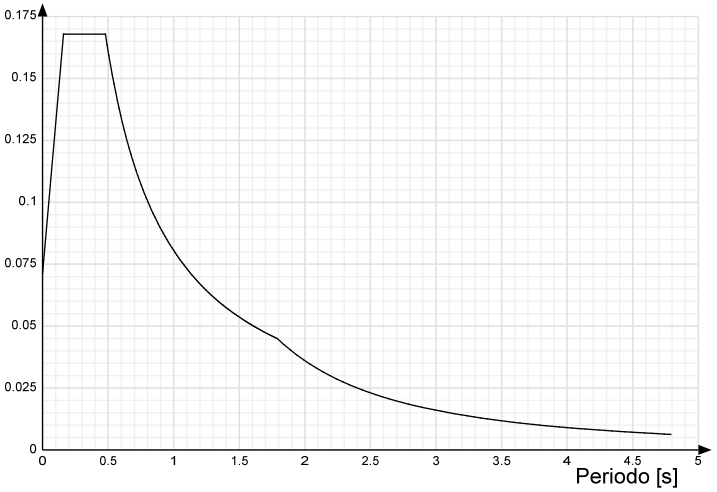

Spettro di risposta di progetto in accelerazione della componente verticale SLD § 3.2.3.4

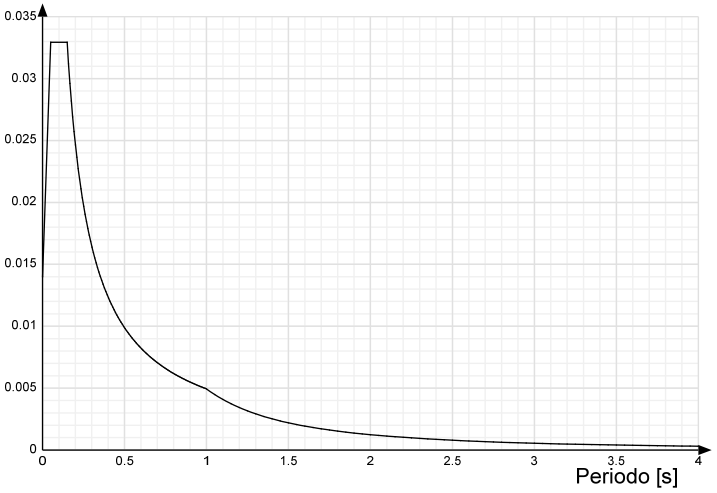

Spettro di risposta di progetto in accelerazione della componente X SLV § 3.2.3.5

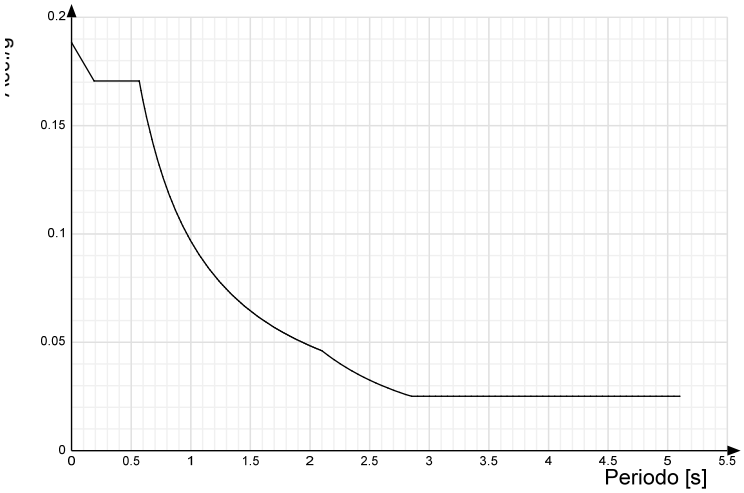

Spettro di risposta di progetto in accelerazione della componente Y SLV § 3.2.3.5

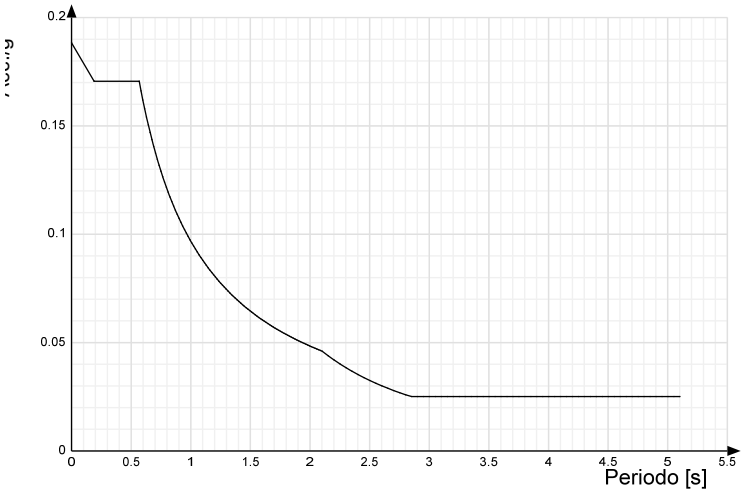

Spettro di risposta di progetto in accelerazione della componente verticale SLV § 3.2.3.5

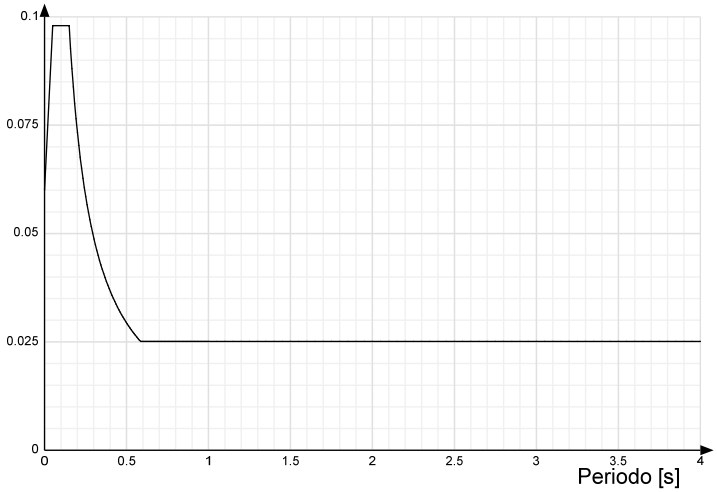

6.1.3 Preferenze di verifica

6.1.3.1 Normativa di verifica in uso

Norma di verifica	D.M. 14-01-08 (N.T.C.)
Cemento armato	Preferenze analisi di verifica in stato limite
Legno	Preferenze di verifica legno NTC08
Acciaio	Preferenze di verifica acciaio EC3
Alluminio	Preferenze di verifica alluminio EC3
Psi	

6.1.4 Preferenze FEM

Dimensione massima ottimale mesh pareti (default)	40	[cm]
Dimensione massima ottimale mesh piastre (default)	40	[cm]

Tipo di mesh dei gusci (default)	Quadrilateri o triangoli	
Tipo di mesh imposta ai gusci	Specifico dell'elemento	
Metodo P-Delta	non utilizzato	
Analisi buckling	non utilizzata	
Rapporto spessore flessionale/membranale gusci muratura verticali	0.2	
Rapporto spessore flessionale/membranale gusci di pareti in legno	1	
Tolleranza di parallelismo	4.99	[deg]
Tolleranza di unicità punti	10	[cm]
Tolleranza generazione nodi di aste	1	[cm]
Tolleranza di parallelismo in suddivisione aste	4.99	[deg]
Tolleranza generazione nodi di gusci	4	[cm]
Tolleranza eccentricità carichi concentrati	100	[cm]
Considera deformazione a taglio delle piastre	No	
Modello elastico pareti in muratura	Gusci	
Concentra masse pareti nei vertici	No	
Segno risultati analisi spettrale	Analisi statica	
Memoria utilizzabile dal solutore	8000000	
Metodo di risoluzione della matrice	Matrici sparse	
Scrivi commenti nel file di input	No	
Scrivi file di output in formato testo	No	
Solidi colle e corpi ruvidi (default)	Solidi reali	
Moltiplicatore rigidezza molla torsionale applicata ad aste di fondazione	1	
Modello trave su suolo alla Winkler nel caso di modellazione lineare	Equilibrio elastico	

6.1.5 Moltiplicatori inerziali

***Tipologia**: Tipo di entità a cui si riferiscono i moltiplicatori inerziali.*
***J2**: Moltiplicatore inerziale di J2. Il valore è adimensionale.*
***J3**: Moltiplicatore inerziale di J3. Il valore è adimensionale.*
***Jt**: Moltiplicatore inerziale di Jt. Il valore è adimensionale.*
***A**: Moltiplicatore dell'area della sezione. Il valore è adimensionale.*
***A2**: Moltiplicatore dell'area a taglio in direzione 2. Il valore è adimensionale.*
***A3**: Moltiplicatore dell'area a taglio in direzione 3. Il valore è adimensionale.*
***Conci rigidi**: Fattore di riduzione dei tronchi rigidi. Il valore è adimensionale.*

Tipologia	J2	J3	Jt	A	A2	A3	Conci rigidi
Trave C.A.	1	1	0.01	1	1	1	0.5
Pilastro C.A.	1	1	0.01	1	1	1	0.5
Trave di fondazione	1	1	0.01	1	1	1	0.5
Palo	1	1	0.01	1	1	1	0
Trave in legno	1	1	1	1	1	1	1
Colonna in legno	1	1	1	1	1	1	1
Trave in acciaio	1	1	1	1	1	1	1
Colonna in acciaio	1	1	1	1	1	1	1
Trave di reticolare in acciaio	1	1	1	1	1	1	1
Maschio in muratura	0	1	0	1	1	1	1
Trave di accoppiamento in muratura	0	1	0	1	1	1	1
Trave di scala C.A. nervata	1	1	1	1	1	1	0.5
Trave tralicciata	1	1	0.01	1	1	1	0.5

6.1.6 Preferenze di analisi carichi superficiali

Detrazione peso proprio solai nelle zone di sovrapposizione	non applicata	
Metodo di ripartizione	a zone d'influenza	
Percentuale carico calcolato a trave continua	0	
Esegui smoothing diagrammi di carico	applicata	
Tolleranza smoothing altezza trapezi	0.001	[daN/cm]
Tolleranza smoothing altezza media trapezi	0.001	[daN/cm]

6.1.7 Preferenze progetto muratura

Forza minima aggancio al piano (default)	30	[daN/cm]
Denominatore per momento ortogonale (default)	8	
Minima resistenza trazione travi (default)	30000	[daN]
Angolo cuneo verifica ribaltamento (default)	30	[deg]
Considera d = 0.8 * h nei maschi senza fibre compresse	Si	

6.2 Azioni e carichi

6.2.1 Condizioni elementari di carico

***Descrizione**: Nome assegnato alla condizione elementare.*
***Nome breve**: Nome breve assegnato alla condizione elementare.*
***I/II**: Descrive la classificazione della condizione (necessario per strutture in acciaio e in legno).*
***Durata**: Descrive la durata della condizione (necessario per strutture in legno).*
***Psi0**: Coefficiente moltiplicatore Psi0. Il valore è adimensionale.*
***Psi1**: Coefficiente moltiplicatore Psi1. Il valore è adimensionale.*
***Psi2**: Coefficiente moltiplicatore Psi2. Il valore è adimensionale.*
***Var.segno**: Descrive se la condizione elementare ha la possibilità di variare di segno.*

Descrizione	Nome breve	I/II	Durata	Psi0	Psi1	Psi2	Var.segno
Pesi strutturali	Pesi		Permanente	0	0	0	
Permanenti portati	Port.	I	Permanente	0	0	0	
Variabile A	Variabile A	I	Media	0.7	0.5	0.3	
neve	neve	I	Media	0.5	0.2	0	
Delta T	Dt	II	Media	0.6	0.5	0	No
Sisma X SLV	X SLV			0	0	0	
Sisma Y SLV	Y SLV			0	0	0	
Sisma Z SLV	Z SLV			0	0	0	
Eccentricità Y per sisma X SLV	EY SLV			0	0	0	

Descrizione	Nome breve	I/II	Durata	Psi0	Psi1	Psi2	Var.segno
Eccentricità X per sisma Y SLV	EX SLV			0	0	0	
Sisma X SLD	X SLD			0	0	0	
Sisma Y SLD	Y SLD			0	0	0	
Sisma Z SLD	Z SLD			0	0	0	
Eccentricità Y per sisma X SLD	EY SLD			0	0	0	
Eccentricità X per sisma Y SLD	EX SLD			0	0	0	
Terreno sisma X SLV	Tr x SLV			0	0	0	
Terreno sisma Y SLV	Tr y SLV			0	0	0	
Terreno sisma Z SLV	Tr z SLV			0	0	0	
Terreno sisma X SLD	Tr x SLD			0	0	0	
Terreno sisma Y SLD	Tr y SLD			0	0	0	
Terreno sisma Z SLD	Tr z SLD			0	0	0	
Rig. Ux	R Ux			0	0	0	
Rig. Uy	R Uy			0	0	0	
Rig. Rz	R Rz			0	0	0	

6.2.2 Combinazioni di carico

Tutte le combinazioni di carico vengono raggruppate per famiglia di appartenenza. Le celle di una riga contengono i coefficienti moltiplicatori della i-esima combinazione, dove il valore della prima cella è da intendersi come moltiplicatore associato alla prima condizione elementare, la seconda cella si riferisce alla seconda condizione elementare e così via.

Famiglia SLU

Il nome compatto della famiglia è SLU.

Nome	Nome breve	Pesi	Port.	Variabile A	neve	Dt
1	**SLU 1**	1	0	0	0	0
2	**SLU 2**	1	0	0	1.5	0
3	**SLU 3**	1	0	1.05	1.5	0
4	**SLU 4**	1	0	1.5	0	0
5	**SLU 5**	1	0	1.5	0.75	0
6	**SLU 6**	1	1.5	0	0	0
7	**SLU 7**	1	1.5	0	1.5	0
8	**SLU 8**	1	1.5	1.05	1.5	0
9	**SLU 9**	1	1.5	1.5	0	0
10	**SLU 10**	1	1.5	1.5	0.75	0
11	**SLU 11**	1.3	0	0	0	0
12	**SLU 12**	1.3	0	0	1.5	0
13	**SLU 13**	1.3	0	1.05	1.5	0
14	**SLU 14**	1.3	0	1.5	0	0
15	**SLU 15**	1.3	0	1.5	0.75	0
16	**SLU 16**	1.3	1.5	0	0	0
17	**SLU 17**	1.3	1.5	0	1.5	0
18	**SLU 18**	1.3	1.5	1.05	1.5	0
19	**SLU 19**	1.3	1.5	1.5	0	0
20	**SLU 20**	1.3	1.5	1.5	0.75	0

Famiglia SLE rara

Il nome compatto della famiglia è SLE RA.

Nome	Nome breve	Pesi	Port.	Variabile A	neve	Dt
1	**SLE RA 1**	1	1	0	0	0
2	**SLE RA 2**	1	1	0	1	0
3	**SLE RA 3**	1	1	0.7	1	0
4	**SLE RA 4**	1	1	1	0	0
5	**SLE RA 5**	1	1	1	0.5	0

Famiglia SLE frequente

Il nome compatto della famiglia è SLE FR.

Nome	Nome breve	Pesi	Port.	Variabile A	neve	Dt
1	**SLE FR 1**	1	1	0	0	0
2	**SLE FR 2**	1	1	0	0.2	0
3	**SLE FR 3**	1	1	0.3	0.2	0
4	**SLE FR 4**	1	1	0.5	0	0

Famiglia SLE quasi permanente

Il nome compatto della famiglia è SLE QP.

Nome	Nome breve	Pesi	Port.	Variabile A	neve	Dt
1	**SLE QP 1**	1	1	0	0	0
2	**SLE QP 2**	1	1	0.3	0	0

Famiglia SLU eccezionale

Il nome compatto della famiglia è SLU EX.

Nome	Nome breve	Pesi	Port.	Variabile A	neve	Dt

Famiglia SLD

Il nome compatto della famiglia è SLD.

Poiché il numero di condizioni elementari previste per le combinazioni di questa famiglia è cospicuo, la tabella verrà spezzata in più parti.

Nome	Nome breve	Pesi	Port.	Variabile A	neve	Dt	X SLD
1	**SLD 1**	1	1	0.3	0	0	-1
2	**SLD 2**	1	1	0.3	0	0	-1
3	**SLD 3**	1	1	0.3	0	0	-1
4	**SLD 4**	1	1	0.3	0	0	-1

Nome	Nome breve	Pesi	Port.	Variabile A	neve	Dt	X SLD
5	SLD 5	1	1	0.3	0	0	-0.3
6	SLD 6	1	1	0.3	0	0	-0.3
7	SLD 7	1	1	0.3	0	0	-0.3
8	SLD 8	1	1	0.3	0	0	-0.3
9	SLD 9	1	1	0.3	0	0	0.3
10	SLD 10	1	1	0.3	0	0	0.3
11	SLD 11	1	1	0.3	0	0	0.3
12	SLD 12	1	1	0.3	0	0	0.3
13	SLD 13	1	1	0.3	0	0	1
14	SLD 14	1	1	0.3	0	0	1
15	SLD 15	1	1	0.3	0	0	1
16	SLD 16	1	1	0.3	0	0	1

Nome	Nome breve	Y SLD	Z SLD	EY SLD	EX SLD	Tr x SLD	Tr y SLD
1	SLD 1	-0.3	0	-1	0.3	-1	-0.3
2	SLD 2	-0.3	0	1	-0.3	-1	-0.3
3	SLD 3	0.3	0	-1	0.3	-1	0.3
4	SLD 4	0.3	0	1	-0.3	-1	0.3
5	SLD 5	-1	0	-0.3	1	-0.3	-1
6	SLD 6	-1	0	0.3	-1	-0.3	-1
7	SLD 7	1	0	-0.3	1	-0.3	1
8	SLD 8	1	0	0.3	-1	-0.3	1
9	SLD 9	-1	0	-0.3	1	0.3	-1
10	SLD 10	-1	0	0.3	-1	0.3	-1
11	SLD 11	1	0	-0.3	1	0.3	1
12	SLD 12	1	0	0.3	-1	0.3	1
13	SLD 13	-0.3	0	-1	0.3	1	-0.3
14	SLD 14	-0.3	0	1	-0.3	1	-0.3
15	SLD 15	0.3	0	-1	0.3	1	0.3
16	SLD 16	0.3	0	1	-0.3	1	0.3

Famiglia SLV

Il nome compatto della famiglia è SLV.

Poiché il numero di condizioni elementari previste per le combinazioni di questa famiglia è cospicuo, la tabella verrà spezzata in più parti.

Nome	Nome breve	Pesi	Port.	Variabile A	neve	Dt	X SLV
1	SLV 1	1	1	0.3	0	0	-1
2	SLV 2	1	1	0.3	0	0	-1
3	SLV 3	1	1	0.3	0	0	-1
4	SLV 4	1	1	0.3	0	0	-1
5	SLV 5	1	1	0.3	0	0	-0.3
6	SLV 6	1	1	0.3	0	0	-0.3
7	SLV 7	1	1	0.3	0	0	-0.3
8	SLV 8	1	1	0.3	0	0	-0.3
9	SLV 9	1	1	0.3	0	0	0.3
10	SLV 10	1	1	0.3	0	0	0.3
11	SLV 11	1	1	0.3	0	0	0.3
12	SLV 12	1	1	0.3	0	0	0.3
13	SLV 13	1	1	0.3	0	0	1
14	SLV 14	1	1	0.3	0	0	1
15	SLV 15	1	1	0.3	0	0	1
16	SLV 16	1	1	0.3	0	0	1

Nome	Nome breve	Y SLV	Z SLV	EY SLV	EX SLV	Tr x SLV	Tr y SLV
1	SLV 1	-0.3	0	-1	0.3	-1	-0.3
2	SLV 2	-0.3	0	1	-0.3	-1	-0.3
3	SLV 3	0.3	0	-1	0.3	-1	0.3
4	SLV 4	0.3	0	1	-0.3	-1	0.3
5	SLV 5	-1	0	-0.3	1	-0.3	-1
6	SLV 6	-1	0	0.3	-1	-0.3	-1
7	SLV 7	1	0	-0.3	1	-0.3	1
8	SLV 8	1	0	0.3	-1	-0.3	1
9	SLV 9	-1	0	-0.3	1	0.3	-1
10	SLV 10	-1	0	0.3	-1	0.3	-1
11	SLV 11	1	0	-0.3	1	0.3	1
12	SLV 12	1	0	0.3	-1	0.3	1
13	SLV 13	-0.3	0	-1	0.3	1	-0.3
14	SLV 14	-0.3	0	1	-0.3	1	-0.3
15	SLV 15	0.3	0	-1	0.3	1	0.3
16	SLV 16	0.3	0	1	-0.3	1	0.3

Famiglia SLV fondazioni

Il nome compatto della famiglia è SLV FO.

Poiché il numero di condizioni elementari previste per le combinazioni di questa famiglia è cospicuo, la tabella verrà spezzata in più parti.

Nome	Nome breve	Pesi	Port.	Variabile A	neve	Dt	X SLV
1	SLV FO 1	1	1	0.3	0	0	-1.1
2	SLV FO 2	1	1	0.3	0	0	-1.1
3	SLV FO 3	1	1	0.3	0	0	-1.1
4	SLV FO 4	1	1	0.3	0	0	-1.1
5	SLV FO 5	1	1	0.3	0	0	-0.33
6	SLV FO 6	1	1	0.3	0	0	-0.33
7	SLV FO 7	1	1	0.3	0	0	-0.33
8	SLV FO 8	1	1	0.3	0	0	-0.33
9	SLV FO 9	1	1	0.3	0	0	0.33
10	SLV FO 10	1	1	0.3	0	0	0.33
11	SLV FO 11	1	1	0.3	0	0	0.33
12	SLV FO 12	1	1	0.3	0	0	0.33
13	SLV FO 13	1	1	0.3	0	0	1.1
14	SLV FO 14	1	1	0.3	0	0	1.1
15	SLV FO 15	1	1	0.3	0	0	1.1
16	SLV FO 16	1	1	0.3	0	0	1.1

Nome	Nome breve	Y SLV	Z SLV	EY SLV	EX SLV	Tr x SLV	Tr y SLV
1	SLV FO 1	-0.33	0	-1.1	0.33	-1.1	-0.33
2	SLV FO 2	-0.33	0	1.1	-0.33	-1.1	-0.33
3	SLV FO 3	0.33	0	-1.1	0.33	-1.1	0.33
4	SLV FO 4	0.33	0	1.1	-0.33	-1.1	0.33
5	SLV FO 5	-1.1	0	-0.33	1.1	-0.33	-1.1
6	SLV FO 6	-1.1	0	0.33	-1.1	-0.33	-1.1
7	SLV FO 7	1.1	0	-0.33	1.1	-0.33	1.1
8	SLV FO 8	1.1	0	0.33	-1.1	-0.33	1.1
9	SLV FO 9	-1.1	0	-0.33	1.1	0.33	-1.1
10	SLV FO 10	-1.1	0	0.33	-1.1	0.33	-1.1
11	SLV FO 11	1.1	0	-0.33	1.1	0.33	1.1
12	SLV FO 12	1.1	0	0.33	-1.1	0.33	1.1
13	SLV FO 13	-0.33	0	-1.1	0.33	1.1	-0.33
14	SLV FO 14	-0.33	0	1.1	-0.33	1.1	-0.33
15	SLV FO 15	0.33	0	-1.1	0.33	1.1	0.33
16	SLV FO 16	0.33	0	1.1	-0.33	1.1	0.33

Famiglia Calcolo rigidezza torsionale/flessionale di piano

Il nome compatto della famiglia è CRTFP.

Nome	Nome breve	R Ux	R Uy	R Rz
Rig. Ux+	CRTFP Ux+	1	0	0
Rig. Ux-	CRTFP Ux-	-1	0	0
Rig. Uy+	CRTFP Uy+	0	1	0
Rig. Uy-	CRTFP Uy-	0	-1	0
Rig. Rz+	CRTFP Rz+	0	0	1
Rig. Rz-	CRTFP Rz-	0	0	-1

6.2.3 Definizioni di carichi lineari

***Nome**: Nome identificativo della definizione di carico.*
***Valori**: Valori associati alle condizioni di carico.*
***Condizione**: Condizione di carico a cui sono associati i valori.*
***Descrizione**: Nome assegnato alla condizione elementare.*
***Fx i.**: Valore iniziale della forza, per unità di lunghezza, agente in direzione X. [daN/cm]*
***Fx f.**: Valore finale della forza, per unità di lunghezza, agente in direzione X. [daN/cm]*
***Fy i.**: Valore iniziale della forza, per unità di lunghezza, agente in direzione Y. [daN/cm]*
***Fy f.**: Valore finale della forza, per unità di lunghezza, agente in direzione Y. [daN/cm]*
***Fz i.**: Valore iniziale della forza, per unità di lunghezza, agente in direzione Z. [daN/cm]*
***Fz f.**: Valore finale della forza, per unità di lunghezza, agente in direzione Z. [daN/cm]*
***Mx i.**: Valore iniziale della coppia, per unità di lunghezza, agente attorno l'asse X. [daN]*
***Mx f.**: Valore finale della coppia, per unità di lunghezza, agente attorno l'asse X. [daN]*
***My i.**: Valore iniziale della coppia, per unità di lunghezza, agente attorno l'asse Y. [daN]*
***My f.**: Valore finale della coppia, per unità di lunghezza, agente attorno l'asse Y. [daN]*
***Mz i.**: Valore iniziale della coppia, per unità di lunghezza, agente attorno l'asse Z. [daN]*
***Mz f.**: Valore finale della coppia, per unità di lunghezza, agente attorno l'asse Z. [daN]*

Nome	Valori											
	Condizione	Fx i.	Fx f.	Fy i.	Fy f.	Fz i.	Fz f.	Mx i.	Mx f.	My i.	My f.	Mz i.	Mz f.
	Descrizione												
copertura	Pesi strutturali	0	0	0	0	0	0	0	0	0	0	0	0
	Permanenti portati	0	0	0	0	-2	-2	0	0	0	0	0	0
	Variabile A	0	0	0	0	0	0	0	0	0	0	0	0
	neve	0	0	0	0	0	0	0	0	0	0	0	0
balcone	Pesi strutturali	0	0	0	0	-4.5	-4.5	-300	-300	0	0	0	0
	Permanenti portati	0	0	0	0	-1.2	-1.2	-100	-100	0	0	0	0
	Variabile A	0	0	0	0	-4.8	-4.8	-290	-290	0	0	0	0
	neve	0	0	0	0	0	0	0	0	0	0	0	0
perc scarico impalcato	Pesi strutturali	0	0	0	0	-10	-10	0	0	0	0	0	0
	Permanenti portati	0	0	0	0	0	0	0	0	0	0	0	0
	Variabile A	0	0	0	0	0	0	0	0	0	0	0	0
	neve	0	0	0	0	0	0	0	0	0	0	0	0

6.2.4 Definizioni di carichi superficiali

***Nome**: Nome identificativo della definizione di carico.*
***Valori**: Valori associati alle condizioni di carico.*
***Condizione**: Condizione di carico a cui sono associati i valori.*
***Descrizione**: Nome assegnato alla condizione elementare.*
***Valore**: Modulo del carico superficiale applicato alla superficie. [daN/cm2]*
***Applicazione**: Modalità con cui il carico è applicato alla superficie.*

Nome	Valori		
	Condizione	Valore	Applicazione
	Descrizione		
piano	Pesi strutturali	0.085	Verticale
	Permanenti portati	0.02	Verticale
	Variabile A	0.03	Verticale
	neve	0	Verticale
copertura1	Pesi strutturali	0.055	Verticale
	Permanenti portati	0.0075	Verticale
	Variabile A	0.01	Verticale
	neve	0.005	Verticale
copertura	Pesi strutturali	0.11	Verticale
	Permanenti portati	0.015	Verticale
	Variabile A	0.02	Verticale

Nome	Valori		
	Condizione	Valore	Applicazione
	Descrizione		
	neve	0.01	Verticale

6.3 Quote

6.3.1 Livelli

***Descrizione breve**: Nome sintetico assegnato al livello.*
***Descrizione**: Nome assegnato al livello.*
***Quota**: Quota superiore espressa nel sistema di riferimento assoluto. [cm]*
***Spessore**: Spessore del livello. [cm]*

Descrizione breve	Descrizione	Quota	Spessore
L1	Fondazione	0	100
L2	Piano 1	500	100
L3	copertura	1060	100

6.3.2 Tronchi

***Descrizione breve**: Nome sintetico assegnato al tronco.*
***Descrizione**: Nome assegnato al tronco.*
***Quota 1**: Riferimento della prima quota di definizione del tronco. esprimibile come livello, falda, piano orizzontale alla Z specificata. [cm]*
***Quota 2**: Riferimento della seconda quota di definizione del tronco. esprimibile come livello, falda, piano orizzontale alla Z specificata. [cm]*

Descrizione breve	Descrizione	Quota 1	Quota 2
T1	Fondazione - Piano 1	Fondazione	Piano 1
T2	Piano 1 - copertura	Piano 1	copertura

6.4 Elementi di input

6.4.1 Fili fissi

6.4.1.1 Fili fissi di piano

***Livello**: Quota di inserimento espressa con notazione breve esprimibile come livello, falda, piano orizzontale alla Z specificata. [cm]*
***Punto**: Punto di inserimento.*
* ***X**: Coordinata X. [cm]*
* ***Y**: Coordinata Y. [cm]*
***Estradosso**: Distanza dalla quota di inserimento misurata in direzione ortogonale al piano della quota e con verso positivo verso l'alto. [cm]*
***Angolo**: Angolo misurato dal semiasse positivo delle ascisse in verso antiorario. [deg]*
***Tipo**: Tipo di simbolo.*
***T.c.**: Testo completo visualizzato accanto al filo fisso, costituito dalla concatenazione del prefisso e del testo.*

Livello	Punto		Estradosso	Angolo	Tipo	T.c.	Livello	Punto		Estradosso	Angolo	Tipo	T.c.
	X	Y						X	Y				
L1	1300	610	0	0	Croce	10	L1	1300	1070	0	0	Croce	11
L1	680	1070	0	0	Croce	7	L1	680	1565	0	0	Croce	8
L1	1890	1070	0	0	Croce	15	L1	1890	1565	0	0	Croce	16
L1	1300	1565	0	0	Croce	12	L1	1890	610	0	0	Croce	14
L1	1300	100	0	0	Croce	9	L1	1890	100	0	0	Croce	13
L1	100	100	0	0	Croce	1	L1	680	100	0	0	Croce	5
L1	100	1565	0	0	Croce	4	L1	680	610	0	0	Croce	6
L1	100	610	0	0	Croce	2	L1	100	1070	0	0	Croce	3

6.4.2 Pareti in muratura

***Tr.**: Riferimento al tronco indicante la quota inferiore e superiore.*
***Sp.**: Spessore misurato in direzione ortogonale al piano medio dell'elemento. [cm]*
***P.i.**: Posizione del punto di inserimento rispetto ad una sezione verticale, vista dal punto iniziale verso il punto finale.*
***Punto i.**: Punto iniziale in pianta.*
* ***X**: Coordinata X. [cm]*
* ***Y**: Coordinata Y. [cm]*
***Punto f.**: Punto finale in pianta.*
* ***X**: Coordinata X. [cm]*
* ***Y**: Coordinata Y. [cm]*
***Materiale**: Riferimento ad una definizione di materiale muratura.*
***Car.pot.**: Riferimento alla definizione di un carico potenziale. Accetta anche il valore "Nessuno".*
***DeltaT**: Riferimento alla definizione di una variazione termica. Accetta anche il valore "Nessuno".*
***Sovr.**: Aliquota di sovraresistenza da assicurare in verifica.*
***S.Z**: Indica se l'elemento deve essere verificato considerando il sisma verticale.*
***P.sup.**: Peso per unità di superficie. [daN/cm2]*
***Aperture**: Riferimenti a tutti gli elementi che forano la parete.*

Tr.	Sp.	P.i.	Punto i.		Punto f.		Materiale	Car.pot.	DeltaT	Sovr.	S.Z	P.sup.	Aperture
			X	Y	X	Y							
T1	100	Centro	1300	100	1300	610	Muratura in pietrame consolidata con iniezioni LC1			0	No	0.22	

Tr.	Sp.	P.i.	Punto i.		Punto f.		Materiale	Car.pot.	DeltaT	Sovr.	S.Z	P.sup.	Aperture
			X	Y	X	Y							
T1	85	Sinistra	100	100	100	610	Muratura in pietrame consolidata con iniezioni LC1			0	No	0.187	
T1	100	Centro	680	1070	680	1565	Muratura in pietrame consolidata con iniezioni LC1			0	No	0.22	
T1	100	Centro	1300	610	1300	1070	Muratura in pietrame consolidata con iniezioni LC1			0	No	0.22	
T1	100	Centro	680	610	680	1070	Muratura in pietrame consolidata con iniezioni LC1			0	No	0.22	W15
T1	100	Centro	1300	1070	1300	1565	Muratura in pietrame consolidata con iniezioni LC1			0	No	0.22	W16
T1	45	Centro	100	1070	680	1070	Muratura in pietrame consolidata con iniezioni LC1			0	No	0.099	W20
T1	45	Centro	100	610	680	610	Muratura in pietrame consolidata con iniezioni LC1			0	No	0.099	W17
T1	45	Centro	1300	610	1890	610	Muratura in pietrame consolidata con iniezioni LC1			0	No	0.099	W19
T1	100	Centro	680	100	680	610	Muratura in pietrame consolidata con iniezioni LC1			0	No	0.22	
T1	45	Centro	680	610	1300	610	Muratura in pietrame consolidata con iniezioni LC1			0	No	0.099	W18
T1	85	Sinistra	680	100	100	100	Muratura in pietrame consolidata con iniezioni LC1			0	No	0.187	W14
T1	85	Sinistra	100	1565	680	1565	Muratura in pietrame consolidata con iniezioni LC1			0	No	0.187	W4
T1	85	Sinistra	1300	100	680	100	Muratura in pietrame consolidata con iniezioni LC1			0	No	0.187	W12, W13
T1	85	Sinistra	100	1070	100	1565	Muratura in pietrame consolidata con iniezioni LC1			0	No	0.187	W3
T1	85	Sinistra	680	1565	1300	1565	Muratura in pietrame consolidata con iniezioni LC1			0	No	0.187	W5
T1	85	Sinistra	100	610	100	1070	Muratura in pietrame consolidata con iniezioni LC1			0	No	0.187	W1, W2
T1	85	Sinistra	1300	1565	1890	1565	Muratura in pietrame consolidata con iniezioni LC1			0	No	0.187	W6
T1	85	Sinistra	1890	100	1300	100	Muratura in pietrame consolidata con iniezioni LC1			0	No	0.187	W11
T1	85	Sinistra	1890	1565	1890	1070	Muratura in pietrame consolidata con iniezioni LC1			0	No	0.187	W7
T1	85	Sinistra	1890	610	1890	100	Muratura in pietrame consolidata con iniezioni LC1			0	No	0.187	W10
T1	85	Sinistra	1890	1070	1890	610	Muratura in pietrame consolidata con iniezioni LC1			0	No	0.187	W8, W9
T1	45	Centro	1300	1070	1890	1070	Muratura in pietrame consolidata con iniezioni LC1			0	No	0.099	W21
T2	70	Centro	680	610	680	1070	Muratura in pietrame consolidata con iniezioni LC1			0	No	0.154	W38
T2	70	Centro	1300	100	1300	610	Muratura in pietrame consolidata con iniezioni LC1			0	No	0.154	W40
T2	70	Centro	680	1070	680	1565	Muratura in pietrame consolidata con iniezioni LC1			0	No	0.154	W39
T2	45	Centro	1300	610	1890	610	Muratura in pietrame consolidata con iniezioni LC1			0	No	0.099	
T2	70	Centro	1300	610	1300	1070	Muratura in pietrame consolidata con iniezioni LC1			0	No	0.154	W41

Tr.	Sp.	P.i.	Punto i.		Punto f.		Materiale	Car.pot.	DeltaT	Sovr.	S.Z	P.sup.	Aperture
			X	Y	X	Y							
T2	70	Centro	1300	1070	1300	1565	Muratura in pietrame consolidata con iniezioni LC1			0	No	0.154	W42
T2	45	Centro	100	1070	680	1070	Muratura in pietrame consolidata con iniezioni LC1			0	No	0.099	W44
T2	45	Centro	100	610	680	610	Muratura in pietrame consolidata con iniezioni LC1			0	No	0.099	
T2	70	Centro	680	100	680	610	Muratura in pietrame consolidata con iniezioni LC1			0	No	0.154	W37
T2	70	Sinistra	1300	1565	1890	1565	Muratura in pietrame consolidata con iniezioni LC1			0	No	0.154	W29
T2	45	Centro	680	610	1300	610	Muratura in pietrame consolidata con iniezioni LC1			0	No	0.099	W43
T2	70	Sinistra	680	100	100	100	Muratura in pietrame consolidata con iniezioni LC1			0	No	0.154	W36
T2	70	Sinistra	100	1565	680	1565	Muratura in pietrame consolidata con iniezioni LC1			0	No	0.154	W26
T2	70	Sinistra	1300	100	680	100	Muratura in pietrame consolidata con iniezioni LC1			0	No	0.154	W34, W35
T2	70	Sinistra	100	1070	100	1565	Muratura in pietrame consolidata con iniezioni LC1			0	No	0.154	W25
T2	70	Sinistra	680	1565	1300	1565	Muratura in pietrame consolidata con iniezioni LC1			0	No	0.154	W27, W28
T2	70	Sinistra	100	610	100	1070	Muratura in pietrame consolidata con iniezioni LC1			0	No	0.154	W24
T2	45	Centro	1300	1070	1890	1070	Muratura in pietrame consolidata con iniezioni LC1			0	No	0.099	
T2	70	Sinistra	1890	100	1300	100	Muratura in pietrame consolidata con iniezioni LC1			0	No	0.154	W33
T2	70	Sinistra	1890	1565	1890	1070	Muratura in pietrame consolidata con iniezioni LC1			0	No	0.154	W30
T2	70	Sinistra	1890	610	1890	100	Muratura in pietrame consolidata con iniezioni LC1			0	No	0.154	W32
T2	70	Sinistra	100	100	100	610	Muratura in pietrame consolidata con iniezioni LC1			0	No	0.154	W22, W23
T2	70	Sinistra	1890	1070	1890	610	Muratura in pietrame consolidata con iniezioni LC1			0	No	0.154	W31

6.4.3 Aperture su pareti

***Desc.**: Descrizione breve dell'apertura utilizzata dalle pareti.*
***Tr.**: Riferimento al tronco indicante la quota inferiore e superiore.*
***Sp.**: Spessore misurato in direzione ortogonale al piano medio dell'elemento. [cm]*
***P.i.**: Posizione del punto di inserimento rispetto ad una sezione verticale, vista dal punto iniziale verso il punto finale.*
***Porta**: Apertura fino al pavimento o presenza della chiusura inferiore.*
***Architrave**: Presenza della chiusura superiore o apertura fino al soffitto.*
***Larghezza**: Larghezza della finestra. [cm]*
***Altezza**: Altezza della finestra. [cm]*
***Dist.inf.**: Distanza dalla quota inferiore. [cm]*
***Dist.lat.**: Distanza dal punto di riferimento. [cm]*
***Punto di rif.**: Primo punto di riferimento in pianta.*
- ***X**: Coordinata X. [cm]*
- ***Y**: Coordinata Y. [cm]*

***Punto di dir.**: Secondo punto in pianta che, in coppia col punto di riferimento, definisce la direzione e quindi il piano verticale su cui giace l'apertura.*
- ***X**: Coordinata X. [cm]*
- ***Y**: Coordinata Y. [cm]*

Desc.	Tr.	Sp.	P.i.	Porta	Architrave	Larghezza	Altezza	Dist.inf.	Dist.lat.	Punto di rif.		Punto di dir.	
										X	Y	X	Y
W16	T1	100	Centro	Si	Si	100	250		95	1300	1070	1300	1565
W18	T1	45	Centro	Si	Si	120	250		220	680	610	1300	610
W4	T1	85	Sinistra	No	Si	120	150	100	120	100	1565	680	1565

Desc.	Tr.	Sp.	P.i.	Porta	Architrave	Larghezza	Altezza	Dist.inf.	Dist.lat.	Punto di rif.		Punto di dir.	
										X	Y	X	Y
W14	T1	85	Sinistra	No	Si	150	150	100	290	680	100	100	100
W5	T1	85	Sinistra	Si	Si	120	250		220	680	1565	1300	1565
W19	T1	45	Centro	Si	Si	120	250		350	1300	610	1890	610
W17	T1	45	Centro	Si	Si	100	250		140	100	610	680	610
W21	T1	45	Centro	Si	Si	120	250		350	1300	1070	1890	1070
W6	T1	85	Sinistra	Si	Si	120	250		350	1300	1565	1890	1565
W20	T1	45	Centro	Si	Si	100	250		140	100	1070	680	1070
W3	T1	85	Sinistra	No	Si	120	150	100	245	100	1070	100	1565
W11	T1	85	Sinistra	No	Si	120	150	100	120	1890	100	1300	100
W15	T1	100	Centro	Si	Si	100	250		95	680	610	680	1070
W2	T1	85	Sinistra	No	Si	100	150	100	285	100	610	100	1070
W7	T1	85	Sinistra	No	Si	120	150	100	120	1890	1565	1890	1070
W12	T1	85	Sinistra	Si	Si	120	250		400	1300	100	680	100
W1	T1	85	Sinistra	No	Si	110	150	100	45	100	610	100	1070
W8	T1	85	Sinistra	No	Si	120	150	100	50	1890	1070	1890	610
W10	T1	85	Sinistra	No	Si	120	150	100	250	1890	610	1890	100
W9	T1	85	Sinistra	Si	Si	120	250		280	1890	1070	1890	610
W13	T1	85	Sinistra	No	Si	120	150	100	80	1300	100	680	100
W44	T2	45	Centro	Si	Si	100	150		140	100	1070	680	1070
W39	T2	70	Centro	Si	Si	116.6	250		258.4	680	1070	680	1565
W33	T2	70	Sinistra	No	Si	120	150	100	120	1890	100	1300	100
W35	T2	70	Sinistra	No	Si	120	150	100	80	1300	100	680	100
W37	T2	70	Centro	Si	Si	120	250		140	680	100	680	610
W40	T2	70	Centro	Si	Si	120	250		140	1300	100	1300	610
W34	T2	70	Sinistra	Si	Si	120	250		400	1300	100	680	100
W41	T2	70	Centro	Si	Si	150	250		270	1300	610	1300	1070
W38	T2	70	Centro	Si	Si	150	250		270	680	610	680	1070
W43	T2	45	Centro	Si	Si	120	250		220	680	610	1300	610
W28	T2	70	Sinistra	Si	Si	100	250		430	680	1565	1300	1565
W36	T2	70	Sinistra	No	Si	150	150	100	290	680	100	100	100
W30	T2	70	Sinistra	No	Si	120	150	100	120	1890	1565	1890	1070
W29	T2	70	Sinistra	No	Si	100	150	100	340	1300	1565	1890	1565
W26	T2	70	Sinistra	No	Si	100	150	100	120	100	1565	680	1565
W42	T2	70	Centro	Si	Si	116.6	250		258.4	1300	1070	1300	1565
W32	T2	70	Sinistra	No	Si	120	150	100	250	1890	610	1890	100
W31	T2	70	Sinistra	No	Si	140	150	100	60	1890	1070	1890	610
W24	T2	70	Sinistra	No	Si	150	150	100	270	100	610	100	1070
W23	T2	70	Sinistra	No	Si	100	150	100	360	100	100	100	610
W25	T2	70	Sinistra	No	Si	120	150	100	255	100	1070	100	1565
W22	T2	70	Sinistra	No	Si	120	150	100	140	100	100	100	610
W27	T2	70	Sinistra	Si	Si	100	250		60	680	1565	1300	1565

6.4.4 Carichi lineari

6.4.4.1 Carichi lineari di piano

***Carico**: Riferimento alla definizione di un carico lineare.*
***Livello**: Quota del punto di inserimento iniziale. esprimibile come livello, falda, piano orizzontale alla Z specificata. [cm]*
***Punto i.**: Punto di inserimento iniziale.*
* ***X**: Coordinata X. [cm]*
* ***Y**: Coordinata Y. [cm]*
***Punto f.**: Punto di inserimento finale.*
* ***X**: Coordinata X. [cm]*
* ***Y**: Coordinata Y. [cm]*
***Estr.**: Distanza dalla quota di inserimento misurata in direzione ortogonale al piano della quota e con verso positivo verso l'alto. [cm]*

Carico	Livello	Punto i.		Punto f.		Estr.
		X	Y	X	Y	
balcone	Piano 1	680	1565	1300	1565	0
perc scarico impalcato	copertura	1300	100	1890	100	0
copertura	copertura	100	100	1300	100	0
copertura	copertura	100	1565	1300	1565	0
copertura	copertura	100	100	100	1565	0
copertura	copertura	1890	1565	1890	100	0
perc scarico impalcato	copertura	1300	1565	1890	1565	0

6.4.5 Carichi superficiali

6.4.5.1 Carichi superficiali di piano

***Carico**: Riferimento alla definizione di un carico di superficie.*
***Solaio**: Riferimento alla definizione di una sezione di solaio. Accetta anche il valore "Nessuno".*
***Liv.**: Quota di inserimento espressa con notazione breve esprimibile come livello, falda, piano orizzontale alla Z specificata. [cm]*
***Punti**: Punti di definizione in pianta.*
* ***Indice**: Indice del punto corrente nell'insieme dei punti di definizione dell'elemento.*
* ***X**: Coordinata X. [cm]*
* ***Y**: Coordinata Y. [cm]*
***Estr.**: Distanza dalla quota di inserimento misurata in direzione ortogonale al piano della quota e con verso positivo verso l'alto. [cm]*
***Angolo**: Direzione delle nervature che trasmettono il carico.Angolo misurato dal semiasse positivo delle ascisse in verso antiorario. [deg]*
***Comp.**: Descrizione sintetica del comportamento del carico superficiale o, nel caso di comportamento membranale, riferimento alla decrizione analitica della membrana.*
***Fori**: Riferimenti a tutti gli elementi che forano il carico superficiale.*

Carico	Solaio	Liv.	Punti			Estr.	Angolo	Comp.	Fori
			Indice	X	Y				
piano		L2	1	100	100	0	0	Rigido	
			2	1890	100				
			3	1890	1565				
			4	100	1565				
copertura		L3	1	1300	100	0	0	Rigido	
			2	1890	100				
			3	1890	1565				
			4	1300	1565				

muratura

Carico	Solaio	Liv.	Punti			Estr.	Angolo	Comp.	Fori
			Indice	X	Y				
copertura1		L3	1	100	100	0	0	Rigido	
			2	1300	100				
			3	1300	1565				
			4	100	1565				
copertura1		L3	1	1300	100	0	90	Rigido	
			2	1300	1565				
			3	100	1565				
			4	100	100				

1 Dati di modellazione

1.1 Carichi concentrati sismici

***Indice**: Numero dell'elemento nell'insieme che lo contiene.*
***Nodo**: Nodo su cui agisce il carico.*
***Condizione**: Condizione elementare mappata nella quale agisce il carico.*
***Fx**: Componente della forza lungo l'asse X. [daN]*
***Fy**: Componente della forza lungo l'asse Y. [daN]*
***Fz**: Componente della forza lungo l'asse Z. [daN]*
***Mz**: Componente del momento attorno all'asse Z. [daN*cm]*
***Peso**: Peso sismico. [daN]*
***Gamma**: Coefficiente gamma. Il valore è adimensionale.*

Indice	Nodo	Condizione	Fx	Fy	Fz	Mz	Peso	Gamma	Indice	Nodo	Condizione	Fx	Fy	Fz	Mz	Peso	Gamma
1583	689	Sisma X SLV	0.1	0	0	0	2.0E2	0.003	1584	689	Sisma Y SLV	0	0.1	0	0	2.0E2	0.003
1585	689	Sisma X SLD	0.1	0	0	0	2.0E2	0.003	1586	689	Sisma Y SLD	0	0.1	0	0	2.0E2	0.003
1587	690	Sisma X SLV	0.1	0	0	0	1.6E2	0.003	1588	690	Sisma Y SLV	0	0.1	0	0	1.6E2	0.003
1589	690	Sisma X SLD	0.1	0	0	0	1.6E2	0.003	1590	690	Sisma Y SLD	0	0.1	0	0	1.6E2	0.003
1591	691	Sisma X SLV	0.1	0	0	0	1.7E2	0.004	1592	691	Sisma Y SLV	0	0.1	0	0	1.7E2	0.004
1593	691	Sisma X SLD	0.1	0	0	0	1.7E2	0.004	1594	691	Sisma Y SLD	0	0.1	0	0	1.7E2	0.004
1595	692	Sisma X SLV	0.1	0	0	0	1.3E2	0.006	1596	692	Sisma Y SLV	0	0.1	0	0	1.3E2	0.006
1597	692	Sisma X SLD	0.1	0	0	0	1.3E2	0.006	1598	692	Sisma Y SLD	0	0.1	0	0	1.3E2	0.006
1599	693	Sisma X SLV	0.2	0	0	0	90.143	0.011	1600	693	Sisma Y SLV	0	0.2	0	0	90.143	0.011
1601	693	Sisma X SLD	0.2	0	0	0	90.143	0.011	1602	693	Sisma Y SLD	0	0.2	0	0	90.143	0.011
1603	694	Sisma X SLV	0.3	0	0	0	1.5E2	0.013	1604	694	Sisma Y SLV	0	0.3	0	0	1.5E2	0.013
1605	694	Sisma X SLD	0.3	0	0	0	1.5E2	0.013	1606	694	Sisma Y SLD	0	0.3	0	0	1.5E2	0.013
1607	695	Sisma X SLV	0.4	0	0	0	1.2E2	0.02	1608	695	Sisma Y SLV	0	0.4	0	0	1.2E2	0.02
1609	695	Sisma X SLD	0.4	0	0	0	1.2E2	0.02	1610	695	Sisma Y SLD	0	0.4	0	0	1.2E2	0.02
1611	696	Sisma X SLV	0.4	0	0	0	1.3E2	0.021	1612	696	Sisma Y SLV	0	0.4	0	0	1.3E2	0.021
1613	696	Sisma X SLD	0.4	0	0	0	1.3E2	0.021	1614	696	Sisma Y SLD	0	0.4	0	0	1.3E2	0.021
1615	697	Sisma X SLV	0.3	0	0	0	96.545	0.021	1616	697	Sisma Y SLV	0	0.3	0	0	96.545	0.021
1617	697	Sisma X SLD	0.3	0	0	0	96.545	0.021	1618	697	Sisma Y SLD	0	0.3	0	0	96.545	0.021
1619	698	Sisma X SLV	0.5	0	0	0	1.2E2	0.025	1620	698	Sisma Y SLV	0	0.5	0	0	1.2E2	0.025
1621	698	Sisma X SLD	0.5	0	0	0	1.2E2	0.025	1622	698	Sisma Y SLD	0	0.5	0	0	1.2E2	0.025
1623	699	Sisma X SLV	0.3	0	0	0	66.683	0.026	1624	699	Sisma Y SLV	0	0.3	0	0	66.683	0.026
1625	699	Sisma X SLD	0.3	0	0	0	66.683	0.026	1626	699	Sisma Y SLD	0	0.3	0	0	66.683	0.026
1627	700	Sisma X SLV	0.6	0	0	0	1.2E2	0.027	1628	700	Sisma Y SLV	0	0.6	0	0	1.2E2	0.027
1629	700	Sisma X SLD	0.5	0	0	0	1.2E2	0.027	1630	700	Sisma Y SLD	0	0.5	0	0	1.2E2	0.027
1631	701	Sisma X SLV	0.5	0	0	0	1.0E2	0.028	1632	701	Sisma Y SLV	0	0.5	0	0	1.0E2	0.028
1633	701	Sisma X SLD	0.5	0	0	0	1.0E2	0.028	1634	701	Sisma Y SLD	0	0.5	0	0	1.0E2	0.028
1635	702	Sisma X SLV	0.4	0	0	0	73.358	0.036	1636	702	Sisma Y SLV	0	0.4	0	0	73.358	0.036
1637	702	Sisma X SLD	0.4	0	0	0	73.358	0.036	1638	702	Sisma Y SLD	0	0.4	0	0	73.358	0.036
1639	703	Sisma X SLV	2.6	0	0	0	3.4E2	0.044	1640	703	Sisma Y SLV	0	2.6	0	0	3.4E2	0.044
1641	703	Sisma X SLD	2.5	0	0	0	3.4E2	0.044	1642	703	Sisma Y SLD	0	2.5	0	0	3.4E2	0.044
1643	704	Sisma X SLV	2.4	0	0	0	3.2E2	0.044	1644	704	Sisma Y SLV	0	2.4	0	0	3.2E2	0.044
1645	704	Sisma X SLD	2.3	0	0	0	3.2E2	0.044	1646	704	Sisma Y SLD	0	2.3	0	0	3.2E2	0.044
1647	705	Sisma X SLV	1.6	0	0	0	2.1E2	0.044	1648	705	Sisma Y SLV	0	1.6	0	0	2.1E2	0.044
1649	705	Sisma X SLD	1.6	0	0	0	2.1E2	0.044	1650	705	Sisma Y SLD	0	1.6	0	0	2.1E2	0.044
1651	706	Sisma X SLV	0.8	0	0	0	1.1E2	0.044	1652	706	Sisma Y SLV	0	0.8	0	0	1.1E2	0.044
1653	706	Sisma X SLD	0.8	0	0	0	1.1E2	0.044	1654	706	Sisma Y SLD	0	0.8	0	0	1.1E2	0.044
1655	707	Sisma X SLV	2.8	0	0	0	3.6E2	0.044	1656	707	Sisma Y SLV	0	2.8	0	0	3.6E2	0.044
1657	707	Sisma X SLD	2.7	0	0	0	3.6E2	0.044	1658	707	Sisma Y SLD	0	2.7	0	0	3.6E2	0.044
1659	708	Sisma X SLV	2.2	0	0	0	2.9E2	0.044	1660	708	Sisma Y SLV	0	2.2	0	0	2.9E2	0.044
1661	708	Sisma X SLD	2.1	0	0	0	2.9E2	0.044	1662	708	Sisma Y SLD	0	2.1	0	0	2.9E2	0.044
1663	709	Sisma X SLV	2.1	0	0	0	2.8E2	0.044	1664	709	Sisma Y SLV	0	2.1	0	0	2.8E2	0.044
1665	709	Sisma X SLD	2.1	0	0	0	2.8E2	0.044	1666	709	Sisma Y SLD	0	2.1	0	0	2.8E2	0.044
1667	710	Sisma X SLV	2.1	0	0	0	2.8E2	0.044	1668	710	Sisma Y SLV	0	2.1	0	0	2.8E2	0.044
1669	710	Sisma X SLD	2.1	0	0	0	2.8E2	0.044	1670	710	Sisma Y SLD	0	2.1	0	0	2.8E2	0.044
1671	711	Sisma X SLV	2.2	0	0	0	2.9E2	0.044	1672	711	Sisma Y SLV	0	2.2	0	0	2.9E2	0.044
1673	711	Sisma X SLD	2.2	0	0	0	2.9E2	0.044	1674	711	Sisma Y SLD	0	2.2	0	0	2.9E2	0.044
1675	712	Sisma X SLV	2.2	0	0	0	3.0E2	0.044	1676	712	Sisma Y SLV	0	2.2	0	0	3.0E2	0.044
1677	712	Sisma X SLD	2.2	0	0	0	3.0E2	0.044	1678	712	Sisma Y SLD	0	2.2	0	0	3.0E2	0.044
1679	713	Sisma X SLV	2.3	0	0	0	3.0E2	0.044	1680	713	Sisma Y SLV	0	2.3	0	0	3.0E2	0.044
1681	713	Sisma X SLD	2.2	0	0	0	3.0E2	0.044	1682	713	Sisma Y SLD	0	2.2	0	0	3.0E2	0.044
1683	714	Sisma X SLV	2.1	0	0	0	2.7E2	0.044	1684	714	Sisma Y SLV	0	2.1	0	0	2.7E2	0.044
1685	714	Sisma X SLD	2	0	0	0	2.7E2	0.044	1686	714	Sisma Y SLD	0	2	0	0	2.7E2	0.044
1687	715	Sisma X SLV	2.1	0	0	0	2.7E2	0.044	1688	715	Sisma Y SLV	0	2.1	0	0	2.7E2	0.044
1689	715	Sisma X SLD	2	0	0	0	2.7E2	0.044	1690	715	Sisma Y SLD	0	2	0	0	2.7E2	0.044
1691	716	Sisma X SLV	2.2	0	0	0	2.9E2	0.044	1692	716	Sisma Y SLV	0	2.2	0	0	2.9E2	0.044
1693	716	Sisma X SLD	2.2	0	0	0	2.9E2	0.044	1694	716	Sisma Y SLD	0	2.2	0	0	2.9E2	0.044
1695	717	Sisma X SLV	2.3	0	0	0	3.0E2	0.044	1696	717	Sisma Y SLV	0	2.3	0	0	3.0E2	0.044
1697	717	Sisma X SLD	2.3	0	0	0	3.0E2	0.044	1698	717	Sisma Y SLD	0	2.3	0	0	3.0E2	0.044
1699	718	Sisma X SLV	2.1	0	0	0	2.8E2	0.045	1700	718	Sisma Y SLV	0	2.1	0	0	2.8E2	0.045
1701	718	Sisma X SLD	2.1	0	0	0	2.8E2	0.045	1702	718	Sisma Y SLD	0	2.1	0	0	2.8E2	0.045
1703	719	Sisma X SLV	2.1	0	0	0	2.7E2	0.045	1704	719	Sisma Y SLV	0	2.1	0	0	2.7E2	0.045
1705	719	Sisma X SLD	2.1	0	0	0	2.7E2	0.045	1706	719	Sisma Y SLD	0	2.1	0	0	2.7E2	0.045
1707	720	Sisma X SLV	2.3	0	0	0	3.0E2	0.045	1708	720	Sisma Y SLV	0	2.3	0	0	3.0E2	0.045
1709	720	Sisma X SLD	2.3	0	0	0	3.0E2	0.045	1710	720	Sisma Y SLD	0	2.3	0	0	3.0E2	0.045
1711	721	Sisma X SLV	2.2	0	0	0	290.33	0.045	1712	721	Sisma Y SLV	0	2.2	0	0	290.33	0.045
1713	721	Sisma X SLD	2.2	0	0	0	290.33	0.045	1714	721	Sisma Y SLD	0	2.2	0	0	290.33	0.045
1715	722	Sisma X SLV	2.1	0	0	0	2.8E2	0.045	1716	722	Sisma Y SLV	0	2.1	0	0	2.8E2	0.045
1717	722	Sisma X SLD	2.1	0	0	0	2.8E2	0.045	1718	722	Sisma Y SLD	0	2.1	0	0	2.8E2	0.045
1719	723	Sisma X SLV	2.2	0	0	0	291.85	0.045	1720	723	Sisma Y SLV	0	2.2	0	0	291.85	0.045
1721	723	Sisma X SLD	2.2	0	0	0	291.85	0.045	1722	723	Sisma Y SLD	0	2.2	0	0	291.85	0.045
1723	724	Sisma X SLV	2.1	0	0	0	2.7E2	0.045	1724	724	Sisma Y SLV	0	2.1	0	0	2.7E2	0.045
1725	724	Sisma X SLD	2.1	0	0	0	2.7E2	0.045	1726	724	Sisma Y SLD	0	2.1	0	0	2.7E2	0.045
1727	725	Sisma X SLV	2.2	0	0	0	2.8E2	0.045	1728	725	Sisma Y SLV	0	2.2	0	0	2.8E2	0.045
1729	725	Sisma X SLD	2.1	0	0	0	2.8E2	0.045	1730	725	Sisma Y SLD	0	2.1	0	0	2.8E2	0.045
1731	726	Sisma X SLV	2.2	0	0	0	2.8E2	0.045	1732	726	Sisma Y SLV	0	2.2	0	0	2.8E2	0.045
1733	726	Sisma X SLD	2.1	0	0	0	2.8E2	0.045	1734	726	Sisma Y SLD	0	2.1	0	0	2.8E2	0.045
1735	727	Sisma X SLV	2.2	0	0	0	2.8E2	0.045	1736	727	Sisma Y SLV	0	2.2	0	0	2.8E2	0.045
1737	727	Sisma X SLD	2.1	0	0	0	2.8E2	0.045	1738	727	Sisma Y SLD	0	2.1	0	0	2.8E2	0.045
1739	728	Sisma X SLV	2.1	0	0	0	2.8E2	0.045	1740	728	Sisma Y SLV	0	2.1	0	0	2.8E2	0.045
1741	728	Sisma X SLD	2.1	0	0	0	2.8E2	0.045	1742	728	Sisma Y SLD	0	2.1	0	0	2.8E2	0.045
1743	729	Sisma X SLV	2.3	0	0	0	2.9E2	0.045	1744	729	Sisma Y SLV	0	2.3	0	0	2.9E2	0.045

Indice	Nodo	Condizione	Fx	Fy	Fz	Mz	Peso	Gamma	Indice	Nodo	Condizione	Fx	Fy	Fz	Mz	Peso	Gamma
1745	729	Sisma X SLD	2.2	0	0	0	2.9E2	0.045	1746	729	Sisma Y SLD	0	2.2	0	0	2.9E2	0.045
1747	730	Sisma X SLV	2.3	0	0	0	293.67	0.045	1748	730	Sisma Y SLV	0	2.3	0	0	293.67	0.045
1749	730	Sisma X SLD	2.2	0	0	0	293.67	0.045	1750	730	Sisma Y SLD	0	2.2	0	0	293.67	0.045
1751	731	Sisma X SLV	2.3	0	0	0	2.9E2	0.045	1752	731	Sisma Y SLV	0	2.3	0	0	2.9E2	0.045
1753	731	Sisma X SLD	2.2	0	0	0	2.9E2	0.045	1754	731	Sisma Y SLD	0	2.2	0	0	2.9E2	0.045
1755	732	Sisma X SLV	2.2	0	0	0	2.9E2	0.045	1756	732	Sisma Y SLV	0	2.2	0	0	2.9E2	0.045
1757	732	Sisma X SLD	2.2	0	0	0	2.9E2	0.045	1758	732	Sisma Y SLD	0	2.2	0	0	2.9E2	0.045
1759	733	Sisma X SLV	1.8	0	0	0	2.4E2	0.045	1760	733	Sisma Y SLV	0	1.8	0	0	2.4E2	0.045
1761	733	Sisma X SLD	1.8	0	0	0	2.4E2	0.045	1762	733	Sisma Y SLD	0	1.8	0	0	2.4E2	0.045
1763	734	Sisma X SLV	2.1	0	0	0	2.8E2	0.045	1764	734	Sisma Y SLV	0	2.1	0	0	2.8E2	0.045
1765	734	Sisma X SLD	2.1	0	0	0	2.8E2	0.045	1766	734	Sisma Y SLD	0	2.1	0	0	2.8E2	0.045
1767	735	Sisma X SLV	2.1	0	0	0	2.7E2	0.045	1768	735	Sisma Y SLV	0	2.1	0	0	2.7E2	0.045
1769	735	Sisma X SLD	2.1	0	0	0	2.7E2	0.045	1770	735	Sisma Y SLD	0	2.1	0	0	2.7E2	0.045
1771	736	Sisma X SLV	2.3	0	0	0	3.0E2	0.045	1772	736	Sisma Y SLV	0	2.3	0	0	3.0E2	0.045
1773	736	Sisma X SLD	2.3	0	0	0	3.0E2	0.045	1774	736	Sisma Y SLD	0	2.3	0	0	3.0E2	0.045
1775	737	Sisma X SLV	2.2	0	0	0	286.35	0.045	1776	737	Sisma Y SLV	0	2.2	0	0	286.35	0.045
1777	737	Sisma X SLD	2.2	0	0	0	286.35	0.045	1778	737	Sisma Y SLD	0	2.2	0	0	286.35	0.045
1779	738	Sisma X SLV	2.2	0	0	0	2.8E2	0.045	1780	738	Sisma Y SLV	0	2.2	0	0	2.8E2	0.045
1781	738	Sisma X SLD	2.1	0	0	0	2.8E2	0.045	1782	738	Sisma Y SLD	0	2.1	0	0	2.8E2	0.045
1783	739	Sisma X SLV	2.1	0	0	0	2.8E2	0.046	1784	739	Sisma Y SLV	0	2.1	0	0	2.8E2	0.046
1785	739	Sisma X SLD	2.1	0	0	0	2.8E2	0.046	1786	739	Sisma Y SLD	0	2.1	0	0	2.8E2	0.046
1787	740	Sisma X SLV	2.1	0	0	0	2.7E2	0.046	1788	740	Sisma Y SLV	0	2.1	0	0	2.7E2	0.046
1789	740	Sisma X SLD	2.1	0	0	0	2.7E2	0.046	1790	740	Sisma Y SLD	0	2.1	0	0	2.7E2	0.046
1791	741	Sisma X SLV	2.2	0	0	0	2.8E2	0.046	1792	741	Sisma Y SLV	0	2.2	0	0	2.8E2	0.046
1793	741	Sisma X SLD	2.2	0	0	0	2.8E2	0.046	1794	741	Sisma Y SLD	0	2.2	0	0	2.8E2	0.046
1795	742	Sisma X SLV	2.1	0	0	0	2.7E2	0.046	1796	742	Sisma Y SLV	0	2.1	0	0	2.7E2	0.046
1797	742	Sisma X SLD	2	0	0	0	2.7E2	0.046	1798	742	Sisma Y SLD	0	2	0	0	2.7E2	0.046
1799	743	Sisma X SLV	2.1	0	0	0	2.7E2	0.046	1800	743	Sisma Y SLV	0	2.1	0	0	2.7E2	0.046
1801	743	Sisma X SLD	2	0	0	0	2.7E2	0.046	1802	743	Sisma Y SLD	0	2	0	0	2.7E2	0.046
1803	744	Sisma X SLV	2.1	0	0	0	2.7E2	0.046	1804	744	Sisma Y SLV	0	2.1	0	0	2.7E2	0.046
1805	744	Sisma X SLD	2	0	0	0	2.7E2	0.046	1806	744	Sisma Y SLD	0	2	0	0	2.7E2	0.046
1807	745	Sisma X SLV	2.2	0	0	0	2.8E2	0.046	1808	745	Sisma Y SLV	0	2.2	0	0	2.8E2	0.046
1809	745	Sisma X SLD	2.2	0	0	0	2.8E2	0.046	1810	745	Sisma Y SLD	0	2.2	0	0	2.8E2	0.046
1811	746	Sisma X SLV	2.2	0	0	0	2.8E2	0.046	1812	746	Sisma Y SLV	0	2.2	0	0	2.8E2	0.046
1813	746	Sisma X SLD	2.1	0	0	0	2.8E2	0.046	1814	746	Sisma Y SLD	0	2.1	0	0	2.8E2	0.046
1815	747	Sisma X SLV	2.2	0	0	0	2.9E2	0.046	1816	747	Sisma Y SLV	0	2.2	0	0	2.9E2	0.046
1817	747	Sisma X SLD	2.2	0	0	0	2.9E2	0.046	1818	747	Sisma Y SLD	0	2.2	0	0	2.9E2	0.046
1819	748	Sisma X SLV	2.1	0	0	0	2.7E2	0.046	1820	748	Sisma Y SLV	0	2.1	0	0	2.7E2	0.046
1821	748	Sisma X SLD	2.1	0	0	0	2.7E2	0.046	1822	748	Sisma Y SLD	0	2.1	0	0	2.7E2	0.046
1823	749	Sisma X SLV	2.2	0	0	0	2.8E2	0.046	1824	749	Sisma Y SLV	0	2.2	0	0	2.8E2	0.046
1825	749	Sisma X SLD	2.1	0	0	0	2.8E2	0.046	1826	749	Sisma Y SLD	0	2.1	0	0	2.8E2	0.046
1827	750	Sisma X SLV	2.3	0	0	0	2.9E2	0.046	1828	750	Sisma Y SLV	0	2.3	0	0	2.9E2	0.046
1829	750	Sisma X SLD	2.2	0	0	0	2.9E2	0.046	1830	750	Sisma Y SLD	0	2.2	0	0	2.9E2	0.046
1831	751	Sisma X SLV	2.1	0	0	0	2.7E2	0.046	1832	751	Sisma Y SLV	0	2.1	0	0	2.7E2	0.046
1833	751	Sisma X SLD	2.1	0	0	0	2.7E2	0.046	1834	751	Sisma Y SLD	0	2.1	0	0	2.7E2	0.046
1835	752	Sisma X SLV	2.2	0	0	0	2.9E2	0.046	1836	752	Sisma Y SLV	0	2.2	0	0	2.9E2	0.046
1837	752	Sisma X SLD	2.2	0	0	0	2.9E2	0.046	1838	752	Sisma Y SLD	0	2.2	0	0	2.9E2	0.046
1839	753	Sisma X SLV	2.2	0	0	0	2.8E2	0.046	1840	753	Sisma Y SLV	0	2.2	0	0	2.8E2	0.046
1841	753	Sisma X SLD	2.1	0	0	0	2.8E2	0.046	1842	753	Sisma Y SLD	0	2.1	0	0	2.8E2	0.046
1843	754	Sisma X SLV	2.2	0	0	0	2.8E2	0.046	1844	754	Sisma Y SLV	0	2.2	0	0	2.8E2	0.046
1845	754	Sisma X SLD	2.2	0	0	0	2.8E2	0.046	1846	754	Sisma Y SLD	0	2.2	0	0	2.8E2	0.046
1847	755	Sisma X SLV	0.8	0	0	0	1.1E2	0.046	1848	755	Sisma Y SLV	0	0.8	0	0	1.1E2	0.046
1849	755	Sisma X SLD	0.8	0	0	0	1.1E2	0.046	1850	755	Sisma Y SLD	0	0.8	0	0	1.1E2	0.046
1851	756	Sisma X SLV	2.1	0	0	0	2.6E2	0.046	1852	756	Sisma Y SLV	0	2.1	0	0	2.6E2	0.046
1853	756	Sisma X SLD	2	0	0	0	2.6E2	0.046	1854	756	Sisma Y SLD	0	2	0	0	2.6E2	0.046
1855	757	Sisma X SLV	2.2	0	0	0	2.8E2	0.046	1856	757	Sisma Y SLV	0	2.2	0	0	2.8E2	0.046
1857	757	Sisma X SLD	2.1	0	0	0	2.8E2	0.046	1858	757	Sisma Y SLD	0	2.1	0	0	2.8E2	0.046
1859	758	Sisma X SLV	2.3	0	0	0	2.9E2	0.046	1860	758	Sisma Y SLV	0	2.3	0	0	2.9E2	0.046
1861	758	Sisma X SLD	2.2	0	0	0	2.9E2	0.046	1862	758	Sisma Y SLD	0	2.2	0	0	2.9E2	0.046
1863	759	Sisma X SLV	2.1	0	0	0	2.7E2	0.046	1864	759	Sisma Y SLV	0	2.1	0	0	2.7E2	0.046
1865	759	Sisma X SLD	2.1	0	0	0	2.7E2	0.046	1866	759	Sisma Y SLD	0	2.1	0	0	2.7E2	0.046
1867	760	Sisma X SLV	2.2	0	0	0	2.8E2	0.046	1868	760	Sisma Y SLV	0	2.2	0	0	2.8E2	0.046
1869	760	Sisma X SLD	2.1	0	0	0	2.8E2	0.046	1870	760	Sisma Y SLD	0	2.1	0	0	2.8E2	0.046
1871	761	Sisma X SLV	2.3	0	0	0	2.9E2	0.046	1872	761	Sisma Y SLV	0	2.3	0	0	2.9E2	0.046
1873	761	Sisma X SLD	2.3	0	0	0	2.9E2	0.046	1874	761	Sisma Y SLD	0	2.3	0	0	2.9E2	0.046
1875	762	Sisma X SLV	2.1	0	0	0	2.7E2	0.046	1876	762	Sisma Y SLV	0	2.1	0	0	2.7E2	0.046
1877	762	Sisma X SLD	2.1	0	0	0	2.7E2	0.046	1878	762	Sisma Y SLD	0	2.1	0	0	2.7E2	0.046
1879	763	Sisma X SLV	2.2	0	0	0	277.25	0.046	1880	763	Sisma Y SLV	0	2.2	0	0	277.25	0.046
1881	763	Sisma X SLD	2.1	0	0	0	277.25	0.046	1882	763	Sisma Y SLD	0	2.1	0	0	277.25	0.046
1883	764	Sisma X SLV	2.1	0	0	0	2.7E2	0.046	1884	764	Sisma Y SLV	0	2.1	0	0	2.7E2	0.046
1885	764	Sisma X SLD	2.1	0	0	0	2.7E2	0.046	1886	764	Sisma Y SLD	0	2.1	0	0	2.7E2	0.046
1887	765	Sisma X SLV	2.3	0	0	0	293.13	0.046	1888	765	Sisma Y SLV	0	2.3	0	0	293.13	0.046
1889	765	Sisma X SLD	2.3	0	0	0	293.13	0.046	1890	765	Sisma Y SLD	0	2.3	0	0	293.13	0.046
1891	766	Sisma X SLV	2.2	0	0	0	2.8E2	0.046	1892	766	Sisma Y SLV	0	2.2	0	0	2.8E2	0.046
1893	766	Sisma X SLD	2.2	0	0	0	2.8E2	0.046	1894	766	Sisma Y SLD	0	2.2	0	0	2.8E2	0.046
1895	767	Sisma X SLV	2.3	0	0	0	2.8E2	0.046	1896	767	Sisma Y SLV	0	2.3	0	0	2.8E2	0.046
1897	767	Sisma X SLD	2.2	0	0	0	2.8E2	0.046	1898	767	Sisma Y SLD	0	2.2	0	0	2.8E2	0.046
1899	768	Sisma X SLV	2.3	0	0	0	2.9E2	0.047	1900	768	Sisma Y SLV	0	2.3	0	0	2.9E2	0.047
1901	768	Sisma X SLD	2.2	0	0	0	2.9E2	0.047	1902	768	Sisma Y SLD	0	2.2	0	0	2.9E2	0.047
1903	769	Sisma X SLV	2.2	0	0	0	2.8E2	0.047	1904	769	Sisma Y SLV	0	2.2	0	0	2.8E2	0.047
1905	769	Sisma X SLD	2.2	0	0	0	2.8E2	0.047	1906	769	Sisma Y SLD	0	2.2	0	0	2.8E2	0.047
1907	770	Sisma X SLV	2.3	0	0	0	2.9E2	0.047	1908	770	Sisma Y SLV	0	2.3	0	0	2.9E2	0.047
1909	770	Sisma X SLD	2.3	0	0	0	2.9E2	0.047	1910	770	Sisma Y SLD	0	2.3	0	0	2.9E2	0.047
1911	771	Sisma X SLV	2.1	0	0	0	2.7E2	0.047	1912	771	Sisma Y SLV	0	2.1	0	0	2.7E2	0.047
1913	771	Sisma X SLD	2.1	0	0	0	2.7E2	0.047	1914	771	Sisma Y SLD	0	2.1	0	0	2.7E2	0.047
1915	772	Sisma X SLV	2.1	0	0	0	2.6E2	0.047	1916	772	Sisma Y SLV	0	2.1	0	0	2.6E2	0.047
1917	772	Sisma X SLD	2	0	0	0	2.6E2	0.047	1918	772	Sisma Y SLD	0	2	0	0	2.6E2	0.047
1919	773	Sisma X SLV	2.3	0	0	0	2.9E2	0.047	1920	773	Sisma Y SLV	0	2.3	0	0	2.9E2	0.047
1921	773	Sisma X SLD	2.3	0	0	0	2.9E2	0.047	1922	773	Sisma Y SLD	0	2.3	0	0	2.9E2	0.047
1923	774	Sisma X SLV	2.2	0	0	0	2.8E2	0.047	1924	774	Sisma Y SLV	0	2.2	0	0	2.8E2	0.047
1925	774	Sisma X SLD	2.2	0	0	0	2.8E2	0.047	1926	774	Sisma Y SLD	0	2.2	0	0	2.8E2	0.047
1927	775	Sisma X SLV	2.2	0	0	0	2.8E2	0.047	1928	775	Sisma Y SLV	0	2.2	0	0	2.8E2	0.047
1929	775	Sisma X SLD	2.2	0	0	0	2.8E2	0.047	1930	775	Sisma Y SLD	0	2.2	0	0	2.8E2	0.047
1931	776	Sisma X SLV	2.4	0	0	0	296.53	0.047	1932	776	Sisma Y SLV	0	2.4	0	0	296.53	0.047
1933	776	Sisma X SLD	2.3	0	0	0	296.53	0.047	1934	776	Sisma Y SLD	0	2.3	0	0	296.53	0.047
1935	777	Sisma X SLV	2.2	0	0	0	2.7E2	0.047	1936	777	Sisma Y SLV	0	2.2	0	0	2.7E2	0.047
1937	777	Sisma X SLD	2.2	0	0	0	2.7E2	0.047	1938	777	Sisma Y SLD	0	2.2	0	0	2.7E2	0.047
1939	778	Sisma X SLV	2.2	0	0	0	2.7E2	0.047	1940	778	Sisma Y SLV	0	2.2	0	0	2.7E2	0.047
1941	778	Sisma X SLD	2.1	0	0	0	2.7E2	0.047	1942	778	Sisma Y SLD	0	2.1	0	0	2.7E2	0.047
1943	779	Sisma X SLV	1	0	0	0	1.2E2	0.047	1944	779	Sisma Y SLV	0	1	0	0	1.2E2	0.047
1945	779	Sisma X SLD	1	0	0	0	1.2E2	0.047	1946	779	Sisma Y SLD	0	1	0	0	1.2E2	0.047
1947	780	Sisma X SLV	2.2	0	0	0	2.8E2	0.047	1948	780	Sisma Y SLV	0	2.2	0	0	2.8E2	0.047
1949	780	Sisma X SLD	2.2	0	0	0	2.8E2	0.047	1950	780	Sisma Y SLD	0	2.2	0	0	2.8E2	0.047
1951	781	Sisma X SLV	2.3	0	0	0	2.8E2	0.047	1952	781	Sisma Y SLV	0	2.3	0	0	2.8E2	0.047

muratura

Indice	Nodo	Condizione	Fx	Fy	Fz	Mz	Peso	Gamma	Indice	Nodo	Condizione	Fx	Fy	Fz	Mz	Peso	Gamma
1953	781	Sisma X SLD	2.2	0	0	0	2.8E2	0.047	1954	781	Sisma Y SLD	0	2.2	0	0	2.8E2	0.047
1955	782	Sisma X SLV	2.2	0	0	0	2.8E2	0.047	1956	782	Sisma Y SLV	0	2.2	0	0	2.8E2	0.047
1957	782	Sisma X SLD	2.2	0	0	0	2.8E2	0.047	1958	782	Sisma Y SLD	0	2.2	0	0	2.8E2	0.047
1959	783	Sisma X SLV	2.4	0	0	0	2.9E2	0.047	1960	783	Sisma Y SLV	0	2.4	0	0	2.9E2	0.047
1961	783	Sisma X SLD	2.3	0	0	0	2.9E2	0.047	1962	783	Sisma Y SLD	0	2.3	0	0	2.9E2	0.047
1963	784	Sisma X SLV	2.2	0	0	0	2.7E2	0.047	1964	784	Sisma Y SLV	0	2.2	0	0	2.7E2	0.047
1965	784	Sisma X SLD	2.2	0	0	0	2.7E2	0.047	1966	784	Sisma Y SLD	0	2.2	0	0	2.7E2	0.047
1967	785	Sisma X SLV	2.1	0	0	0	2.7E2	0.047	1968	785	Sisma Y SLV	0	2.1	0	0	2.7E2	0.047
1969	785	Sisma X SLD	2.1	0	0	0	2.7E2	0.047	1970	785	Sisma Y SLD	0	2.1	0	0	2.7E2	0.047
1971	786	Sisma X SLV	2.3	0	0	0	284.25	0.047	1972	786	Sisma Y SLV	0	2.3	0	0	284.25	0.047
1973	786	Sisma X SLD	2.3	0	0	0	284.25	0.047	1974	786	Sisma Y SLD	0	2.3	0	0	284.25	0.047
1975	787	Sisma X SLV	2.3	0	0	0	2.8E2	0.047	1976	787	Sisma Y SLV	0	2.3	0	0	2.8E2	0.047
1977	787	Sisma X SLD	2.2	0	0	0	2.8E2	0.047	1978	787	Sisma Y SLD	0	2.2	0	0	2.8E2	0.047
1979	788	Sisma X SLV	2.3	0	0	0	2.8E2	0.047	1980	788	Sisma Y SLV	0	2.3	0	0	2.8E2	0.047
1981	788	Sisma X SLD	2.2	0	0	0	2.8E2	0.047	1982	788	Sisma Y SLD	0	2.2	0	0	2.8E2	0.047
1983	789	Sisma X SLV	2.3	0	0	0	2.8E2	0.047	1984	789	Sisma Y SLV	0	2.3	0	0	2.8E2	0.047
1985	789	Sisma X SLD	2.2	0	0	0	2.8E2	0.047	1986	789	Sisma Y SLD	0	2.2	0	0	2.8E2	0.047
1987	790	Sisma X SLV	2.4	0	0	0	294.6	0.047	1988	790	Sisma Y SLV	0	2.4	0	0	294.6	0.047
1989	790	Sisma X SLD	2.3	0	0	0	294.6	0.047	1990	790	Sisma Y SLD	0	2.3	0	0	294.6	0.047
1991	791	Sisma X SLV	2.2	0	0	0	2.7E2	0.047	1992	791	Sisma Y SLV	0	2.2	0	0	2.7E2	0.047
1993	791	Sisma X SLD	2.2	0	0	0	2.7E2	0.047	1994	791	Sisma Y SLD	0	2.2	0	0	2.7E2	0.047
1995	792	Sisma X SLV	2.3	0	0	0	2.8E2	0.048	1996	792	Sisma Y SLV	0	2.3	0	0	2.8E2	0.048
1997	792	Sisma X SLD	2.2	0	0	0	2.8E2	0.048	1998	792	Sisma Y SLD	0	2.2	0	0	2.8E2	0.048
1999	793	Sisma X SLV	2.3	0	0	0	2.8E2	0.048	2000	793	Sisma Y SLV	0	2.3	0	0	2.8E2	0.048
2001	793	Sisma X SLD	2.2	0	0	0	2.8E2	0.048	2002	793	Sisma Y SLD	0	2.2	0	0	2.8E2	0.048
2003	794	Sisma X SLV	2.4	0	0	0	3.0E2	0.048	2004	794	Sisma Y SLV	0	2.4	0	0	3.0E2	0.048
2005	794	Sisma X SLD	2.4	0	0	0	3.0E2	0.048	2006	794	Sisma Y SLD	0	2.4	0	0	3.0E2	0.048
2007	795	Sisma X SLV	2.2	0	0	0	2.8E2	0.048	2008	795	Sisma Y SLV	0	2.2	0	0	2.8E2	0.048
2009	795	Sisma X SLD	2.2	0	0	0	2.8E2	0.048	2010	795	Sisma Y SLD	0	2.2	0	0	2.8E2	0.048
2011	796	Sisma X SLV	2.2	0	0	0	276.51	0.048	2012	796	Sisma Y SLV	0	2.2	0	0	276.51	0.048
2013	796	Sisma X SLD	2.2	0	0	0	276.51	0.048	2014	796	Sisma Y SLD	0	2.2	0	0	276.51	0.048
2015	797	Sisma X SLV	2.3	0	0	0	2.8E2	0.048	2016	797	Sisma Y SLV	0	2.3	0	0	2.8E2	0.048
2017	797	Sisma X SLD	2.2	0	0	0	2.8E2	0.048	2018	797	Sisma Y SLD	0	2.2	0	0	2.8E2	0.048
2019	798	Sisma X SLV	2.4	0	0	0	3.0E2	0.048	2020	798	Sisma Y SLV	0	2.4	0	0	3.0E2	0.048
2021	798	Sisma X SLD	2.4	0	0	0	3.0E2	0.048	2022	798	Sisma Y SLD	0	2.4	0	0	3.0E2	0.048
2023	799	Sisma X SLV	2.2	0	0	0	2.8E2	0.048	2024	799	Sisma Y SLV	0	2.2	0	0	2.8E2	0.048
2025	799	Sisma X SLD	2.2	0	0	0	2.8E2	0.048	2026	799	Sisma Y SLD	0	2.2	0	0	2.8E2	0.048
2027	800	Sisma X SLV	2.2	0	0	0	2.8E2	0.048	2028	800	Sisma Y SLV	0	2.2	0	0	2.8E2	0.048
2029	800	Sisma X SLD	2.2	0	0	0	2.8E2	0.048	2030	800	Sisma Y SLD	0	2.2	0	0	2.8E2	0.048
2031	801	Sisma X SLV	2.3	0	0	0	2.8E2	0.048	2032	801	Sisma Y SLV	0	2.3	0	0	2.8E2	0.048
2033	801	Sisma X SLD	2.2	0	0	0	2.8E2	0.048	2034	801	Sisma Y SLD	0	2.2	0	0	2.8E2	0.048
2035	802	Sisma X SLV	2.2	0	0	0	2.8E2	0.048	2036	802	Sisma Y SLV	0	2.2	0	0	2.8E2	0.048
2037	802	Sisma X SLD	2.2	0	0	0	2.8E2	0.048	2038	802	Sisma Y SLD	0	2.2	0	0	2.8E2	0.048
2039	803	Sisma X SLV	2.2	0	0	0	2.7E2	0.048	2040	803	Sisma Y SLV	0	2.2	0	0	2.7E2	0.048
2041	803	Sisma X SLD	2.2	0	0	0	2.7E2	0.048	2042	803	Sisma Y SLD	0	2.2	0	0	2.7E2	0.048
2043	804	Sisma X SLV	3.9	0	0	0	4.9E2	0.048	2044	804	Sisma Y SLV	0	3.9	0	0	4.9E2	0.048
2045	804	Sisma X SLD	3.9	0	0	0	4.9E2	0.048	2046	804	Sisma Y SLD	0	3.9	0	0	4.9E2	0.048
2047	805	Sisma X SLV	3.6	0	0	0	4.4E2	0.048	2048	805	Sisma Y SLV	0	3.6	0	0	4.4E2	0.048
2049	805	Sisma X SLD	3.6	0	0	0	4.4E2	0.048	2050	805	Sisma Y SLD	0	3.6	0	0	4.4E2	0.048
2051	806	Sisma X SLV	2.3	0	0	0	281.27	0.048	2052	806	Sisma Y SLV	0	2.3	0	0	281.27	0.048
2053	806	Sisma X SLD	2.2	0	0	0	281.27	0.048	2054	806	Sisma Y SLD	0	2.2	0	0	281.27	0.048
2055	807	Sisma X SLV	2.3	0	0	0	2.8E2	0.048	2056	807	Sisma Y SLV	0	2.3	0	0	2.8E2	0.048
2057	807	Sisma X SLD	2.2	0	0	0	2.8E2	0.048	2058	807	Sisma Y SLD	0	2.2	0	0	2.8E2	0.048
2059	808	Sisma X SLV	2.2	0	0	0	2.8E2	0.048	2060	808	Sisma Y SLV	0	2.2	0	0	2.8E2	0.048
2061	808	Sisma X SLD	2.2	0	0	0	2.8E2	0.048	2062	808	Sisma Y SLD	0	2.2	0	0	2.8E2	0.048
2063	809	Sisma X SLV	2.6	0	0	0	3.2E2	0.048	2064	809	Sisma Y SLV	0	2.6	0	0	3.2E2	0.048
2065	809	Sisma X SLD	2.6	0	0	0	3.2E2	0.048	2066	809	Sisma Y SLD	0	2.6	0	0	3.2E2	0.048
2067	810	Sisma X SLV	2.6	0	0	0	3.2E2	0.048	2068	810	Sisma Y SLV	0	2.6	0	0	3.2E2	0.048
2069	810	Sisma X SLD	2.6	0	0	0	3.2E2	0.048	2070	810	Sisma Y SLD	0	2.6	0	0	3.2E2	0.048
2071	811	Sisma X SLV	2.6	0	0	0	3.2E2	0.048	2072	811	Sisma Y SLV	0	2.6	0	0	3.2E2	0.048
2073	811	Sisma X SLD	2.6	0	0	0	3.2E2	0.048	2074	811	Sisma Y SLD	0	2.6	0	0	3.2E2	0.048
2075	812	Sisma X SLV	2.6	0	0	0	3.2E2	0.048	2076	812	Sisma Y SLV	0	2.6	0	0	3.2E2	0.048
2077	812	Sisma X SLD	2.6	0	0	0	3.2E2	0.048	2078	812	Sisma Y SLD	0	2.6	0	0	3.2E2	0.048
2079	813	Sisma X SLV	2.6	0	0	0	3.3E2	0.048	2080	813	Sisma Y SLV	0	2.6	0	0	3.3E2	0.048
2081	813	Sisma X SLD	2.6	0	0	0	3.3E2	0.048	2082	813	Sisma Y SLD	0	2.6	0	0	3.3E2	0.048
2083	814	Sisma X SLV	2.6	0	0	0	3.3E2	0.048	2084	814	Sisma Y SLV	0	2.6	0	0	3.3E2	0.048
2085	814	Sisma X SLD	2.6	0	0	0	3.3E2	0.048	2086	814	Sisma Y SLD	0	2.6	0	0	3.3E2	0.048
2087	815	Sisma X SLV	2.7	0	0	0	328.49	0.048	2088	815	Sisma Y SLV	0	2.7	0	0	328.49	0.048
2089	815	Sisma X SLD	2.6	0	0	0	328.49	0.048	2090	815	Sisma Y SLD	0	2.6	0	0	328.49	0.048
2091	816	Sisma X SLV	2.7	0	0	0	328.49	0.048	2092	816	Sisma Y SLV	0	2.7	0	0	328.49	0.048
2093	816	Sisma X SLD	2.6	0	0	0	328.49	0.048	2094	816	Sisma Y SLD	0	2.6	0	0	328.49	0.048
2095	817	Sisma X SLV	2.7	0	0	0	3.3E2	0.048	2096	817	Sisma Y SLV	0	2.7	0	0	3.3E2	0.048
2097	817	Sisma X SLD	2.6	0	0	0	3.3E2	0.048	2098	817	Sisma Y SLD	0	2.6	0	0	3.3E2	0.048
2099	818	Sisma X SLV	2.7	0	0	0	3.3E2	0.048	2100	818	Sisma Y SLV	0	2.7	0	0	3.3E2	0.048
2101	818	Sisma X SLD	2.6	0	0	0	3.3E2	0.048	2102	818	Sisma Y SLD	0	2.6	0	0	3.3E2	0.048
2103	819	Sisma X SLV	2.7	0	0	0	3.3E2	0.048	2104	819	Sisma Y SLV	0	2.7	0	0	3.3E2	0.048
2105	819	Sisma X SLD	2.6	0	0	0	3.3E2	0.048	2106	819	Sisma Y SLD	0	2.6	0	0	3.3E2	0.048
2107	820	Sisma X SLV	2.7	0	0	0	3.3E2	0.048	2108	820	Sisma Y SLV	0	2.7	0	0	3.3E2	0.048
2109	820	Sisma X SLD	2.6	0	0	0	3.3E2	0.048	2110	820	Sisma Y SLD	0	2.6	0	0	3.3E2	0.048
2111	821	Sisma X SLV	2.7	0	0	0	3.3E2	0.048	2112	821	Sisma Y SLV	0	2.7	0	0	3.3E2	0.048
2113	821	Sisma X SLD	2.7	0	0	0	3.3E2	0.048	2114	821	Sisma Y SLD	0	2.7	0	0	3.3E2	0.048
2115	822	Sisma X SLV	2.7	0	0	0	3.3E2	0.048	2116	822	Sisma Y SLV	0	2.7	0	0	3.3E2	0.048
2117	822	Sisma X SLD	2.7	0	0	0	3.3E2	0.048	2118	822	Sisma Y SLD	0	2.7	0	0	3.3E2	0.048
2119	823	Sisma X SLV	2.7	0	0	0	3.3E2	0.048	2120	823	Sisma Y SLV	0	2.7	0	0	3.3E2	0.048
2121	823	Sisma X SLD	2.7	0	0	0	3.3E2	0.048	2122	823	Sisma Y SLD	0	2.7	0	0	3.3E2	0.048
2123	824	Sisma X SLV	2.7	0	0	0	3.3E2	0.048	2124	824	Sisma Y SLV	0	2.7	0	0	3.3E2	0.048
2125	824	Sisma X SLD	2.7	0	0	0	3.3E2	0.048	2126	824	Sisma Y SLD	0	2.7	0	0	3.3E2	0.048
2127	825	Sisma X SLV	2.7	0	0	0	3.3E2	0.048	2128	825	Sisma Y SLV	0	2.7	0	0	3.3E2	0.048
2129	825	Sisma X SLD	2.7	0	0	0	3.3E2	0.048	2130	825	Sisma Y SLD	0	2.7	0	0	3.3E2	0.048
2131	826	Sisma X SLV	2.7	0	0	0	3.3E2	0.048	2132	826	Sisma Y SLV	0	2.7	0	0	3.3E2	0.048
2133	826	Sisma X SLD	2.7	0	0	0	3.3E2	0.048	2134	826	Sisma Y SLD	0	2.7	0	0	3.3E2	0.048
2135	827	Sisma X SLV	2.7	0	0	0	3.3E2	0.048	2136	827	Sisma Y SLV	0	2.7	0	0	3.3E2	0.048
2137	827	Sisma X SLD	2.7	0	0	0	3.3E2	0.048	2138	827	Sisma Y SLD	0	2.7	0	0	3.3E2	0.048
2139	828	Sisma X SLV	2.7	0	0	0	3.3E2	0.048	2140	828	Sisma Y SLV	0	2.7	0	0	3.3E2	0.048
2141	828	Sisma X SLD	2.7	0	0	0	3.3E2	0.048	2142	828	Sisma Y SLD	0	2.7	0	0	3.3E2	0.048
2143	829	Sisma X SLV	2.7	0	0	0	3.3E2	0.048	2144	829	Sisma Y SLV	0	2.7	0	0	3.3E2	0.048
2145	829	Sisma X SLD	2.7	0	0	0	3.3E2	0.048	2146	829	Sisma Y SLD	0	2.7	0	0	3.3E2	0.048
2147	830	Sisma X SLV	2.7	0	0	0	3.3E2	0.048	2148	830	Sisma Y SLV	0	2.7	0	0	3.3E2	0.048
2149	830	Sisma X SLD	2.7	0	0	0	3.3E2	0.048	2150	830	Sisma Y SLD	0	2.7	0	0	3.3E2	0.048
2151	831	Sisma X SLV	4.3	0	0	0	5.2E2	0.048	2152	831	Sisma Y SLV	0	4.3	0	0	5.2E2	0.048
2153	831	Sisma X SLD	4.2	0	0	0	5.2E2	0.048	2154	831	Sisma Y SLD	0	4.2	0	0	5.2E2	0.048

Indice	Nodo	Condizione	Fx	Fy	Fz	Mz	Peso	Gamma	Indice	Nodo	Condizione	Fx	Fy	Fz	Mz	Peso	Gamma
2155	832	Sisma X SLV	3.9	0	0	0	4.8E2	0.048	2156	832	Sisma Y SLV	0	3.9	0	0	4.8E2	0.048
2157	832	Sisma X SLD	3.8	0	0	0	4.8E2	0.048	2158	832	Sisma Y SLD	0	3.8	0	0	4.8E2	0.048
2159	833	Sisma X SLV	2.6	0	0	0	3.2E2	0.048	2160	833	Sisma Y SLV	0	2.6	0	0	3.2E2	0.048
2161	833	Sisma X SLD	2.6	0	0	0	3.2E2	0.048	2162	833	Sisma Y SLD	0	2.6	0	0	3.2E2	0.048
2163	834	Sisma X SLV	2.6	0	0	0	3.2E2	0.048	2164	834	Sisma Y SLV	0	2.6	0	0	3.2E2	0.048
2165	834	Sisma X SLD	2.6	0	0	0	3.2E2	0.048	2166	834	Sisma Y SLD	0	2.6	0	0	3.2E2	0.048
2167	835	Sisma X SLV	2.6	0	0	0	3.2E2	0.048	2168	835	Sisma Y SLV	0	2.6	0	0	3.2E2	0.048
2169	835	Sisma X SLD	2.6	0	0	0	3.2E2	0.048	2170	835	Sisma Y SLD	0	2.6	0	0	3.2E2	0.048
2171	836	Sisma X SLV	2.6	0	0	0	3.2E2	0.048	2172	836	Sisma Y SLV	0	2.6	0	0	3.2E2	0.048
2173	836	Sisma X SLD	2.6	0	0	0	3.2E2	0.048	2174	836	Sisma Y SLD	0	2.6	0	0	3.2E2	0.048
2175	837	Sisma X SLV	2.6	0	0	0	3.2E2	0.048	2176	837	Sisma Y SLV	0	2.6	0	0	3.2E2	0.048
2177	837	Sisma X SLD	2.6	0	0	0	3.2E2	0.048	2178	837	Sisma Y SLD	0	2.6	0	0	3.2E2	0.048
2179	838	Sisma X SLV	2.6	0	0	0	3.2E2	0.048	2180	838	Sisma Y SLV	0	2.6	0	0	3.2E2	0.048
2181	838	Sisma X SLD	2.6	0	0	0	3.2E2	0.048	2182	838	Sisma Y SLD	0	2.6	0	0	3.2E2	0.048
2183	839	Sisma X SLV	2.6	0	0	0	3.2E2	0.048	2184	839	Sisma Y SLV	0	2.6	0	0	3.2E2	0.048
2185	839	Sisma X SLD	2.6	0	0	0	3.2E2	0.048	2186	839	Sisma Y SLD	0	2.6	0	0	3.2E2	0.048
2187	840	Sisma X SLV	2.6	0	0	0	3.2E2	0.048	2188	840	Sisma Y SLV	0	2.6	0	0	3.2E2	0.048
2189	840	Sisma X SLD	2.6	0	0	0	3.2E2	0.048	2190	840	Sisma Y SLD	0	2.6	0	0	3.2E2	0.048
2191	841	Sisma X SLV	2.6	0	0	0	3.2E2	0.048	2192	841	Sisma Y SLV	0	2.6	0	0	3.2E2	0.048
2193	841	Sisma X SLD	2.6	0	0	0	3.2E2	0.048	2194	841	Sisma Y SLD	0	2.6	0	0	3.2E2	0.048
2195	842	Sisma X SLV	2.6	0	0	0	3.2E2	0.048	2196	842	Sisma Y SLV	0	2.6	0	0	3.2E2	0.048
2197	842	Sisma X SLD	2.6	0	0	0	3.2E2	0.048	2198	842	Sisma Y SLD	0	2.6	0	0	3.2E2	0.048
2199	843	Sisma X SLV	2.6	0	0	0	324.46	0.048	2200	843	Sisma Y SLV	0	2.6	0	0	324.46	0.048
2201	843	Sisma X SLD	2.6	0	0	0	324.46	0.048	2202	843	Sisma Y SLD	0	2.6	0	0	324.46	0.048
2203	844	Sisma X SLV	2.9	0	0	0	3.6E2	0.048	2204	844	Sisma Y SLV	0	2.9	0	0	3.6E2	0.048
2205	844	Sisma X SLD	2.9	0	0	0	3.6E2	0.048	2206	844	Sisma Y SLD	0	2.9	0	0	3.6E2	0.048
2207	845	Sisma X SLV	3.4	0	0	0	4.2E2	0.048	2208	845	Sisma Y SLV	0	3.4	0	0	4.2E2	0.048
2209	845	Sisma X SLD	3.3	0	0	0	4.2E2	0.048	2210	845	Sisma Y SLD	0	3.3	0	0	4.2E2	0.048
2211	846	Sisma X SLV	3.6	0	0	0	4.4E2	0.048	2212	846	Sisma Y SLV	0	3.6	0	0	4.4E2	0.048
2213	846	Sisma X SLD	3.5	0	0	0	4.4E2	0.048	2214	846	Sisma Y SLD	0	3.5	0	0	4.4E2	0.048
2215	847	Sisma X SLV	2.8	0	0	0	3.5E2	0.048	2216	847	Sisma Y SLV	0	2.8	0	0	3.5E2	0.048
2217	847	Sisma X SLD	2.8	0	0	0	3.5E2	0.048	2218	847	Sisma Y SLD	0	2.8	0	0	3.5E2	0.048
2219	848	Sisma X SLV	2.8	0	0	0	3.5E2	0.048	2220	848	Sisma Y SLV	0	2.8	0	0	3.5E2	0.048
2221	848	Sisma X SLD	2.8	0	0	0	3.5E2	0.048	2222	848	Sisma Y SLD	0	2.8	0	0	3.5E2	0.048
2223	849	Sisma X SLV	2.8	0	0	0	3.5E2	0.048	2224	849	Sisma Y SLV	0	2.8	0	0	3.5E2	0.048
2225	849	Sisma X SLD	2.8	0	0	0	3.5E2	0.048	2226	849	Sisma Y SLD	0	2.8	0	0	3.5E2	0.048
2227	850	Sisma X SLV	2.8	0	0	0	3.5E2	0.048	2228	850	Sisma Y SLV	0	2.8	0	0	3.5E2	0.048
2229	850	Sisma X SLD	2.8	0	0	0	3.5E2	0.048	2230	850	Sisma Y SLD	0	2.8	0	0	3.5E2	0.048
2231	851	Sisma X SLV	2.8	0	0	0	3.5E2	0.048	2232	851	Sisma Y SLV	0	2.8	0	0	3.5E2	0.048
2233	851	Sisma X SLD	2.8	0	0	0	3.5E2	0.048	2234	851	Sisma Y SLD	0	2.8	0	0	3.5E2	0.048
2235	852	Sisma X SLV	2.8	0	0	0	3.5E2	0.048	2236	852	Sisma Y SLV	0	2.8	0	0	3.5E2	0.048
2237	852	Sisma X SLD	2.8	0	0	0	3.5E2	0.048	2238	852	Sisma Y SLD	0	2.8	0	0	3.5E2	0.048
2239	853	Sisma X SLV	2.8	0	0	0	3.5E2	0.048	2240	853	Sisma Y SLV	0	2.8	0	0	3.5E2	0.048
2241	853	Sisma X SLD	2.8	0	0	0	3.5E2	0.048	2242	853	Sisma Y SLD	0	2.8	0	0	3.5E2	0.048
2243	854	Sisma X SLV	2.8	0	0	0	345.79	0.048	2244	854	Sisma Y SLV	0	2.8	0	0	345.79	0.048
2245	854	Sisma X SLD	2.8	0	0	0	345.79	0.048	2246	854	Sisma Y SLD	0	2.8	0	0	345.79	0.048
2247	855	Sisma X SLV	2.8	0	0	0	345.26	0.048	2248	855	Sisma Y SLV	0	2.8	0	0	345.26	0.048
2249	855	Sisma X SLD	2.8	0	0	0	345.26	0.048	2250	855	Sisma Y SLD	0	2.8	0	0	345.26	0.048
2251	856	Sisma X SLV	2.8	0	0	0	345.02	0.048	2252	856	Sisma Y SLV	0	2.8	0	0	345.02	0.048
2253	856	Sisma X SLD	2.8	0	0	0	345.02	0.048	2254	856	Sisma Y SLD	0	2.8	0	0	345.02	0.048
2255	857	Sisma X SLV	2.3	0	0	0	2.9E2	0.048	2256	857	Sisma Y SLV	0	2.3	0	0	2.9E2	0.048
2257	857	Sisma X SLD	2.3	0	0	0	2.9E2	0.048	2258	857	Sisma Y SLD	0	2.3	0	0	2.9E2	0.048
2259	858	Sisma X SLV	2.2	0	0	0	2.8E2	0.048	2260	858	Sisma Y SLV	0	2.2	0	0	2.8E2	0.048
2261	858	Sisma X SLD	2.2	0	0	0	2.8E2	0.048	2262	858	Sisma Y SLD	0	2.2	0	0	2.8E2	0.048
2263	859	Sisma X SLV	2.2	0	0	0	2.8E2	0.048	2264	859	Sisma Y SLV	0	2.2	0	0	2.8E2	0.048
2265	859	Sisma X SLD	2.2	0	0	0	2.8E2	0.048	2266	859	Sisma Y SLD	0	2.2	0	0	2.8E2	0.048
2267	860	Sisma X SLV	3.8	0	0	0	470.17	0.048	2268	860	Sisma Y SLV	0	3.8	0	0	470.17	0.048
2269	860	Sisma X SLD	3.8	0	0	0	470.17	0.048	2270	860	Sisma Y SLD	0	3.8	0	0	470.17	0.048
2271	861	Sisma X SLV	3.8	0	0	0	4.7E2	0.048	2272	861	Sisma Y SLV	0	3.8	0	0	4.7E2	0.048
2273	861	Sisma X SLD	3.7	0	0	0	4.7E2	0.048	2274	861	Sisma Y SLD	0	3.7	0	0	4.7E2	0.048
2275	862	Sisma X SLV	2.3	0	0	0	2.9E2	0.048	2276	862	Sisma Y SLV	0	2.3	0	0	2.9E2	0.048
2277	862	Sisma X SLD	2.3	0	0	0	2.9E2	0.048	2278	862	Sisma Y SLD	0	2.3	0	0	2.9E2	0.048
2279	863	Sisma X SLV	1.2	0	0	0	1.5E2	0.049	2280	863	Sisma Y SLV	0	1.2	0	0	1.5E2	0.049
2281	863	Sisma X SLD	1.2	0	0	0	1.5E2	0.049	2282	863	Sisma Y SLD	0	1.2	0	0	1.5E2	0.049
2283	864	Sisma X SLV	1.2	0	0	0	1.5E2	0.049	2284	864	Sisma Y SLV	0	1.2	0	0	1.5E2	0.049
2285	864	Sisma X SLD	1.2	0	0	0	1.5E2	0.049	2286	864	Sisma Y SLD	0	1.2	0	0	1.5E2	0.049
2287	865	Sisma X SLV	1.2	0	0	0	1.5E2	0.049	2288	865	Sisma Y SLV	0	1.2	0	0	1.5E2	0.049
2289	865	Sisma X SLD	1.2	0	0	0	1.5E2	0.049	2290	865	Sisma Y SLD	0	1.2	0	0	1.5E2	0.049
2291	866	Sisma X SLV	2.4	0	0	0	2.8E2	0.049	2292	866	Sisma Y SLV	0	2.4	0	0	2.8E2	0.049
2293	866	Sisma X SLD	2.3	0	0	0	2.8E2	0.049	2294	866	Sisma Y SLD	0	2.3	0	0	2.8E2	0.049
2295	867	Sisma X SLV	1.4	0	0	0	1.6E2	0.049	2296	867	Sisma Y SLV	0	1.4	0	0	1.6E2	0.049
2297	867	Sisma X SLD	1.3	0	0	0	1.6E2	0.049	2298	867	Sisma Y SLD	0	1.3	0	0	1.6E2	0.049
2299	868	Sisma X SLV	1.3	0	0	0	1.5E2	0.049	2300	868	Sisma Y SLV	0	1.3	0	0	1.5E2	0.049
2301	868	Sisma X SLD	1.3	0	0	0	1.5E2	0.049	2302	868	Sisma Y SLD	0	1.3	0	0	1.5E2	0.049
2303	869	Sisma X SLV	2.7	0	0	0	3.2E2	0.049	2304	869	Sisma Y SLV	0	2.7	0	0	3.2E2	0.049
2305	869	Sisma X SLD	2.7	0	0	0	3.2E2	0.049	2306	869	Sisma Y SLD	0	2.7	0	0	3.2E2	0.049
2307	870	Sisma X SLV	2.5	0	0	0	2.9E2	0.049	2308	870	Sisma Y SLV	0	2.5	0	0	2.9E2	0.049
2309	870	Sisma X SLD	2.4	0	0	0	2.9E2	0.049	2310	870	Sisma Y SLD	0	2.4	0	0	2.9E2	0.049
2311	871	Sisma X SLV	2.4	0	0	0	2.9E2	0.05	2312	871	Sisma Y SLV	0	2.4	0	0	2.9E2	0.05
2313	871	Sisma X SLD	2.4	0	0	0	2.9E2	0.05	2314	871	Sisma Y SLD	0	2.4	0	0	2.9E2	0.05
2315	872	Sisma X SLV	3.1	0	0	0	3.7E2	0.05	2316	872	Sisma Y SLV	0	3.1	0	0	3.7E2	0.05
2317	872	Sisma X SLD	3.1	0	0	0	3.7E2	0.05	2318	872	Sisma Y SLD	0	3.1	0	0	3.7E2	0.05
2319	873	Sisma X SLV	1.3	0	0	0	1.5E2	0.05	2320	873	Sisma Y SLV	0	1.3	0	0	1.5E2	0.05
2321	873	Sisma X SLD	1.3	0	0	0	1.5E2	0.05	2322	873	Sisma Y SLD	0	1.3	0	0	1.5E2	0.05
2323	874	Sisma X SLV	1.3	0	0	0	1.5E2	0.05	2324	874	Sisma Y SLV	0	1.3	0	0	1.5E2	0.05
2325	874	Sisma X SLD	1.3	0	0	0	1.5E2	0.05	2326	874	Sisma Y SLD	0	1.3	0	0	1.5E2	0.05
2327	875	Sisma X SLV	2.4	0	0	0	2.8E2	0.05	2328	875	Sisma Y SLV	0	2.4	0	0	2.8E2	0.05
2329	875	Sisma X SLD	2.4	0	0	0	2.8E2	0.05	2330	875	Sisma Y SLD	0	2.4	0	0	2.8E2	0.05
2331	876	Sisma X SLV	2.8	0	0	0	322.26	0.05	2332	876	Sisma Y SLV	0	2.8	0	0	322.26	0.05
2333	876	Sisma X SLD	2.7	0	0	0	322.26	0.05	2334	876	Sisma Y SLD	0	2.7	0	0	322.26	0.05
2335	877	Sisma X SLV	1.5	0	0	0	1.7E2	0.05	2336	877	Sisma Y SLV	0	1.5	0	0	1.7E2	0.05
2337	877	Sisma X SLD	1.4	0	0	0	1.7E2	0.05	2338	877	Sisma Y SLD	0	1.4	0	0	1.7E2	0.05
2339	878	Sisma X SLV	1.4	0	0	0	1.6E2	0.051	2340	878	Sisma Y SLV	0	1.4	0	0	1.6E2	0.051
2341	878	Sisma X SLD	1.4	0	0	0	1.6E2	0.051	2342	878	Sisma Y SLD	0	1.4	0	0	1.6E2	0.051
2343	879	Sisma X SLV	1.4	0	0	0	1.6E2	0.051	2344	879	Sisma Y SLV	0	1.4	0	0	1.6E2	0.051
2345	879	Sisma X SLD	1.3	0	0	0	1.6E2	0.051	2346	879	Sisma Y SLD	0	1.3	0	0	1.6E2	0.051
2347	880	Sisma X SLV	2.9	0	0	0	3.3E2	0.051	2348	880	Sisma Y SLV	0	2.9	0	0	3.3E2	0.051
2349	880	Sisma X SLD	2.8	0	0	0	3.3E2	0.051	2350	880	Sisma Y SLD	0	2.8	0	0	3.3E2	0.051
2351	881	Sisma X SLV	2.6	0	0	0	3.0E2	0.051	2352	881	Sisma Y SLV	0	2.6	0	0	3.0E2	0.051
2353	881	Sisma X SLD	2.6	0	0	0	3.0E2	0.051	2354	881	Sisma Y SLD	0	2.6	0	0	3.0E2	0.051
2355	882	Sisma X SLV	1.3	0	0	0	1.5E2	0.051	2356	882	Sisma Y SLV	0	1.3	0	0	1.5E2	0.051
2357	882	Sisma X SLD	1.3	0	0	0	1.5E2	0.051	2358	882	Sisma Y SLD	0	1.3	0	0	1.5E2	0.051
2359	883	Sisma X SLV	1.3	0	0	0	1.5E2	0.051	2360	883	Sisma Y SLV	0	1.3	0	0	1.5E2	0.051
2361	883	Sisma X SLD	1.3	0	0	0	1.5E2	0.051	2362	883	Sisma Y SLD	0	1.3	0	0	1.5E2	0.051

muratura

Indice	Nodo	Condizione	Fx	Fy	Fz	Mz	Peso	Gamma	Indice	Nodo	Condizione	Fx	Fy	Fz	Mz	Peso	Gamma
2363	884	Sisma X SLV	2.5	0	0	0	2.9E2	0.052	2364	884	Sisma Y SLV	0	2.5	0	0	2.9E2	0.052
2365	884	Sisma X SLD	2.5	0	0	0	2.9E2	0.052	2366	884	Sisma Y SLD	0	2.5	0	0	2.9E2	0.052
2367	885	Sisma X SLV	1.3	0	0	0	1.4E2	0.052	2368	885	Sisma Y SLV	0	1.3	0	0	1.4E2	0.052
2369	885	Sisma X SLD	1.3	0	0	0	1.4E2	0.052	2370	885	Sisma Y SLD	0	1.3	0	0	1.4E2	0.052
2371	886	Sisma X SLV	3.3	0	0	0	3.7E2	0.052	2372	886	Sisma Y SLV	0	3.3	0	0	3.7E2	0.052
2373	886	Sisma X SLD	3.3	0	0	0	3.7E2	0.052	2374	886	Sisma Y SLD	0	3.3	0	0	3.7E2	0.052
2375	887	Sisma X SLV	1.5	0	0	0	1.7E2	0.052	2376	887	Sisma Y SLV	0	1.5	0	0	1.7E2	0.052
2377	887	Sisma X SLD	1.5	0	0	0	1.7E2	0.052	2378	887	Sisma Y SLD	0	1.5	0	0	1.7E2	0.052
2379	888	Sisma X SLV	2.7	0	0	0	3.0E2	0.053	2380	888	Sisma Y SLV	0	2.7	0	0	3.0E2	0.053
2381	888	Sisma X SLD	2.6	0	0	0	3.0E2	0.053	2382	888	Sisma Y SLD	0	2.6	0	0	3.0E2	0.053
2383	889	Sisma X SLV	1.2	0	0	0	1.3E2	0.053	2384	889	Sisma Y SLV	0	1.2	0	0	1.3E2	0.053
2385	889	Sisma X SLD	1.1	0	0	0	1.3E2	0.053	2386	889	Sisma Y SLD	0	1.1	0	0	1.3E2	0.053
2387	890	Sisma X SLV	1.4	0	0	0	1.5E2	0.053	2388	890	Sisma Y SLV	0	1.4	0	0	1.5E2	0.053
2389	890	Sisma X SLD	1.4	0	0	0	1.5E2	0.053	2390	890	Sisma Y SLD	0	1.4	0	0	1.5E2	0.053
2391	891	Sisma X SLV	1.4	0	0	0	1.5E2	0.053	2392	891	Sisma Y SLV	0	1.4	0	0	1.5E2	0.053
2393	891	Sisma X SLD	1.4	0	0	0	1.5E2	0.053	2394	891	Sisma Y SLD	0	1.4	0	0	1.5E2	0.053
2395	892	Sisma X SLV	2.6	0	0	0	2.9E2	0.053	2396	892	Sisma Y SLV	0	2.6	0	0	2.9E2	0.053
2397	892	Sisma X SLD	2.6	0	0	0	2.9E2	0.053	2398	892	Sisma Y SLD	0	2.6	0	0	2.9E2	0.053
2399	893	Sisma X SLV	1.4	0	0	0	1.6E2	0.053	2400	893	Sisma Y SLV	0	1.4	0	0	1.6E2	0.053
2401	893	Sisma X SLD	1.4	0	0	0	1.6E2	0.053	2402	893	Sisma Y SLD	0	1.4	0	0	1.6E2	0.053
2403	894	Sisma X SLV	3	0	0	0	3.3E2	0.053	2404	894	Sisma Y SLV	0	3	0	0	3.3E2	0.053
2405	894	Sisma X SLD	3	0	0	0	3.3E2	0.053	2406	894	Sisma Y SLD	0	3	0	0	3.3E2	0.053
2407	895	Sisma X SLV	2.7	0	0	0	3.0E2	0.053	2408	895	Sisma Y SLV	0	2.7	0	0	3.0E2	0.053
2409	895	Sisma X SLD	2.7	0	0	0	3.0E2	0.053	2410	895	Sisma Y SLD	0	2.7	0	0	3.0E2	0.053
2411	896	Sisma X SLV	3	0	0	0	3.3E2	0.053	2412	896	Sisma Y SLV	0	3	0	0	3.3E2	0.053
2413	896	Sisma X SLD	2.9	0	0	0	3.3E2	0.053	2414	896	Sisma Y SLD	0	2.9	0	0	3.3E2	0.053
2415	897	Sisma X SLV	1.6	0	0	0	1.7E2	0.053	2416	897	Sisma Y SLV	0	1.6	0	0	1.7E2	0.053
2417	897	Sisma X SLD	1.6	0	0	0	1.7E2	0.053	2418	897	Sisma Y SLD	0	1.6	0	0	1.7E2	0.053
2419	898	Sisma X SLV	1.4	0	0	0	1.5E2	0.054	2420	898	Sisma Y SLV	0	1.4	0	0	1.5E2	0.054
2421	898	Sisma X SLD	1.4	0	0	0	1.5E2	0.054	2422	898	Sisma Y SLD	0	1.4	0	0	1.5E2	0.054
2423	899	Sisma X SLV	1.4	0	0	0	1.5E2	0.054	2424	899	Sisma Y SLV	0	1.4	0	0	1.5E2	0.054
2425	899	Sisma X SLD	1.4	0	0	0	1.5E2	0.054	2426	899	Sisma Y SLD	0	1.4	0	0	1.5E2	0.054
2427	900	Sisma X SLV	1.6	0	0	0	1.7E2	0.054	2428	900	Sisma Y SLV	0	1.6	0	0	1.7E2	0.054
2429	900	Sisma X SLD	1.5	0	0	0	1.7E2	0.054	2430	900	Sisma Y SLD	0	1.5	0	0	1.7E2	0.054
2431	901	Sisma X SLV	1.4	0	0	0	1.6E2	0.054	2432	901	Sisma Y SLV	0	1.4	0	0	1.6E2	0.054
2433	901	Sisma X SLD	1.4	0	0	0	1.6E2	0.054	2434	901	Sisma Y SLD	0	1.4	0	0	1.6E2	0.054
2435	902	Sisma X SLV	1.4	0	0	0	1.6E2	0.054	2436	902	Sisma Y SLV	0	1.4	0	0	1.6E2	0.054
2437	902	Sisma X SLD	1.4	0	0	0	1.6E2	0.054	2438	902	Sisma Y SLD	0	1.4	0	0	1.6E2	0.054
2439	903	Sisma X SLV	3.5	0	0	0	3.8E2	0.055	2440	903	Sisma Y SLV	0	3.5	0	0	3.8E2	0.055
2441	903	Sisma X SLD	3.5	0	0	0	3.8E2	0.055	2442	903	Sisma Y SLD	0	3.5	0	0	3.8E2	0.055
2443	904	Sisma X SLV	2.7	0	0	0	2.9E2	0.055	2444	904	Sisma Y SLV	0	2.7	0	0	2.9E2	0.055
2445	904	Sisma X SLD	2.7	0	0	0	2.9E2	0.055	2446	904	Sisma Y SLD	0	2.7	0	0	2.9E2	0.055
2447	905	Sisma X SLV	3.6	0	0	0	3.8E2	0.055	2448	905	Sisma Y SLV	0	3.6	0	0	3.8E2	0.055
2449	905	Sisma X SLD	3.5	0	0	0	3.8E2	0.055	2450	905	Sisma Y SLD	0	3.5	0	0	3.8E2	0.055
2451	906	Sisma X SLV	4	0	0	0	4.3E2	0.055	2452	906	Sisma Y SLV	0	4	0	0	4.3E2	0.055
2453	906	Sisma X SLD	4	0	0	0	4.3E2	0.055	2454	906	Sisma Y SLD	0	4	0	0	4.3E2	0.055
2455	907	Sisma X SLV	4	0	0	0	4.2E2	0.055	2456	907	Sisma Y SLV	0	4	0	0	4.2E2	0.055
2457	907	Sisma X SLD	3.9	0	0	0	4.2E2	0.055	2458	907	Sisma Y SLD	0	3.9	0	0	4.2E2	0.055
2459	908	Sisma X SLV	2.8	0	0	0	2.9E2	0.055	2460	908	Sisma Y SLV	0	2.8	0	0	2.9E2	0.055
2461	908	Sisma X SLD	2.7	0	0	0	2.9E2	0.055	2462	908	Sisma Y SLD	0	2.7	0	0	2.9E2	0.055
2463	909	Sisma X SLV	1.5	0	0	0	1.6E2	0.055	2464	909	Sisma Y SLV	0	1.5	0	0	1.6E2	0.055
2465	909	Sisma X SLD	1.5	0	0	0	1.6E2	0.055	2466	909	Sisma Y SLD	0	1.5	0	0	1.6E2	0.055
2467	910	Sisma X SLV	3.2	0	0	0	3.4E2	0.055	2468	910	Sisma Y SLV	0	3.2	0	0	3.4E2	0.055
2469	910	Sisma X SLD	3.1	0	0	0	3.4E2	0.055	2470	910	Sisma Y SLD	0	3.1	0	0	3.4E2	0.055
2471	911	Sisma X SLV	2.9	0	0	0	302.94	0.055	2472	911	Sisma Y SLV	0	2.9	0	0	302.94	0.055
2473	911	Sisma X SLD	2.8	0	0	0	302.94	0.055	2474	911	Sisma Y SLD	0	2.8	0	0	302.94	0.055
2475	912	Sisma X SLV	1.6	0	0	0	1.7E2	0.056	2476	912	Sisma Y SLV	0	1.6	0	0	1.7E2	0.056
2477	912	Sisma X SLD	1.6	0	0	0	1.7E2	0.056	2478	912	Sisma Y SLD	0	1.6	0	0	1.7E2	0.056
2479	913	Sisma X SLV	2.9	0	0	0	3.0E2	0.056	2480	913	Sisma Y SLV	0	2.9	0	0	3.0E2	0.056
2481	913	Sisma X SLD	2.9	0	0	0	3.0E2	0.056	2482	913	Sisma Y SLD	0	2.9	0	0	3.0E2	0.056
2483	914	Sisma X SLV	1.5	0	0	0	1.6E2	0.056	2484	914	Sisma Y SLV	0	1.5	0	0	1.6E2	0.056
2485	914	Sisma X SLD	1.5	0	0	0	1.6E2	0.056	2486	914	Sisma Y SLD	0	1.5	0	0	1.6E2	0.056
2487	915	Sisma X SLV	1.5	0	0	0	1.6E2	0.056	2488	915	Sisma Y SLV	0	1.5	0	0	1.6E2	0.056
2489	915	Sisma X SLD	1.5	0	0	0	1.6E2	0.056	2490	915	Sisma Y SLD	0	1.5	0	0	1.6E2	0.056
2491	916	Sisma X SLV	3.2	0	0	0	3.4E2	0.056	2492	916	Sisma Y SLV	0	3.2	0	0	3.4E2	0.056
2493	916	Sisma X SLD	3.2	0	0	0	3.4E2	0.056	2494	916	Sisma Y SLD	0	3.2	0	0	3.4E2	0.056
2495	917	Sisma X SLV	1.7	0	0	0	177.99	0.056	2496	917	Sisma Y SLV	0	1.7	0	0	177.99	0.056
2497	917	Sisma X SLD	1.7	0	0	0	177.99	0.056	2498	917	Sisma Y SLD	0	1.7	0	0	177.99	0.056
2499	918	Sisma X SLV	2.9	0	0	0	3.0E2	0.056	2500	918	Sisma Y SLV	0	2.9	0	0	3.0E2	0.056
2501	918	Sisma X SLD	2.8	0	0	0	3.0E2	0.056	2502	918	Sisma Y SLD	0	2.8	0	0	3.0E2	0.056
2503	919	Sisma X SLV	1.2	0	0	0	1.3E2	0.056	2504	919	Sisma Y SLV	0	1.2	0	0	1.3E2	0.056
2505	919	Sisma X SLD	1.2	0	0	0	1.3E2	0.056	2506	919	Sisma Y SLD	0	1.2	0	0	1.3E2	0.056
2507	920	Sisma X SLV	3.8	0	0	0	3.9E2	0.057	2508	920	Sisma Y SLV	0	3.8	0	0	3.9E2	0.057
2509	920	Sisma X SLD	3.7	0	0	0	3.9E2	0.057	2510	920	Sisma Y SLD	0	3.7	0	0	3.9E2	0.057
2511	921	Sisma X SLV	1.6	0	0	0	1.6E2	0.058	2512	921	Sisma Y SLV	0	1.6	0	0	1.6E2	0.058
2513	921	Sisma X SLD	1.6	0	0	0	1.6E2	0.058	2514	921	Sisma Y SLD	0	1.6	0	0	1.6E2	0.058
2515	922	Sisma X SLV	3.4	0	0	0	3.4E2	0.058	2516	922	Sisma Y SLV	0	3.4	0	0	3.4E2	0.058
2517	922	Sisma X SLD	3.3	0	0	0	3.4E2	0.058	2518	922	Sisma Y SLD	0	3.3	0	0	3.4E2	0.058
2519	923	Sisma X SLV	3	0	0	0	3.1E2	0.058	2520	923	Sisma Y SLV	0	3	0	0	3.1E2	0.058
2521	923	Sisma X SLD	3	0	0	0	3.1E2	0.058	2522	923	Sisma Y SLD	0	3	0	0	3.1E2	0.058
2523	924	Sisma X SLV	1.3	0	0	0	1.3E2	0.058	2524	924	Sisma Y SLV	0	1.3	0	0	1.3E2	0.058
2525	924	Sisma X SLD	1.3	0	0	0	1.3E2	0.058	2526	924	Sisma Y SLD	0	1.3	0	0	1.3E2	0.058
2527	925	Sisma X SLV	1.7	0	0	0	1.7E2	0.058	2528	925	Sisma Y SLV	0	1.7	0	0	1.7E2	0.058
2529	925	Sisma X SLD	1.7	0	0	0	1.7E2	0.058	2530	925	Sisma Y SLD	0	1.7	0	0	1.7E2	0.058
2531	926	Sisma X SLV	1.6	0	0	0	1.6E2	0.058	2532	926	Sisma Y SLV	0	1.6	0	0	1.6E2	0.058
2533	926	Sisma X SLD	1.6	0	0	0	1.6E2	0.058	2534	926	Sisma Y SLD	0	1.6	0	0	1.6E2	0.058
2535	927	Sisma X SLV	1.6	0	0	0	1.6E2	0.058	2536	927	Sisma Y SLV	0	1.6	0	0	1.6E2	0.058
2537	927	Sisma X SLD	1.6	0	0	0	1.6E2	0.058	2538	927	Sisma Y SLD	0	1.6	0	0	1.6E2	0.058
2539	928	Sisma X SLV	3	0	0	0	3.0E2	0.058	2540	928	Sisma Y SLV	0	3	0	0	3.0E2	0.058
2541	928	Sisma X SLD	3	0	0	0	3.0E2	0.058	2542	928	Sisma Y SLD	0	3	0	0	3.0E2	0.058
2543	929	Sisma X SLV	3.2	0	0	0	3.1E2	0.06	2544	929	Sisma Y SLV	0	3.2	0	0	3.1E2	0.06
2545	929	Sisma X SLD	3.1	0	0	0	3.1E2	0.06	2546	929	Sisma Y SLD	0	3.1	0	0	3.1E2	0.06
2547	930	Sisma X SLV	3.5	0	0	0	3.4E2	0.06	2548	930	Sisma Y SLV	0	3.5	0	0	3.4E2	0.06
2549	930	Sisma X SLD	3.4	0	0	0	3.4E2	0.06	2550	930	Sisma Y SLD	0	3.4	0	0	3.4E2	0.06
2551	931	Sisma X SLV	1.9	0	0	0	1.8E2	0.06	2552	931	Sisma Y SLV	0	1.9	0	0	1.8E2	0.06
2553	931	Sisma X SLD	1.8	0	0	0	1.8E2	0.06	2554	931	Sisma Y SLD	0	1.8	0	0	1.8E2	0.06
2555	932	Sisma X SLV	4.1	0	0	0	4.0E2	0.06	2556	932	Sisma Y SLV	0	4.1	0	0	4.0E2	0.06
2557	932	Sisma X SLD	4	0	0	0	4.0E2	0.06	2558	932	Sisma Y SLD	0	4	0	0	4.0E2	0.06
2559	933	Sisma X SLV	1.7	0	0	0	1.7E2	0.06	2560	933	Sisma Y SLV	0	1.7	0	0	1.7E2	0.06
2561	933	Sisma X SLD	1.7	0	0	0	1.7E2	0.06	2562	933	Sisma Y SLD	0	1.7	0	0	1.7E2	0.06
2563	934	Sisma X SLV	3.6	0	0	0	3.5E2	0.06	2564	934	Sisma Y SLV	0	3.6	0	0	3.5E2	0.06

Indice	Nodo	Condizione	Fx	Fy	Fz	Mz	Peso	Gamma	Indice	Nodo	Condizione	Fx	Fy	Fz	Mz	Peso	Gamma
2565	934	Sisma X SLD	3.5	0	0	0	3.5E2	0.06	2566	934	Sisma Y SLD	0	3.5	0	0	3.5E2	0.06
2567	935	Sisma X SLV	3.2	0	0	0	3.1E2	0.06	2568	935	Sisma Y SLV	0	3.2	0	0	3.1E2	0.06
2569	935	Sisma X SLD	3.2	0	0	0	3.1E2	0.06	2570	935	Sisma Y SLD	0	3.2	0	0	3.1E2	0.06
2571	936	Sisma X SLV	1.8	0	0	0	1.8E2	0.061	2572	936	Sisma Y SLV	0	1.8	0	0	1.8E2	0.061
2573	936	Sisma X SLD	1.8	0	0	0	1.8E2	0.061	2574	936	Sisma Y SLD	0	1.8	0	0	1.8E2	0.061
2575	937	Sisma X SLV	1.7	0	0	0	1.6E2	0.061	2576	937	Sisma Y SLV	0	1.7	0	0	1.6E2	0.061
2577	937	Sisma X SLD	1.7	0	0	0	1.6E2	0.061	2578	937	Sisma Y SLD	0	1.7	0	0	1.6E2	0.061
2579	938	Sisma X SLV	1.7	0	0	0	1.6E2	0.061	2580	938	Sisma Y SLV	0	1.7	0	0	1.6E2	0.061
2581	938	Sisma X SLD	1.7	0	0	0	1.6E2	0.061	2582	938	Sisma Y SLD	0	1.7	0	0	1.6E2	0.061
2583	939	Sisma X SLV	3.2	0	0	0	3.1E2	0.061	2584	939	Sisma Y SLV	0	3.2	0	0	3.1E2	0.061
2585	939	Sisma X SLD	3.1	0	0	0	3.1E2	0.061	2586	939	Sisma Y SLD	0	3.1	0	0	3.1E2	0.061
2587	940	Sisma X SLV	1.4	0	0	0	1.4E2	0.061	2588	940	Sisma Y SLV	0	1.4	0	0	1.4E2	0.061
2589	940	Sisma X SLD	1.4	0	0	0	1.4E2	0.061	2590	940	Sisma Y SLD	0	1.4	0	0	1.4E2	0.061
2591	941	Sisma X SLV	2.1	0	0	0	2.0E2	0.063	2592	941	Sisma Y SLV	0	2.1	0	0	2.0E2	0.063
2593	941	Sisma X SLD	2.1	0	0	0	2.0E2	0.063	2594	941	Sisma Y SLD	0	2.1	0	0	2.0E2	0.063
2595	942	Sisma X SLV	1.7	0	0	0	1.6E2	0.063	2596	942	Sisma Y SLV	0	1.7	0	0	1.6E2	0.063
2597	942	Sisma X SLD	1.7	0	0	0	1.6E2	0.063	2598	942	Sisma Y SLD	0	1.7	0	0	1.6E2	0.063
2599	943	Sisma X SLV	0.7	0	0	0	68.367	0.063	2600	943	Sisma Y SLV	0	0.7	0	0	68.367	0.063
2601	943	Sisma X SLD	0.7	0	0	0	68.367	0.063	2602	943	Sisma Y SLD	0	0.7	0	0	68.367	0.063
2603	944	Sisma X SLV	0.8	0	0	0	77.578	0.063	2604	944	Sisma Y SLV	0	0.8	0	0	77.578	0.063
2605	944	Sisma X SLD	0.8	0	0	0	77.578	0.063	2606	944	Sisma Y SLD	0	0.8	0	0	77.578	0.063
2607	945	Sisma X SLV	1	0	0	0	91.954	0.063	2608	945	Sisma Y SLV	0	1	0	0	91.954	0.063
2609	945	Sisma X SLD	1	0	0	0	91.954	0.063	2610	945	Sisma Y SLD	0	1	0	0	91.954	0.063
2611	946	Sisma X SLV	0.9	0	0	0	83.991	0.063	2612	946	Sisma Y SLV	0	0.9	0	0	83.991	0.063
2613	946	Sisma X SLD	0.9	0	0	0	83.991	0.063	2614	946	Sisma Y SLD	0	0.9	0	0	83.991	0.063
2615	947	Sisma X SLV	0.9	0	0	0	82.046	0.063	2616	947	Sisma Y SLV	0	0.9	0	0	82.046	0.063
2617	947	Sisma X SLD	0.9	0	0	0	82.046	0.063	2618	947	Sisma Y SLD	0	0.9	0	0	82.046	0.063
2619	948	Sisma X SLV	0.9	0	0	0	80.273	0.063	2620	948	Sisma Y SLV	0	0.9	0	0	80.273	0.063
2621	948	Sisma X SLD	0.9	0	0	0	80.273	0.063	2622	948	Sisma Y SLD	0	0.9	0	0	80.273	0.063
2623	949	Sisma X SLV	2.4	0	0	0	2.2E2	0.063	2624	949	Sisma Y SLV	0	2.4	0	0	2.2E2	0.063
2625	949	Sisma X SLD	2.3	0	0	0	2.2E2	0.063	2626	949	Sisma Y SLD	0	2.3	0	0	2.2E2	0.063
2627	950	Sisma X SLV	1.5	0	0	0	1.4E2	0.063	2628	950	Sisma Y SLV	0	1.5	0	0	1.4E2	0.063
2629	950	Sisma X SLD	1.5	0	0	0	1.4E2	0.063	2630	950	Sisma Y SLD	0	1.5	0	0	1.4E2	0.063
2631	951	Sisma X SLV	1.9	0	0	0	1.8E2	0.063	2632	951	Sisma Y SLV	0	1.9	0	0	1.8E2	0.063
2633	951	Sisma X SLD	1.9	0	0	0	1.8E2	0.063	2634	951	Sisma Y SLD	0	1.9	0	0	1.8E2	0.063
2635	952	Sisma X SLV	0.7	0	0	0	67.745	0.063	2636	952	Sisma Y SLV	0	0.7	0	0	67.745	0.063
2637	952	Sisma X SLD	0.7	0	0	0	67.745	0.063	2638	952	Sisma Y SLD	0	0.7	0	0	67.745	0.063
2639	953	Sisma X SLV	1	0	0	0	89.195	0.063	2640	953	Sisma Y SLV	0	1	0	0	89.195	0.063
2641	953	Sisma X SLD	0.9	0	0	0	89.195	0.063	2642	953	Sisma Y SLD	0	0.9	0	0	89.195	0.063
2643	954	Sisma X SLV	0.9	0	0	0	82.046	0.063	2644	954	Sisma Y SLV	0	0.9	0	0	82.046	0.063
2645	954	Sisma X SLD	0.9	0	0	0	82.046	0.063	2646	954	Sisma Y SLD	0	0.9	0	0	82.046	0.063
2647	955	Sisma X SLV	0.9	0	0	0	80.273	0.063	2648	955	Sisma Y SLV	0	0.9	0	0	80.273	0.063
2649	955	Sisma X SLD	0.9	0	0	0	80.273	0.063	2650	955	Sisma Y SLD	0	0.9	0	0	80.273	0.063
2651	956	Sisma X SLV	2.3	0	0	0	2.2E2	0.063	2652	956	Sisma Y SLV	0	2.3	0	0	2.2E2	0.063
2653	956	Sisma X SLD	2.3	0	0	0	2.2E2	0.063	2654	956	Sisma Y SLD	0	2.3	0	0	2.2E2	0.063
2655	957	Sisma X SLV	2.2	0	0	0	2.0E2	0.063	2656	957	Sisma Y SLV	0	2.2	0	0	2.0E2	0.063
2657	957	Sisma X SLD	2.1	0	0	0	2.0E2	0.063	2658	957	Sisma Y SLD	0	2.1	0	0	2.0E2	0.063
2659	958	Sisma X SLV	1.9	0	0	0	1.7E2	0.063	2660	958	Sisma Y SLV	0	1.9	0	0	1.7E2	0.063
2661	958	Sisma X SLD	1.8	0	0	0	1.7E2	0.063	2662	958	Sisma Y SLD	0	1.8	0	0	1.7E2	0.063
2663	959	Sisma X SLV	1.7	0	0	0	1.6E2	0.063	2664	959	Sisma Y SLV	0	1.7	0	0	1.6E2	0.063
2665	959	Sisma X SLD	1.7	0	0	0	1.6E2	0.063	2666	959	Sisma Y SLD	0	1.7	0	0	1.6E2	0.063
2667	960	Sisma X SLV	1.7	0	0	0	1.5E2	0.063	2668	960	Sisma Y SLV	0	1.7	0	0	1.5E2	0.063
2669	960	Sisma X SLD	1.6	0	0	0	1.5E2	0.063	2670	960	Sisma Y SLD	0	1.6	0	0	1.5E2	0.063
2671	961	Sisma X SLV	1.6	0	0	0	1.5E2	0.063	2672	961	Sisma Y SLV	0	1.6	0	0	1.5E2	0.063
2673	961	Sisma X SLD	1.6	0	0	0	1.5E2	0.063	2674	961	Sisma Y SLD	0	1.6	0	0	1.5E2	0.063
2675	962	Sisma X SLV	1.1	0	0	0	1.0E2	0.064	2676	962	Sisma Y SLV	0	1.1	0	0	1.0E2	0.064
2677	962	Sisma X SLD	1.1	0	0	0	1.0E2	0.064	2678	962	Sisma Y SLD	0	1.1	0	0	1.0E2	0.064
2679	963	Sisma X SLV	2.7	0	0	0	2.4E2	0.067	2680	963	Sisma Y SLV	0	2.7	0	0	2.4E2	0.067
2681	963	Sisma X SLD	2.6	0	0	0	2.4E2	0.067	2682	963	Sisma Y SLD	0	2.6	0	0	2.4E2	0.067
2683	964	Sisma X SLV	1.1	0	0	0	91.425	0.07	2684	964	Sisma Y SLV	0	1.1	0	0	91.425	0.07
2685	964	Sisma X SLD	1.1	0	0	0	91.425	0.07	2686	964	Sisma Y SLD	0	1.1	0	0	91.425	0.07
2687	965	Sisma X SLV	1.7	0	0	0	1.4E2	0.071	2688	965	Sisma Y SLV	0	1.7	0	0	1.4E2	0.071
2689	965	Sisma X SLD	1.7	0	0	0	1.4E2	0.071	2690	965	Sisma Y SLD	0	1.7	0	0	1.4E2	0.071
2691	966	Sisma X SLV	1.3	0	0	0	1.1E2	0.073	2692	966	Sisma Y SLV	0	1.3	0	0	1.1E2	0.073
2693	966	Sisma X SLD	1.3	0	0	0	1.1E2	0.073	2694	966	Sisma Y SLD	0	1.3	0	0	1.1E2	0.073
2695	967	Sisma X SLV	1.4	0	0	0	1.1E2	0.077	2696	967	Sisma Y SLV	0	1.4	0	0	1.1E2	0.077
2697	967	Sisma X SLD	1.4	0	0	0	1.1E2	0.077	2698	967	Sisma Y SLD	0	1.4	0	0	1.1E2	0.077
2699	968	Sisma X SLV	2.2	0	0	0	1.7E2	0.077	2700	968	Sisma Y SLV	0	2.2	0	0	1.7E2	0.077
2701	968	Sisma X SLD	2.2	0	0	0	1.7E2	0.077	2702	968	Sisma Y SLD	0	2.2	0	0	1.7E2	0.077
2703	969	Sisma X SLV	1.7	0	0	0	1.2E2	0.079	2704	969	Sisma Y SLV	0	1.7	0	0	1.2E2	0.079
2705	969	Sisma X SLD	1.7	0	0	0	1.2E2	0.079	2706	969	Sisma Y SLD	0	1.7	0	0	1.2E2	0.079
2707	970	Sisma X SLV	1.3	0	0	0	91.402	0.081	2708	970	Sisma Y SLV	0	1.3	0	0	91.402	0.081
2709	970	Sisma X SLD	1.2	0	0	0	91.402	0.081	2710	970	Sisma Y SLD	0	1.2	0	0	91.402	0.081
2711	971	Sisma X SLV	1.8	0	0	0	1.3E2	0.081	2712	971	Sisma Y SLV	0	1.8	0	0	1.3E2	0.081
2713	971	Sisma X SLD	1.8	0	0	0	1.3E2	0.081	2714	971	Sisma Y SLD	0	1.8	0	0	1.3E2	0.081
2715	972	Sisma X SLV	1.5	0	0	0	1.0E2	0.083	2716	972	Sisma Y SLV	0	1.5	0	0	1.0E2	0.083
2717	972	Sisma X SLD	1.5	0	0	0	1.0E2	0.083	2718	972	Sisma Y SLD	0	1.5	0	0	1.0E2	0.083
2719	973	Sisma X SLV	1.8	0	0	0	1.3E2	0.084	2720	973	Sisma Y SLV	0	1.8	0	0	1.3E2	0.084
2721	973	Sisma X SLD	1.8	0	0	0	1.3E2	0.084	2722	973	Sisma Y SLD	0	1.8	0	0	1.3E2	0.084
2723	974	Sisma X SLV	1.7	0	0	0	1.2E2	0.086	2724	974	Sisma Y SLV	0	1.7	0	0	1.2E2	0.086
2725	974	Sisma X SLD	1.7	0	0	0	1.2E2	0.086	2726	974	Sisma Y SLD	0	1.7	0	0	1.2E2	0.086
2727	975	Sisma X SLV	1.8	0	0	0	1.2E2	0.087	2728	975	Sisma Y SLV	0	1.8	0	0	1.2E2	0.087
2729	975	Sisma X SLD	1.8	0	0	0	1.2E2	0.087	2730	975	Sisma Y SLD	0	1.8	0	0	1.2E2	0.087
2731	976	Sisma X SLV	0.8	0	0	0	53.287	0.089	2732	976	Sisma Y SLV	0	0.8	0	0	53.287	0.089
2733	976	Sisma X SLD	0.8	0	0	0	53.287	0.089	2734	976	Sisma Y SLD	0	0.8	0	0	53.287	0.089
2735	977	Sisma X SLV	2.3	0	0	0	1.4E2	0.092	2736	977	Sisma Y SLV	0	2.3	0	0	1.4E2	0.092
2737	977	Sisma X SLD	2.2	0	0	0	1.4E2	0.092	2738	977	Sisma Y SLD	0	2.2	0	0	1.4E2	0.092
2739	978	Sisma X SLV	2.2	0	0	0	134.39	0.096	2740	978	Sisma Y SLV	0	2.2	0	0	134.39	0.096
2741	978	Sisma X SLD	2.2	0	0	0	134.39	0.096	2742	978	Sisma Y SLD	0	2.2	0	0	134.39	0.096
2743	979	Sisma X SLV	1.7	0	0	0	100.59	0.101	2744	979	Sisma Y SLV	0	1.7	0	0	100.59	0.101
2745	979	Sisma X SLD	1.7	0	0	0	100.59	0.101	2746	979	Sisma Y SLD	0	1.7	0	0	100.59	0.101
2747	980	Sisma X SLV	1.2	0	0	0	68.169	0.106	2748	980	Sisma Y SLV	0	1.2	0	0	68.169	0.106
2749	980	Sisma X SLD	1.2	0	0	0	68.169	0.106	2750	980	Sisma Y SLD	0	1.2	0	0	68.169	0.106
2751	981	Sisma X SLV	5.1	0	0	0	2.7E2	0.109	2752	981	Sisma Y SLV	0	5.1	0	0	2.7E2	0.109
2753	981	Sisma X SLD	5	0	0	0	2.7E2	0.109	2754	981	Sisma Y SLD	0	5	0	0	2.7E2	0.109
2755	982	Sisma X SLV	6.3	0	0	0	3.3E2	0.11	2756	982	Sisma Y SLV	0	6.3	0	0	3.3E2	0.11
2757	982	Sisma X SLD	6.2	0	0	0	3.3E2	0.11	2758	982	Sisma Y SLD	0	6.2	0	0	3.3E2	0.11
2759	983	Sisma X SLV	5.9	0	0	0	3.2E2	0.11	2760	983	Sisma Y SLV	0	5.9	0	0	3.2E2	0.11
2761	983	Sisma X SLD	5.8	0	0	0	3.2E2	0.11	2762	983	Sisma Y SLD	0	5.8	0	0	3.2E2	0.11
2763	984	Sisma X SLV	4	0	0	0	2.1E2	0.11	2764	984	Sisma Y SLV	0	4	0	0	2.1E2	0.11
2765	984	Sisma X SLD	3.9	0	0	0	2.1E2	0.11	2766	984	Sisma Y SLD	0	3.9	0	0	2.1E2	0.11
2767	985	Sisma X SLV	2	0	0	0	1.1E2	0.11	2768	985	Sisma Y SLV	0	2	0	0	1.1E2	0.11
2769	985	Sisma X SLD	2	0	0	0	1.1E2	0.11	2770	985	Sisma Y SLD	0	2	0	0	1.1E2	0.11
2771	986	Sisma X SLV	7.3	0	0	0	3.9E2	0.11	2772	986	Sisma Y SLV	0	7.3	0	0	3.9E2	0.11

Indice	Nodo	Condizione	Fx	Fy	Fz	Mz	Peso	Gamma	Indice	Nodo	Condizione	Fx	Fy	Fz	Mz	Peso	Gamma
2773	986	Sisma X SLD	7.2	0	0	0	3.9E2	0.11	2774	986	Sisma Y SLD	0	7.2	0	0	3.9E2	0.11
2775	987	Sisma X SLV	5.4	0	0	0	2.9E2	0.11	2776	987	Sisma Y SLV	0	5.4	0	0	2.9E2	0.11
2777	987	Sisma X SLD	5.3	0	0	0	2.9E2	0.11	2778	987	Sisma Y SLD	0	5.3	0	0	2.9E2	0.11
2779	988	Sisma X SLV	5.2	0	0	0	2.7E2	0.11	2780	988	Sisma Y SLV	0	5.2	0	0	2.7E2	0.11
2781	988	Sisma X SLD	5.1	0	0	0	2.7E2	0.11	2782	988	Sisma Y SLD	0	5.1	0	0	2.7E2	0.11
2783	989	Sisma X SLV	5.2	0	0	0	2.7E2	0.11	2784	989	Sisma Y SLV	0	5.2	0	0	2.7E2	0.11
2785	989	Sisma X SLD	5.1	0	0	0	2.7E2	0.11	2786	989	Sisma Y SLD	0	5.1	0	0	2.7E2	0.11
2787	990	Sisma X SLV	5.4	0	0	0	2.9E2	0.11	2788	990	Sisma Y SLV	0	5.4	0	0	2.9E2	0.11
2789	990	Sisma X SLD	5.3	0	0	0	2.9E2	0.11	2790	990	Sisma Y SLD	0	5.3	0	0	2.9E2	0.11
2791	991	Sisma X SLV	5.7	0	0	0	3.0E2	0.111	2792	991	Sisma Y SLV	0	5.7	0	0	3.0E2	0.111
2793	991	Sisma X SLD	5.6	0	0	0	3.0E2	0.111	2794	991	Sisma Y SLD	0	5.6	0	0	3.0E2	0.111
2795	992	Sisma X SLV	5.7	0	0	0	3.0E2	0.111	2796	992	Sisma Y SLV	0	5.7	0	0	3.0E2	0.111
2797	992	Sisma X SLD	5.6	0	0	0	3.0E2	0.111	2798	992	Sisma Y SLD	0	5.6	0	0	3.0E2	0.111
2799	993	Sisma X SLV	5.8	0	0	0	3.1E2	0.111	2800	993	Sisma Y SLV	0	5.8	0	0	3.1E2	0.111
2801	993	Sisma X SLD	5.7	0	0	0	3.1E2	0.111	2802	993	Sisma Y SLD	0	5.7	0	0	3.1E2	0.111
2803	994	Sisma X SLV	5.2	0	0	0	2.7E2	0.111	2804	994	Sisma Y SLV	0	5.2	0	0	2.7E2	0.111
2805	994	Sisma X SLD	5.1	0	0	0	2.7E2	0.111	2806	994	Sisma Y SLD	0	5.1	0	0	2.7E2	0.111
2807	995	Sisma X SLV	5.2	0	0	0	273.77	0.111	2808	995	Sisma Y SLV	0	5.2	0	0	273.77	0.111
2809	995	Sisma X SLD	5.1	0	0	0	273.77	0.111	2810	995	Sisma Y SLD	0	5.1	0	0	273.77	0.111
2811	996	Sisma X SLV	5.5	0	0	0	2.9E2	0.111	2812	996	Sisma Y SLV	0	5.5	0	0	2.9E2	0.111
2813	996	Sisma X SLD	5.4	0	0	0	2.9E2	0.111	2814	996	Sisma Y SLD	0	5.4	0	0	2.9E2	0.111
2815	997	Sisma X SLV	6	0	0	0	3.2E2	0.111	2816	997	Sisma Y SLV	0	6	0	0	3.2E2	0.111
2817	997	Sisma X SLD	5.9	0	0	0	3.2E2	0.111	2818	997	Sisma Y SLD	0	5.9	0	0	3.2E2	0.111
2819	998	Sisma X SLV	5.3	0	0	0	2.8E2	0.111	2820	998	Sisma Y SLV	0	5.3	0	0	2.8E2	0.111
2821	998	Sisma X SLD	5.2	0	0	0	2.8E2	0.111	2822	998	Sisma Y SLD	0	5.2	0	0	2.8E2	0.111
2823	999	Sisma X SLV	5.5	0	0	0	2.9E2	0.111	2824	999	Sisma Y SLV	0	5.5	0	0	2.9E2	0.111
2825	999	Sisma X SLD	5.4	0	0	0	2.9E2	0.111	2826	999	Sisma Y SLD	0	5.4	0	0	2.9E2	0.111
2827	1000	Sisma X SLV	5.3	0	0	0	2.8E2	0.111	2828	1000	Sisma Y SLV	0	5.3	0	0	2.8E2	0.111
2829	1000	Sisma X SLD	5.2	0	0	0	2.8E2	0.111	2830	1000	Sisma Y SLD	0	5.2	0	0	2.8E2	0.111
2831	1001	Sisma X SLV	5.4	0	0	0	282.38	0.111	2832	1001	Sisma Y SLV	0	5.4	0	0	282.38	0.111
2833	1001	Sisma X SLD	5.3	0	0	0	282.38	0.111	2834	1001	Sisma Y SLD	0	5.3	0	0	282.38	0.111
2835	1002	Sisma X SLV	5.6	0	0	0	295.12	0.111	2836	1002	Sisma Y SLV	0	5.6	0	0	295.12	0.111
2837	1002	Sisma X SLD	5.5	0	0	0	295.12	0.111	2838	1002	Sisma Y SLD	0	5.5	0	0	295.12	0.111
2839	1003	Sisma X SLV	5.2	0	0	0	274.37	0.111	2840	1003	Sisma Y SLV	0	5.2	0	0	274.37	0.111
2841	1003	Sisma X SLD	5.1	0	0	0	274.37	0.111	2842	1003	Sisma Y SLD	0	5.1	0	0	274.37	0.111
2843	1004	Sisma X SLV	5.5	0	0	0	2.9E2	0.111	2844	1004	Sisma Y SLV	0	5.5	0	0	2.9E2	0.111
2845	1004	Sisma X SLD	5.4	0	0	0	2.9E2	0.111	2846	1004	Sisma Y SLD	0	5.4	0	0	2.9E2	0.111
2847	1005	Sisma X SLV	5.1	0	0	0	270.81	0.111	2848	1005	Sisma Y SLV	0	5.1	0	0	270.81	0.111
2849	1005	Sisma X SLD	5.1	0	0	0	270.81	0.111	2850	1005	Sisma Y SLD	0	5.1	0	0	270.81	0.111
2851	1006	Sisma X SLV	5.3	0	0	0	2.8E2	0.111	2852	1006	Sisma Y SLV	0	5.3	0	0	2.8E2	0.111
2853	1006	Sisma X SLD	5.2	0	0	0	2.8E2	0.111	2854	1006	Sisma Y SLD	0	5.2	0	0	2.8E2	0.111
2855	1007	Sisma X SLV	5.6	0	0	0	2.9E2	0.111	2856	1007	Sisma Y SLV	0	5.6	0	0	2.9E2	0.111
2857	1007	Sisma X SLD	5.5	0	0	0	2.9E2	0.111	2858	1007	Sisma Y SLD	0	5.5	0	0	2.9E2	0.111
2859	1008	Sisma X SLV	5.3	0	0	0	2.8E2	0.111	2860	1008	Sisma Y SLV	0	5.3	0	0	2.8E2	0.111
2861	1008	Sisma X SLD	5.2	0	0	0	2.8E2	0.111	2862	1008	Sisma Y SLD	0	5.2	0	0	2.8E2	0.111
2863	1009	Sisma X SLV	5.1	0	0	0	266.47	0.112	2864	1009	Sisma Y SLV	0	5.1	0	0	266.47	0.112
2865	1009	Sisma X SLD	5	0	0	0	266.47	0.112	2866	1009	Sisma Y SLD	0	5	0	0	266.47	0.112
2867	1010	Sisma X SLV	5.3	0	0	0	2.8E2	0.112	2868	1010	Sisma Y SLV	0	5.3	0	0	2.8E2	0.112
2869	1010	Sisma X SLD	5.3	0	0	0	2.8E2	0.112	2870	1010	Sisma Y SLD	0	5.3	0	0	2.8E2	0.112
2871	1011	Sisma X SLV	5.7	0	0	0	3.0E2	0.112	2872	1011	Sisma Y SLV	0	5.7	0	0	3.0E2	0.112
2873	1011	Sisma X SLD	5.6	0	0	0	3.0E2	0.112	2874	1011	Sisma Y SLD	0	5.6	0	0	3.0E2	0.112
2875	1012	Sisma X SLV	5.7	0	0	0	3.0E2	0.112	2876	1012	Sisma Y SLV	0	5.7	0	0	3.0E2	0.112
2877	1012	Sisma X SLD	5.6	0	0	0	3.0E2	0.112	2878	1012	Sisma Y SLD	0	5.6	0	0	3.0E2	0.112
2879	1013	Sisma X SLV	5	0	0	0	2.6E2	0.112	2880	1013	Sisma Y SLV	0	5	0	0	2.6E2	0.112
2881	1013	Sisma X SLD	4.9	0	0	0	2.6E2	0.112	2882	1013	Sisma Y SLD	0	4.9	0	0	2.6E2	0.112
2883	1014	Sisma X SLV	5.6	0	0	0	2.9E2	0.112	2884	1014	Sisma Y SLV	0	5.6	0	0	2.9E2	0.112
2885	1014	Sisma X SLD	5.5	0	0	0	2.9E2	0.112	2886	1014	Sisma Y SLD	0	5.5	0	0	2.9E2	0.112
2887	1015	Sisma X SLV	5.5	0	0	0	2.9E2	0.112	2888	1015	Sisma Y SLV	0	5.5	0	0	2.9E2	0.112
2889	1015	Sisma X SLD	5.4	0	0	0	2.9E2	0.112	2890	1015	Sisma Y SLD	0	5.4	0	0	2.9E2	0.112
2891	1016	Sisma X SLV	4.9	0	0	0	2.6E2	0.112	2892	1016	Sisma Y SLV	0	4.9	0	0	2.6E2	0.112
2893	1016	Sisma X SLD	4.9	0	0	0	2.6E2	0.112	2894	1016	Sisma Y SLD	0	4.9	0	0	2.6E2	0.112
2895	1017	Sisma X SLV	5.2	0	0	0	2.7E2	0.112	2896	1017	Sisma Y SLV	0	5.2	0	0	2.7E2	0.112
2897	1017	Sisma X SLD	5.2	0	0	0	2.7E2	0.112	2898	1017	Sisma Y SLD	0	5.2	0	0	2.7E2	0.112
2899	1018	Sisma X SLV	5.2	0	0	0	273.85	0.112	2900	1018	Sisma Y SLV	0	5.2	0	0	273.85	0.112
2901	1018	Sisma X SLD	5.1	0	0	0	273.85	0.112	2902	1018	Sisma Y SLD	0	5.1	0	0	273.85	0.112
2903	1019	Sisma X SLV	5.4	0	0	0	2.8E2	0.112	2904	1019	Sisma Y SLV	0	5.4	0	0	2.8E2	0.112
2905	1019	Sisma X SLD	5.3	0	0	0	2.8E2	0.112	2906	1019	Sisma Y SLD	0	5.3	0	0	2.8E2	0.112
2907	1020	Sisma X SLV	5.2	0	0	0	2.7E2	0.112	2908	1020	Sisma Y SLV	0	5.2	0	0	2.7E2	0.112
2909	1020	Sisma X SLD	5.1	0	0	0	2.7E2	0.112	2910	1020	Sisma Y SLD	0	5.1	0	0	2.7E2	0.112
2911	1021	Sisma X SLV	5.7	0	0	0	296.87	0.112	2912	1021	Sisma Y SLV	0	5.7	0	0	296.87	0.112
2913	1021	Sisma X SLD	5.6	0	0	0	296.87	0.112	2914	1021	Sisma Y SLD	0	5.6	0	0	296.87	0.112
2915	1022	Sisma X SLV	5.2	0	0	0	273.91	0.112	2916	1022	Sisma Y SLV	0	5.2	0	0	273.91	0.112
2917	1022	Sisma X SLD	5.1	0	0	0	273.91	0.112	2918	1022	Sisma Y SLD	0	5.1	0	0	273.91	0.112
2919	1023	Sisma X SLV	5.4	0	0	0	2.8E2	0.112	2920	1023	Sisma Y SLV	0	5.4	0	0	2.8E2	0.112
2921	1023	Sisma X SLD	5.3	0	0	0	2.8E2	0.112	2922	1023	Sisma Y SLD	0	5.3	0	0	2.8E2	0.112
2923	1024	Sisma X SLV	5.2	0	0	0	2.7E2	0.112	2924	1024	Sisma Y SLV	0	5.2	0	0	2.7E2	0.112
2925	1024	Sisma X SLD	5.1	0	0	0	2.7E2	0.112	2926	1024	Sisma Y SLD	0	5.1	0	0	2.7E2	0.112
2927	1025	Sisma X SLV	4.9	0	0	0	2.5E2	0.112	2928	1025	Sisma Y SLV	0	4.9	0	0	2.5E2	0.112
2929	1025	Sisma X SLD	4.8	0	0	0	2.5E2	0.112	2930	1025	Sisma Y SLD	0	4.8	0	0	2.5E2	0.112
2931	1026	Sisma X SLV	5.3	0	0	0	2.8E2	0.112	2932	1026	Sisma Y SLV	0	5.3	0	0	2.8E2	0.112
2933	1026	Sisma X SLD	5.3	0	0	0	2.8E2	0.112	2934	1026	Sisma Y SLD	0	5.3	0	0	2.8E2	0.112
2935	1027	Sisma X SLV	5.3	0	0	0	2.8E2	0.112	2936	1027	Sisma Y SLV	0	5.3	0	0	2.8E2	0.112
2937	1027	Sisma X SLD	5.2	0	0	0	2.8E2	0.112	2938	1027	Sisma Y SLD	0	5.2	0	0	2.8E2	0.112
2939	1028	Sisma X SLV	5.5	0	0	0	2.9E2	0.112	2940	1028	Sisma Y SLV	0	5.5	0	0	2.9E2	0.112
2941	1028	Sisma X SLD	5.4	0	0	0	2.9E2	0.112	2942	1028	Sisma Y SLD	0	5.4	0	0	2.9E2	0.112
2943	1029	Sisma X SLV	5.3	0	0	0	278.01	0.112	2944	1029	Sisma Y SLV	0	5.3	0	0	278.01	0.112
2945	1029	Sisma X SLD	5.2	0	0	0	278.01	0.112	2946	1029	Sisma Y SLD	0	5.2	0	0	278.01	0.112
2947	1030	Sisma X SLV	5.3	0	0	0	2.8E2	0.112	2948	1030	Sisma Y SLV	0	5.3	0	0	2.8E2	0.112
2949	1030	Sisma X SLD	5.2	0	0	0	2.8E2	0.112	2950	1030	Sisma Y SLD	0	5.2	0	0	2.8E2	0.112
2951	1031	Sisma X SLV	4.7	0	0	0	2.5E2	0.112	2952	1031	Sisma Y SLV	0	4.7	0	0	2.5E2	0.112
2953	1031	Sisma X SLD	4.7	0	0	0	2.5E2	0.112	2954	1031	Sisma Y SLD	0	4.7	0	0	2.5E2	0.112
2955	1032	Sisma X SLV	5.2	0	0	0	2.7E2	0.112	2956	1032	Sisma Y SLV	0	5.2	0	0	2.7E2	0.112
2957	1032	Sisma X SLD	5.1	0	0	0	2.7E2	0.112	2958	1032	Sisma Y SLD	0	5.1	0	0	2.7E2	0.112
2959	1033	Sisma X SLV	5.4	0	0	0	281.44	0.112	2960	1033	Sisma Y SLV	0	5.4	0	0	281.44	0.112
2961	1033	Sisma X SLD	5.3	0	0	0	281.44	0.112	2962	1033	Sisma Y SLD	0	5.3	0	0	281.44	0.112
2963	1034	Sisma X SLV	5	0	0	0	2.6E2	0.112	2964	1034	Sisma Y SLV	0	5	0	0	2.6E2	0.112
2965	1034	Sisma X SLD	4.9	0	0	0	2.6E2	0.112	2966	1034	Sisma Y SLD	0	4.9	0	0	2.6E2	0.112
2967	1035	Sisma X SLV	5.2	0	0	0	2.7E2	0.112	2968	1035	Sisma Y SLV	0	5.2	0	0	2.7E2	0.112
2969	1035	Sisma X SLD	5.1	0	0	0	2.7E2	0.112	2970	1035	Sisma Y SLD	0	5.1	0	0	2.7E2	0.112
2971	1036	Sisma X SLV	5.5	0	0	0	289.27	0.112	2972	1036	Sisma Y SLV	0	5.5	0	0	289.27	0.112
2973	1036	Sisma X SLD	5.5	0	0	0	289.27	0.112	2974	1036	Sisma Y SLD	0	5.5	0	0	289.27	0.112

Indice	Nodo	Condizione	Fx	Fy	Fz	Mz	Peso	Gamma	Indice	Nodo	Condizione	Fx	Fy	Fz	Mz	Peso	Gamma
2975	1037	Sisma X SLV	5.2	0	0	0	2.7E2	0.112	2976	1037	Sisma Y SLV	0	5.2	0	0	2.7E2	0.112
2977	1037	Sisma X SLD	5.1	0	0	0	2.7E2	0.112	2978	1037	Sisma Y SLD	0	5.1	0	0	2.7E2	0.112
2979	1038	Sisma X SLV	5.3	0	0	0	2.8E2	0.113	2980	1038	Sisma Y SLV	0	5.3	0	0	2.8E2	0.113
2981	1038	Sisma X SLD	5.2	0	0	0	2.8E2	0.113	2982	1038	Sisma Y SLD	0	5.2	0	0	2.8E2	0.113
2983	1039	Sisma X SLV	5.3	0	0	0	2.8E2	0.113	2984	1039	Sisma Y SLV	0	5.3	0	0	2.8E2	0.113
2985	1039	Sisma X SLD	5.2	0	0	0	2.8E2	0.113	2986	1039	Sisma Y SLD	0	5.2	0	0	2.8E2	0.113
2987	1040	Sisma X SLV	4.8	0	0	0	2.5E2	0.113	2988	1040	Sisma Y SLV	0	4.8	0	0	2.5E2	0.113
2989	1040	Sisma X SLD	4.7	0	0	0	2.5E2	0.113	2990	1040	Sisma Y SLD	0	4.7	0	0	2.5E2	0.113
2991	1041	Sisma X SLV	5.4	0	0	0	2.8E2	0.113	2992	1041	Sisma Y SLV	0	5.4	0	0	2.8E2	0.113
2993	1041	Sisma X SLD	5.3	0	0	0	2.8E2	0.113	2994	1041	Sisma Y SLD	0	5.3	0	0	2.8E2	0.113
2995	1042	Sisma X SLV	5.4	0	0	0	2.8E2	0.113	2996	1042	Sisma Y SLV	0	5.4	0	0	2.8E2	0.113
2997	1042	Sisma X SLD	5.3	0	0	0	2.8E2	0.113	2998	1042	Sisma Y SLD	0	5.3	0	0	2.8E2	0.113
2999	1043	Sisma X SLV	5.5	0	0	0	2.8E2	0.113	3000	1043	Sisma Y SLV	0	5.5	0	0	2.8E2	0.113
3001	1043	Sisma X SLD	5.4	0	0	0	2.8E2	0.113	3002	1043	Sisma Y SLD	0	5.4	0	0	2.8E2	0.113
3003	1044	Sisma X SLV	5.8	0	0	0	3.0E2	0.113	3004	1044	Sisma Y SLV	0	5.8	0	0	3.0E2	0.113
3005	1044	Sisma X SLD	5.7	0	0	0	3.0E2	0.113	3006	1044	Sisma Y SLD	0	5.7	0	0	3.0E2	0.113
3007	1045	Sisma X SLV	5.3	0	0	0	2.7E2	0.113	3008	1045	Sisma Y SLV	0	5.3	0	0	2.7E2	0.113
3009	1045	Sisma X SLD	5.2	0	0	0	2.7E2	0.113	3010	1045	Sisma Y SLD	0	5.2	0	0	2.7E2	0.113
3011	1046	Sisma X SLV	5.5	0	0	0	2.9E2	0.113	3012	1046	Sisma Y SLV	0	5.5	0	0	2.9E2	0.113
3013	1046	Sisma X SLD	5.5	0	0	0	2.9E2	0.113	3014	1046	Sisma Y SLD	0	5.5	0	0	2.9E2	0.113
3015	1047	Sisma X SLV	5.1	0	0	0	2.6E2	0.113	3016	1047	Sisma Y SLV	0	5.1	0	0	2.6E2	0.113
3017	1047	Sisma X SLD	5	0	0	0	2.6E2	0.113	3018	1047	Sisma Y SLD	0	5	0	0	2.6E2	0.113
3019	1048	Sisma X SLV	4.7	0	0	0	2.5E2	0.113	3020	1048	Sisma Y SLV	0	4.7	0	0	2.5E2	0.113
3021	1048	Sisma X SLD	4.7	0	0	0	2.5E2	0.113	3022	1048	Sisma Y SLD	0	4.7	0	0	2.5E2	0.113
3023	1049	Sisma X SLV	5.5	0	0	0	282.96	0.114	3024	1049	Sisma Y SLV	0	5.5	0	0	282.96	0.114
3025	1049	Sisma X SLD	5.4	0	0	0	282.96	0.114	3026	1049	Sisma Y SLD	0	5.4	0	0	282.96	0.114
3027	1050	Sisma X SLV	5.4	0	0	0	2.8E2	0.114	3028	1050	Sisma Y SLV	0	5.4	0	0	2.8E2	0.114
3029	1050	Sisma X SLD	5.3	0	0	0	2.8E2	0.114	3030	1050	Sisma Y SLD	0	5.3	0	0	2.8E2	0.114
3031	1051	Sisma X SLV	5.3	0	0	0	2.7E2	0.114	3032	1051	Sisma Y SLV	0	5.3	0	0	2.7E2	0.114
3033	1051	Sisma X SLD	5.2	0	0	0	2.7E2	0.114	3034	1051	Sisma Y SLD	0	5.2	0	0	2.7E2	0.114
3035	1052	Sisma X SLV	5.8	0	0	0	3.0E2	0.114	3036	1052	Sisma Y SLV	0	5.8	0	0	3.0E2	0.114
3037	1052	Sisma X SLD	5.7	0	0	0	3.0E2	0.114	3038	1052	Sisma Y SLD	0	5.7	0	0	3.0E2	0.114
3039	1053	Sisma X SLV	5.3	0	0	0	2.7E2	0.114	3040	1053	Sisma Y SLV	0	5.3	0	0	2.7E2	0.114
3041	1053	Sisma X SLD	5.2	0	0	0	2.7E2	0.114	3042	1053	Sisma Y SLD	0	5.2	0	0	2.7E2	0.114
3043	1054	Sisma X SLV	5.4	0	0	0	2.8E2	0.114	3044	1054	Sisma Y SLV	0	5.4	0	0	2.8E2	0.114
3045	1054	Sisma X SLD	5.3	0	0	0	2.8E2	0.114	3046	1054	Sisma Y SLD	0	5.3	0	0	2.8E2	0.114
3047	1055	Sisma X SLV	5.4	0	0	0	278.43	0.114	3048	1055	Sisma Y SLV	0	5.4	0	0	278.43	0.114
3049	1055	Sisma X SLD	5.3	0	0	0	278.43	0.114	3050	1055	Sisma Y SLD	0	5.3	0	0	278.43	0.114
3051	1056	Sisma X SLV	5	0	0	0	2.6E2	0.114	3052	1056	Sisma Y SLV	0	5	0	0	2.6E2	0.114
3053	1056	Sisma X SLD	5	0	0	0	2.6E2	0.114	3054	1056	Sisma Y SLD	0	5	0	0	2.6E2	0.114
3055	1057	Sisma X SLV	5.7	0	0	0	2.9E2	0.115	3056	1057	Sisma Y SLV	0	5.7	0	0	2.9E2	0.115
3057	1057	Sisma X SLD	5.6	0	0	0	2.9E2	0.115	3058	1057	Sisma Y SLD	0	5.6	0	0	2.9E2	0.115
3059	1058	Sisma X SLV	5.4	0	0	0	276.92	0.115	3060	1058	Sisma Y SLV	0	5.4	0	0	276.92	0.115
3061	1058	Sisma X SLD	5.3	0	0	0	276.92	0.115	3062	1058	Sisma Y SLD	0	5.3	0	0	276.92	0.115
3063	1059	Sisma X SLV	5.7	0	0	0	2.9E2	0.115	3064	1059	Sisma Y SLV	0	5.7	0	0	2.9E2	0.115
3065	1059	Sisma X SLD	5.6	0	0	0	2.9E2	0.115	3066	1059	Sisma Y SLD	0	5.6	0	0	2.9E2	0.115
3067	1060	Sisma X SLV	5.3	0	0	0	2.7E2	0.115	3068	1060	Sisma Y SLV	0	5.3	0	0	2.7E2	0.115
3069	1060	Sisma X SLD	5.2	0	0	0	2.7E2	0.115	3070	1060	Sisma Y SLD	0	5.2	0	0	2.7E2	0.115
3071	1061	Sisma X SLV	5	0	0	0	255.48	0.115	3072	1061	Sisma Y SLV	0	5	0	0	255.48	0.115
3073	1061	Sisma X SLD	4.9	0	0	0	255.48	0.115	3074	1061	Sisma Y SLD	0	4.9	0	0	255.48	0.115
3075	1062	Sisma X SLV	5.5	0	0	0	2.8E2	0.115	3076	1062	Sisma Y SLV	0	5.5	0	0	2.8E2	0.115
3077	1062	Sisma X SLD	5.4	0	0	0	2.8E2	0.115	3078	1062	Sisma Y SLD	0	5.4	0	0	2.8E2	0.115
3079	1063	Sisma X SLV	5.5	0	0	0	2.8E2	0.115	3080	1063	Sisma Y SLV	0	5.5	0	0	2.8E2	0.115
3081	1063	Sisma X SLD	5.4	0	0	0	2.8E2	0.115	3082	1063	Sisma Y SLD	0	5.4	0	0	2.8E2	0.115
3083	1064	Sisma X SLV	5.6	0	0	0	2.8E2	0.115	3084	1064	Sisma Y SLV	0	5.6	0	0	2.8E2	0.115
3085	1064	Sisma X SLD	5.5	0	0	0	2.8E2	0.115	3086	1064	Sisma Y SLD	0	5.5	0	0	2.8E2	0.115
3087	1065	Sisma X SLV	5.5	0	0	0	2.8E2	0.115	3088	1065	Sisma Y SLV	0	5.5	0	0	2.8E2	0.115
3089	1065	Sisma X SLD	5.4	0	0	0	2.8E2	0.115	3090	1065	Sisma Y SLD	0	5.4	0	0	2.8E2	0.115
3091	1066	Sisma X SLV	5.8	0	0	0	2.9E2	0.115	3092	1066	Sisma Y SLV	0	5.8	0	0	2.9E2	0.115
3093	1066	Sisma X SLD	5.7	0	0	0	2.9E2	0.115	3094	1066	Sisma Y SLD	0	5.7	0	0	2.9E2	0.115
3095	1067	Sisma X SLV	5.4	0	0	0	2.7E2	0.115	3096	1067	Sisma Y SLV	0	5.4	0	0	2.7E2	0.115
3097	1067	Sisma X SLD	5.3	0	0	0	2.7E2	0.115	3098	1067	Sisma Y SLD	0	5.3	0	0	2.7E2	0.115
3099	1068	Sisma X SLV	5.5	0	0	0	2.8E2	0.115	3100	1068	Sisma Y SLV	0	5.5	0	0	2.8E2	0.115
3101	1068	Sisma X SLD	5.4	0	0	0	2.8E2	0.115	3102	1068	Sisma Y SLD	0	5.4	0	0	2.8E2	0.115
3103	1069	Sisma X SLV	5.5	0	0	0	2.8E2	0.115	3104	1069	Sisma Y SLV	0	5.5	0	0	2.8E2	0.115
3105	1069	Sisma X SLD	5.4	0	0	0	2.8E2	0.115	3106	1069	Sisma Y SLD	0	5.4	0	0	2.8E2	0.115
3107	1070	Sisma X SLV	5.8	0	0	0	3.0E2	0.115	3108	1070	Sisma Y SLV	0	5.8	0	0	3.0E2	0.115
3109	1070	Sisma X SLD	5.7	0	0	0	3.0E2	0.115	3110	1070	Sisma Y SLD	0	5.7	0	0	3.0E2	0.115
3111	1071	Sisma X SLV	5.4	0	0	0	2.7E2	0.115	3112	1071	Sisma Y SLV	0	5.4	0	0	2.7E2	0.115
3113	1071	Sisma X SLD	5.3	0	0	0	2.7E2	0.115	3114	1071	Sisma Y SLD	0	5.3	0	0	2.7E2	0.115
3115	1072	Sisma X SLV	5.5	0	0	0	2.8E2	0.115	3116	1072	Sisma Y SLV	0	5.5	0	0	2.8E2	0.115
3117	1072	Sisma X SLD	5.4	0	0	0	2.8E2	0.115	3118	1072	Sisma Y SLD	0	5.4	0	0	2.8E2	0.115
3119	1073	Sisma X SLV	5.5	0	0	0	2.8E2	0.115	3120	1073	Sisma Y SLV	0	5.5	0	0	2.8E2	0.115
3121	1073	Sisma X SLD	5.5	0	0	0	2.8E2	0.115	3122	1073	Sisma Y SLD	0	5.5	0	0	2.8E2	0.115
3123	1074	Sisma X SLV	5.4	0	0	0	275.78	0.115	3124	1074	Sisma Y SLV	0	5.4	0	0	275.78	0.115
3125	1074	Sisma X SLD	5.3	0	0	0	275.78	0.115	3126	1074	Sisma Y SLD	0	5.3	0	0	275.78	0.115
3127	1075	Sisma X SLV	5.8	0	0	0	3.0E2	0.116	3128	1075	Sisma Y SLV	0	5.8	0	0	3.0E2	0.116
3129	1075	Sisma X SLD	5.7	0	0	0	3.0E2	0.116	3130	1075	Sisma Y SLD	0	5.7	0	0	3.0E2	0.116
3131	1076	Sisma X SLV	5.4	0	0	0	2.8E2	0.116	3132	1076	Sisma Y SLV	0	5.4	0	0	2.8E2	0.116
3133	1076	Sisma X SLD	5.4	0	0	0	2.8E2	0.116	3134	1076	Sisma Y SLD	0	5.4	0	0	2.8E2	0.116
3135	1077	Sisma X SLV	5.5	0	0	0	2.8E2	0.116	3136	1077	Sisma Y SLV	0	5.5	0	0	2.8E2	0.116
3137	1077	Sisma X SLD	5.5	0	0	0	2.8E2	0.116	3138	1077	Sisma Y SLD	0	5.5	0	0	2.8E2	0.116
3139	1078	Sisma X SLV	5.4	0	0	0	2.8E2	0.116	3140	1078	Sisma Y SLV	0	5.4	0	0	2.8E2	0.116
3141	1078	Sisma X SLD	5.4	0	0	0	2.8E2	0.116	3142	1078	Sisma Y SLD	0	5.4	0	0	2.8E2	0.116
3143	1079	Sisma X SLV	5.5	0	0	0	2.8E2	0.116	3144	1079	Sisma Y SLV	0	5.5	0	0	2.8E2	0.116
3145	1079	Sisma X SLD	5.5	0	0	0	2.8E2	0.116	3146	1079	Sisma Y SLD	0	5.5	0	0	2.8E2	0.116
3147	1080	Sisma X SLV	5.4	0	0	0	2.8E2	0.116	3148	1080	Sisma Y SLV	0	5.4	0	0	2.8E2	0.116
3149	1080	Sisma X SLD	5.4	0	0	0	2.8E2	0.116	3150	1080	Sisma Y SLD	0	5.4	0	0	2.8E2	0.116
3151	1081	Sisma X SLV	5.3	0	0	0	2.7E2	0.116	3152	1081	Sisma Y SLV	0	5.3	0	0	2.7E2	0.116
3153	1081	Sisma X SLD	5.2	0	0	0	2.7E2	0.116	3154	1081	Sisma Y SLD	0	5.2	0	0	2.7E2	0.116
3155	1082	Sisma X SLV	9.5	0	0	0	4.8E2	0.116	3156	1082	Sisma Y SLV	0	9.5	0	0	4.8E2	0.116
3157	1082	Sisma X SLD	9.4	0	0	0	4.8E2	0.116	3158	1082	Sisma Y SLD	0	9.4	0	0	4.8E2	0.116
3159	1083	Sisma X SLV	8.7	0	0	0	4.4E2	0.116	3160	1083	Sisma Y SLV	0	8.7	0	0	4.4E2	0.116
3161	1083	Sisma X SLD	8.6	0	0	0	4.4E2	0.116	3162	1083	Sisma Y SLD	0	8.6	0	0	4.4E2	0.116
3163	1084	Sisma X SLV	5.5	0	0	0	281.27	0.116	3164	1084	Sisma Y SLV	0	5.5	0	0	281.27	0.116
3165	1084	Sisma X SLD	5.5	0	0	0	281.27	0.116	3166	1084	Sisma Y SLD	0	5.5	0	0	281.27	0.116
3167	1085	Sisma X SLV	5.3	0	0	0	2.7E2	0.116	3168	1085	Sisma Y SLV	0	5.3	0	0	2.7E2	0.116
3169	1085	Sisma X SLD	5.2	0	0	0	2.7E2	0.116	3170	1085	Sisma Y SLD	0	5.2	0	0	2.7E2	0.116
3171	1086	Sisma X SLV	6.3	0	0	0	3.2E2	0.116	3172	1086	Sisma Y SLV	0	6.3	0	0	3.2E2	0.116
3173	1086	Sisma X SLD	6.2	0	0	0	3.2E2	0.116	3174	1086	Sisma Y SLD	0	6.2	0	0	3.2E2	0.116
3175	1087	Sisma X SLV	6.3	0	0	0	3.2E2	0.116	3176	1087	Sisma Y SLV	0	6.3	0	0	3.2E2	0.116
3177	1087	Sisma X SLD	6.2	0	0	0	3.2E2	0.116	3178	1087	Sisma Y SLD	0	6.2	0	0	3.2E2	0.116
3179	1088	Sisma X SLV	6.3	0	0	0	3.2E2	0.116	3180	1088	Sisma Y SLV	0	6.3	0	0	3.2E2	0.116
3181	1088	Sisma X SLD	6.2	0	0	0	3.2E2	0.116	3182	1088	Sisma Y SLD	0	6.2	0	0	3.2E2	0.116

Indice	Nodo	Condizione	Fx	Fy	Fz	Mz	Peso	Gamma	Indice	Nodo	Condizione	Fx	Fy	Fz	Mz	Peso	Gamma
3183	1089	Sisma X SLV	6.3	0	0	0	3.2E2	0.116	3184	1089	Sisma Y SLV	0	6.3	0	0	3.2E2	0.116
3185	1089	Sisma X SLD	6.2	0	0	0	3.2E2	0.116	3186	1089	Sisma Y SLD	0	6.2	0	0	3.2E2	0.116
3187	1090	Sisma X SLV	6.4	0	0	0	3.2E2	0.116	3188	1090	Sisma Y SLV	0	6.4	0	0	3.2E2	0.116
3189	1090	Sisma X SLD	6.3	0	0	0	3.2E2	0.116	3190	1090	Sisma Y SLD	0	6.3	0	0	3.2E2	0.116
3191	1091	Sisma X SLV	6.4	0	0	0	3.2E2	0.116	3192	1091	Sisma Y SLV	0	6.4	0	0	3.2E2	0.116
3193	1091	Sisma X SLD	6.3	0	0	0	3.2E2	0.116	3194	1091	Sisma Y SLD	0	6.3	0	0	3.2E2	0.116
3195	1092	Sisma X SLV	6.5	0	0	0	3.3E2	0.116	3196	1092	Sisma Y SLV	0	6.5	0	0	3.3E2	0.116
3197	1092	Sisma X SLD	6.4	0	0	0	3.3E2	0.116	3198	1092	Sisma Y SLD	0	6.4	0	0	3.3E2	0.116
3199	1093	Sisma X SLV	6.5	0	0	0	3.3E2	0.116	3200	1093	Sisma Y SLV	0	6.5	0	0	3.3E2	0.116
3201	1093	Sisma X SLD	6.4	0	0	0	3.3E2	0.116	3202	1093	Sisma Y SLD	0	6.4	0	0	3.3E2	0.116
3203	1094	Sisma X SLV	6.5	0	0	0	3.3E2	0.116	3204	1094	Sisma Y SLV	0	6.5	0	0	3.3E2	0.116
3205	1094	Sisma X SLD	6.4	0	0	0	3.3E2	0.116	3206	1094	Sisma Y SLD	0	6.4	0	0	3.3E2	0.116
3207	1095	Sisma X SLV	6.5	0	0	0	3.3E2	0.116	3208	1095	Sisma Y SLV	0	6.5	0	0	3.3E2	0.116
3209	1095	Sisma X SLD	6.4	0	0	0	3.3E2	0.116	3210	1095	Sisma Y SLD	0	6.4	0	0	3.3E2	0.116
3211	1096	Sisma X SLV	6.6	0	0	0	3.3E2	0.116	3212	1096	Sisma Y SLV	0	6.6	0	0	3.3E2	0.116
3213	1096	Sisma X SLD	6.4	0	0	0	3.3E2	0.116	3214	1096	Sisma Y SLD	0	6.4	0	0	3.3E2	0.116
3215	1097	Sisma X SLV	6.6	0	0	0	3.3E2	0.116	3216	1097	Sisma Y SLV	0	6.6	0	0	3.3E2	0.116
3217	1097	Sisma X SLD	6.4	0	0	0	3.3E2	0.116	3218	1097	Sisma Y SLD	0	6.4	0	0	3.3E2	0.116
3219	1098	Sisma X SLV	6.6	0	0	0	3.3E2	0.116	3220	1098	Sisma Y SLV	0	6.6	0	0	3.3E2	0.116
3221	1098	Sisma X SLD	6.5	0	0	0	3.3E2	0.116	3222	1098	Sisma Y SLD	0	6.5	0	0	3.3E2	0.116
3223	1099	Sisma X SLV	6.6	0	0	0	3.3E2	0.116	3224	1099	Sisma Y SLV	0	6.6	0	0	3.3E2	0.116
3225	1099	Sisma X SLD	6.5	0	0	0	3.3E2	0.116	3226	1099	Sisma Y SLD	0	6.5	0	0	3.3E2	0.116
3227	1100	Sisma X SLV	6.6	0	0	0	3.3E2	0.116	3228	1100	Sisma Y SLV	0	6.6	0	0	3.3E2	0.116
3229	1100	Sisma X SLD	6.5	0	0	0	3.3E2	0.116	3230	1100	Sisma Y SLD	0	6.5	0	0	3.3E2	0.116
3231	1101	Sisma X SLV	6.6	0	0	0	3.3E2	0.116	3232	1101	Sisma Y SLV	0	6.6	0	0	3.3E2	0.116
3233	1101	Sisma X SLD	6.5	0	0	0	3.3E2	0.116	3234	1101	Sisma Y SLD	0	6.5	0	0	3.3E2	0.116
3235	1102	Sisma X SLV	6.6	0	0	0	3.3E2	0.116	3236	1102	Sisma Y SLV	0	6.6	0	0	3.3E2	0.116
3237	1102	Sisma X SLD	6.5	0	0	0	3.3E2	0.116	3238	1102	Sisma Y SLD	0	6.5	0	0	3.3E2	0.116
3239	1103	Sisma X SLV	6.6	0	0	0	3.3E2	0.116	3240	1103	Sisma Y SLV	0	6.6	0	0	3.3E2	0.116
3241	1103	Sisma X SLD	6.5	0	0	0	3.3E2	0.116	3242	1103	Sisma Y SLD	0	6.5	0	0	3.3E2	0.116
3243	1104	Sisma X SLV	6.6	0	0	0	3.3E2	0.116	3244	1104	Sisma Y SLV	0	6.6	0	0	3.3E2	0.116
3245	1104	Sisma X SLD	6.5	0	0	0	3.3E2	0.116	3246	1104	Sisma Y SLD	0	6.5	0	0	3.3E2	0.116
3247	1105	Sisma X SLV	6.6	0	0	0	3.3E2	0.116	3248	1105	Sisma Y SLV	0	6.6	0	0	3.3E2	0.116
3249	1105	Sisma X SLD	6.5	0	0	0	3.3E2	0.116	3250	1105	Sisma Y SLD	0	6.5	0	0	3.3E2	0.116
3251	1106	Sisma X SLV	6.6	0	0	0	3.3E2	0.116	3252	1106	Sisma Y SLV	0	6.6	0	0	3.3E2	0.116
3253	1106	Sisma X SLD	6.5	0	0	0	3.3E2	0.116	3254	1106	Sisma Y SLD	0	6.5	0	0	3.3E2	0.116
3255	1107	Sisma X SLV	6.6	0	0	0	3.3E2	0.116	3256	1107	Sisma Y SLV	0	6.6	0	0	3.3E2	0.116
3257	1107	Sisma X SLD	6.5	0	0	0	3.3E2	0.116	3258	1107	Sisma Y SLD	0	6.5	0	0	3.3E2	0.116
3259	1108	Sisma X SLV	10.2	0	0	0	5.2E2	0.116	3260	1108	Sisma Y SLV	0	10.2	0	0	5.2E2	0.116
3261	1108	Sisma X SLD	10	0	0	0	5.2E2	0.116	3262	1108	Sisma Y SLD	0	10	0	0	5.2E2	0.116
3263	1109	Sisma X SLV	9.5	0	0	0	4.8E2	0.116	3264	1109	Sisma Y SLV	0	9.5	0	0	4.8E2	0.116
3265	1109	Sisma X SLD	9.3	0	0	0	4.8E2	0.116	3266	1109	Sisma Y SLD	0	9.3	0	0	4.8E2	0.116
3267	1110	Sisma X SLV	6.4	0	0	0	3.2E2	0.116	3268	1110	Sisma Y SLV	0	6.4	0	0	3.2E2	0.116
3269	1110	Sisma X SLD	6.3	0	0	0	3.2E2	0.116	3270	1110	Sisma Y SLD	0	6.3	0	0	3.2E2	0.116
3271	1111	Sisma X SLV	6.4	0	0	0	3.2E2	0.116	3272	1111	Sisma Y SLV	0	6.4	0	0	3.2E2	0.116
3273	1111	Sisma X SLD	6.3	0	0	0	3.2E2	0.116	3274	1111	Sisma Y SLD	0	6.3	0	0	3.2E2	0.116
3275	1112	Sisma X SLV	6.4	0	0	0	3.2E2	0.116	3276	1112	Sisma Y SLV	0	6.4	0	0	3.2E2	0.116
3277	1112	Sisma X SLD	6.3	0	0	0	3.2E2	0.116	3278	1112	Sisma Y SLD	0	6.3	0	0	3.2E2	0.116
3279	1113	Sisma X SLV	6.4	0	0	0	3.2E2	0.116	3280	1113	Sisma Y SLV	0	6.4	0	0	3.2E2	0.116
3281	1113	Sisma X SLD	6.3	0	0	0	3.2E2	0.116	3282	1113	Sisma Y SLD	0	6.3	0	0	3.2E2	0.116
3283	1114	Sisma X SLV	6.4	0	0	0	3.2E2	0.116	3284	1114	Sisma Y SLV	0	6.4	0	0	3.2E2	0.116
3285	1114	Sisma X SLD	6.3	0	0	0	3.2E2	0.116	3286	1114	Sisma Y SLD	0	6.3	0	0	3.2E2	0.116
3287	1115	Sisma X SLV	6.4	0	0	0	3.2E2	0.116	3288	1115	Sisma Y SLV	0	6.4	0	0	3.2E2	0.116
3289	1115	Sisma X SLD	6.3	0	0	0	3.2E2	0.116	3290	1115	Sisma Y SLD	0	6.3	0	0	3.2E2	0.116
3291	1116	Sisma X SLV	6.4	0	0	0	3.2E2	0.116	3292	1116	Sisma Y SLV	0	6.4	0	0	3.2E2	0.116
3293	1116	Sisma X SLD	6.3	0	0	0	3.2E2	0.116	3294	1116	Sisma Y SLD	0	6.3	0	0	3.2E2	0.116
3295	1117	Sisma X SLV	6.4	0	0	0	3.2E2	0.116	3296	1117	Sisma Y SLV	0	6.4	0	0	3.2E2	0.116
3297	1117	Sisma X SLD	6.3	0	0	0	3.2E2	0.116	3298	1117	Sisma Y SLD	0	6.3	0	0	3.2E2	0.116
3299	1118	Sisma X SLV	6.4	0	0	0	3.2E2	0.116	3300	1118	Sisma Y SLV	0	6.4	0	0	3.2E2	0.116
3301	1118	Sisma X SLD	6.3	0	0	0	3.2E2	0.116	3302	1118	Sisma Y SLD	0	6.3	0	0	3.2E2	0.116
3303	1119	Sisma X SLV	6.4	0	0	0	3.2E2	0.116	3304	1119	Sisma Y SLV	0	6.4	0	0	3.2E2	0.116
3305	1119	Sisma X SLD	6.3	0	0	0	3.2E2	0.116	3306	1119	Sisma Y SLD	0	6.3	0	0	3.2E2	0.116
3307	1120	Sisma X SLV	6.4	0	0	0	3.2E2	0.116	3308	1120	Sisma Y SLV	0	6.4	0	0	3.2E2	0.116
3309	1120	Sisma X SLD	6.3	0	0	0	3.2E2	0.116	3310	1120	Sisma Y SLD	0	6.3	0	0	3.2E2	0.116
3311	1121	Sisma X SLV	7	0	0	0	3.5E2	0.116	3312	1121	Sisma Y SLV	0	7	0	0	3.5E2	0.116
3313	1121	Sisma X SLD	6.9	0	0	0	3.5E2	0.116	3314	1121	Sisma Y SLD	0	6.9	0	0	3.5E2	0.116
3315	1122	Sisma X SLV	8.2	0	0	0	4.2E2	0.116	3316	1122	Sisma Y SLV	0	8.2	0	0	4.2E2	0.116
3317	1122	Sisma X SLD	8.1	0	0	0	4.2E2	0.116	3318	1122	Sisma Y SLD	0	8.1	0	0	4.2E2	0.116
3319	1123	Sisma X SLV	8.7	0	0	0	4.4E2	0.116	3320	1123	Sisma Y SLV	0	8.7	0	0	4.4E2	0.116
3321	1123	Sisma X SLD	8.6	0	0	0	4.4E2	0.116	3322	1123	Sisma Y SLD	0	8.6	0	0	4.4E2	0.116
3323	1124	Sisma X SLV	6.9	0	0	0	3.5E2	0.116	3324	1124	Sisma Y SLV	0	6.9	0	0	3.5E2	0.116
3325	1124	Sisma X SLD	6.8	0	0	0	3.5E2	0.116	3326	1124	Sisma Y SLD	0	6.8	0	0	3.5E2	0.116
3327	1125	Sisma X SLV	6.9	0	0	0	3.5E2	0.116	3328	1125	Sisma Y SLV	0	6.9	0	0	3.5E2	0.116
3329	1125	Sisma X SLD	6.8	0	0	0	3.5E2	0.116	3330	1125	Sisma Y SLD	0	6.8	0	0	3.5E2	0.116
3331	1126	Sisma X SLV	6.9	0	0	0	3.5E2	0.116	3332	1126	Sisma Y SLV	0	6.9	0	0	3.5E2	0.116
3333	1126	Sisma X SLD	6.8	0	0	0	3.5E2	0.116	3334	1126	Sisma Y SLD	0	6.8	0	0	3.5E2	0.116
3335	1127	Sisma X SLV	6.9	0	0	0	3.5E2	0.116	3336	1127	Sisma Y SLV	0	6.9	0	0	3.5E2	0.116
3337	1127	Sisma X SLD	6.8	0	0	0	3.5E2	0.116	3338	1127	Sisma Y SLD	0	6.8	0	0	3.5E2	0.116
3339	1128	Sisma X SLV	6.9	0	0	0	3.5E2	0.116	3340	1128	Sisma Y SLV	0	6.9	0	0	3.5E2	0.116
3341	1128	Sisma X SLD	6.8	0	0	0	3.5E2	0.116	3342	1128	Sisma Y SLD	0	6.8	0	0	3.5E2	0.116
3343	1129	Sisma X SLV	6.9	0	0	0	347.74	0.116	3344	1129	Sisma Y SLV	0	6.9	0	0	347.74	0.116
3345	1129	Sisma X SLD	6.7	0	0	0	347.74	0.116	3346	1129	Sisma Y SLD	0	6.7	0	0	347.74	0.116
3347	1130	Sisma X SLV	6.8	0	0	0	3.5E2	0.116	3348	1130	Sisma Y SLV	0	6.8	0	0	3.5E2	0.116
3349	1130	Sisma X SLD	6.7	0	0	0	3.5E2	0.116	3350	1130	Sisma Y SLD	0	6.7	0	0	3.5E2	0.116
3351	1131	Sisma X SLV	6.8	0	0	0	3.4E2	0.116	3352	1131	Sisma Y SLV	0	6.8	0	0	3.4E2	0.116
3353	1131	Sisma X SLD	6.7	0	0	0	3.4E2	0.116	3354	1131	Sisma Y SLD	0	6.7	0	0	3.4E2	0.116
3355	1132	Sisma X SLV	6.8	0	0	0	3.4E2	0.116	3356	1132	Sisma Y SLV	0	6.8	0	0	3.4E2	0.116
3357	1132	Sisma X SLD	6.7	0	0	0	3.4E2	0.116	3358	1132	Sisma Y SLD	0	6.7	0	0	3.4E2	0.116
3359	1133	Sisma X SLV	6.8	0	0	0	3.4E2	0.116	3360	1133	Sisma Y SLV	0	6.8	0	0	3.4E2	0.116
3361	1133	Sisma X SLD	6.7	0	0	0	3.4E2	0.116	3362	1133	Sisma Y SLD	0	6.7	0	0	3.4E2	0.116
3363	1134	Sisma X SLV	5.7	0	0	0	2.9E2	0.116	3364	1134	Sisma Y SLV	0	5.7	0	0	2.9E2	0.116
3365	1134	Sisma X SLD	5.6	0	0	0	2.9E2	0.116	3366	1134	Sisma Y SLD	0	5.6	0	0	2.9E2	0.116
3367	1135	Sisma X SLV	5.4	0	0	0	2.8E2	0.116	3368	1135	Sisma Y SLV	0	5.4	0	0	2.8E2	0.116
3369	1135	Sisma X SLD	5.4	0	0	0	2.8E2	0.116	3370	1135	Sisma Y SLD	0	5.4	0	0	2.8E2	0.116
3371	1136	Sisma X SLV	9.2	0	0	0	4.7E2	0.116	3372	1136	Sisma Y SLV	0	9.2	0	0	4.7E2	0.116
3373	1136	Sisma X SLD	9.1	0	0	0	4.7E2	0.116	3374	1136	Sisma Y SLD	0	9.1	0	0	4.7E2	0.116
3375	1137	Sisma X SLV	9.2	0	0	0	4.7E2	0.116	3376	1137	Sisma Y SLV	0	9.2	0	0	4.7E2	0.116
3377	1137	Sisma X SLD	9.1	0	0	0	4.7E2	0.116	3378	1137	Sisma Y SLD	0	9.1	0	0	4.7E2	0.116
3379	1138	Sisma X SLV	5.6	0	0	0	2.8E2	0.116	3380	1138	Sisma Y SLV	0	5.6	0	0	2.8E2	0.116
3381	1138	Sisma X SLD	5.5	0	0	0	2.8E2	0.116	3382	1138	Sisma Y SLD	0	5.5	0	0	2.8E2	0.116
3383	1139	Sisma X SLV	3	0	0	0	1.5E2	0.117	3384	1139	Sisma Y SLV	0	3	0	0	1.5E2	0.117

Indice	Nodo	Condizione	Fx	Fy	Fz	Mz	Peso	Gamma	Indice	Nodo	Condizione	Fx	Fy	Fz	Mz	Peso	Gamma
3385	1139	Sisma X SLD	2.9	0	0	0	1.5E2	0.117	3386	1139	Sisma Y SLD	0	2.9	0	0	1.5E2	0.117
3387	1140	Sisma X SLV	3	0	0	0	1.5E2	0.117	3388	1140	Sisma Y SLV	0	3	0	0	1.5E2	0.117
3389	1140	Sisma X SLD	2.9	0	0	0	1.5E2	0.117	3390	1140	Sisma Y SLD	0	2.9	0	0	1.5E2	0.117
3391	1141	Sisma X SLV	5.6	0	0	0	2.8E2	0.117	3392	1141	Sisma Y SLV	0	5.6	0	0	2.8E2	0.117
3393	1141	Sisma X SLD	5.6	0	0	0	2.8E2	0.117	3394	1141	Sisma Y SLD	0	5.6	0	0	2.8E2	0.117
3395	1142	Sisma X SLV	5.7	0	0	0	2.8E2	0.118	3396	1142	Sisma Y SLV	0	5.7	0	0	2.8E2	0.118
3397	1142	Sisma X SLD	5.6	0	0	0	2.8E2	0.118	3398	1142	Sisma Y SLD	0	5.6	0	0	2.8E2	0.118
3399	1143	Sisma X SLV	3.3	0	0	0	1.6E2	0.118	3400	1143	Sisma Y SLV	0	3.3	0	0	1.6E2	0.118
3401	1143	Sisma X SLD	3.2	0	0	0	1.6E2	0.118	3402	1143	Sisma Y SLD	0	3.2	0	0	1.6E2	0.118
3403	1144	Sisma X SLV	3.1	0	0	0	1.5E2	0.118	3404	1144	Sisma Y SLV	0	3.1	0	0	1.5E2	0.118
3405	1144	Sisma X SLD	3.1	0	0	0	1.5E2	0.118	3406	1144	Sisma Y SLD	0	3.1	0	0	1.5E2	0.118
3407	1145	Sisma X SLV	6.5	0	0	0	3.2E2	0.118	3408	1145	Sisma Y SLV	0	6.5	0	0	3.2E2	0.118
3409	1145	Sisma X SLD	6.4	0	0	0	3.2E2	0.118	3410	1145	Sisma Y SLD	0	6.4	0	0	3.2E2	0.118
3411	1146	Sisma X SLV	6	0	0	0	3.0E2	0.118	3412	1146	Sisma Y SLV	0	6	0	0	3.0E2	0.118
3413	1146	Sisma X SLD	5.9	0	0	0	3.0E2	0.118	3414	1146	Sisma Y SLD	0	5.9	0	0	3.0E2	0.118
3415	1147	Sisma X SLV	7.4	0	0	0	3.7E2	0.119	3416	1147	Sisma Y SLV	0	7.4	0	0	3.7E2	0.119
3417	1147	Sisma X SLD	7.3	0	0	0	3.7E2	0.119	3418	1147	Sisma Y SLD	0	7.3	0	0	3.7E2	0.119
3419	1148	Sisma X SLV	3.1	0	0	0	1.5E2	0.119	3420	1148	Sisma Y SLV	0	3.1	0	0	1.5E2	0.119
3421	1148	Sisma X SLD	3	0	0	0	1.5E2	0.119	3422	1148	Sisma Y SLD	0	3	0	0	1.5E2	0.119
3423	1149	Sisma X SLV	3.1	0	0	0	1.5E2	0.119	3424	1149	Sisma Y SLV	0	3.1	0	0	1.5E2	0.119
3425	1149	Sisma X SLD	3	0	0	0	1.5E2	0.119	3426	1149	Sisma Y SLD	0	3	0	0	1.5E2	0.119
3427	1150	Sisma X SLV	5.8	0	0	0	2.8E2	0.119	3428	1150	Sisma Y SLV	0	5.8	0	0	2.8E2	0.119
3429	1150	Sisma X SLD	5.7	0	0	0	2.8E2	0.119	3430	1150	Sisma Y SLD	0	5.7	0	0	2.8E2	0.119
3431	1151	Sisma X SLV	6.6	0	0	0	3.2E2	0.12	3432	1151	Sisma Y SLV	0	6.6	0	0	3.2E2	0.12
3433	1151	Sisma X SLD	6.5	0	0	0	3.2E2	0.12	3434	1151	Sisma Y SLD	0	6.5	0	0	3.2E2	0.12
3435	1152	Sisma X SLV	3.5	0	0	0	1.7E2	0.12	3436	1152	Sisma Y SLV	0	3.5	0	0	1.7E2	0.12
3437	1152	Sisma X SLD	3.4	0	0	0	1.7E2	0.12	3438	1152	Sisma Y SLD	0	3.4	0	0	1.7E2	0.12
3439	1153	Sisma X SLV	3.4	0	0	0	1.6E2	0.12	3440	1153	Sisma Y SLV	0	3.4	0	0	1.6E2	0.12
3441	1153	Sisma X SLD	3.3	0	0	0	1.6E2	0.12	3442	1153	Sisma Y SLD	0	3.3	0	0	1.6E2	0.12
3443	1154	Sisma X SLV	3.2	0	0	0	1.6E2	0.121	3444	1154	Sisma Y SLV	0	3.2	0	0	1.6E2	0.121
3445	1154	Sisma X SLD	3.2	0	0	0	1.6E2	0.121	3446	1154	Sisma Y SLD	0	3.2	0	0	1.6E2	0.121
3447	1155	Sisma X SLV	6.7	0	0	0	3.3E2	0.121	3448	1155	Sisma Y SLV	0	6.7	0	0	3.3E2	0.121
3449	1155	Sisma X SLD	6.6	0	0	0	3.3E2	0.121	3450	1155	Sisma Y SLD	0	6.6	0	0	3.3E2	0.121
3451	1156	Sisma X SLV	6.1	0	0	0	3.0E2	0.121	3452	1156	Sisma Y SLV	0	6.1	0	0	3.0E2	0.121
3453	1156	Sisma X SLD	6	0	0	0	3.0E2	0.121	3454	1156	Sisma Y SLD	0	6	0	0	3.0E2	0.121
3455	1157	Sisma X SLV	3.1	0	0	0	1.5E2	0.121	3456	1157	Sisma Y SLV	0	3.1	0	0	1.5E2	0.121
3457	1157	Sisma X SLD	3.1	0	0	0	1.5E2	0.121	3458	1157	Sisma Y SLD	0	3.1	0	0	1.5E2	0.121
3459	1158	Sisma X SLV	3.1	0	0	0	1.5E2	0.121	3460	1158	Sisma Y SLV	0	3.1	0	0	1.5E2	0.121
3461	1158	Sisma X SLD	3.1	0	0	0	1.5E2	0.121	3462	1158	Sisma Y SLD	0	3.1	0	0	1.5E2	0.121
3463	1159	Sisma X SLV	5.9	0	0	0	2.9E2	0.121	3464	1159	Sisma Y SLV	0	5.9	0	0	2.9E2	0.121
3465	1159	Sisma X SLD	5.8	0	0	0	2.9E2	0.121	3466	1159	Sisma Y SLD	0	5.8	0	0	2.9E2	0.121
3467	1160	Sisma X SLV	7.7	0	0	0	3.7E2	0.122	3468	1160	Sisma Y SLV	0	7.7	0	0	3.7E2	0.122
3469	1160	Sisma X SLD	7.6	0	0	0	3.7E2	0.122	3470	1160	Sisma Y SLD	0	7.6	0	0	3.7E2	0.122
3471	1161	Sisma X SLV	3.5	0	0	0	1.7E2	0.122	3472	1161	Sisma Y SLV	0	3.5	0	0	1.7E2	0.122
3473	1161	Sisma X SLD	3.4	0	0	0	1.7E2	0.122	3474	1161	Sisma Y SLD	0	3.4	0	0	1.7E2	0.122
3475	1162	Sisma X SLV	6.1	0	0	0	2.9E2	0.122	3476	1162	Sisma Y SLV	0	6.1	0	0	2.9E2	0.122
3477	1162	Sisma X SLD	6	0	0	0	2.9E2	0.122	3478	1162	Sisma Y SLD	0	6	0	0	2.9E2	0.122
3479	1163	Sisma X SLV	2.4	0	0	0	1.1E2	0.123	3480	1163	Sisma Y SLV	0	2.4	0	0	1.1E2	0.123
3481	1163	Sisma X SLD	2.3	0	0	0	1.1E2	0.123	3482	1163	Sisma Y SLD	0	2.3	0	0	1.1E2	0.123
3483	1164	Sisma X SLV	3.2	0	0	0	1.5E2	0.123	3484	1164	Sisma Y SLV	0	3.2	0	0	1.5E2	0.123
3485	1164	Sisma X SLD	3.1	0	0	0	1.5E2	0.123	3486	1164	Sisma Y SLD	0	3.1	0	0	1.5E2	0.123
3487	1165	Sisma X SLV	3.2	0	0	0	1.5E2	0.123	3488	1165	Sisma Y SLV	0	3.2	0	0	1.5E2	0.123
3489	1165	Sisma X SLD	3.1	0	0	0	1.5E2	0.123	3490	1165	Sisma Y SLD	0	3.1	0	0	1.5E2	0.123
3491	1166	Sisma X SLV	2.7	0	0	0	1.3E2	0.123	3492	1166	Sisma Y SLV	0	2.7	0	0	1.3E2	0.123
3493	1166	Sisma X SLD	2.7	0	0	0	1.3E2	0.123	3494	1166	Sisma Y SLD	0	2.7	0	0	1.3E2	0.123
3495	1167	Sisma X SLV	6.1	0	0	0	2.9E2	0.123	3496	1167	Sisma Y SLV	0	6.1	0	0	2.9E2	0.123
3497	1167	Sisma X SLD	6	0	0	0	2.9E2	0.123	3498	1167	Sisma Y SLD	0	6	0	0	2.9E2	0.123
3499	1168	Sisma X SLV	3.3	0	0	0	1.6E2	0.124	3500	1168	Sisma Y SLV	0	3.3	0	0	1.6E2	0.124
3501	1168	Sisma X SLD	3.3	0	0	0	1.6E2	0.124	3502	1168	Sisma Y SLD	0	3.3	0	0	1.6E2	0.124
3503	1169	Sisma X SLV	7	0	0	0	330.75	0.124	3504	1169	Sisma Y SLV	0	7	0	0	330.75	0.124
3505	1169	Sisma X SLD	6.9	0	0	0	330.75	0.124	3506	1169	Sisma Y SLD	0	6.9	0	0	330.75	0.124
3507	1170	Sisma X SLV	6.3	0	0	0	299.04	0.124	3508	1170	Sisma Y SLV	0	6.3	0	0	299.04	0.124
3509	1170	Sisma X SLD	6.2	0	0	0	299.04	0.124	3510	1170	Sisma Y SLD	0	6.2	0	0	299.04	0.124
3511	1171	Sisma X SLV	6.9	0	0	0	3.3E2	0.124	3512	1171	Sisma Y SLV	0	6.9	0	0	3.3E2	0.124
3513	1171	Sisma X SLD	6.8	0	0	0	3.3E2	0.124	3514	1171	Sisma Y SLD	0	6.8	0	0	3.3E2	0.124
3515	1172	Sisma X SLV	3.7	0	0	0	1.7E2	0.124	3516	1172	Sisma Y SLV	0	3.7	0	0	1.7E2	0.124
3517	1172	Sisma X SLD	3.6	0	0	0	1.7E2	0.124	3518	1172	Sisma Y SLD	0	3.6	0	0	1.7E2	0.124
3519	1173	Sisma X SLV	1.9	0	0	0	88.162	0.124	3520	1173	Sisma Y SLV	0	1.9	0	0	88.162	0.124
3521	1173	Sisma X SLD	1.8	0	0	0	88.162	0.124	3522	1173	Sisma Y SLD	0	1.8	0	0	88.162	0.124
3523	1174	Sisma X SLV	3.3	0	0	0	1.5E2	0.125	3524	1174	Sisma Y SLV	0	3.3	0	0	1.5E2	0.125
3525	1174	Sisma X SLD	3.2	0	0	0	1.5E2	0.125	3526	1174	Sisma Y SLD	0	3.2	0	0	1.5E2	0.125
3527	1175	Sisma X SLV	3.3	0	0	0	1.5E2	0.125	3528	1175	Sisma Y SLV	0	3.3	0	0	1.5E2	0.125
3529	1175	Sisma X SLD	3.2	0	0	0	1.5E2	0.125	3530	1175	Sisma Y SLD	0	3.2	0	0	1.5E2	0.125
3531	1176	Sisma X SLV	3.6	0	0	0	1.7E2	0.125	3532	1176	Sisma Y SLV	0	3.6	0	0	1.7E2	0.125
3533	1176	Sisma X SLD	3.5	0	0	0	1.7E2	0.125	3534	1176	Sisma Y SLD	0	3.5	0	0	1.7E2	0.125
3535	1177	Sisma X SLV	3.3	0	0	0	1.5E2	0.125	3536	1177	Sisma Y SLV	0	3.3	0	0	1.5E2	0.125
3537	1177	Sisma X SLD	3.2	0	0	0	1.5E2	0.125	3538	1177	Sisma Y SLD	0	3.2	0	0	1.5E2	0.125
3539	1178	Sisma X SLV	3.3	0	0	0	1.5E2	0.125	3540	1178	Sisma Y SLV	0	3.3	0	0	1.5E2	0.125
3541	1178	Sisma X SLD	3.2	0	0	0	1.5E2	0.125	3542	1178	Sisma Y SLD	0	3.2	0	0	1.5E2	0.125
3543	1179	Sisma X SLV	8.1	0	0	0	3.8E2	0.126	3544	1179	Sisma Y SLV	0	8.1	0	0	3.8E2	0.126
3545	1179	Sisma X SLD	8	0	0	0	3.8E2	0.126	3546	1179	Sisma Y SLD	0	8	0	0	3.8E2	0.126
3547	1180	Sisma X SLV	6.2	0	0	0	2.9E2	0.126	3548	1180	Sisma Y SLV	0	6.2	0	0	2.9E2	0.126
3549	1180	Sisma X SLD	6.1	0	0	0	2.9E2	0.126	3550	1180	Sisma Y SLD	0	6.1	0	0	2.9E2	0.126
3551	1181	Sisma X SLV	4.1	0	0	0	1.9E2	0.127	3552	1181	Sisma Y SLV	0	4.1	0	0	1.9E2	0.127
3553	1181	Sisma X SLD	4.1	0	0	0	1.9E2	0.127	3554	1181	Sisma Y SLD	0	4.1	0	0	1.9E2	0.127
3555	1182	Sisma X SLV	3.5	0	0	0	1.6E2	0.127	3556	1182	Sisma Y SLV	0	3.5	0	0	1.6E2	0.127
3557	1182	Sisma X SLD	3.4	0	0	0	1.6E2	0.127	3558	1182	Sisma Y SLD	0	3.4	0	0	1.6E2	0.127
3559	1183	Sisma X SLV	7.3	0	0	0	3.4E2	0.127	3560	1183	Sisma Y SLV	0	7.3	0	0	3.4E2	0.127
3561	1183	Sisma X SLD	7.1	0	0	0	3.4E2	0.127	3562	1183	Sisma Y SLD	0	7.1	0	0	3.4E2	0.127
3563	1184	Sisma X SLV	6.5	0	0	0	300.76	0.127	3564	1184	Sisma Y SLV	0	6.5	0	0	300.76	0.127
3565	1184	Sisma X SLD	6.4	0	0	0	300.76	0.127	3566	1184	Sisma Y SLD	0	6.4	0	0	300.76	0.127
3567	1185	Sisma X SLV	8.3	0	0	0	3.8E2	0.127	3568	1185	Sisma Y SLV	0	8.3	0	0	3.8E2	0.127
3569	1185	Sisma X SLD	8.1	0	0	0	3.8E2	0.127	3570	1185	Sisma Y SLD	0	8.1	0	0	3.8E2	0.127
3571	1186	Sisma X SLV	9.2	0	0	0	426.22	0.127	3572	1186	Sisma Y SLV	0	9.2	0	0	426.22	0.127
3573	1186	Sisma X SLD	9.1	0	0	0	426.22	0.127	3574	1186	Sisma Y SLD	0	9.1	0	0	426.22	0.127
3575	1187	Sisma X SLV	9.2	0	0	0	4.2E2	0.127	3576	1187	Sisma Y SLV	0	9.2	0	0	4.2E2	0.127
3577	1187	Sisma X SLD	9	0	0	0	4.2E2	0.127	3578	1187	Sisma Y SLD	0	9	0	0	4.2E2	0.127
3579	1188	Sisma X SLV	6.4	0	0	0	2.9E2	0.127	3580	1188	Sisma Y SLV	0	6.4	0	0	2.9E2	0.127
3581	1188	Sisma X SLD	6.3	0	0	0	2.9E2	0.127	3582	1188	Sisma Y SLD	0	6.3	0	0	2.9E2	0.127
3583	1189	Sisma X SLV	3.7	0	0	0	1.7E2	0.128	3584	1189	Sisma Y SLV	0	3.7	0	0	1.7E2	0.128
3585	1189	Sisma X SLD	3.6	0	0	0	1.7E2	0.128	3586	1189	Sisma Y SLD	0	3.6	0	0	1.7E2	0.128
3587	1190	Sisma X SLV	6.6	0	0	0	3.0E2	0.128	3588	1190	Sisma Y SLV	0	6.6	0	0	3.0E2	0.128
3589	1190	Sisma X SLD	6.5	0	0	0	3.0E2	0.128	3590	1190	Sisma Y SLD	0	6.5	0	0	3.0E2	0.128
3591	1191	Sisma X SLV	3.4	0	0	0	155.81	0.128	3592	1191	Sisma Y SLV	0	3.4	0	0	155.81	0.128

muratura

Indice	Nodo	Condizione	Fx	Fy	Fz	Mz	Peso	Gamma	Indice	Nodo	Condizione	Fx	Fy	Fz	Mz	Peso	Gamma
3593	1191	Sisma X SLD	3.4	0	0	0	155.81	0.128	3594	1191	Sisma Y SLD	0	3.4	0	0	155.81	0.128
3595	1192	Sisma X SLV	3.4	0	0	0	155.81	0.128	3596	1192	Sisma Y SLV	0	3.4	0	0	155.81	0.128
3597	1192	Sisma X SLD	3.4	0	0	0	155.81	0.128	3598	1192	Sisma Y SLD	0	3.4	0	0	155.81	0.128
3599	1193	Sisma X SLV	6.5	0	0	0	2.9E2	0.128	3600	1193	Sisma Y SLV	0	6.5	0	0	2.9E2	0.128
3601	1193	Sisma X SLD	6.4	0	0	0	2.9E2	0.128	3602	1193	Sisma Y SLD	0	6.4	0	0	2.9E2	0.128
3603	1194	Sisma X SLV	7.4	0	0	0	3.4E2	0.129	3604	1194	Sisma Y SLV	0	7.4	0	0	3.4E2	0.129
3605	1194	Sisma X SLD	7.2	0	0	0	3.4E2	0.129	3606	1194	Sisma Y SLD	0	7.2	0	0	3.4E2	0.129
3607	1195	Sisma X SLV	3.9	0	0	0	1.8E2	0.129	3608	1195	Sisma Y SLV	0	3.9	0	0	1.8E2	0.129
3609	1195	Sisma X SLD	3.8	0	0	0	1.8E2	0.129	3610	1195	Sisma Y SLD	0	3.8	0	0	1.8E2	0.129
3611	1196	Sisma X SLV	8.6	0	0	0	3.9E2	0.13	3612	1196	Sisma Y SLV	0	8.6	0	0	3.9E2	0.13
3613	1196	Sisma X SLD	8.5	0	0	0	3.9E2	0.13	3614	1196	Sisma Y SLD	0	8.5	0	0	3.9E2	0.13
3615	1197	Sisma X SLV	2.4	0	0	0	1.1E2	0.13	3616	1197	Sisma Y SLV	0	2.4	0	0	1.1E2	0.13
3617	1197	Sisma X SLD	2.4	0	0	0	1.1E2	0.13	3618	1197	Sisma Y SLD	0	2.4	0	0	1.1E2	0.13
3619	1198	Sisma X SLV	3.6	0	0	0	1.6E2	0.13	3620	1198	Sisma Y SLV	0	3.6	0	0	1.6E2	0.13
3621	1198	Sisma X SLD	3.6	0	0	0	1.6E2	0.13	3622	1198	Sisma Y SLD	0	3.6	0	0	1.6E2	0.13
3623	1199	Sisma X SLV	7.6	0	0	0	3.4E2	0.13	3624	1199	Sisma Y SLV	0	7.6	0	0	3.4E2	0.13
3625	1199	Sisma X SLD	7.5	0	0	0	3.4E2	0.13	3626	1199	Sisma Y SLD	0	7.5	0	0	3.4E2	0.13
3627	1200	Sisma X SLV	6.8	0	0	0	3.0E2	0.131	3628	1200	Sisma Y SLV	0	6.8	0	0	3.0E2	0.131
3629	1200	Sisma X SLD	6.7	0	0	0	3.0E2	0.131	3630	1200	Sisma Y SLD	0	6.7	0	0	3.0E2	0.131
3631	1201	Sisma X SLV	3	0	0	0	133.27	0.131	3632	1201	Sisma Y SLV	0	3	0	0	133.27	0.131
3633	1201	Sisma X SLD	2.9	0	0	0	133.27	0.131	3634	1201	Sisma Y SLD	0	2.9	0	0	133.27	0.131
3635	1202	Sisma X SLV	3.9	0	0	0	1.7E2	0.131	3636	1202	Sisma Y SLV	0	3.9	0	0	1.7E2	0.131
3637	1202	Sisma X SLD	3.8	0	0	0	1.7E2	0.131	3638	1202	Sisma Y SLD	0	3.8	0	0	1.7E2	0.131
3639	1203	Sisma X SLV	3.5	0	0	0	1.6E2	0.131	3640	1203	Sisma Y SLV	0	3.5	0	0	1.6E2	0.131
3641	1203	Sisma X SLD	3.5	0	0	0	1.6E2	0.131	3642	1203	Sisma Y SLD	0	3.5	0	0	1.6E2	0.131
3643	1204	Sisma X SLV	3.5	0	0	0	1.6E2	0.131	3644	1204	Sisma Y SLV	0	3.5	0	0	1.6E2	0.131
3645	1204	Sisma X SLD	3.5	0	0	0	1.6E2	0.131	3646	1204	Sisma Y SLD	0	3.5	0	0	1.6E2	0.131
3647	1205	Sisma X SLV	6.7	0	0	0	3.0E2	0.131	3648	1205	Sisma Y SLV	0	6.7	0	0	3.0E2	0.131
3649	1205	Sisma X SLD	6.6	0	0	0	3.0E2	0.131	3650	1205	Sisma Y SLD	0	6.6	0	0	3.0E2	0.131
3651	1206	Sisma X SLV	2.6	0	0	0	1.2E2	0.132	3652	1206	Sisma Y SLV	0	2.6	0	0	1.2E2	0.132
3653	1206	Sisma X SLD	2.6	0	0	0	1.2E2	0.132	3654	1206	Sisma Y SLD	0	2.6	0	0	1.2E2	0.132
3655	1207	Sisma X SLV	7.1	0	0	0	3.1E2	0.133	3656	1207	Sisma Y SLV	0	7.1	0	0	3.1E2	0.133
3657	1207	Sisma X SLD	7	0	0	0	3.1E2	0.133	3658	1207	Sisma Y SLD	0	7	0	0	3.1E2	0.133
3659	1208	Sisma X SLV	7.8	0	0	0	3.4E2	0.134	3660	1208	Sisma Y SLV	0	7.8	0	0	3.4E2	0.134
3661	1208	Sisma X SLD	7.7	0	0	0	3.4E2	0.134	3662	1208	Sisma Y SLD	0	7.7	0	0	3.4E2	0.134
3663	1209	Sisma X SLV	4.1	0	0	0	1.8E2	0.134	3664	1209	Sisma Y SLV	0	4.1	0	0	1.8E2	0.134
3665	1209	Sisma X SLD	4.1	0	0	0	1.8E2	0.134	3666	1209	Sisma Y SLD	0	4.1	0	0	1.8E2	0.134
3667	1210	Sisma X SLV	9.1	0	0	0	399.01	0.134	3668	1210	Sisma Y SLV	0	9.1	0	0	399.01	0.134
3669	1210	Sisma X SLD	9	0	0	0	399.01	0.134	3670	1210	Sisma Y SLD	0	9	0	0	399.01	0.134
3671	1211	Sisma X SLV	3.6	0	0	0	1.6E2	0.134	3672	1211	Sisma Y SLV	0	3.6	0	0	1.6E2	0.134
3673	1211	Sisma X SLD	3.6	0	0	0	1.6E2	0.134	3674	1211	Sisma Y SLD	0	3.6	0	0	1.6E2	0.134
3675	1212	Sisma X SLV	3.8	0	0	0	166.19	0.134	3676	1212	Sisma Y SLV	0	3.8	0	0	166.19	0.134
3677	1212	Sisma X SLD	3.8	0	0	0	166.19	0.134	3678	1212	Sisma Y SLD	0	3.8	0	0	166.19	0.134
3679	1213	Sisma X SLV	8	0	0	0	3.5E2	0.134	3680	1213	Sisma Y SLV	0	8	0	0	3.5E2	0.134
3681	1213	Sisma X SLD	7.9	0	0	0	3.5E2	0.134	3682	1213	Sisma Y SLD	0	7.9	0	0	3.5E2	0.134
3683	1214	Sisma X SLV	7.1	0	0	0	3.1E2	0.135	3684	1214	Sisma Y SLV	0	7.1	0	0	3.1E2	0.135
3685	1214	Sisma X SLD	7	0	0	0	3.1E2	0.135	3686	1214	Sisma Y SLD	0	7	0	0	3.1E2	0.135
3687	1215	Sisma X SLV	4.1	0	0	0	1.8E2	0.135	3688	1215	Sisma Y SLV	0	4.1	0	0	1.8E2	0.135
3689	1215	Sisma X SLD	4	0	0	0	1.8E2	0.135	3690	1215	Sisma Y SLD	0	4	0	0	1.8E2	0.135
3691	1216	Sisma X SLV	1.6	0	0	0	70.973	0.135	3692	1216	Sisma Y SLV	0	1.6	0	0	70.973	0.135
3693	1216	Sisma X SLD	1.6	0	0	0	70.973	0.135	3694	1216	Sisma Y SLD	0	1.6	0	0	70.973	0.135
3695	1217	Sisma X SLV	3.7	0	0	0	1.6E2	0.135	3696	1217	Sisma Y SLV	0	3.7	0	0	1.6E2	0.135
3697	1217	Sisma X SLD	3.7	0	0	0	1.6E2	0.135	3698	1217	Sisma Y SLD	0	3.7	0	0	1.6E2	0.135
3699	1218	Sisma X SLV	3.7	0	0	0	1.6E2	0.135	3700	1218	Sisma Y SLV	0	3.7	0	0	1.6E2	0.135
3701	1218	Sisma X SLD	3.7	0	0	0	1.6E2	0.135	3702	1218	Sisma Y SLD	0	3.7	0	0	1.6E2	0.135
3703	1219	Sisma X SLV	7	0	0	0	3.1E2	0.135	3704	1219	Sisma Y SLV	0	7	0	0	3.1E2	0.135
3705	1219	Sisma X SLD	6.9	0	0	0	3.1E2	0.135	3706	1219	Sisma Y SLD	0	6.9	0	0	3.1E2	0.135
3707	1220	Sisma X SLV	5	0	0	0	2.1E2	0.137	3708	1220	Sisma Y SLV	0	5	0	0	2.1E2	0.137
3709	1220	Sisma X SLD	4.9	0	0	0	2.1E2	0.137	3710	1220	Sisma Y SLD	0	4.9	0	0	2.1E2	0.137
3711	1221	Sisma X SLV	2.8	0	0	0	1.2E2	0.137	3712	1221	Sisma Y SLV	0	2.8	0	0	1.2E2	0.137
3713	1221	Sisma X SLD	2.7	0	0	0	1.2E2	0.137	3714	1221	Sisma Y SLD	0	2.7	0	0	1.2E2	0.137
3715	1222	Sisma X SLV	2.2	0	0	0	92.264	0.137	3716	1222	Sisma Y SLV	0	2.2	0	0	92.264	0.137
3717	1222	Sisma X SLD	2.1	0	0	0	92.264	0.137	3718	1222	Sisma Y SLD	0	2.1	0	0	92.264	0.137
3719	1223	Sisma X SLV	3.1	0	0	0	1.3E2	0.138	3720	1223	Sisma Y SLV	0	3.1	0	0	1.3E2	0.138
3721	1223	Sisma X SLD	3.1	0	0	0	1.3E2	0.138	3722	1223	Sisma Y SLD	0	3.1	0	0	1.3E2	0.138
3723	1224	Sisma X SLV	4.6	0	0	0	2.0E2	0.139	3724	1224	Sisma Y SLV	0	4.6	0	0	2.0E2	0.139
3725	1224	Sisma X SLD	4.6	0	0	0	2.0E2	0.139	3726	1224	Sisma Y SLD	0	4.6	0	0	2.0E2	0.139
3727	1225	Sisma X SLV	3.7	0	0	0	1.6E2	0.139	3728	1225	Sisma Y SLV	0	3.7	0	0	1.6E2	0.139
3729	1225	Sisma X SLD	3.7	0	0	0	1.6E2	0.139	3730	1225	Sisma Y SLD	0	3.7	0	0	1.6E2	0.139
3731	1226	Sisma X SLV	1.3	0	0	0	54.845	0.139	3732	1226	Sisma Y SLV	0	1.3	0	0	54.845	0.139
3733	1226	Sisma X SLD	1.3	0	0	0	54.845	0.139	3734	1226	Sisma Y SLD	0	1.3	0	0	54.845	0.139
3735	1227	Sisma X SLV	1.6	0	0	0	69.264	0.139	3736	1227	Sisma Y SLV	0	1.6	0	0	69.264	0.139
3737	1227	Sisma X SLD	1.6	0	0	0	69.264	0.139	3738	1227	Sisma Y SLD	0	1.6	0	0	69.264	0.139
3739	1228	Sisma X SLV	2.2	0	0	0	91.803	0.139	3740	1228	Sisma Y SLV	0	2.2	0	0	91.803	0.139
3741	1228	Sisma X SLD	2.1	0	0	0	91.803	0.139	3742	1228	Sisma Y SLD	0	2.1	0	0	91.803	0.139
3743	1229	Sisma X SLV	2	0	0	0	83.824	0.139	3744	1229	Sisma Y SLV	0	2	0	0	83.824	0.139
3745	1229	Sisma X SLD	2	0	0	0	83.824	0.139	3746	1229	Sisma Y SLD	0	2	0	0	83.824	0.139
3747	1230	Sisma X SLV	1.9	0	0	0	81.916	0.139	3748	1230	Sisma Y SLV	0	1.9	0	0	81.916	0.139
3749	1230	Sisma X SLD	1.9	0	0	0	81.916	0.139	3750	1230	Sisma Y SLD	0	1.9	0	0	81.916	0.139
3751	1231	Sisma X SLV	1.9	0	0	0	80.259	0.139	3752	1231	Sisma Y SLV	0	1.9	0	0	80.259	0.139
3753	1231	Sisma X SLD	1.9	0	0	0	80.259	0.139	3754	1231	Sisma Y SLD	0	1.9	0	0	80.259	0.139
3755	1232	Sisma X SLV	5.2	0	0	0	2.2E2	0.139	3756	1232	Sisma Y SLV	0	5.2	0	0	2.2E2	0.139
3757	1232	Sisma X SLD	5.2	0	0	0	2.2E2	0.139	3758	1232	Sisma Y SLD	0	5.2	0	0	2.2E2	0.139
3759	1233	Sisma X SLV	2.9	0	0	0	1.2E2	0.139	3760	1233	Sisma Y SLV	0	2.9	0	0	1.2E2	0.139
3761	1233	Sisma X SLD	2.9	0	0	0	1.2E2	0.139	3762	1233	Sisma Y SLD	0	2.9	0	0	1.2E2	0.139
3763	1234	Sisma X SLV	4.2	0	0	0	176.68	0.139	3764	1234	Sisma Y SLV	0	4.2	0	0	176.68	0.139
3765	1234	Sisma X SLD	4.1	0	0	0	176.68	0.139	3766	1234	Sisma Y SLD	0	4.1	0	0	176.68	0.139
3767	1235	Sisma X SLV	1.6	0	0	0	67.709	0.139	3768	1235	Sisma Y SLV	0	1.6	0	0	67.709	0.139
3769	1235	Sisma X SLD	1.6	0	0	0	67.709	0.139	3770	1235	Sisma Y SLD	0	1.6	0	0	67.709	0.139
3771	1236	Sisma X SLV	2.1	0	0	0	89.084	0.139	3772	1236	Sisma Y SLV	0	2.1	0	0	89.084	0.139
3773	1236	Sisma X SLD	2.1	0	0	0	89.084	0.139	3774	1236	Sisma Y SLD	0	2.1	0	0	89.084	0.139
3775	1237	Sisma X SLV	1.9	0	0	0	81.916	0.139	3776	1237	Sisma Y SLV	0	1.9	0	0	81.916	0.139
3777	1237	Sisma X SLD	1.9	0	0	0	81.916	0.139	3778	1237	Sisma Y SLD	0	1.9	0	0	81.916	0.139
3779	1238	Sisma X SLV	1.9	0	0	0	80.259	0.139	3780	1238	Sisma Y SLV	0	1.9	0	0	80.259	0.139
3781	1238	Sisma X SLD	1.9	0	0	0	80.259	0.139	3782	1238	Sisma Y SLD	0	1.9	0	0	80.259	0.139
3783	1239	Sisma X SLV	5.1	0	0	0	2.2E2	0.139	3784	1239	Sisma Y SLV	0	5.1	0	0	2.2E2	0.139
3785	1239	Sisma X SLD	5.1	0	0	0	2.2E2	0.139	3786	1239	Sisma Y SLD	0	5.1	0	0	2.2E2	0.139
3787	1240	Sisma X SLV	4.8	0	0	0	2.0E2	0.139	3788	1240	Sisma Y SLV	0	4.8	0	0	2.0E2	0.139
3789	1240	Sisma X SLD	4.7	0	0	0	2.0E2	0.139	3790	1240	Sisma Y SLD	0	4.7	0	0	2.0E2	0.139
3791	1241	Sisma X SLV	4.1	0	0	0	1.7E2	0.139	3792	1241	Sisma Y SLV	0	4.1	0	0	1.7E2	0.139
3793	1241	Sisma X SLD	4	0	0	0	1.7E2	0.139	3794	1241	Sisma Y SLD	0	4	0	0	1.7E2	0.139

Indice	Nodo	Condizione	Fx	Fy	Fz	Mz	Peso	Gamma	Indice	Nodo	Condizione	Fx	Fy	Fz	Mz	Peso	Gamma
3795	1242	Sisma X SLV	3.7	0	0	0	155.04	0.139	3796	1242	Sisma Y SLV	0	3.7	0	0	155.04	0.139
3797	1242	Sisma X SLD	3.6	0	0	0	155.04	0.139	3798	1242	Sisma Y SLD	0	3.6	0	0	155.04	0.139
3799	1243	Sisma X SLV	3.7	0	0	0	1.5E2	0.139	3800	1243	Sisma Y SLV	0	3.7	0	0	1.5E2	0.139
3801	1243	Sisma X SLD	3.6	0	0	0	1.5E2	0.139	3802	1243	Sisma Y SLD	0	3.6	0	0	1.5E2	0.139
3803	1244	Sisma X SLV	3.6	0	0	0	1.5E2	0.139	3804	1244	Sisma Y SLV	0	3.6	0	0	1.5E2	0.139
3805	1244	Sisma X SLD	3.5	0	0	0	1.5E2	0.139	3806	1244	Sisma Y SLD	0	3.5	0	0	1.5E2	0.139
3807	1245	Sisma X SLV	2.1	0	0	0	87.16	0.141	3808	1245	Sisma Y SLV	0	2.1	0	0	87.16	0.141
3809	1245	Sisma X SLD	2.1	0	0	0	87.16	0.141	3810	1245	Sisma Y SLD	0	2.1	0	0	87.16	0.141
3811	1246	Sisma X SLV	3.2	0	0	0	1.3E2	0.142	3812	1246	Sisma Y SLV	0	3.2	0	0	1.3E2	0.142
3813	1246	Sisma X SLD	3.1	0	0	0	1.3E2	0.142	3814	1246	Sisma Y SLD	0	3.1	0	0	1.3E2	0.142
3815	1247	Sisma X SLV	2.4	0	0	0	97.915	0.142	3816	1247	Sisma Y SLV	0	2.4	0	0	97.915	0.142
3817	1247	Sisma X SLD	2.3	0	0	0	97.915	0.142	3818	1247	Sisma Y SLD	0	2.3	0	0	97.915	0.142
3819	1248	Sisma X SLV	3.1	0	0	0	1.3E2	0.143	3820	1248	Sisma Y SLV	0	3.1	0	0	1.3E2	0.143
3821	1248	Sisma X SLD	3.1	0	0	0	1.3E2	0.143	3822	1248	Sisma Y SLD	0	3.1	0	0	1.3E2	0.143
3823	1249	Sisma X SLV	3.4	0	0	0	137.27	0.145	3824	1249	Sisma Y SLV	0	3.4	0	0	137.27	0.145
3825	1249	Sisma X SLD	3.4	0	0	0	137.27	0.145	3826	1249	Sisma Y SLD	0	3.4	0	0	137.27	0.145
3827	1250	Sisma X SLV	3.1	0	0	0	1.2E2	0.146	3828	1250	Sisma Y SLV	0	3.1	0	0	1.2E2	0.146
3829	1250	Sisma X SLD	3.1	0	0	0	1.2E2	0.146	3830	1250	Sisma Y SLD	0	3.1	0	0	1.2E2	0.146
3831	1251	Sisma X SLV	3.4	0	0	0	1.4E2	0.147	3832	1251	Sisma Y SLV	0	3.4	0	0	1.4E2	0.147
3833	1251	Sisma X SLD	3.4	0	0	0	1.4E2	0.147	3834	1251	Sisma Y SLD	0	3.4	0	0	1.4E2	0.147
3835	1252	Sisma X SLV	3.3	0	0	0	1.3E2	0.148	3836	1252	Sisma Y SLV	0	3.3	0	0	1.3E2	0.148
3837	1252	Sisma X SLD	3.2	0	0	0	1.3E2	0.148	3838	1252	Sisma Y SLD	0	3.2	0	0	1.3E2	0.148
3839	1253	Sisma X SLV	2.6	0	0	0	85.035	0.176	3840	1253	Sisma Y SLV	0	2.6	0	0	85.035	0.176
3841	1253	Sisma X SLD	2.5	0	0	0	85.035	0.176	3842	1253	Sisma Y SLD	0	2.5	0	0	85.035	0.176
3843	1254	Sisma X SLV	5.2	0	0	0	1.7E2	0.177	3844	1254	Sisma Y SLV	0	5.2	0	0	1.7E2	0.177
3845	1254	Sisma X SLD	5.1	0	0	0	1.7E2	0.177	3846	1254	Sisma Y SLD	0	5.1	0	0	1.7E2	0.177
3847	1255	Sisma X SLV	3.9	0	0	0	1.3E2	0.177	3848	1255	Sisma Y SLV	0	3.9	0	0	1.3E2	0.177
3849	1255	Sisma X SLD	3.8	0	0	0	1.3E2	0.177	3850	1255	Sisma Y SLD	0	3.8	0	0	1.3E2	0.177
3851	1256	Sisma X SLV	3.9	0	0	0	1.3E2	0.177	3852	1256	Sisma Y SLV	0	3.9	0	0	1.3E2	0.177
3853	1256	Sisma X SLD	3.8	0	0	0	1.3E2	0.177	3854	1256	Sisma Y SLD	0	3.8	0	0	1.3E2	0.177
3855	1257	Sisma X SLV	3.9	0	0	0	1.3E2	0.177	3856	1257	Sisma Y SLV	0	3.9	0	0	1.3E2	0.177
3857	1257	Sisma X SLD	3.9	0	0	0	1.3E2	0.177	3858	1257	Sisma Y SLD	0	3.9	0	0	1.3E2	0.177
3859	1258	Sisma X SLV	7	0	0	0	233.51	0.177	3860	1258	Sisma Y SLV	0	7	0	0	233.51	0.177
3861	1258	Sisma X SLD	6.9	0	0	0	233.51	0.177	3862	1258	Sisma Y SLD	0	6.9	0	0	233.51	0.177
3863	1259	Sisma X SLV	6.2	0	0	0	2.1E2	0.177	3864	1259	Sisma Y SLV	0	6.2	0	0	2.1E2	0.177
3865	1259	Sisma X SLD	6.1	0	0	0	2.1E2	0.177	3866	1259	Sisma Y SLD	0	6.1	0	0	2.1E2	0.177
3867	1260	Sisma X SLV	4.1	0	0	0	1.4E2	0.177	3868	1260	Sisma Y SLV	0	4.1	0	0	1.4E2	0.177
3869	1260	Sisma X SLD	4.1	0	0	0	1.4E2	0.177	3870	1260	Sisma Y SLD	0	4.1	0	0	1.4E2	0.177
3871	1261	Sisma X SLV	4.2	0	0	0	1.4E2	0.177	3872	1261	Sisma Y SLV	0	4.2	0	0	1.4E2	0.177
3873	1261	Sisma X SLD	4.1	0	0	0	1.4E2	0.177	3874	1261	Sisma Y SLD	0	4.1	0	0	1.4E2	0.177
3875	1262	Sisma X SLV	6.3	0	0	0	2.1E2	0.177	3876	1262	Sisma Y SLV	0	6.3	0	0	2.1E2	0.177
3877	1262	Sisma X SLD	6.2	0	0	0	2.1E2	0.177	3878	1262	Sisma Y SLD	0	6.2	0	0	2.1E2	0.177
3879	1263	Sisma X SLV	6.1	0	0	0	2.0E2	0.177	3880	1263	Sisma Y SLV	0	6.1	0	0	2.0E2	0.177
3881	1263	Sisma X SLD	6	0	0	0	2.0E2	0.177	3882	1263	Sisma Y SLD	0	6	0	0	2.0E2	0.177
3883	1264	Sisma X SLV	4.1	0	0	0	1.4E2	0.177	3884	1264	Sisma Y SLV	0	4.1	0	0	1.4E2	0.177
3885	1264	Sisma X SLD	4	0	0	0	1.4E2	0.177	3886	1264	Sisma Y SLD	0	4	0	0	1.4E2	0.177
3887	1265	Sisma X SLV	4.1	0	0	0	136.46	0.177	3888	1265	Sisma Y SLV	0	4.1	0	0	136.46	0.177
3889	1265	Sisma X SLD	4	0	0	0	136.46	0.177	3890	1265	Sisma Y SLD	0	4	0	0	136.46	0.177
3891	1266	Sisma X SLV	6.1	0	0	0	2.0E2	0.177	3892	1266	Sisma Y SLV	0	6.1	0	0	2.0E2	0.177
3893	1266	Sisma X SLD	6	0	0	0	2.0E2	0.177	3894	1266	Sisma Y SLD	0	6	0	0	2.0E2	0.177
3895	1267	Sisma X SLV	5.3	0	0	0	1.8E2	0.177	3896	1267	Sisma Y SLV	0	5.3	0	0	1.8E2	0.177
3897	1267	Sisma X SLD	5.2	0	0	0	1.8E2	0.177	3898	1267	Sisma Y SLD	0	5.2	0	0	1.8E2	0.177
3899	1268	Sisma X SLV	4.1	0	0	0	136.11	0.177	3900	1268	Sisma Y SLV	0	4.1	0	0	136.11	0.177
3901	1268	Sisma X SLD	4	0	0	0	136.11	0.177	3902	1268	Sisma Y SLD	0	4	0	0	136.11	0.177
3903	1269	Sisma X SLV	4.2	0	0	0	1.4E2	0.177	3904	1269	Sisma Y SLV	0	4.2	0	0	1.4E2	0.177
3905	1269	Sisma X SLD	4.1	0	0	0	1.4E2	0.177	3906	1269	Sisma Y SLD	0	4.1	0	0	1.4E2	0.177
3907	1270	Sisma X SLV	7	0	0	0	2.3E2	0.177	3908	1270	Sisma Y SLV	0	7	0	0	2.3E2	0.177
3909	1270	Sisma X SLD	6.9	0	0	0	2.3E2	0.177	3910	1270	Sisma Y SLD	0	6.9	0	0	2.3E2	0.177
3911	1271	Sisma X SLV	10.2	0	0	0	3.4E2	0.177	3912	1271	Sisma Y SLV	0	10.2	0	0	3.4E2	0.177
3913	1271	Sisma X SLD	10	0	0	0	3.4E2	0.177	3914	1271	Sisma Y SLD	0	10	0	0	3.4E2	0.177
3915	1272	Sisma X SLV	9.5	0	0	0	3.2E2	0.177	3916	1272	Sisma Y SLV	0	9.5	0	0	3.2E2	0.177
3917	1272	Sisma X SLD	9.4	0	0	0	3.2E2	0.177	3918	1272	Sisma Y SLD	0	9.4	0	0	3.2E2	0.177
3919	1273	Sisma X SLV	6.3	0	0	0	2.1E2	0.177	3920	1273	Sisma Y SLV	0	6.3	0	0	2.1E2	0.177
3921	1273	Sisma X SLD	6.2	0	0	0	2.1E2	0.177	3922	1273	Sisma Y SLD	0	6.2	0	0	2.1E2	0.177
3923	1274	Sisma X SLV	6.6	0	0	0	218.15	0.177	3924	1274	Sisma Y SLV	0	6.6	0	0	218.15	0.177
3925	1274	Sisma X SLD	6.5	0	0	0	218.15	0.177	3926	1274	Sisma Y SLD	0	6.5	0	0	218.15	0.177
3927	1275	Sisma X SLV	3.2	0	0	0	1.1E2	0.177	3928	1275	Sisma Y SLV	0	3.2	0	0	1.1E2	0.177
3929	1275	Sisma X SLD	3.1	0	0	0	1.1E2	0.177	3930	1275	Sisma Y SLD	0	3.1	0	0	1.1E2	0.177
3931	1276	Sisma X SLV	4.1	0	0	0	1.3E2	0.177	3932	1276	Sisma Y SLV	0	4.1	0	0	1.3E2	0.177
3933	1276	Sisma X SLD	4	0	0	0	1.3E2	0.177	3934	1276	Sisma Y SLD	0	4	0	0	1.3E2	0.177
3935	1277	Sisma X SLV	4	0	0	0	1.3E2	0.177	3936	1277	Sisma Y SLV	0	4	0	0	1.3E2	0.177
3937	1277	Sisma X SLD	4	0	0	0	1.3E2	0.177	3938	1277	Sisma Y SLD	0	4	0	0	1.3E2	0.177
3939	1278	Sisma X SLV	6.8	0	0	0	2.3E2	0.177	3940	1278	Sisma Y SLV	0	6.8	0	0	2.3E2	0.177
3941	1278	Sisma X SLD	6.7	0	0	0	2.3E2	0.177	3942	1278	Sisma Y SLD	0	6.7	0	0	2.3E2	0.177
3943	1279	Sisma X SLV	7.1	0	0	0	2.3E2	0.177	3944	1279	Sisma Y SLV	0	7.1	0	0	2.3E2	0.177
3945	1279	Sisma X SLD	7	0	0	0	2.3E2	0.177	3946	1279	Sisma Y SLD	0	7	0	0	2.3E2	0.177
3947	1280	Sisma X SLV	2.9	0	0	0	95.184	0.177	3948	1280	Sisma Y SLV	0	2.9	0	0	95.184	0.177
3949	1280	Sisma X SLD	2.8	0	0	0	95.184	0.177	3950	1280	Sisma Y SLD	0	2.8	0	0	95.184	0.177
3951	1281	Sisma X SLV	2.6	0	0	0	87.535	0.177	3952	1281	Sisma Y SLV	0	2.6	0	0	87.535	0.177
3953	1281	Sisma X SLD	2.6	0	0	0	87.535	0.177	3954	1281	Sisma Y SLD	0	2.6	0	0	87.535	0.177
3955	1282	Sisma X SLV	4.9	0	0	0	1.6E2	0.177	3956	1282	Sisma Y SLV	0	4.9	0	0	1.6E2	0.177
3957	1282	Sisma X SLD	4.9	0	0	0	1.6E2	0.177	3958	1282	Sisma Y SLD	0	4.9	0	0	1.6E2	0.177
3959	1283	Sisma X SLV	3.2	0	0	0	1.1E2	0.177	3960	1283	Sisma Y SLV	0	3.2	0	0	1.1E2	0.177
3961	1283	Sisma X SLD	3.2	0	0	0	1.1E2	0.177	3962	1283	Sisma Y SLD	0	3.2	0	0	1.1E2	0.177
3963	1284	Sisma X SLV	6.3	0	0	0	2.1E2	0.177	3964	1284	Sisma Y SLV	0	6.3	0	0	2.1E2	0.177
3965	1284	Sisma X SLD	6.2	0	0	0	2.1E2	0.177	3966	1284	Sisma Y SLD	0	6.2	0	0	2.1E2	0.177
3967	1285	Sisma X SLV	7.4	0	0	0	244.53	0.177	3968	1285	Sisma Y SLV	0	7.4	0	0	244.53	0.177
3969	1285	Sisma X SLD	7.3	0	0	0	244.53	0.177	3970	1285	Sisma Y SLD	0	7.3	0	0	244.53	0.177
3971	1286	Sisma X SLV	11.9	0	0	0	3.9E2	0.177	3972	1286	Sisma Y SLV	0	11.9	0	0	3.9E2	0.177
3973	1286	Sisma X SLD	11.7	0	0	0	3.9E2	0.177	3974	1286	Sisma Y SLD	0	11.7	0	0	3.9E2	0.177
3975	1287	Sisma X SLV	6.3	0	0	0	210.18	0.177	3976	1287	Sisma Y SLV	0	6.3	0	0	210.18	0.177
3977	1287	Sisma X SLD	6.2	0	0	0	210.18	0.177	3978	1287	Sisma Y SLD	0	6.2	0	0	210.18	0.177
3979	1288	Sisma X SLV	6.7	0	0	0	2.2E2	0.177	3980	1288	Sisma Y SLV	0	6.7	0	0	2.2E2	0.177
3981	1288	Sisma X SLD	6.6	0	0	0	2.2E2	0.177	3982	1288	Sisma Y SLD	0	6.6	0	0	2.2E2	0.177
3983	1289	Sisma X SLV	4.2	0	0	0	1.4E2	0.177	3984	1289	Sisma Y SLV	0	4.2	0	0	1.4E2	0.177
3985	1289	Sisma X SLD	4.1	0	0	0	1.4E2	0.177	3986	1289	Sisma Y SLD	0	4.1	0	0	1.4E2	0.177
3987	1290	Sisma X SLV	4.2	0	0	0	1.4E2	0.177	3988	1290	Sisma Y SLV	0	4.2	0	0	1.4E2	0.177
3989	1290	Sisma X SLD	4.2	0	0	0	1.4E2	0.177	3990	1290	Sisma Y SLD	0	4.2	0	0	1.4E2	0.177
3991	1291	Sisma X SLV	4.2	0	0	0	1.4E2	0.177	3992	1291	Sisma Y SLV	0	4.2	0	0	1.4E2	0.177
3993	1291	Sisma X SLD	4.1	0	0	0	1.4E2	0.177	3994	1291	Sisma Y SLD	0	4.1	0	0	1.4E2	0.177
3995	1292	Sisma X SLV	4.2	0	0	0	1.4E2	0.177	3996	1292	Sisma Y SLV	0	4.2	0	0	1.4E2	0.177
3997	1292	Sisma X SLD	4.1	0	0	0	1.4E2	0.177	3998	1292	Sisma Y SLD	0	4.1	0	0	1.4E2	0.177
3999	1293	Sisma X SLV	6.7	0	0	0	2.2E2	0.177	4000	1293	Sisma Y SLV	0	6.7	0	0	2.2E2	0.177
4001	1293	Sisma X SLD	6.6	0	0	0	2.2E2	0.177	4002	1293	Sisma Y SLD	0	6.6	0	0	2.2E2	0.177

Indice	Nodo	Condizione	Fx	Fy	Fz	Mz	Peso	Gamma	Indice	Nodo	Condizione	Fx	Fy	Fz	Mz	Peso	Gamma
4003	1294	Sisma X SLV	6.1	0	0	0	2.0E2	0.177	4004	1294	Sisma Y SLV	0	6.1	0	0	2.0E2	0.177
4005	1294	Sisma X SLD	6	0	0	0	2.0E2	0.177	4006	1294	Sisma Y SLD	0	6	0	0	2.0E2	0.177
4007	1295	Sisma X SLV	6.1	0	0	0	2.0E2	0.177	4008	1295	Sisma Y SLV	0	6.1	0	0	2.0E2	0.177
4009	1295	Sisma X SLD	6	0	0	0	2.0E2	0.177	4010	1295	Sisma Y SLD	0	6	0	0	2.0E2	0.177
4011	1296	Sisma X SLV	4.1	0	0	0	1.4E2	0.177	4012	1296	Sisma Y SLV	0	4.1	0	0	1.4E2	0.177
4013	1296	Sisma X SLD	4	0	0	0	1.4E2	0.177	4014	1296	Sisma Y SLD	0	4	0	0	1.4E2	0.177
4015	1297	Sisma X SLV	4.1	0	0	0	1.4E2	0.177	4016	1297	Sisma Y SLV	0	4.1	0	0	1.4E2	0.177
4017	1297	Sisma X SLD	4	0	0	0	1.4E2	0.177	4018	1297	Sisma Y SLD	0	4	0	0	1.4E2	0.177
4019	1298	Sisma X SLV	5.9	0	0	0	194.64	0.177	4020	1298	Sisma Y SLV	0	5.9	0	0	194.64	0.177
4021	1298	Sisma X SLD	5.8	0	0	0	194.64	0.177	4022	1298	Sisma Y SLD	0	5.8	0	0	194.64	0.177
4023	1299	Sisma X SLV	9.2	0	0	0	3.0E2	0.177	4024	1299	Sisma Y SLV	0	9.2	0	0	3.0E2	0.177
4025	1299	Sisma X SLD	9	0	0	0	3.0E2	0.177	4026	1299	Sisma Y SLD	0	9	0	0	3.0E2	0.177
4027	1300	Sisma X SLV	9	0	0	0	3.0E2	0.177	4028	1300	Sisma Y SLV	0	9	0	0	3.0E2	0.177
4029	1300	Sisma X SLD	8.8	0	0	0	3.0E2	0.177	4030	1300	Sisma Y SLD	0	8.8	0	0	3.0E2	0.177
4031	1301	Sisma X SLV	8.3	0	0	0	2.8E2	0.177	4032	1301	Sisma Y SLV	0	8.3	0	0	2.8E2	0.177
4033	1301	Sisma X SLD	8.2	0	0	0	2.8E2	0.177	4034	1301	Sisma Y SLD	0	8.2	0	0	2.8E2	0.177
4035	1302	Sisma X SLV	8.3	0	0	0	2.7E2	0.177	4036	1302	Sisma Y SLV	0	8.3	0	0	2.7E2	0.177
4037	1302	Sisma X SLD	8.2	0	0	0	2.7E2	0.177	4038	1302	Sisma Y SLD	0	8.2	0	0	2.7E2	0.177
4039	1303	Sisma X SLV	8.8	0	0	0	2.9E2	0.177	4040	1303	Sisma Y SLV	0	8.8	0	0	2.9E2	0.177
4041	1303	Sisma X SLD	8.6	0	0	0	2.9E2	0.177	4042	1303	Sisma Y SLD	0	8.6	0	0	2.9E2	0.177
4043	1304	Sisma X SLV	9.5	0	0	0	3.1E2	0.178	4044	1304	Sisma Y SLV	0	9.5	0	0	3.1E2	0.178
4045	1304	Sisma X SLD	9.3	0	0	0	3.1E2	0.178	4046	1304	Sisma Y SLD	0	9.3	0	0	3.1E2	0.178
4047	1305	Sisma X SLV	8.4	0	0	0	278.33	0.178	4048	1305	Sisma Y SLV	0	8.4	0	0	278.33	0.178
4049	1305	Sisma X SLD	8.3	0	0	0	278.33	0.178	4050	1305	Sisma Y SLD	0	8.3	0	0	278.33	0.178
4051	1306	Sisma X SLV	9.4	0	0	0	3.1E2	0.178	4052	1306	Sisma Y SLV	0	9.4	0	0	3.1E2	0.178
4053	1306	Sisma X SLD	9.2	0	0	0	3.1E2	0.178	4054	1306	Sisma Y SLD	0	9.2	0	0	3.1E2	0.178
4055	1307	Sisma X SLV	8.3	0	0	0	2.7E2	0.178	4056	1307	Sisma Y SLV	0	8.3	0	0	2.7E2	0.178
4057	1307	Sisma X SLD	8.2	0	0	0	2.7E2	0.178	4058	1307	Sisma Y SLD	0	8.2	0	0	2.7E2	0.178
4059	1308	Sisma X SLV	8.9	0	0	0	2.9E2	0.178	4060	1308	Sisma Y SLV	0	8.9	0	0	2.9E2	0.178
4061	1308	Sisma X SLD	8.7	0	0	0	2.9E2	0.178	4062	1308	Sisma Y SLD	0	8.7	0	0	2.9E2	0.178
4063	1309	Sisma X SLV	8.7	0	0	0	2.8E2	0.178	4064	1309	Sisma Y SLV	0	8.7	0	0	2.8E2	0.178
4065	1309	Sisma X SLD	8.5	0	0	0	2.8E2	0.178	4066	1309	Sisma Y SLD	0	8.5	0	0	2.8E2	0.178
4067	1310	Sisma X SLV	9	0	0	0	3.0E2	0.178	4068	1310	Sisma Y SLV	0	9	0	0	3.0E2	0.178
4069	1310	Sisma X SLD	8.9	0	0	0	3.0E2	0.178	4070	1310	Sisma Y SLD	0	8.9	0	0	3.0E2	0.178
4071	1311	Sisma X SLV	9	0	0	0	3.0E2	0.178	4072	1311	Sisma Y SLV	0	9	0	0	3.0E2	0.178
4073	1311	Sisma X SLD	8.8	0	0	0	3.0E2	0.178	4074	1311	Sisma Y SLD	0	8.8	0	0	3.0E2	0.178
4075	1312	Sisma X SLV	9.2	0	0	0	3.0E2	0.178	4076	1312	Sisma Y SLV	0	9.2	0	0	3.0E2	0.178
4077	1312	Sisma X SLD	9	0	0	0	3.0E2	0.178	4078	1312	Sisma Y SLD	0	9	0	0	3.0E2	0.178
4079	1313	Sisma X SLV	8.4	0	0	0	2.8E2	0.178	4080	1313	Sisma Y SLV	0	8.4	0	0	2.8E2	0.178
4081	1313	Sisma X SLD	8.2	0	0	0	2.8E2	0.178	4082	1313	Sisma Y SLD	0	8.2	0	0	2.8E2	0.178
4083	1314	Sisma X SLV	8.4	0	0	0	2.8E2	0.179	4084	1314	Sisma Y SLV	0	8.4	0	0	2.8E2	0.179
4085	1314	Sisma X SLD	8.3	0	0	0	2.8E2	0.179	4086	1314	Sisma Y SLD	0	8.3	0	0	2.8E2	0.179
4087	1315	Sisma X SLV	8.5	0	0	0	276.25	0.18	4088	1315	Sisma Y SLV	0	8.5	0	0	276.25	0.18
4089	1315	Sisma X SLD	8.3	0	0	0	276.25	0.18	4090	1315	Sisma Y SLD	0	8.3	0	0	276.25	0.18
4091	1316	Sisma X SLV	9.8	0	0	0	3.2E2	0.18	4092	1316	Sisma Y SLV	0	9.8	0	0	3.2E2	0.18
4093	1316	Sisma X SLD	9.6	0	0	0	3.2E2	0.18	4094	1316	Sisma Y SLD	0	9.6	0	0	3.2E2	0.18
4095	1317	Sisma X SLV	6.9	0	0	0	2.2E2	0.18	4096	1317	Sisma Y SLV	0	6.9	0	0	2.2E2	0.18
4097	1317	Sisma X SLD	6.8	0	0	0	2.2E2	0.18	4098	1317	Sisma Y SLD	0	6.8	0	0	2.2E2	0.18
4099	1318	Sisma X SLV	8.3	0	0	0	270.5	0.18	4100	1318	Sisma Y SLV	0	8.3	0	0	270.5	0.18
4101	1318	Sisma X SLD	8.2	0	0	0	270.5	0.18	4102	1318	Sisma Y SLD	0	8.2	0	0	270.5	0.18
4103	1319	Sisma X SLV	8.7	0	0	0	2.8E2	0.18	4104	1319	Sisma Y SLV	0	8.7	0	0	2.8E2	0.18
4105	1319	Sisma X SLD	8.6	0	0	0	2.8E2	0.18	4106	1319	Sisma Y SLD	0	8.6	0	0	2.8E2	0.18
4107	1320	Sisma X SLV	7.9	0	0	0	2.6E2	0.18	4108	1320	Sisma Y SLV	0	7.9	0	0	2.6E2	0.18
4109	1320	Sisma X SLD	7.7	0	0	0	2.6E2	0.18	4110	1320	Sisma Y SLD	0	7.7	0	0	2.6E2	0.18
4111	1321	Sisma X SLV	6.9	0	0	0	2.2E2	0.18	4112	1321	Sisma Y SLV	0	6.9	0	0	2.2E2	0.18
4113	1321	Sisma X SLD	6.8	0	0	0	2.2E2	0.18	4114	1321	Sisma Y SLD	0	6.8	0	0	2.2E2	0.18
4115	1322	Sisma X SLV	8.5	0	0	0	276.81	0.18	4116	1322	Sisma Y SLV	0	8.5	0	0	276.81	0.18
4117	1322	Sisma X SLD	8.4	0	0	0	276.81	0.18	4118	1322	Sisma Y SLD	0	8.4	0	0	276.81	0.18
4119	1323	Sisma X SLV	8.4	0	0	0	2.7E2	0.18	4120	1323	Sisma Y SLV	0	8.4	0	0	2.7E2	0.18
4121	1323	Sisma X SLD	8.3	0	0	0	2.7E2	0.18	4122	1323	Sisma Y SLD	0	8.3	0	0	2.7E2	0.18
4123	1324	Sisma X SLV	8.7	0	0	0	2.8E2	0.18	4124	1324	Sisma Y SLV	0	8.7	0	0	2.8E2	0.18
4125	1324	Sisma X SLD	8.6	0	0	0	2.8E2	0.18	4126	1324	Sisma Y SLD	0	8.6	0	0	2.8E2	0.18
4127	1325	Sisma X SLV	8.5	0	0	0	2.8E2	0.18	4128	1325	Sisma Y SLV	0	8.5	0	0	2.8E2	0.18
4129	1325	Sisma X SLD	8.4	0	0	0	2.8E2	0.18	4130	1325	Sisma Y SLD	0	8.4	0	0	2.8E2	0.18
4131	1326	Sisma X SLV	8.4	0	0	0	2.7E2	0.18	4132	1326	Sisma Y SLV	0	8.4	0	0	2.7E2	0.18
4133	1326	Sisma X SLD	8.3	0	0	0	2.7E2	0.18	4134	1326	Sisma Y SLD	0	8.3	0	0	2.7E2	0.18
4135	1327	Sisma X SLV	9.5	0	0	0	3.1E2	0.18	4136	1327	Sisma Y SLV	0	9.5	0	0	3.1E2	0.18
4137	1327	Sisma X SLD	9.3	0	0	0	3.1E2	0.18	4138	1327	Sisma Y SLD	0	9.3	0	0	3.1E2	0.18
4139	1328	Sisma X SLV	8.4	0	0	0	2.7E2	0.18	4140	1328	Sisma Y SLV	0	8.4	0	0	2.7E2	0.18
4141	1328	Sisma X SLD	8.3	0	0	0	2.7E2	0.18	4142	1328	Sisma Y SLD	0	8.3	0	0	2.7E2	0.18
4143	1329	Sisma X SLV	8.6	0	0	0	2.8E2	0.181	4144	1329	Sisma Y SLV	0	8.6	0	0	2.8E2	0.181
4145	1329	Sisma X SLD	8.4	0	0	0	2.8E2	0.181	4146	1329	Sisma Y SLD	0	8.4	0	0	2.8E2	0.181
4147	1330	Sisma X SLV	8.6	0	0	0	2.8E2	0.181	4148	1330	Sisma Y SLV	0	8.6	0	0	2.8E2	0.181
4149	1330	Sisma X SLD	8.5	0	0	0	2.8E2	0.181	4150	1330	Sisma Y SLD	0	8.5	0	0	2.8E2	0.181
4151	1331	Sisma X SLV	9.3	0	0	0	3.0E2	0.181	4152	1331	Sisma Y SLV	0	9.3	0	0	3.0E2	0.181
4153	1331	Sisma X SLD	9.2	0	0	0	3.0E2	0.181	4154	1331	Sisma Y SLD	0	9.2	0	0	3.0E2	0.181
4155	1332	Sisma X SLV	7.6	0	0	0	2.5E2	0.182	4156	1332	Sisma Y SLV	0	7.6	0	0	2.5E2	0.182
4157	1332	Sisma X SLD	7.5	0	0	0	2.5E2	0.182	4158	1332	Sisma Y SLD	0	7.5	0	0	2.5E2	0.182
4159	1333	Sisma X SLV	8.6	0	0	0	2.8E2	0.182	4160	1333	Sisma Y SLV	0	8.6	0	0	2.8E2	0.182
4161	1333	Sisma X SLD	8.4	0	0	0	2.8E2	0.182	4162	1333	Sisma Y SLD	0	8.4	0	0	2.8E2	0.182
4163	1334	Sisma X SLV	9	0	0	0	2.9E2	0.182	4164	1334	Sisma Y SLV	0	9	0	0	2.9E2	0.182
4165	1334	Sisma X SLD	8.8	0	0	0	2.9E2	0.182	4166	1334	Sisma Y SLD	0	8.8	0	0	2.9E2	0.182
4167	1335	Sisma X SLV	8.2	0	0	0	2.7E2	0.182	4168	1335	Sisma Y SLV	0	8.2	0	0	2.7E2	0.182
4169	1335	Sisma X SLD	8.1	0	0	0	2.7E2	0.182	4170	1335	Sisma Y SLD	0	8.1	0	0	2.7E2	0.182
4171	1336	Sisma X SLV	8.6	0	0	0	2.8E2	0.182	4172	1336	Sisma Y SLV	0	8.6	0	0	2.8E2	0.182
4173	1336	Sisma X SLD	8.5	0	0	0	2.8E2	0.182	4174	1336	Sisma Y SLD	0	8.5	0	0	2.8E2	0.182
4175	1337	Sisma X SLV	7.6	0	0	0	2.4E2	0.182	4176	1337	Sisma Y SLV	0	7.6	0	0	2.4E2	0.182
4177	1337	Sisma X SLD	7.5	0	0	0	2.4E2	0.182	4178	1337	Sisma Y SLD	0	7.5	0	0	2.4E2	0.182
4179	1338	Sisma X SLV	8.7	0	0	0	2.8E2	0.182	4180	1338	Sisma Y SLV	0	8.7	0	0	2.8E2	0.182
4181	1338	Sisma X SLD	8.5	0	0	0	2.8E2	0.182	4182	1338	Sisma Y SLD	0	8.5	0	0	2.8E2	0.182
4183	1339	Sisma X SLV	9.1	0	0	0	2.9E2	0.183	4184	1339	Sisma Y SLV	0	9.1	0	0	2.9E2	0.183
4185	1339	Sisma X SLD	8.9	0	0	0	2.9E2	0.183	4186	1339	Sisma Y SLD	0	8.9	0	0	2.9E2	0.183
4187	1340	Sisma X SLV	8.7	0	0	0	2.8E2	0.183	4188	1340	Sisma Y SLV	0	8.7	0	0	2.8E2	0.183
4189	1340	Sisma X SLD	8.6	0	0	0	2.8E2	0.183	4190	1340	Sisma Y SLD	0	8.6	0	0	2.8E2	0.183
4191	1341	Sisma X SLV	9.1	0	0	0	2.9E2	0.183	4192	1341	Sisma Y SLV	0	9.1	0	0	2.9E2	0.183
4193	1341	Sisma X SLD	9	0	0	0	2.9E2	0.183	4194	1341	Sisma Y SLD	0	9	0	0	2.9E2	0.183
4195	1342	Sisma X SLV	8.5	0	0	0	2.7E2	0.183	4196	1342	Sisma Y SLV	0	8.5	0	0	2.7E2	0.183
4197	1342	Sisma X SLD	8.3	0	0	0	2.7E2	0.183	4198	1342	Sisma Y SLD	0	8.3	0	0	2.7E2	0.183
4199	1343	Sisma X SLV	8.7	0	0	0	2.8E2	0.183	4200	1343	Sisma Y SLV	0	8.7	0	0	2.8E2	0.183
4201	1343	Sisma X SLD	8.6	0	0	0	2.8E2	0.183	4202	1343	Sisma Y SLD	0	8.6	0	0	2.8E2	0.183
4203	1344	Sisma X SLV	8.8	0	0	0	2.8E2	0.183	4204	1344	Sisma Y SLV	0	8.8	0	0	2.8E2	0.183

Indice	Nodo	Condizione	Fx	Fy	Fz	Mz	Peso	Gamma	Indice	Nodo	Condizione	Fx	Fy	Fz	Mz	Peso	Gamma
4205	1344	Sisma X SLD	8.7	0	0	0	2.8E2	0.183	4206	1344	Sisma Y SLD	0	8.7	0	0	2.8E2	0.183
4207	1345	Sisma X SLV	8.8	0	0	0	2.8E2	0.183	4208	1345	Sisma Y SLV	0	8.8	0	0	2.8E2	0.183
4209	1345	Sisma X SLD	8.6	0	0	0	2.8E2	0.183	4210	1345	Sisma Y SLD	0	8.6	0	0	2.8E2	0.183
4211	1346	Sisma X SLV	9.2	0	0	0	2.9E2	0.183	4212	1346	Sisma Y SLV	0	9.2	0	0	2.9E2	0.183
4213	1346	Sisma X SLD	9.1	0	0	0	2.9E2	0.183	4214	1346	Sisma Y SLD	0	9.1	0	0	2.9E2	0.183
4215	1347	Sisma X SLV	8.6	0	0	0	2.7E2	0.183	4216	1347	Sisma Y SLV	0	8.6	0	0	2.7E2	0.183
4217	1347	Sisma X SLD	8.4	0	0	0	2.7E2	0.183	4218	1347	Sisma Y SLD	0	8.4	0	0	2.7E2	0.183
4219	1348	Sisma X SLV	8.7	0	0	0	277.58	0.183	4220	1348	Sisma Y SLV	0	8.7	0	0	277.58	0.183
4221	1348	Sisma X SLD	8.6	0	0	0	277.58	0.183	4222	1348	Sisma Y SLD	0	8.6	0	0	277.58	0.183
4223	1349	Sisma X SLV	8.8	0	0	0	2.8E2	0.183	4224	1349	Sisma Y SLV	0	8.8	0	0	2.8E2	0.183
4225	1349	Sisma X SLD	8.7	0	0	0	2.8E2	0.183	4226	1349	Sisma Y SLD	0	8.7	0	0	2.8E2	0.183
4227	1350	Sisma X SLV	8.6	0	0	0	2.8E2	0.183	4228	1350	Sisma Y SLV	0	8.6	0	0	2.8E2	0.183
4229	1350	Sisma X SLD	8.5	0	0	0	2.8E2	0.183	4230	1350	Sisma Y SLD	0	8.5	0	0	2.8E2	0.183
4231	1351	Sisma X SLV	9.3	0	0	0	3.0E2	0.183	4232	1351	Sisma Y SLV	0	9.3	0	0	3.0E2	0.183
4233	1351	Sisma X SLD	9.1	0	0	0	3.0E2	0.183	4234	1351	Sisma Y SLD	0	9.1	0	0	3.0E2	0.183
4235	1352	Sisma X SLV	8.7	0	0	0	2.8E2	0.183	4236	1352	Sisma Y SLV	0	8.7	0	0	2.8E2	0.183
4237	1352	Sisma X SLD	8.5	0	0	0	2.8E2	0.183	4238	1352	Sisma Y SLD	0	8.5	0	0	2.8E2	0.183
4239	1353	Sisma X SLV	8.8	0	0	0	2.8E2	0.183	4240	1353	Sisma Y SLV	0	8.8	0	0	2.8E2	0.183
4241	1353	Sisma X SLD	8.7	0	0	0	2.8E2	0.183	4242	1353	Sisma Y SLD	0	8.7	0	0	2.8E2	0.183
4243	1354	Sisma X SLV	8.6	0	0	0	2.8E2	0.183	4244	1354	Sisma Y SLV	0	8.6	0	0	2.8E2	0.183
4245	1354	Sisma X SLD	8.5	0	0	0	2.8E2	0.183	4246	1354	Sisma Y SLD	0	8.5	0	0	2.8E2	0.183
4247	1355	Sisma X SLV	8.8	0	0	0	2.8E2	0.183	4248	1355	Sisma Y SLV	0	8.8	0	0	2.8E2	0.183
4249	1355	Sisma X SLD	8.7	0	0	0	2.8E2	0.183	4250	1355	Sisma Y SLD	0	8.7	0	0	2.8E2	0.183
4251	1356	Sisma X SLV	8.6	0	0	0	2.8E2	0.183	4252	1356	Sisma Y SLV	0	8.6	0	0	2.8E2	0.183
4253	1356	Sisma X SLD	8.5	0	0	0	2.8E2	0.183	4254	1356	Sisma Y SLD	0	8.5	0	0	2.8E2	0.183
4255	1357	Sisma X SLV	8.3	0	0	0	2.7E2	0.183	4256	1357	Sisma Y SLV	0	8.3	0	0	2.7E2	0.183
4257	1357	Sisma X SLD	8.2	0	0	0	2.7E2	0.183	4258	1357	Sisma Y SLD	0	8.2	0	0	2.7E2	0.183
4259	1358	Sisma X SLV	15.1	0	0	0	4.8E2	0.183	4260	1358	Sisma Y SLV	0	15.1	0	0	4.8E2	0.183
4261	1358	Sisma X SLD	14.8	0	0	0	4.8E2	0.183	4262	1358	Sisma Y SLD	0	14.8	0	0	4.8E2	0.183
4263	1359	Sisma X SLV	13.8	0	0	0	4.4E2	0.183	4264	1359	Sisma Y SLV	0	13.8	0	0	4.4E2	0.183
4265	1359	Sisma X SLD	13.6	0	0	0	4.4E2	0.183	4266	1359	Sisma Y SLD	0	13.6	0	0	4.4E2	0.183
4267	1360	Sisma X SLV	8.8	0	0	0	2.8E2	0.183	4268	1360	Sisma Y SLV	0	8.8	0	0	2.8E2	0.183
4269	1360	Sisma X SLD	8.7	0	0	0	2.8E2	0.183	4270	1360	Sisma Y SLD	0	8.7	0	0	2.8E2	0.183
4271	1361	Sisma X SLV	8.3	0	0	0	2.7E2	0.183	4272	1361	Sisma Y SLV	0	8.3	0	0	2.7E2	0.183
4273	1361	Sisma X SLD	8.2	0	0	0	2.7E2	0.183	4274	1361	Sisma Y SLD	0	8.2	0	0	2.7E2	0.183
4275	1362	Sisma X SLV	9.9	0	0	0	3.2E2	0.183	4276	1362	Sisma Y SLV	0	9.9	0	0	3.2E2	0.183
4277	1362	Sisma X SLD	9.7	0	0	0	3.2E2	0.183	4278	1362	Sisma Y SLD	0	9.7	0	0	3.2E2	0.183
4279	1363	Sisma X SLV	9.9	0	0	0	3.2E2	0.183	4280	1363	Sisma Y SLV	0	9.9	0	0	3.2E2	0.183
4281	1363	Sisma X SLD	9.7	0	0	0	3.2E2	0.183	4282	1363	Sisma Y SLD	0	9.7	0	0	3.2E2	0.183
4283	1364	Sisma X SLV	10	0	0	0	3.2E2	0.183	4284	1364	Sisma Y SLV	0	10	0	0	3.2E2	0.183
4285	1364	Sisma X SLD	9.8	0	0	0	3.2E2	0.183	4286	1364	Sisma Y SLD	0	9.8	0	0	3.2E2	0.183
4287	1365	Sisma X SLV	10	0	0	0	3.2E2	0.183	4288	1365	Sisma Y SLV	0	10	0	0	3.2E2	0.183
4289	1365	Sisma X SLD	9.8	0	0	0	3.2E2	0.183	4290	1365	Sisma Y SLD	0	9.8	0	0	3.2E2	0.183
4291	1366	Sisma X SLV	10.1	0	0	0	3.2E2	0.183	4292	1366	Sisma Y SLV	0	10.1	0	0	3.2E2	0.183
4293	1366	Sisma X SLD	10	0	0	0	3.2E2	0.183	4294	1366	Sisma Y SLD	0	10	0	0	3.2E2	0.183
4295	1367	Sisma X SLV	10.1	0	0	0	3.2E2	0.183	4296	1367	Sisma Y SLV	0	10.1	0	0	3.2E2	0.183
4297	1367	Sisma X SLD	10	0	0	0	3.2E2	0.183	4298	1367	Sisma Y SLD	0	10	0	0	3.2E2	0.183
4299	1368	Sisma X SLV	10.2	0	0	0	3.3E2	0.183	4300	1368	Sisma Y SLV	0	10.2	0	0	3.3E2	0.183
4301	1368	Sisma X SLD	10.1	0	0	0	3.3E2	0.183	4302	1368	Sisma Y SLD	0	10.1	0	0	3.3E2	0.183
4303	1369	Sisma X SLV	10.2	0	0	0	3.3E2	0.183	4304	1369	Sisma Y SLV	0	10.2	0	0	3.3E2	0.183
4305	1369	Sisma X SLD	10.1	0	0	0	3.3E2	0.183	4306	1369	Sisma Y SLD	0	10.1	0	0	3.3E2	0.183
4307	1370	Sisma X SLV	10.4	0	0	0	3.3E2	0.183	4308	1370	Sisma Y SLV	0	10.4	0	0	3.3E2	0.183
4309	1370	Sisma X SLD	10.2	0	0	0	3.3E2	0.183	4310	1370	Sisma Y SLD	0	10.2	0	0	3.3E2	0.183
4311	1371	Sisma X SLV	10.4	0	0	0	3.3E2	0.183	4312	1371	Sisma Y SLV	0	10.4	0	0	3.3E2	0.183
4313	1371	Sisma X SLD	10.2	0	0	0	3.3E2	0.183	4314	1371	Sisma Y SLD	0	10.2	0	0	3.3E2	0.183
4315	1372	Sisma X SLV	10.4	0	0	0	3.3E2	0.183	4316	1372	Sisma Y SLV	0	10.4	0	0	3.3E2	0.183
4317	1372	Sisma X SLD	10.3	0	0	0	3.3E2	0.183	4318	1372	Sisma Y SLD	0	10.3	0	0	3.3E2	0.183
4319	1373	Sisma X SLV	10.4	0	0	0	3.3E2	0.183	4320	1373	Sisma Y SLV	0	10.4	0	0	3.3E2	0.183
4321	1373	Sisma X SLD	10.3	0	0	0	3.3E2	0.183	4322	1373	Sisma Y SLD	0	10.3	0	0	3.3E2	0.183
4323	1374	Sisma X SLV	10.5	0	0	0	335.02	0.183	4324	1374	Sisma Y SLV	0	10.5	0	0	335.02	0.183
4325	1374	Sisma X SLD	10.3	0	0	0	335.02	0.183	4326	1374	Sisma Y SLD	0	10.3	0	0	335.02	0.183
4327	1375	Sisma X SLV	10.5	0	0	0	335.02	0.183	4328	1375	Sisma Y SLV	0	10.5	0	0	335.02	0.183
4329	1375	Sisma X SLD	10.3	0	0	0	335.02	0.183	4330	1375	Sisma Y SLD	0	10.3	0	0	335.02	0.183
4331	1376	Sisma X SLV	10.5	0	0	0	3.4E2	0.183	4332	1376	Sisma Y SLV	0	10.5	0	0	3.4E2	0.183
4333	1376	Sisma X SLD	10.3	0	0	0	3.4E2	0.183	4334	1376	Sisma Y SLD	0	10.3	0	0	3.4E2	0.183
4335	1377	Sisma X SLV	10.5	0	0	0	3.4E2	0.183	4336	1377	Sisma Y SLV	0	10.5	0	0	3.4E2	0.183
4337	1377	Sisma X SLD	10.3	0	0	0	3.4E2	0.183	4338	1377	Sisma Y SLD	0	10.3	0	0	3.4E2	0.183
4339	1378	Sisma X SLV	10.5	0	0	0	3.4E2	0.183	4340	1378	Sisma Y SLV	0	10.5	0	0	3.4E2	0.183
4341	1378	Sisma X SLD	10.4	0	0	0	3.4E2	0.183	4342	1378	Sisma Y SLD	0	10.4	0	0	3.4E2	0.183
4343	1379	Sisma X SLV	10.5	0	0	0	3.4E2	0.183	4344	1379	Sisma Y SLV	0	10.5	0	0	3.4E2	0.183
4345	1379	Sisma X SLD	10.4	0	0	0	3.4E2	0.183	4346	1379	Sisma Y SLD	0	10.4	0	0	3.4E2	0.183
4347	1380	Sisma X SLV	10.5	0	0	0	3.4E2	0.183	4348	1380	Sisma Y SLV	0	10.5	0	0	3.4E2	0.183
4349	1380	Sisma X SLD	10.4	0	0	0	3.4E2	0.183	4350	1380	Sisma Y SLD	0	10.4	0	0	3.4E2	0.183
4351	1381	Sisma X SLV	10.5	0	0	0	3.4E2	0.183	4352	1381	Sisma Y SLV	0	10.5	0	0	3.4E2	0.183
4353	1381	Sisma X SLD	10.4	0	0	0	3.4E2	0.183	4354	1381	Sisma Y SLD	0	10.4	0	0	3.4E2	0.183
4355	1382	Sisma X SLV	10.5	0	0	0	3.4E2	0.183	4356	1382	Sisma Y SLV	0	10.5	0	0	3.4E2	0.183
4357	1382	Sisma X SLD	10.4	0	0	0	3.4E2	0.183	4358	1382	Sisma Y SLD	0	10.4	0	0	3.4E2	0.183
4359	1383	Sisma X SLV	10.5	0	0	0	3.4E2	0.183	4360	1383	Sisma Y SLV	0	10.5	0	0	3.4E2	0.183
4361	1383	Sisma X SLD	10.4	0	0	0	3.4E2	0.183	4362	1383	Sisma Y SLD	0	10.4	0	0	3.4E2	0.183
4363	1384	Sisma X SLV	16.1	0	0	0	5.1E2	0.183	4364	1384	Sisma Y SLV	0	16.1	0	0	5.1E2	0.183
4365	1384	Sisma X SLD	15.8	0	0	0	5.1E2	0.183	4366	1384	Sisma Y SLD	0	15.8	0	0	5.1E2	0.183
4367	1385	Sisma X SLV	15.1	0	0	0	481.41	0.183	4368	1385	Sisma Y SLV	0	15.1	0	0	481.41	0.183
4369	1385	Sisma X SLD	14.8	0	0	0	481.41	0.183	4370	1385	Sisma Y SLD	0	14.8	0	0	481.41	0.183
4371	1386	Sisma X SLV	10.2	0	0	0	3.2E2	0.183	4372	1386	Sisma Y SLV	0	10.2	0	0	3.2E2	0.183
4373	1386	Sisma X SLD	10	0	0	0	3.2E2	0.183	4374	1386	Sisma Y SLD	0	10	0	0	3.2E2	0.183
4375	1387	Sisma X SLV	10.2	0	0	0	3.2E2	0.183	4376	1387	Sisma Y SLV	0	10.2	0	0	3.2E2	0.183
4377	1387	Sisma X SLD	10	0	0	0	3.2E2	0.183	4378	1387	Sisma Y SLD	0	10	0	0	3.2E2	0.183
4379	1388	Sisma X SLV	10.2	0	0	0	3.2E2	0.183	4380	1388	Sisma Y SLV	0	10.2	0	0	3.2E2	0.183
4381	1388	Sisma X SLD	10	0	0	0	3.2E2	0.183	4382	1388	Sisma Y SLD	0	10	0	0	3.2E2	0.183
4383	1389	Sisma X SLV	10.2	0	0	0	3.2E2	0.183	4384	1389	Sisma Y SLV	0	10.2	0	0	3.2E2	0.183
4385	1389	Sisma X SLD	10	0	0	0	3.2E2	0.183	4386	1389	Sisma Y SLD	0	10	0	0	3.2E2	0.183
4387	1390	Sisma X SLV	10.2	0	0	0	3.2E2	0.183	4388	1390	Sisma Y SLV	0	10.2	0	0	3.2E2	0.183
4389	1390	Sisma X SLD	10	0	0	0	3.2E2	0.183	4390	1390	Sisma Y SLD	0	10	0	0	3.2E2	0.183
4391	1391	Sisma X SLV	10.1	0	0	0	3.2E2	0.183	4392	1391	Sisma Y SLV	0	10.1	0	0	3.2E2	0.183
4393	1391	Sisma X SLD	10	0	0	0	3.2E2	0.183	4394	1391	Sisma Y SLD	0	10	0	0	3.2E2	0.183
4395	1392	Sisma X SLV	10.1	0	0	0	3.2E2	0.183	4396	1392	Sisma Y SLV	0	10.1	0	0	3.2E2	0.183
4397	1392	Sisma X SLD	10	0	0	0	3.2E2	0.183	4398	1392	Sisma Y SLD	0	10	0	0	3.2E2	0.183
4399	1393	Sisma X SLV	10.1	0	0	0	3.2E2	0.183	4400	1393	Sisma Y SLV	0	10.1	0	0	3.2E2	0.183
4401	1393	Sisma X SLD	10	0	0	0	3.2E2	0.183	4402	1393	Sisma Y SLD	0	10	0	0	3.2E2	0.183
4403	1394	Sisma X SLV	10.1	0	0	0	3.2E2	0.183	4404	1394	Sisma Y SLV	0	10.1	0	0	3.2E2	0.183
4405	1394	Sisma X SLD	10	0	0	0	3.2E2	0.183	4406	1394	Sisma Y SLD	0	10	0	0	3.2E2	0.183
4407	1395	Sisma X SLV	10.1	0	0	0	3.2E2	0.183	4408	1395	Sisma Y SLV	0	10.1	0	0	3.2E2	0.183
4409	1395	Sisma X SLD	10	0	0	0	3.2E2	0.183	4410	1395	Sisma Y SLD	0	10	0	0	3.2E2	0.183
4411	1396	Sisma X SLV	10.2	0	0	0	3.2E2	0.183	4412	1396	Sisma Y SLV	0	10.2	0	0	3.2E2	0.183

muratura

Indice	Nodo	Condizione	Fx	Fy	Fz	Mz	Peso	Gamma	Indice	Nodo	Condizione	Fx	Fy	Fz	Mz	Peso	Gamma
4413	1396	Sisma X SLD	10	0	0	0	3.2E2	0.183	4414	1396	Sisma Y SLD	0	10	0	0	3.2E2	0.183
4415	1397	Sisma X SLV	11	0	0	0	3.5E2	0.183	4416	1397	Sisma Y SLV	0	11	0	0	3.5E2	0.183
4417	1397	Sisma X SLD	10.8	0	0	0	3.5E2	0.183	4418	1397	Sisma Y SLD	0	10.8	0	0	3.5E2	0.183
4419	1398	Sisma X SLV	13.1	0	0	0	418.36	0.183	4420	1398	Sisma Y SLV	0	13.1	0	0	418.36	0.183
4421	1398	Sisma X SLD	12.9	0	0	0	418.36	0.183	4422	1398	Sisma Y SLD	0	12.9	0	0	418.36	0.183
4423	1399	Sisma X SLV	13.9	0	0	0	4.4E2	0.183	4424	1399	Sisma Y SLV	0	13.9	0	0	4.4E2	0.183
4425	1399	Sisma X SLD	13.7	0	0	0	4.4E2	0.183	4426	1399	Sisma Y SLD	0	13.7	0	0	4.4E2	0.183
4427	1400	Sisma X SLV	11.1	0	0	0	3.5E2	0.183	4428	1400	Sisma Y SLV	0	11.1	0	0	3.5E2	0.183
4429	1400	Sisma X SLD	10.9	0	0	0	3.5E2	0.183	4430	1400	Sisma Y SLD	0	10.9	0	0	3.5E2	0.183
4431	1401	Sisma X SLV	11.1	0	0	0	3.5E2	0.183	4432	1401	Sisma Y SLV	0	11.1	0	0	3.5E2	0.183
4433	1401	Sisma X SLD	10.9	0	0	0	3.5E2	0.183	4434	1401	Sisma Y SLD	0	10.9	0	0	3.5E2	0.183
4435	1402	Sisma X SLV	11	0	0	0	3.5E2	0.183	4436	1402	Sisma Y SLV	0	11	0	0	3.5E2	0.183
4437	1402	Sisma X SLD	10.9	0	0	0	3.5E2	0.183	4438	1402	Sisma Y SLD	0	10.9	0	0	3.5E2	0.183
4439	1403	Sisma X SLV	11	0	0	0	3.5E2	0.183	4440	1403	Sisma Y SLV	0	11	0	0	3.5E2	0.183
4441	1403	Sisma X SLD	10.8	0	0	0	3.5E2	0.183	4442	1403	Sisma Y SLD	0	10.8	0	0	3.5E2	0.183
4443	1404	Sisma X SLV	11	0	0	0	3.5E2	0.183	4444	1404	Sisma Y SLV	0	11	0	0	3.5E2	0.183
4445	1404	Sisma X SLD	10.8	0	0	0	3.5E2	0.183	4446	1404	Sisma Y SLD	0	10.8	0	0	3.5E2	0.183
4447	1405	Sisma X SLV	10.9	0	0	0	3.5E2	0.183	4448	1405	Sisma Y SLV	0	10.9	0	0	3.5E2	0.183
4449	1405	Sisma X SLD	10.7	0	0	0	3.5E2	0.183	4450	1405	Sisma Y SLD	0	10.7	0	0	3.5E2	0.183
4451	1406	Sisma X SLV	10.8	0	0	0	3.5E2	0.183	4452	1406	Sisma Y SLV	0	10.8	0	0	3.5E2	0.183
4453	1406	Sisma X SLD	10.6	0	0	0	3.5E2	0.183	4454	1406	Sisma Y SLD	0	10.6	0	0	3.5E2	0.183
4455	1407	Sisma X SLV	10.8	0	0	0	3.4E2	0.183	4456	1407	Sisma Y SLV	0	10.8	0	0	3.4E2	0.183
4457	1407	Sisma X SLD	10.6	0	0	0	3.4E2	0.183	4458	1407	Sisma Y SLD	0	10.6	0	0	3.4E2	0.183
4459	1408	Sisma X SLV	10.7	0	0	0	3.4E2	0.183	4460	1408	Sisma Y SLV	0	10.7	0	0	3.4E2	0.183
4461	1408	Sisma X SLD	10.6	0	0	0	3.4E2	0.183	4462	1408	Sisma Y SLD	0	10.6	0	0	3.4E2	0.183
4463	1409	Sisma X SLV	10.7	0	0	0	3.4E2	0.183	4464	1409	Sisma Y SLV	0	10.7	0	0	3.4E2	0.183
4465	1409	Sisma X SLD	10.5	0	0	0	3.4E2	0.183	4466	1409	Sisma Y SLD	0	10.5	0	0	3.4E2	0.183
4467	1410	Sisma X SLV	9.2	0	0	0	2.9E2	0.183	4468	1410	Sisma Y SLV	0	9.2	0	0	2.9E2	0.183
4469	1410	Sisma X SLD	9	0	0	0	2.9E2	0.183	4470	1410	Sisma Y SLD	0	9	0	0	2.9E2	0.183
4471	1411	Sisma X SLV	8.6	0	0	0	2.8E2	0.183	4472	1411	Sisma Y SLV	0	8.6	0	0	2.8E2	0.183
4473	1411	Sisma X SLD	8.5	0	0	0	2.8E2	0.183	4474	1411	Sisma Y SLD	0	8.5	0	0	2.8E2	0.183
4475	1412	Sisma X SLV	14.6	0	0	0	4.7E2	0.183	4476	1412	Sisma Y SLV	0	14.6	0	0	4.7E2	0.183
4477	1412	Sisma X SLD	14.4	0	0	0	4.7E2	0.183	4478	1412	Sisma Y SLD	0	14.4	0	0	4.7E2	0.183
4479	1413	Sisma X SLV	14.7	0	0	0	4.7E2	0.183	4480	1413	Sisma Y SLV	0	14.7	0	0	4.7E2	0.183
4481	1413	Sisma X SLD	14.4	0	0	0	4.7E2	0.183	4482	1413	Sisma Y SLD	0	14.4	0	0	4.7E2	0.183
4483	1414	Sisma X SLV	8.8	0	0	0	281.74	0.183	4484	1414	Sisma Y SLV	0	8.8	0	0	281.74	0.183
4485	1414	Sisma X SLD	8.7	0	0	0	281.74	0.183	4486	1414	Sisma Y SLD	0	8.7	0	0	281.74	0.183
4487	1415	Sisma X SLV	8.9	0	0	0	2.8E2	0.184	4488	1415	Sisma Y SLV	0	8.9	0	0	2.8E2	0.184
4489	1415	Sisma X SLD	8.8	0	0	0	2.8E2	0.184	4490	1415	Sisma Y SLD	0	8.8	0	0	2.8E2	0.184
4491	1416	Sisma X SLV	3.3	0	0	0	1.0E2	0.185	4492	1416	Sisma Y SLV	0	3.3	0	0	1.0E2	0.185
4493	1416	Sisma X SLD	3.2	0	0	0	1.0E2	0.185	4494	1416	Sisma Y SLD	0	3.2	0	0	1.0E2	0.185
4495	1417	Sisma X SLV	4.7	0	0	0	1.5E2	0.186	4496	1417	Sisma Y SLV	0	4.7	0	0	1.5E2	0.186
4497	1417	Sisma X SLD	4.6	0	0	0	1.5E2	0.186	4498	1417	Sisma Y SLD	0	4.6	0	0	1.5E2	0.186
4499	1418	Sisma X SLV	4.7	0	0	0	1.5E2	0.186	4500	1418	Sisma Y SLV	0	4.7	0	0	1.5E2	0.186
4501	1418	Sisma X SLD	4.6	0	0	0	1.5E2	0.186	4502	1418	Sisma Y SLD	0	4.6	0	0	1.5E2	0.186
4503	1419	Sisma X SLV	8.9	0	0	0	2.8E2	0.186	4504	1419	Sisma Y SLV	0	8.9	0	0	2.8E2	0.186
4505	1419	Sisma X SLD	8.8	0	0	0	2.8E2	0.186	4506	1419	Sisma Y SLD	0	8.8	0	0	2.8E2	0.186
4507	1420	Sisma X SLV	5.2	0	0	0	162.55	0.186	4508	1420	Sisma Y SLV	0	5.2	0	0	162.55	0.186
4509	1420	Sisma X SLD	5.1	0	0	0	162.55	0.186	4510	1420	Sisma Y SLD	0	5.1	0	0	162.55	0.186
4511	1421	Sisma X SLV	4.9	0	0	0	1.5E2	0.187	4512	1421	Sisma Y SLV	0	4.9	0	0	1.5E2	0.187
4513	1421	Sisma X SLD	4.8	0	0	0	1.5E2	0.187	4514	1421	Sisma Y SLD	0	4.8	0	0	1.5E2	0.187
4515	1422	Sisma X SLV	10.3	0	0	0	322.93	0.187	4516	1422	Sisma Y SLV	0	10.3	0	0	322.93	0.187
4517	1422	Sisma X SLD	10.1	0	0	0	322.93	0.187	4518	1422	Sisma Y SLD	0	10.1	0	0	322.93	0.187
4519	1423	Sisma X SLV	9.5	0	0	0	3.0E2	0.187	4520	1423	Sisma Y SLV	0	9.5	0	0	3.0E2	0.187
4521	1423	Sisma X SLD	9.3	0	0	0	3.0E2	0.187	4522	1423	Sisma Y SLD	0	9.3	0	0	3.0E2	0.187
4523	1424	Sisma X SLV	3.7	0	0	0	1.1E2	0.187	4524	1424	Sisma Y SLV	0	3.7	0	0	1.1E2	0.187
4525	1424	Sisma X SLD	3.6	0	0	0	1.1E2	0.187	4526	1424	Sisma Y SLD	0	3.6	0	0	1.1E2	0.187
4527	1425	Sisma X SLV	11.6	0	0	0	3.6E2	0.187	4528	1425	Sisma Y SLV	0	11.6	0	0	3.6E2	0.187
4529	1425	Sisma X SLD	11.4	0	0	0	3.6E2	0.187	4530	1425	Sisma Y SLD	0	11.4	0	0	3.6E2	0.187
4531	1426	Sisma X SLV	4.8	0	0	0	149.47	0.188	4532	1426	Sisma Y SLV	0	4.8	0	0	149.47	0.188
4533	1426	Sisma X SLD	4.7	0	0	0	149.47	0.188	4534	1426	Sisma Y SLD	0	4.7	0	0	149.47	0.188
4535	1427	Sisma X SLV	4.8	0	0	0	149.47	0.188	4536	1427	Sisma Y SLV	0	4.8	0	0	149.47	0.188
4537	1427	Sisma X SLD	4.7	0	0	0	149.47	0.188	4538	1427	Sisma Y SLD	0	4.7	0	0	149.47	0.188
4539	1428	Sisma X SLV	9.1	0	0	0	2.8E2	0.188	4540	1428	Sisma Y SLV	0	9.1	0	0	2.8E2	0.188
4541	1428	Sisma X SLD	8.9	0	0	0	2.8E2	0.188	4542	1428	Sisma Y SLD	0	8.9	0	0	2.8E2	0.188
4543	1429	Sisma X SLV	2.8	0	0	0	88.615	0.188	4544	1429	Sisma Y SLV	0	2.8	0	0	88.615	0.188
4545	1429	Sisma X SLD	2.8	0	0	0	88.615	0.188	4546	1429	Sisma Y SLD	0	2.8	0	0	88.615	0.188
4547	1430	Sisma X SLV	10.3	0	0	0	320.18	0.189	4548	1430	Sisma Y SLV	0	10.3	0	0	320.18	0.189
4549	1430	Sisma X SLD	10.1	0	0	0	320.18	0.189	4550	1430	Sisma Y SLD	0	10.1	0	0	320.18	0.189
4551	1431	Sisma X SLV	5.5	0	0	0	1.7E2	0.189	4552	1431	Sisma Y SLV	0	5.5	0	0	1.7E2	0.189
4553	1431	Sisma X SLD	5.4	0	0	0	1.7E2	0.189	4554	1431	Sisma Y SLD	0	5.4	0	0	1.7E2	0.189
4555	1432	Sisma X SLV	5.3	0	0	0	1.6E2	0.189	4556	1432	Sisma Y SLV	0	5.3	0	0	1.6E2	0.189
4557	1432	Sisma X SLD	5.2	0	0	0	1.6E2	0.189	4558	1432	Sisma Y SLD	0	5.2	0	0	1.6E2	0.189
4559	1433	Sisma X SLV	3.6	0	0	0	1.1E2	0.189	4560	1433	Sisma Y SLV	0	3.6	0	0	1.1E2	0.189
4561	1433	Sisma X SLD	3.5	0	0	0	1.1E2	0.189	4562	1433	Sisma Y SLD	0	3.5	0	0	1.1E2	0.189
4563	1434	Sisma X SLV	5	0	0	0	1.5E2	0.19	4564	1434	Sisma Y SLV	0	5	0	0	1.5E2	0.19
4565	1434	Sisma X SLD	4.9	0	0	0	1.5E2	0.19	4566	1434	Sisma Y SLD	0	4.9	0	0	1.5E2	0.19
4567	1435	Sisma X SLV	10.5	0	0	0	3.3E2	0.19	4568	1435	Sisma Y SLV	0	10.5	0	0	3.3E2	0.19
4569	1435	Sisma X SLD	10.4	0	0	0	3.3E2	0.19	4570	1435	Sisma Y SLD	0	10.4	0	0	3.3E2	0.19
4571	1436	Sisma X SLV	4.9	0	0	0	1.5E2	0.19	4572	1436	Sisma Y SLV	0	4.9	0	0	1.5E2	0.19
4573	1436	Sisma X SLD	4.8	0	0	0	1.5E2	0.19	4574	1436	Sisma Y SLD	0	4.8	0	0	1.5E2	0.19
4575	1437	Sisma X SLV	4.9	0	0	0	1.5E2	0.19	4576	1437	Sisma Y SLV	0	4.9	0	0	1.5E2	0.19
4577	1437	Sisma X SLD	4.8	0	0	0	1.5E2	0.19	4578	1437	Sisma Y SLD	0	4.8	0	0	1.5E2	0.19
4579	1438	Sisma X SLV	9.6	0	0	0	3.0E2	0.19	4580	1438	Sisma Y SLV	0	9.6	0	0	3.0E2	0.19
4581	1438	Sisma X SLD	9.5	0	0	0	3.0E2	0.19	4582	1438	Sisma Y SLD	0	9.5	0	0	3.0E2	0.19
4583	1439	Sisma X SLV	9.2	0	0	0	2.8E2	0.19	4584	1439	Sisma Y SLV	0	9.2	0	0	2.8E2	0.19
4585	1439	Sisma X SLD	9.1	0	0	0	2.8E2	0.19	4586	1439	Sisma Y SLD	0	9.1	0	0	2.8E2	0.19
4587	1440	Sisma X SLV	12.1	0	0	0	368.79	0.192	4588	1440	Sisma Y SLV	0	12.1	0	0	368.79	0.192
4589	1440	Sisma X SLD	11.9	0	0	0	368.79	0.192	4590	1440	Sisma Y SLD	0	11.9	0	0	368.79	0.192
4591	1441	Sisma X SLV	9.5	0	0	0	2.9E2	0.192	4592	1441	Sisma Y SLV	0	9.5	0	0	2.9E2	0.192
4593	1441	Sisma X SLD	9.4	0	0	0	2.9E2	0.192	4594	1441	Sisma Y SLD	0	9.4	0	0	2.9E2	0.192
4595	1442	Sisma X SLV	5.4	0	0	0	164.61	0.192	4596	1442	Sisma Y SLV	0	5.4	0	0	164.61	0.192
4597	1442	Sisma X SLD	5.3	0	0	0	164.61	0.192	4598	1442	Sisma Y SLD	0	5.3	0	0	164.61	0.192
4599	1443	Sisma X SLV	5	0	0	0	151.02	0.193	4600	1443	Sisma Y SLV	0	5	0	0	151.02	0.193
4601	1443	Sisma X SLD	4.9	0	0	0	151.02	0.193	4602	1443	Sisma Y SLD	0	4.9	0	0	151.02	0.193
4603	1444	Sisma X SLV	5	0	0	0	151.02	0.193	4604	1444	Sisma Y SLV	0	5	0	0	151.02	0.193
4605	1444	Sisma X SLD	4.9	0	0	0	151.02	0.193	4606	1444	Sisma Y SLD	0	4.9	0	0	151.02	0.193
4607	1445	Sisma X SLV	9.4	0	0	0	2.9E2	0.193	4608	1445	Sisma Y SLV	0	9.4	0	0	2.9E2	0.193
4609	1445	Sisma X SLD	9.3	0	0	0	2.9E2	0.193	4610	1445	Sisma Y SLD	0	9.3	0	0	2.9E2	0.193
4611	1446	Sisma X SLV	4.2	0	0	0	128.28	0.194	4612	1446	Sisma Y SLV	0	4.2	0	0	128.28	0.194
4613	1446	Sisma X SLD	4.2	0	0	0	128.28	0.194	4614	1446	Sisma Y SLD	0	4.2	0	0	128.28	0.194

Indice	Nodo	Condizione	Fx	Fy	Fz	Mz	Peso	Gamma	Indice	Nodo	Condizione	Fx	Fy	Fz	Mz	Peso	Gamma
4615	1447	Sisma X SLV	5.2	0	0	0	1.6E2	0.194	4616	1447	Sisma Y SLV	0	5.2	0	0	1.6E2	0.194
4617	1447	Sisma X SLD	5.1	0	0	0	1.6E2	0.194	4618	1447	Sisma Y SLD	0	5.1	0	0	1.6E2	0.194
4619	1448	Sisma X SLV	10.8	0	0	0	328.2	0.194	4620	1448	Sisma Y SLV	0	10.8	0	0	328.2	0.194
4621	1448	Sisma X SLD	10.7	0	0	0	328.2	0.194	4622	1448	Sisma Y SLD	0	10.7	0	0	328.2	0.194
4623	1449	Sisma X SLV	9.8	0	0	0	3.0E2	0.194	4624	1449	Sisma Y SLV	0	9.8	0	0	3.0E2	0.194
4625	1449	Sisma X SLD	9.7	0	0	0	3.0E2	0.194	4626	1449	Sisma Y SLD	0	9.7	0	0	3.0E2	0.194
4627	1450	Sisma X SLV	10.8	0	0	0	325.84	0.194	4628	1450	Sisma Y SLV	0	10.8	0	0	325.84	0.194
4629	1450	Sisma X SLD	10.6	0	0	0	325.84	0.194	4630	1450	Sisma Y SLD	0	10.6	0	0	325.84	0.194
4631	1451	Sisma X SLV	5.7	0	0	0	1.7E2	0.194	4632	1451	Sisma Y SLV	0	5.7	0	0	1.7E2	0.194
4633	1451	Sisma X SLD	5.6	0	0	0	1.7E2	0.194	4634	1451	Sisma Y SLD	0	5.6	0	0	1.7E2	0.194
4635	1452	Sisma X SLV	5.5	0	0	0	1.7E2	0.195	4636	1452	Sisma Y SLV	0	5.5	0	0	1.7E2	0.195
4637	1452	Sisma X SLD	5.4	0	0	0	1.7E2	0.195	4638	1452	Sisma Y SLD	0	5.4	0	0	1.7E2	0.195
4639	1453	Sisma X SLV	3.8	0	0	0	1.1E2	0.195	4640	1453	Sisma Y SLV	0	3.8	0	0	1.1E2	0.195
4641	1453	Sisma X SLD	3.7	0	0	0	1.1E2	0.195	4642	1453	Sisma Y SLD	0	3.7	0	0	1.1E2	0.195
4643	1454	Sisma X SLV	5.1	0	0	0	1.5E2	0.196	4644	1454	Sisma Y SLV	0	5.1	0	0	1.5E2	0.196
4645	1454	Sisma X SLD	5	0	0	0	1.5E2	0.196	4646	1454	Sisma Y SLD	0	5	0	0	1.5E2	0.196
4647	1455	Sisma X SLV	5.1	0	0	0	1.5E2	0.196	4648	1455	Sisma Y SLV	0	5.1	0	0	1.5E2	0.196
4649	1455	Sisma X SLD	5	0	0	0	1.5E2	0.196	4650	1455	Sisma Y SLD	0	5	0	0	1.5E2	0.196
4651	1456	Sisma X SLV	5.1	0	0	0	1.5E2	0.196	4652	1456	Sisma Y SLV	0	5.1	0	0	1.5E2	0.196
4653	1456	Sisma X SLD	5	0	0	0	1.5E2	0.196	4654	1456	Sisma Y SLD	0	5	0	0	1.5E2	0.196
4655	1457	Sisma X SLV	5.1	0	0	0	1.5E2	0.196	4656	1457	Sisma Y SLV	0	5.1	0	0	1.5E2	0.196
4657	1457	Sisma X SLD	5	0	0	0	1.5E2	0.196	4658	1457	Sisma Y SLD	0	5	0	0	1.5E2	0.196
4659	1458	Sisma X SLV	9.6	0	0	0	2.9E2	0.196	4660	1458	Sisma Y SLV	0	9.6	0	0	2.9E2	0.196
4661	1458	Sisma X SLD	9.5	0	0	0	2.9E2	0.196	4662	1458	Sisma Y SLD	0	9.5	0	0	2.9E2	0.196
4663	1459	Sisma X SLV	12.6	0	0	0	3.8E2	0.196	4664	1459	Sisma Y SLV	0	12.6	0	0	3.8E2	0.196
4665	1459	Sisma X SLD	12.4	0	0	0	3.8E2	0.196	4666	1459	Sisma Y SLD	0	12.4	0	0	3.8E2	0.196
4667	1460	Sisma X SLV	3	0	0	0	89.617	0.197	4668	1460	Sisma Y SLV	0	3	0	0	89.617	0.197
4669	1460	Sisma X SLD	3	0	0	0	89.617	0.197	4670	1460	Sisma Y SLD	0	3	0	0	89.617	0.197
4671	1461	Sisma X SLV	5.3	0	0	0	1.6E2	0.198	4672	1461	Sisma Y SLV	0	5.3	0	0	1.6E2	0.198
4673	1461	Sisma X SLD	5.3	0	0	0	1.6E2	0.198	4674	1461	Sisma Y SLD	0	5.3	0	0	1.6E2	0.198
4675	1462	Sisma X SLV	11.2	0	0	0	3.3E2	0.198	4676	1462	Sisma Y SLV	0	11.2	0	0	3.3E2	0.198
4677	1462	Sisma X SLD	11	0	0	0	3.3E2	0.198	4678	1462	Sisma Y SLD	0	11	0	0	3.3E2	0.198
4679	1463	Sisma X SLV	10.1	0	0	0	3.0E2	0.198	4680	1463	Sisma Y SLV	0	10.1	0	0	3.0E2	0.198
4681	1463	Sisma X SLD	9.9	0	0	0	3.0E2	0.198	4682	1463	Sisma Y SLD	0	9.9	0	0	3.0E2	0.198
4683	1464	Sisma X SLV	5.7	0	0	0	1.7E2	0.199	4684	1464	Sisma Y SLV	0	5.7	0	0	1.7E2	0.199
4685	1464	Sisma X SLD	5.6	0	0	0	1.7E2	0.199	4686	1464	Sisma Y SLD	0	5.6	0	0	1.7E2	0.199
4687	1465	Sisma X SLV	10.2	0	0	0	3.0E2	0.199	4688	1465	Sisma Y SLV	0	10.2	0	0	3.0E2	0.199
4689	1465	Sisma X SLD	10	0	0	0	3.0E2	0.199	4690	1465	Sisma Y SLD	0	10	0	0	3.0E2	0.199
4691	1466	Sisma X SLV	12.9	0	0	0	3.8E2	0.199	4692	1466	Sisma Y SLV	0	12.9	0	0	3.8E2	0.199
4693	1466	Sisma X SLD	12.7	0	0	0	3.8E2	0.199	4694	1466	Sisma Y SLD	0	12.7	0	0	3.8E2	0.199
4695	1467	Sisma X SLV	14.5	0	0	0	4.3E2	0.199	4696	1467	Sisma Y SLV	0	14.5	0	0	4.3E2	0.199
4697	1467	Sisma X SLD	14.2	0	0	0	4.3E2	0.199	4698	1467	Sisma Y SLD	0	14.2	0	0	4.3E2	0.199
4699	1468	Sisma X SLV	14.4	0	0	0	4.2E2	0.199	4700	1468	Sisma Y SLV	0	14.4	0	0	4.2E2	0.199
4701	1468	Sisma X SLD	14.1	0	0	0	4.2E2	0.199	4702	1468	Sisma Y SLD	0	14.1	0	0	4.2E2	0.199
4703	1469	Sisma X SLV	10	0	0	0	2.9E2	0.199	4704	1469	Sisma Y SLV	0	10	0	0	2.9E2	0.199
4705	1469	Sisma X SLD	9.8	0	0	0	2.9E2	0.199	4706	1469	Sisma Y SLD	0	9.8	0	0	2.9E2	0.199
4707	1470	Sisma X SLV	5.2	0	0	0	1.5E2	0.199	4708	1470	Sisma Y SLV	0	5.2	0	0	1.5E2	0.199
4709	1470	Sisma X SLD	5.2	0	0	0	1.5E2	0.199	4710	1470	Sisma Y SLD	0	5.2	0	0	1.5E2	0.199
4711	1471	Sisma X SLV	5.2	0	0	0	1.5E2	0.199	4712	1471	Sisma Y SLV	0	5.2	0	0	1.5E2	0.199
4713	1471	Sisma X SLD	5.2	0	0	0	1.5E2	0.199	4714	1471	Sisma Y SLD	0	5.2	0	0	1.5E2	0.199
4715	1472	Sisma X SLV	9.9	0	0	0	2.9E2	0.2	4716	1472	Sisma Y SLV	0	9.9	0	0	2.9E2	0.2
4717	1472	Sisma X SLD	9.8	0	0	0	2.9E2	0.2	4718	1472	Sisma Y SLD	0	9.8	0	0	2.9E2	0.2
4719	1473	Sisma X SLV	11.4	0	0	0	3.3E2	0.2	4720	1473	Sisma Y SLV	0	11.4	0	0	3.3E2	0.2
4721	1473	Sisma X SLD	11.2	0	0	0	3.3E2	0.2	4722	1473	Sisma Y SLD	0	11.2	0	0	3.3E2	0.2
4723	1474	Sisma X SLV	6	0	0	0	176.29	0.2	4724	1474	Sisma Y SLV	0	6	0	0	176.29	0.2
4725	1474	Sisma X SLD	5.9	0	0	0	176.29	0.2	4726	1474	Sisma Y SLD	0	5.9	0	0	176.29	0.2
4727	1475	Sisma X SLV	4.2	0	0	0	1.2E2	0.201	4728	1475	Sisma Y SLV	0	4.2	0	0	1.2E2	0.201
4729	1475	Sisma X SLD	4.2	0	0	0	1.2E2	0.201	4730	1475	Sisma Y SLD	0	4.2	0	0	1.2E2	0.201
4731	1476	Sisma X SLV	13.3	0	0	0	3.9E2	0.202	4732	1476	Sisma Y SLV	0	13.3	0	0	3.9E2	0.202
4733	1476	Sisma X SLD	13.1	0	0	0	3.9E2	0.202	4734	1476	Sisma Y SLD	0	13.1	0	0	3.9E2	0.202
4735	1477	Sisma X SLV	5.6	0	0	0	1.6E2	0.203	4736	1477	Sisma Y SLV	0	5.6	0	0	1.6E2	0.203
4737	1477	Sisma X SLD	5.5	0	0	0	1.6E2	0.203	4738	1477	Sisma Y SLD	0	5.5	0	0	1.6E2	0.203
4739	1478	Sisma X SLV	11.7	0	0	0	3.4E2	0.203	4740	1478	Sisma Y SLV	0	11.7	0	0	3.4E2	0.203
4741	1478	Sisma X SLD	11.5	0	0	0	3.4E2	0.203	4742	1478	Sisma Y SLD	0	11.5	0	0	3.4E2	0.203
4743	1479	Sisma X SLV	10.4	0	0	0	3.0E2	0.203	4744	1479	Sisma Y SLV	0	10.4	0	0	3.0E2	0.203
4745	1479	Sisma X SLD	10.2	0	0	0	3.0E2	0.203	4746	1479	Sisma Y SLD	0	10.2	0	0	3.0E2	0.203
4747	1480	Sisma X SLV	5.9	0	0	0	1.7E2	0.203	4748	1480	Sisma Y SLV	0	5.9	0	0	1.7E2	0.203
4749	1480	Sisma X SLD	5.8	0	0	0	1.7E2	0.203	4750	1480	Sisma Y SLD	0	5.8	0	0	1.7E2	0.203
4751	1481	Sisma X SLV	5.4	0	0	0	1.6E2	0.204	4752	1481	Sisma Y SLV	0	5.4	0	0	1.6E2	0.204
4753	1481	Sisma X SLD	5.4	0	0	0	1.6E2	0.204	4754	1481	Sisma Y SLD	0	5.4	0	0	1.6E2	0.204
4755	1482	Sisma X SLV	5.4	0	0	0	1.6E2	0.204	4756	1482	Sisma Y SLV	0	5.4	0	0	1.6E2	0.204
4757	1482	Sisma X SLD	5.4	0	0	0	1.6E2	0.204	4758	1482	Sisma Y SLD	0	5.4	0	0	1.6E2	0.204
4759	1483	Sisma X SLV	10.3	0	0	0	3.0E2	0.204	4760	1483	Sisma Y SLV	0	10.3	0	0	3.0E2	0.204
4761	1483	Sisma X SLD	10.1	0	0	0	3.0E2	0.204	4762	1483	Sisma Y SLD	0	10.1	0	0	3.0E2	0.204
4763	1484	Sisma X SLV	4.6	0	0	0	1.3E2	0.204	4764	1484	Sisma Y SLV	0	4.6	0	0	1.3E2	0.204
4765	1484	Sisma X SLD	4.6	0	0	0	1.3E2	0.204	4766	1484	Sisma Y SLD	0	4.6	0	0	1.3E2	0.204
4767	1485	Sisma X SLV	3.4	0	0	0	97.378	0.205	4768	1485	Sisma Y SLV	0	3.4	0	0	97.378	0.205
4769	1485	Sisma X SLD	3.4	0	0	0	97.378	0.205	4770	1485	Sisma Y SLD	0	3.4	0	0	97.378	0.205
4771	1486	Sisma X SLV	4.7	0	0	0	1.3E2	0.206	4772	1486	Sisma Y SLV	0	4.7	0	0	1.3E2	0.206
4773	1486	Sisma X SLD	4.6	0	0	0	1.3E2	0.206	4774	1486	Sisma Y SLD	0	4.6	0	0	1.3E2	0.206
4775	1487	Sisma X SLV	10.9	0	0	0	3.1E2	0.207	4776	1487	Sisma Y SLV	0	10.9	0	0	3.1E2	0.207
4777	1487	Sisma X SLD	10.7	0	0	0	3.1E2	0.207	4778	1487	Sisma Y SLD	0	10.7	0	0	3.1E2	0.207
4779	1488	Sisma X SLV	12.1	0	0	0	3.4E2	0.207	4780	1488	Sisma Y SLV	0	12.1	0	0	3.4E2	0.207
4781	1488	Sisma X SLD	11.9	0	0	0	3.4E2	0.207	4782	1488	Sisma Y SLD	0	11.9	0	0	3.4E2	0.207
4783	1489	Sisma X SLV	6.4	0	0	0	1.8E2	0.207	4784	1489	Sisma Y SLV	0	6.4	0	0	1.8E2	0.207
4785	1489	Sisma X SLD	6.3	0	0	0	1.8E2	0.207	4786	1489	Sisma Y SLD	0	6.3	0	0	1.8E2	0.207
4787	1490	Sisma X SLV	14.1	0	0	0	4.0E2	0.208	4788	1490	Sisma Y SLV	0	14.1	0	0	4.0E2	0.208
4789	1490	Sisma X SLD	13.9	0	0	0	4.0E2	0.208	4790	1490	Sisma Y SLD	0	13.9	0	0	4.0E2	0.208
4791	1491	Sisma X SLV	5.9	0	0	0	1.7E2	0.208	4792	1491	Sisma Y SLV	0	5.9	0	0	1.7E2	0.208
4793	1491	Sisma X SLD	5.8	0	0	0	1.7E2	0.208	4794	1491	Sisma Y SLD	0	5.8	0	0	1.7E2	0.208
4795	1492	Sisma X SLV	12.3	0	0	0	3.5E2	0.208	4796	1492	Sisma Y SLV	0	12.3	0	0	3.5E2	0.208
4797	1492	Sisma X SLD	12.1	0	0	0	3.5E2	0.208	4798	1492	Sisma Y SLD	0	12.1	0	0	3.5E2	0.208
4799	1493	Sisma X SLV	10.8	0	0	0	3.0E2	0.208	4800	1493	Sisma Y SLV	0	10.8	0	0	3.0E2	0.208
4801	1493	Sisma X SLD	10.6	0	0	0	3.0E2	0.208	4802	1493	Sisma Y SLD	0	10.6	0	0	3.0E2	0.208
4803	1494	Sisma X SLV	6.2	0	0	0	1.8E2	0.209	4804	1494	Sisma Y SLV	0	6.2	0	0	1.8E2	0.209
4805	1494	Sisma X SLD	6.1	0	0	0	1.8E2	0.209	4806	1494	Sisma Y SLD	0	6.1	0	0	1.8E2	0.209
4807	1495	Sisma X SLV	5.7	0	0	0	1.6E2	0.209	4808	1495	Sisma Y SLV	0	5.7	0	0	1.6E2	0.209
4809	1495	Sisma X SLD	5.6	0	0	0	1.6E2	0.209	4810	1495	Sisma Y SLD	0	5.6	0	0	1.6E2	0.209
4811	1496	Sisma X SLV	5.7	0	0	0	1.6E2	0.209	4812	1496	Sisma Y SLV	0	5.7	0	0	1.6E2	0.209
4813	1496	Sisma X SLD	5.6	0	0	0	1.6E2	0.209	4814	1496	Sisma Y SLD	0	5.6	0	0	1.6E2	0.209
4815	1497	Sisma X SLV	10.8	0	0	0	3.0E2	0.209	4816	1497	Sisma Y SLV	0	10.8	0	0	3.0E2	0.209
4817	1497	Sisma X SLD	10.6	0	0	0	3.0E2	0.209	4818	1497	Sisma Y SLD	0	10.6	0	0	3.0E2	0.209
4819	1498	Sisma X SLV	8.6	0	0	0	2.4E2	0.21	4820	1498	Sisma Y SLV	0	8.6	0	0	2.4E2	0.21
4821	1498	Sisma X SLD	8.5	0	0	0	2.4E2	0.21	4822	1498	Sisma Y SLD	0	8.5	0	0	2.4E2	0.21

muratura

Indice	Nodo	Condizione	Fx	Fy	Fz	Mz	Peso	Gamma	Indice	Nodo	Condizione	Fx	Fy	Fz	Mz	Peso	Gamma
4823	1499	Sisma X SLV	5.1	0	0	0	140.68	0.211	4824	1499	Sisma Y SLV	0	5.1	0	0	140.68	0.211
4825	1499	Sisma X SLD	5	0	0	0	140.68	0.211	4826	1499	Sisma Y SLD	0	5	0	0	140.68	0.211
4827	1500	Sisma X SLV	5	0	0	0	1.4E2	0.214	4828	1500	Sisma Y SLV	0	5	0	0	1.4E2	0.214
4829	1500	Sisma X SLD	4.9	0	0	0	1.4E2	0.214	4830	1500	Sisma Y SLD	0	4.9	0	0	1.4E2	0.214
4831	1501	Sisma X SLV	5.2	0	0	0	1.4E2	0.214	4832	1501	Sisma Y SLV	0	5.2	0	0	1.4E2	0.214
4833	1501	Sisma X SLD	5.2	0	0	0	1.4E2	0.214	4834	1501	Sisma Y SLD	0	5.2	0	0	1.4E2	0.214
4835	1502	Sisma X SLV	4.7	0	0	0	1.3E2	0.214	4836	1502	Sisma Y SLV	0	4.7	0	0	1.3E2	0.214
4837	1502	Sisma X SLD	4.7	0	0	0	1.3E2	0.214	4838	1502	Sisma Y SLD	0	4.7	0	0	1.3E2	0.214
4839	1503	Sisma X SLV	7.1	0	0	0	2.0E2	0.215	4840	1503	Sisma Y SLV	0	7.1	0	0	2.0E2	0.215
4841	1503	Sisma X SLD	7	0	0	0	2.0E2	0.215	4842	1503	Sisma Y SLD	0	7	0	0	2.0E2	0.215
4843	1504	Sisma X SLV	5.7	0	0	0	1.6E2	0.215	4844	1504	Sisma Y SLV	0	5.7	0	0	1.6E2	0.215
4845	1504	Sisma X SLD	5.6	0	0	0	1.6E2	0.215	4846	1504	Sisma Y SLD	0	5.6	0	0	1.6E2	0.215
4847	1505	Sisma X SLV	1.9	0	0	0	51.734	0.215	4848	1505	Sisma Y SLV	0	1.9	0	0	51.734	0.215
4849	1505	Sisma X SLD	1.9	0	0	0	51.734	0.215	4850	1505	Sisma Y SLD	0	1.9	0	0	51.734	0.215
4851	1506	Sisma X SLV	2.5	0	0	0	68.269	0.215	4852	1506	Sisma Y SLV	0	2.5	0	0	68.269	0.215
4853	1506	Sisma X SLD	2.5	0	0	0	68.269	0.215	4854	1506	Sisma Y SLD	0	2.5	0	0	68.269	0.215
4855	1507	Sisma X SLV	3.3	0	0	0	91.503	0.215	4856	1507	Sisma Y SLV	0	3.3	0	0	91.503	0.215
4857	1507	Sisma X SLD	3.3	0	0	0	91.503	0.215	4858	1507	Sisma Y SLD	0	3.3	0	0	91.503	0.215
4859	1508	Sisma X SLV	3.1	0	0	0	83.511	0.215	4860	1508	Sisma Y SLV	0	3.1	0	0	83.511	0.215
4861	1508	Sisma X SLD	3	0	0	0	83.511	0.215	4862	1508	Sisma Y SLD	0	3	0	0	83.511	0.215
4863	1509	Sisma X SLV	3	0	0	0	81.708	0.215	4864	1509	Sisma Y SLV	0	3	0	0	81.708	0.215
4865	1509	Sisma X SLD	2.9	0	0	0	81.708	0.215	4866	1509	Sisma Y SLD	0	2.9	0	0	81.708	0.215
4867	1510	Sisma X SLV	2.9	0	0	0	80.204	0.215	4868	1510	Sisma Y SLV	0	2.9	0	0	80.204	0.215
4869	1510	Sisma X SLD	2.9	0	0	0	80.204	0.215	4870	1510	Sisma Y SLD	0	2.9	0	0	80.204	0.215
4871	1511	Sisma X SLV	8.1	0	0	0	2.2E2	0.215	4872	1511	Sisma Y SLV	0	8.1	0	0	2.2E2	0.215
4873	1511	Sisma X SLD	8	0	0	0	2.2E2	0.215	4874	1511	Sisma Y SLD	0	8	0	0	2.2E2	0.215
4875	1512	Sisma X SLV	4.9	0	0	0	1.3E2	0.215	4876	1512	Sisma Y SLV	0	4.9	0	0	1.3E2	0.215
4877	1512	Sisma X SLD	4.8	0	0	0	1.3E2	0.215	4878	1512	Sisma Y SLD	0	4.8	0	0	1.3E2	0.215
4879	1513	Sisma X SLV	6.5	0	0	0	1.8E2	0.215	4880	1513	Sisma Y SLV	0	6.5	0	0	1.8E2	0.215
4881	1513	Sisma X SLD	6.3	0	0	0	1.8E2	0.215	4882	1513	Sisma Y SLD	0	6.3	0	0	1.8E2	0.215
4883	1514	Sisma X SLV	2.5	0	0	0	67.61	0.215	4884	1514	Sisma Y SLV	0	2.5	0	0	67.61	0.215
4885	1514	Sisma X SLD	2.4	0	0	0	67.61	0.215	4886	1514	Sisma Y SLD	0	2.4	0	0	67.61	0.215
4887	1515	Sisma X SLV	3.3	0	0	0	88.909	0.215	4888	1515	Sisma Y SLV	0	3.3	0	0	88.909	0.215
4889	1515	Sisma X SLD	3.2	0	0	0	88.909	0.215	4890	1515	Sisma Y SLD	0	3.2	0	0	88.909	0.215
4891	1516	Sisma X SLV	3	0	0	0	81.708	0.215	4892	1516	Sisma Y SLV	0	3	0	0	81.708	0.215
4893	1516	Sisma X SLD	2.9	0	0	0	81.708	0.215	4894	1516	Sisma Y SLD	0	2.9	0	0	81.708	0.215
4895	1517	Sisma X SLV	2.9	0	0	0	80.204	0.215	4896	1517	Sisma Y SLV	0	2.9	0	0	80.204	0.215
4897	1517	Sisma X SLD	2.9	0	0	0	80.204	0.215	4898	1517	Sisma Y SLD	0	2.9	0	0	80.204	0.215
4899	1518	Sisma X SLV	7.9	0	0	0	2.2E2	0.215	4900	1518	Sisma Y SLV	0	7.9	0	0	2.2E2	0.215
4901	1518	Sisma X SLD	7.8	0	0	0	2.2E2	0.215	4902	1518	Sisma Y SLD	0	7.8	0	0	2.2E2	0.215
4903	1519	Sisma X SLV	7.4	0	0	0	2.0E2	0.215	4904	1519	Sisma Y SLV	0	7.4	0	0	2.0E2	0.215
4905	1519	Sisma X SLD	7.3	0	0	0	2.0E2	0.215	4906	1519	Sisma Y SLD	0	7.3	0	0	2.0E2	0.215
4907	1520	Sisma X SLV	6.3	0	0	0	1.7E2	0.215	4908	1520	Sisma Y SLV	0	6.3	0	0	1.7E2	0.215
4909	1520	Sisma X SLD	6.2	0	0	0	1.7E2	0.215	4910	1520	Sisma Y SLD	0	6.2	0	0	1.7E2	0.215
4911	1521	Sisma X SLV	5.6	0	0	0	153.05	0.215	4912	1521	Sisma Y SLV	0	5.6	0	0	153.05	0.215
4913	1521	Sisma X SLD	5.5	0	0	0	153.05	0.215	4914	1521	Sisma Y SLD	0	5.5	0	0	153.05	0.215
4915	1522	Sisma X SLV	5.7	0	0	0	1.5E2	0.215	4916	1522	Sisma Y SLV	0	5.7	0	0	1.5E2	0.215
4917	1522	Sisma X SLD	5.6	0	0	0	1.5E2	0.215	4918	1522	Sisma Y SLD	0	5.6	0	0	1.5E2	0.215
4919	1523	Sisma X SLV	5.6	0	0	0	1.5E2	0.215	4920	1523	Sisma Y SLV	0	5.6	0	0	1.5E2	0.215
4921	1523	Sisma X SLD	5.5	0	0	0	1.5E2	0.215	4922	1523	Sisma Y SLD	0	5.5	0	0	1.5E2	0.215
4923	1524	Sisma X SLV	4.8	0	0	0	1.3E2	0.215	4924	1524	Sisma Y SLV	0	4.8	0	0	1.3E2	0.215
4925	1524	Sisma X SLD	4.7	0	0	0	1.3E2	0.215	4926	1524	Sisma Y SLD	0	4.7	0	0	1.3E2	0.215
4927	1525	Sisma X SLV	6.7	0	0	0	1.7E2	0.234	4928	1525	Sisma Y SLV	0	6.7	0	0	1.7E2	0.234
4929	1525	Sisma X SLD	6.6	0	0	0	1.7E2	0.234	4930	1525	Sisma Y SLD	0	6.6	0	0	1.7E2	0.234
4931	1526	Sisma X SLV	4.4	0	0	0	1.1E2	0.243	4932	1526	Sisma Y SLV	0	4.4	0	0	1.1E2	0.243
4933	1526	Sisma X SLD	4.4	0	0	0	1.1E2	0.243	4934	1526	Sisma Y SLD	0	4.4	0	0	1.1E2	0.243
4935	1527	Sisma X SLV	6.9	0	0	0	166.72	0.243	4936	1527	Sisma Y SLV	0	6.9	0	0	166.72	0.243
4937	1527	Sisma X SLD	6.8	0	0	0	166.72	0.243	4938	1527	Sisma Y SLD	0	6.8	0	0	166.72	0.243
4939	1528	Sisma X SLV	5.9	0	0	0	1.4E2	0.243	4940	1528	Sisma Y SLV	0	5.9	0	0	1.4E2	0.243
4941	1528	Sisma X SLD	5.8	0	0	0	1.4E2	0.243	4942	1528	Sisma Y SLD	0	5.8	0	0	1.4E2	0.243
4943	1529	Sisma X SLV	5.9	0	0	0	1.4E2	0.243	4944	1529	Sisma Y SLV	0	5.9	0	0	1.4E2	0.243
4945	1529	Sisma X SLD	5.8	0	0	0	1.4E2	0.243	4946	1529	Sisma Y SLD	0	5.8	0	0	1.4E2	0.243
4947	1530	Sisma X SLV	5.6	0	0	0	1.3E2	0.243	4948	1530	Sisma Y SLV	0	5.6	0	0	1.3E2	0.243
4949	1530	Sisma X SLD	5.5	0	0	0	1.3E2	0.243	4950	1530	Sisma Y SLD	0	5.5	0	0	1.3E2	0.243
4951	1531	Sisma X SLV	5.6	0	0	0	1.4E2	0.243	4952	1531	Sisma Y SLV	0	5.6	0	0	1.4E2	0.243
4953	1531	Sisma X SLD	5.6	0	0	0	1.4E2	0.243	4954	1531	Sisma Y SLD	0	5.6	0	0	1.4E2	0.243
4955	1532	Sisma X SLV	4.4	0	0	0	105.89	0.243	4956	1532	Sisma Y SLV	0	4.4	0	0	105.89	0.243
4957	1532	Sisma X SLD	4.3	0	0	0	105.89	0.243	4958	1532	Sisma Y SLD	0	4.3	0	0	105.89	0.243
4959	1533	Sisma X SLV	6.7	0	0	0	1.6E2	0.243	4960	1533	Sisma Y SLV	0	6.7	0	0	1.6E2	0.243
4961	1533	Sisma X SLD	6.6	0	0	0	1.6E2	0.243	4962	1533	Sisma Y SLD	0	6.6	0	0	1.6E2	0.243
4963	1534	Sisma X SLV	14	0	0	0	3.4E2	0.243	4964	1534	Sisma Y SLV	0	14	0	0	3.4E2	0.243
4965	1534	Sisma X SLD	13.8	0	0	0	3.4E2	0.243	4966	1534	Sisma Y SLD	0	13.8	0	0	3.4E2	0.243
4967	1535	Sisma X SLV	13.1	0	0	0	3.2E2	0.243	4968	1535	Sisma Y SLV	0	13.1	0	0	3.2E2	0.243
4969	1535	Sisma X SLD	12.9	0	0	0	3.2E2	0.243	4970	1535	Sisma Y SLD	0	12.9	0	0	3.2E2	0.243
4971	1536	Sisma X SLV	8.7	0	0	0	2.1E2	0.243	4972	1536	Sisma Y SLV	0	8.7	0	0	2.1E2	0.243
4973	1536	Sisma X SLD	8.6	0	0	0	2.1E2	0.243	4974	1536	Sisma Y SLD	0	8.6	0	0	2.1E2	0.243
4975	1537	Sisma X SLV	6.5	0	0	0	1.6E2	0.243	4976	1537	Sisma Y SLV	0	6.5	0	0	1.6E2	0.243
4977	1537	Sisma X SLD	6.4	0	0	0	1.6E2	0.243	4978	1537	Sisma Y SLD	0	6.4	0	0	1.6E2	0.243
4979	1538	Sisma X SLV	4.4	0	0	0	1.1E2	0.243	4980	1538	Sisma Y SLV	0	4.4	0	0	1.1E2	0.243
4981	1538	Sisma X SLD	4.3	0	0	0	1.1E2	0.243	4982	1538	Sisma Y SLD	0	4.3	0	0	1.1E2	0.243
4983	1539	Sisma X SLV	6.4	0	0	0	1.5E2	0.243	4984	1539	Sisma Y SLV	0	6.4	0	0	1.5E2	0.243
4985	1539	Sisma X SLD	6.3	0	0	0	1.5E2	0.243	4986	1539	Sisma Y SLD	0	6.3	0	0	1.5E2	0.243
4987	1540	Sisma X SLV	6.1	0	0	0	1.5E2	0.243	4988	1540	Sisma Y SLV	0	6.1	0	0	1.5E2	0.243
4989	1540	Sisma X SLD	6	0	0	0	1.5E2	0.243	4990	1540	Sisma Y SLD	0	6	0	0	1.5E2	0.243
4991	1541	Sisma X SLV	3.2	0	0	0	78.228	0.243	4992	1541	Sisma Y SLV	0	3.2	0	0	78.228	0.243
4993	1541	Sisma X SLD	3.2	0	0	0	78.228	0.243	4994	1541	Sisma Y SLD	0	3.2	0	0	78.228	0.243
4995	1542	Sisma X SLV	5.4	0	0	0	1.3E2	0.243	4996	1542	Sisma Y SLV	0	5.4	0	0	1.3E2	0.243
4997	1542	Sisma X SLD	5.3	0	0	0	1.3E2	0.243	4998	1542	Sisma Y SLD	0	5.3	0	0	1.3E2	0.243
4999	1543	Sisma X SLV	7.3	0	0	0	1.8E2	0.243	5000	1543	Sisma Y SLV	0	7.3	0	0	1.8E2	0.243
5001	1543	Sisma X SLD	7.2	0	0	0	1.8E2	0.243	5002	1543	Sisma Y SLD	0	7.2	0	0	1.8E2	0.243
5003	1544	Sisma X SLV	16.3	0	0	0	392.95	0.243	5004	1544	Sisma Y SLV	0	16.3	0	0	392.95	0.243
5005	1544	Sisma X SLD	16	0	0	0	392.95	0.243	5006	1544	Sisma Y SLD	0	16	0	0	392.95	0.243
5007	1545	Sisma X SLV	5.9	0	0	0	1.4E2	0.243	5008	1545	Sisma Y SLV	0	5.9	0	0	1.4E2	0.243
5009	1545	Sisma X SLD	5.8	0	0	0	1.4E2	0.243	5010	1545	Sisma Y SLD	0	5.8	0	0	1.4E2	0.243
5011	1546	Sisma X SLV	6.5	0	0	0	1.6E2	0.243	5012	1546	Sisma Y SLV	0	6.5	0	0	1.6E2	0.243
5013	1546	Sisma X SLD	6.4	0	0	0	1.6E2	0.243	5014	1546	Sisma Y SLD	0	6.4	0	0	1.6E2	0.243
5015	1547	Sisma X SLV	6.4	0	0	0	1.6E2	0.243	5016	1547	Sisma Y SLV	0	6.4	0	0	1.6E2	0.243
5017	1547	Sisma X SLD	6.3	0	0	0	1.6E2	0.243	5018	1547	Sisma Y SLD	0	6.3	0	0	1.6E2	0.243
5019	1548	Sisma X SLV	5.6	0	0	0	135.73	0.243	5020	1548	Sisma Y SLV	0	5.6	0	0	135.73	0.243
5021	1548	Sisma X SLD	5.5	0	0	0	135.73	0.243	5022	1548	Sisma Y SLD	0	5.5	0	0	135.73	0.243
5023	1549	Sisma X SLV	5.7	0	0	0	1.4E2	0.243	5024	1549	Sisma Y SLV	0	5.7	0	0	1.4E2	0.243

Indice	Nodo	Condizione	Fx	Fy	Fz	Mz	Peso	Gamma	Indice	Nodo	Condizione	Fx	Fy	Fz	Mz	Peso	Gamma
5025	1549	Sisma X SLD	5.6	0	0	0	1.4E2	0.243	5026	1549	Sisma Y SLD	0	5.6	0	0	1.4E2	0.243
5027	1550	Sisma X SLV	5.2	0	0	0	1.3E2	0.243	5028	1550	Sisma Y SLV	0	5.2	0	0	1.3E2	0.243
5029	1550	Sisma X SLD	5.1	0	0	0	1.3E2	0.243	5030	1550	Sisma Y SLD	0	5.1	0	0	1.3E2	0.243
5031	1551	Sisma X SLV	6.1	0	0	0	147.25	0.243	5032	1551	Sisma Y SLV	0	6.1	0	0	147.25	0.243
5033	1551	Sisma X SLD	6	0	0	0	147.25	0.243	5034	1551	Sisma Y SLD	0	6	0	0	147.25	0.243
5035	1552	Sisma X SLV	12.8	0	0	0	3.1E2	0.243	5036	1552	Sisma Y SLV	0	12.8	0	0	3.1E2	0.243
5037	1552	Sisma X SLD	12.6	0	0	0	3.1E2	0.243	5038	1552	Sisma Y SLD	0	12.6	0	0	3.1E2	0.243
5039	1553	Sisma X SLV	12.5	0	0	0	3.0E2	0.243	5040	1553	Sisma Y SLV	0	12.5	0	0	3.0E2	0.243
5041	1553	Sisma X SLD	12.3	0	0	0	3.0E2	0.243	5042	1553	Sisma Y SLD	0	12.3	0	0	3.0E2	0.243
5043	1554	Sisma X SLV	11.5	0	0	0	2.8E2	0.244	5044	1554	Sisma Y SLV	0	11.5	0	0	2.8E2	0.244
5045	1554	Sisma X SLD	11.3	0	0	0	2.8E2	0.244	5046	1554	Sisma Y SLD	0	11.3	0	0	2.8E2	0.244
5047	1555	Sisma X SLV	11.4	0	0	0	2.7E2	0.244	5048	1555	Sisma Y SLV	0	11.4	0	0	2.7E2	0.244
5049	1555	Sisma X SLD	11.2	0	0	0	2.7E2	0.244	5050	1555	Sisma Y SLD	0	11.2	0	0	2.7E2	0.244
5051	1556	Sisma X SLV	12.1	0	0	0	2.9E2	0.244	5052	1556	Sisma Y SLV	0	12.1	0	0	2.9E2	0.244
5053	1556	Sisma X SLD	11.9	0	0	0	2.9E2	0.244	5054	1556	Sisma Y SLD	0	11.9	0	0	2.9E2	0.244
5055	1557	Sisma X SLV	13.2	0	0	0	3.2E2	0.244	5056	1557	Sisma Y SLV	0	13.2	0	0	3.2E2	0.244
5057	1557	Sisma X SLD	13	0	0	0	3.2E2	0.244	5058	1557	Sisma Y SLD	0	13	0	0	3.2E2	0.244
5059	1558	Sisma X SLV	13	0	0	0	310.94	0.244	5060	1558	Sisma Y SLV	0	13	0	0	310.94	0.244
5061	1558	Sisma X SLD	12.7	0	0	0	310.94	0.244	5062	1558	Sisma Y SLD	0	12.7	0	0	310.94	0.244
5063	1559	Sisma X SLV	11.7	0	0	0	2.8E2	0.244	5064	1559	Sisma Y SLV	0	11.7	0	0	2.8E2	0.244
5065	1559	Sisma X SLD	11.5	0	0	0	2.8E2	0.244	5066	1559	Sisma Y SLD	0	11.5	0	0	2.8E2	0.244
5067	1560	Sisma X SLV	12.2	0	0	0	2.9E2	0.244	5068	1560	Sisma Y SLV	0	12.2	0	0	2.9E2	0.244
5069	1560	Sisma X SLD	12	0	0	0	2.9E2	0.244	5070	1560	Sisma Y SLD	0	12	0	0	2.9E2	0.244
5071	1561	Sisma X SLV	11.5	0	0	0	2.7E2	0.244	5072	1561	Sisma Y SLV	0	11.5	0	0	2.7E2	0.244
5073	1561	Sisma X SLD	11.3	0	0	0	2.7E2	0.244	5074	1561	Sisma Y SLD	0	11.3	0	0	2.7E2	0.244
5075	1562	Sisma X SLV	12.6	0	0	0	301.08	0.245	5076	1562	Sisma Y SLV	0	12.6	0	0	301.08	0.245
5077	1562	Sisma X SLD	12.4	0	0	0	301.08	0.245	5078	1562	Sisma Y SLD	0	12.4	0	0	301.08	0.245
5079	1563	Sisma X SLV	12	0	0	0	2.9E2	0.245	5080	1563	Sisma Y SLV	0	12	0	0	2.9E2	0.245
5081	1563	Sisma X SLD	11.8	0	0	0	2.9E2	0.245	5082	1563	Sisma Y SLD	0	11.8	0	0	2.9E2	0.245
5083	1564	Sisma X SLV	12.7	0	0	0	3.0E2	0.245	5084	1564	Sisma Y SLV	0	12.7	0	0	3.0E2	0.245
5085	1564	Sisma X SLD	12.5	0	0	0	3.0E2	0.245	5086	1564	Sisma Y SLD	0	12.5	0	0	3.0E2	0.245
5087	1565	Sisma X SLV	12.4	0	0	0	3.0E2	0.245	5088	1565	Sisma Y SLV	0	12.4	0	0	3.0E2	0.245
5089	1565	Sisma X SLD	12.2	0	0	0	3.0E2	0.245	5090	1565	Sisma Y SLD	0	12.2	0	0	3.0E2	0.245
5091	1566	Sisma X SLV	11.5	0	0	0	2.8E2	0.245	5092	1566	Sisma Y SLV	0	11.5	0	0	2.8E2	0.245
5093	1566	Sisma X SLD	11.3	0	0	0	2.8E2	0.245	5094	1566	Sisma Y SLD	0	11.3	0	0	2.8E2	0.245
5095	1567	Sisma X SLV	11.6	0	0	0	2.8E2	0.246	5096	1567	Sisma Y SLV	0	11.6	0	0	2.8E2	0.246
5097	1567	Sisma X SLD	11.4	0	0	0	2.8E2	0.246	5098	1567	Sisma Y SLD	0	11.4	0	0	2.8E2	0.246
5099	1568	Sisma X SLV	13.7	0	0	0	3.2E2	0.246	5100	1568	Sisma Y SLV	0	13.7	0	0	3.2E2	0.246
5101	1568	Sisma X SLD	13.4	0	0	0	3.2E2	0.246	5102	1568	Sisma Y SLD	0	13.4	0	0	3.2E2	0.246
5103	1569	Sisma X SLV	9.4	0	0	0	2.2E2	0.246	5104	1569	Sisma Y SLV	0	9.4	0	0	2.2E2	0.246
5105	1569	Sisma X SLD	9.2	0	0	0	2.2E2	0.246	5106	1569	Sisma Y SLD	0	9.2	0	0	2.2E2	0.246
5107	1570	Sisma X SLV	11.4	0	0	0	271.68	0.247	5108	1570	Sisma Y SLV	0	11.4	0	0	271.68	0.247
5109	1570	Sisma X SLD	11.2	0	0	0	271.68	0.247	5110	1570	Sisma Y SLD	0	11.2	0	0	271.68	0.247
5111	1571	Sisma X SLV	12	0	0	0	2.9E2	0.247	5112	1571	Sisma Y SLV	0	12	0	0	2.9E2	0.247
5113	1571	Sisma X SLD	11.8	0	0	0	2.9E2	0.247	5114	1571	Sisma Y SLD	0	11.8	0	0	2.9E2	0.247
5115	1572	Sisma X SLV	10.8	0	0	0	2.6E2	0.247	5116	1572	Sisma Y SLV	0	10.8	0	0	2.6E2	0.247
5117	1572	Sisma X SLD	10.6	0	0	0	2.6E2	0.247	5118	1572	Sisma Y SLD	0	10.6	0	0	2.6E2	0.247
5119	1573	Sisma X SLV	11.6	0	0	0	2.8E2	0.247	5120	1573	Sisma Y SLV	0	11.6	0	0	2.8E2	0.247
5121	1573	Sisma X SLD	11.5	0	0	0	2.8E2	0.247	5122	1573	Sisma Y SLD	0	11.5	0	0	2.8E2	0.247
5123	1574	Sisma X SLV	9.4	0	0	0	2.2E2	0.247	5124	1574	Sisma Y SLV	0	9.4	0	0	2.2E2	0.247
5125	1574	Sisma X SLD	9.3	0	0	0	2.2E2	0.247	5126	1574	Sisma Y SLD	0	9.3	0	0	2.2E2	0.247
5127	1575	Sisma X SLV	11.2	0	0	0	2.7E2	0.247	5128	1575	Sisma Y SLV	0	11.2	0	0	2.7E2	0.247
5129	1575	Sisma X SLD	11	0	0	0	2.7E2	0.247	5130	1575	Sisma Y SLD	0	11	0	0	2.7E2	0.247
5131	1576	Sisma X SLV	12	0	0	0	2.8E2	0.247	5132	1576	Sisma Y SLV	0	12	0	0	2.8E2	0.247
5133	1576	Sisma X SLD	11.8	0	0	0	2.8E2	0.247	5134	1576	Sisma Y SLD	0	11.8	0	0	2.8E2	0.247
5135	1577	Sisma X SLV	11.7	0	0	0	2.8E2	0.247	5136	1577	Sisma Y SLV	0	11.7	0	0	2.8E2	0.247
5137	1577	Sisma X SLD	11.5	0	0	0	2.8E2	0.247	5138	1577	Sisma Y SLD	0	11.5	0	0	2.8E2	0.247
5139	1578	Sisma X SLV	11.6	0	0	0	2.7E2	0.247	5140	1578	Sisma Y SLV	0	11.6	0	0	2.7E2	0.247
5141	1578	Sisma X SLD	11.4	0	0	0	2.7E2	0.247	5142	1578	Sisma Y SLD	0	11.4	0	0	2.7E2	0.247
5143	1579	Sisma X SLV	11.6	0	0	0	274.79	0.247	5144	1579	Sisma Y SLV	0	11.6	0	0	274.79	0.247
5145	1579	Sisma X SLD	11.4	0	0	0	274.79	0.247	5146	1579	Sisma Y SLD	0	11.4	0	0	274.79	0.247
5147	1580	Sisma X SLV	13.1	0	0	0	3.1E2	0.247	5148	1580	Sisma Y SLV	0	13.1	0	0	3.1E2	0.247
5149	1580	Sisma X SLD	12.9	0	0	0	3.1E2	0.247	5150	1580	Sisma Y SLD	0	12.9	0	0	3.1E2	0.247
5151	1581	Sisma X SLV	11.6	0	0	0	274.84	0.247	5152	1581	Sisma Y SLV	0	11.6	0	0	274.84	0.247
5153	1581	Sisma X SLD	11.4	0	0	0	274.84	0.247	5154	1581	Sisma Y SLD	0	11.4	0	0	274.84	0.247
5155	1582	Sisma X SLV	11.7	0	0	0	277.66	0.248	5156	1582	Sisma Y SLV	0	11.7	0	0	277.66	0.248
5157	1582	Sisma X SLD	11.6	0	0	0	277.66	0.248	5158	1582	Sisma Y SLD	0	11.6	0	0	277.66	0.248
5159	1583	Sisma X SLV	11.8	0	0	0	2.8E2	0.249	5160	1583	Sisma Y SLV	0	11.8	0	0	2.8E2	0.249
5161	1583	Sisma X SLD	11.6	0	0	0	2.8E2	0.249	5162	1583	Sisma Y SLD	0	11.6	0	0	2.8E2	0.249
5163	1584	Sisma X SLV	13	0	0	0	306.76	0.249	5164	1584	Sisma Y SLV	0	13	0	0	306.76	0.249
5165	1584	Sisma X SLD	12.8	0	0	0	306.76	0.249	5166	1584	Sisma Y SLD	0	12.8	0	0	306.76	0.249
5167	1585	Sisma X SLV	11.7	0	0	0	275.8	0.249	5168	1585	Sisma Y SLV	0	11.7	0	0	275.8	0.249
5169	1585	Sisma X SLD	11.5	0	0	0	275.8	0.249	5170	1585	Sisma Y SLD	0	11.5	0	0	275.8	0.249
5171	1586	Sisma X SLV	12.3	0	0	0	2.9E2	0.249	5172	1586	Sisma Y SLV	0	12.3	0	0	2.9E2	0.249
5173	1586	Sisma X SLD	12.1	0	0	0	2.9E2	0.249	5174	1586	Sisma Y SLD	0	12.1	0	0	2.9E2	0.249
5175	1587	Sisma X SLV	11.3	0	0	0	2.6E2	0.249	5176	1587	Sisma Y SLV	0	11.3	0	0	2.6E2	0.249
5177	1587	Sisma X SLD	11.1	0	0	0	2.6E2	0.249	5178	1587	Sisma Y SLD	0	11.1	0	0	2.6E2	0.249
5179	1588	Sisma X SLV	10.2	0	0	0	240.45	0.249	5180	1588	Sisma Y SLV	0	10.2	0	0	240.45	0.249
5181	1588	Sisma X SLD	10.1	0	0	0	240.45	0.249	5182	1588	Sisma Y SLD	0	10.1	0	0	240.45	0.249
5183	1589	Sisma X SLV	11.9	0	0	0	2.8E2	0.249	5184	1589	Sisma Y SLV	0	11.9	0	0	2.8E2	0.249
5185	1589	Sisma X SLD	11.7	0	0	0	2.8E2	0.249	5186	1589	Sisma Y SLD	0	11.7	0	0	2.8E2	0.249
5187	1590	Sisma X SLV	10.2	0	0	0	2.4E2	0.249	5188	1590	Sisma Y SLV	0	10.2	0	0	2.4E2	0.249
5189	1590	Sisma X SLD	10	0	0	0	2.4E2	0.249	5190	1590	Sisma Y SLD	0	10	0	0	2.4E2	0.249
5191	1591	Sisma X SLV	11.9	0	0	0	2.8E2	0.25	5192	1591	Sisma Y SLV	0	11.9	0	0	2.8E2	0.25
5193	1591	Sisma X SLD	11.7	0	0	0	2.8E2	0.25	5194	1591	Sisma Y SLD	0	11.7	0	0	2.8E2	0.25
5195	1592	Sisma X SLV	12.6	0	0	0	3.0E2	0.25	5196	1592	Sisma Y SLV	0	12.6	0	0	3.0E2	0.25
5197	1592	Sisma X SLD	12.4	0	0	0	3.0E2	0.25	5198	1592	Sisma Y SLD	0	12.4	0	0	3.0E2	0.25
5199	1593	Sisma X SLV	11.9	0	0	0	2.8E2	0.251	5200	1593	Sisma Y SLV	0	11.9	0	0	2.8E2	0.251
5201	1593	Sisma X SLD	11.7	0	0	0	2.8E2	0.251	5202	1593	Sisma Y SLD	0	11.7	0	0	2.8E2	0.251
5203	1594	Sisma X SLV	12.5	0	0	0	2.9E2	0.251	5204	1594	Sisma Y SLV	0	12.5	0	0	2.9E2	0.251
5205	1594	Sisma X SLD	12.3	0	0	0	2.9E2	0.251	5206	1594	Sisma Y SLD	0	12.3	0	0	2.9E2	0.251
5207	1595	Sisma X SLV	11.6	0	0	0	2.7E2	0.251	5208	1595	Sisma Y SLV	0	11.6	0	0	2.7E2	0.251
5209	1595	Sisma X SLD	11.4	0	0	0	2.7E2	0.251	5210	1595	Sisma Y SLD	0	11.4	0	0	2.7E2	0.251
5211	1596	Sisma X SLV	12	0	0	0	2.8E2	0.251	5212	1596	Sisma Y SLV	0	12	0	0	2.8E2	0.251
5213	1596	Sisma X SLD	11.8	0	0	0	2.8E2	0.251	5214	1596	Sisma Y SLD	0	11.8	0	0	2.8E2	0.251
5215	1597	Sisma X SLV	12.2	0	0	0	2.9E2	0.251	5216	1597	Sisma Y SLV	0	12.2	0	0	2.9E2	0.251
5217	1597	Sisma X SLD	12	0	0	0	2.9E2	0.251	5218	1597	Sisma Y SLD	0	12	0	0	2.9E2	0.251
5219	1598	Sisma X SLV	12	0	0	0	2.8E2	0.251	5220	1598	Sisma Y SLV	0	12	0	0	2.8E2	0.251
5221	1598	Sisma X SLD	11.8	0	0	0	2.8E2	0.251	5222	1598	Sisma Y SLD	0	11.8	0	0	2.8E2	0.251
5223	1599	Sisma X SLV	12.6	0	0	0	2.9E2	0.251	5224	1599	Sisma Y SLV	0	12.6	0	0	2.9E2	0.251
5225	1599	Sisma X SLD	12.4	0	0	0	2.9E2	0.251	5226	1599	Sisma Y SLD	0	12.4	0	0	2.9E2	0.251
5227	1600	Sisma X SLV	11.7	0	0	0	274.08	0.251	5228	1600	Sisma Y SLV	0	11.7	0	0	274.08	0.251
5229	1600	Sisma X SLD	11.6	0	0	0	274.08	0.251	5230	1600	Sisma Y SLD	0	11.6	0	0	274.08	0.251
5231	1601	Sisma X SLV	11.9	0	0	0	2.8E2	0.251	5232	1601	Sisma Y SLV	0	11.9	0	0	2.8E2	0.251

Indice	Nodo	Condizione	Fx	Fy	Fz	Mz	Peso	Gamma	Indice	Nodo	Condizione	Fx	Fy	Fz	Mz	Peso	Gamma
5233	1601	Sisma X SLD	11.7	0	0	0	2.8E2	0.251	5234	1601	Sisma Y SLD	0	11.7	0	0	2.8E2	0.251
5235	1602	Sisma X SLV	12.1	0	0	0	2.8E2	0.251	5236	1602	Sisma Y SLV	0	12.1	0	0	2.8E2	0.251
5237	1602	Sisma X SLD	11.9	0	0	0	2.8E2	0.251	5238	1602	Sisma Y SLD	0	11.9	0	0	2.8E2	0.251
5239	1603	Sisma X SLV	11.8	0	0	0	275.52	0.251	5240	1603	Sisma Y SLV	0	11.8	0	0	275.52	0.251
5241	1603	Sisma X SLD	11.6	0	0	0	275.52	0.251	5242	1603	Sisma Y SLD	0	11.6	0	0	275.52	0.251
5243	1604	Sisma X SLV	12.7	0	0	0	3.0E2	0.251	5244	1604	Sisma Y SLV	0	12.7	0	0	3.0E2	0.251
5245	1604	Sisma X SLD	12.5	0	0	0	3.0E2	0.251	5246	1604	Sisma Y SLD	0	12.5	0	0	3.0E2	0.251
5247	1605	Sisma X SLV	11.9	0	0	0	2.8E2	0.251	5248	1605	Sisma Y SLV	0	11.9	0	0	2.8E2	0.251
5249	1605	Sisma X SLD	11.7	0	0	0	2.8E2	0.251	5250	1605	Sisma Y SLD	0	11.7	0	0	2.8E2	0.251
5251	1606	Sisma X SLV	12.1	0	0	0	281.21	0.251	5252	1606	Sisma Y SLV	0	12.1	0	0	281.21	0.251
5253	1606	Sisma X SLD	11.9	0	0	0	281.21	0.251	5254	1606	Sisma Y SLD	0	11.9	0	0	281.21	0.251
5255	1607	Sisma X SLV	11.8	0	0	0	2.8E2	0.251	5256	1607	Sisma Y SLV	0	11.8	0	0	2.8E2	0.251
5257	1607	Sisma X SLD	11.7	0	0	0	2.8E2	0.251	5258	1607	Sisma Y SLD	0	11.7	0	0	2.8E2	0.251
5259	1608	Sisma X SLV	12.1	0	0	0	281.26	0.251	5260	1608	Sisma Y SLV	0	12.1	0	0	281.26	0.251
5261	1608	Sisma X SLD	11.9	0	0	0	281.26	0.251	5262	1608	Sisma Y SLD	0	11.9	0	0	281.26	0.251
5263	1609	Sisma X SLV	11.8	0	0	0	2.8E2	0.251	5264	1609	Sisma Y SLV	0	11.8	0	0	2.8E2	0.251
5265	1609	Sisma X SLD	11.7	0	0	0	2.8E2	0.251	5266	1609	Sisma Y SLD	0	11.7	0	0	2.8E2	0.251
5267	1610	Sisma X SLV	11.3	0	0	0	2.6E2	0.251	5268	1610	Sisma Y SLV	0	11.3	0	0	2.6E2	0.251
5269	1610	Sisma X SLD	11.1	0	0	0	2.6E2	0.251	5270	1610	Sisma Y SLD	0	11.1	0	0	2.6E2	0.251
5271	1611	Sisma X SLV	20.5	0	0	0	4.8E2	0.251	5272	1611	Sisma Y SLV	0	20.5	0	0	4.8E2	0.251
5273	1611	Sisma X SLD	20.2	0	0	0	4.8E2	0.251	5274	1611	Sisma Y SLD	0	20.2	0	0	4.8E2	0.251
5275	1612	Sisma X SLV	18.8	0	0	0	4.4E2	0.251	5276	1612	Sisma Y SLV	0	18.8	0	0	4.4E2	0.251
5277	1612	Sisma X SLD	18.5	0	0	0	4.4E2	0.251	5278	1612	Sisma Y SLD	0	18.5	0	0	4.4E2	0.251
5279	1613	Sisma X SLV	12.1	0	0	0	2.8E2	0.251	5280	1613	Sisma Y SLV	0	12.1	0	0	2.8E2	0.251
5281	1613	Sisma X SLD	11.9	0	0	0	2.8E2	0.251	5282	1613	Sisma Y SLD	0	11.9	0	0	2.8E2	0.251
5283	1614	Sisma X SLV	11.3	0	0	0	2.6E2	0.251	5284	1614	Sisma Y SLV	0	11.3	0	0	2.6E2	0.251
5285	1614	Sisma X SLD	11.1	0	0	0	2.6E2	0.251	5286	1614	Sisma Y SLD	0	11.1	0	0	2.6E2	0.251
5287	1615	Sisma X SLV	13.4	0	0	0	3.1E2	0.251	5288	1615	Sisma Y SLV	0	13.4	0	0	3.1E2	0.251
5289	1615	Sisma X SLD	13.2	0	0	0	3.1E2	0.251	5290	1615	Sisma Y SLD	0	13.2	0	0	3.1E2	0.251
5291	1616	Sisma X SLV	13.4	0	0	0	3.1E2	0.251	5292	1616	Sisma Y SLV	0	13.4	0	0	3.1E2	0.251
5293	1616	Sisma X SLD	13.2	0	0	0	3.1E2	0.251	5294	1616	Sisma Y SLD	0	13.2	0	0	3.1E2	0.251
5295	1617	Sisma X SLV	13.6	0	0	0	3.2E2	0.251	5296	1617	Sisma Y SLV	0	13.6	0	0	3.2E2	0.251
5297	1617	Sisma X SLD	13.4	0	0	0	3.2E2	0.251	5298	1617	Sisma Y SLD	0	13.4	0	0	3.2E2	0.251
5299	1618	Sisma X SLV	13.6	0	0	0	3.2E2	0.251	5300	1618	Sisma Y SLV	0	13.6	0	0	3.2E2	0.251
5301	1618	Sisma X SLD	13.4	0	0	0	3.2E2	0.251	5302	1618	Sisma Y SLD	0	13.4	0	0	3.2E2	0.251
5303	1619	Sisma X SLV	13.8	0	0	0	3.2E2	0.251	5304	1619	Sisma Y SLV	0	13.8	0	0	3.2E2	0.251
5305	1619	Sisma X SLD	13.6	0	0	0	3.2E2	0.251	5306	1619	Sisma Y SLD	0	13.6	0	0	3.2E2	0.251
5307	1620	Sisma X SLV	13.8	0	0	0	3.2E2	0.251	5308	1620	Sisma Y SLV	0	13.8	0	0	3.2E2	0.251
5309	1620	Sisma X SLD	13.6	0	0	0	3.2E2	0.251	5310	1620	Sisma Y SLD	0	13.6	0	0	3.2E2	0.251
5311	1621	Sisma X SLV	14	0	0	0	3.3E2	0.251	5312	1621	Sisma Y SLV	0	14	0	0	3.3E2	0.251
5313	1621	Sisma X SLD	13.8	0	0	0	3.3E2	0.251	5314	1621	Sisma Y SLD	0	13.8	0	0	3.3E2	0.251
5315	1622	Sisma X SLV	14	0	0	0	3.3E2	0.251	5316	1622	Sisma Y SLV	0	14	0	0	3.3E2	0.251
5317	1622	Sisma X SLD	13.8	0	0	0	3.3E2	0.251	5318	1622	Sisma Y SLD	0	13.8	0	0	3.3E2	0.251
5319	1623	Sisma X SLV	14.2	0	0	0	3.3E2	0.251	5320	1623	Sisma Y SLV	0	14.2	0	0	3.3E2	0.251
5321	1623	Sisma X SLD	14	0	0	0	3.3E2	0.251	5322	1623	Sisma Y SLD	0	14	0	0	3.3E2	0.251
5323	1624	Sisma X SLV	14.2	0	0	0	3.3E2	0.251	5324	1624	Sisma Y SLV	0	14.2	0	0	3.3E2	0.251
5325	1624	Sisma X SLD	14	0	0	0	3.3E2	0.251	5326	1624	Sisma Y SLD	0	14	0	0	3.3E2	0.251
5327	1625	Sisma X SLV	14.3	0	0	0	3.3E2	0.251	5328	1625	Sisma Y SLV	0	14.3	0	0	3.3E2	0.251
5329	1625	Sisma X SLD	14.1	0	0	0	3.3E2	0.251	5330	1625	Sisma Y SLD	0	14.1	0	0	3.3E2	0.251
5331	1626	Sisma X SLV	14.3	0	0	0	3.3E2	0.251	5332	1626	Sisma Y SLV	0	14.3	0	0	3.3E2	0.251
5333	1626	Sisma X SLD	14.1	0	0	0	3.3E2	0.251	5334	1626	Sisma Y SLD	0	14.1	0	0	3.3E2	0.251
5335	1627	Sisma X SLV	14.4	0	0	0	3.4E2	0.251	5336	1627	Sisma Y SLV	0	14.4	0	0	3.4E2	0.251
5337	1627	Sisma X SLD	14.2	0	0	0	3.4E2	0.251	5338	1627	Sisma Y SLD	0	14.2	0	0	3.4E2	0.251
5339	1628	Sisma X SLV	14.4	0	0	0	3.4E2	0.251	5340	1628	Sisma Y SLV	0	14.4	0	0	3.4E2	0.251
5341	1628	Sisma X SLD	14.2	0	0	0	3.4E2	0.251	5342	1628	Sisma Y SLD	0	14.2	0	0	3.4E2	0.251
5343	1629	Sisma X SLV	14.5	0	0	0	3.4E2	0.251	5344	1629	Sisma Y SLV	0	14.5	0	0	3.4E2	0.251
5345	1629	Sisma X SLD	14.3	0	0	0	3.4E2	0.251	5346	1629	Sisma Y SLD	0	14.3	0	0	3.4E2	0.251
5347	1630	Sisma X SLV	14.5	0	0	0	3.4E2	0.251	5348	1630	Sisma Y SLV	0	14.5	0	0	3.4E2	0.251
5349	1630	Sisma X SLD	14.3	0	0	0	3.4E2	0.251	5350	1630	Sisma Y SLD	0	14.3	0	0	3.4E2	0.251
5351	1631	Sisma X SLV	14.5	0	0	0	3.4E2	0.251	5352	1631	Sisma Y SLV	0	14.5	0	0	3.4E2	0.251
5353	1631	Sisma X SLD	14.3	0	0	0	3.4E2	0.251	5354	1631	Sisma Y SLD	0	14.3	0	0	3.4E2	0.251
5355	1632	Sisma X SLV	14.5	0	0	0	3.4E2	0.251	5356	1632	Sisma Y SLV	0	14.5	0	0	3.4E2	0.251
5357	1632	Sisma X SLD	14.3	0	0	0	3.4E2	0.251	5358	1632	Sisma Y SLD	0	14.3	0	0	3.4E2	0.251
5359	1633	Sisma X SLV	14.5	0	0	0	3.4E2	0.251	5360	1633	Sisma Y SLV	0	14.5	0	0	3.4E2	0.251
5361	1633	Sisma X SLD	14.3	0	0	0	3.4E2	0.251	5362	1633	Sisma Y SLD	0	14.3	0	0	3.4E2	0.251
5363	1634	Sisma X SLV	14.5	0	0	0	3.4E2	0.251	5364	1634	Sisma Y SLV	0	14.5	0	0	3.4E2	0.251
5365	1634	Sisma X SLD	14.3	0	0	0	3.4E2	0.251	5366	1634	Sisma Y SLD	0	14.3	0	0	3.4E2	0.251
5367	1635	Sisma X SLV	14.5	0	0	0	3.4E2	0.251	5368	1635	Sisma Y SLV	0	14.5	0	0	3.4E2	0.251
5369	1635	Sisma X SLD	14.3	0	0	0	3.4E2	0.251	5370	1635	Sisma Y SLD	0	14.3	0	0	3.4E2	0.251
5371	1636	Sisma X SLV	14.5	0	0	0	3.4E2	0.251	5372	1636	Sisma Y SLV	0	14.5	0	0	3.4E2	0.251
5373	1636	Sisma X SLD	14.3	0	0	0	3.4E2	0.251	5374	1636	Sisma Y SLD	0	14.3	0	0	3.4E2	0.251
5375	1637	Sisma X SLV	21.9	0	0	0	5.1E2	0.251	5376	1637	Sisma Y SLV	0	21.9	0	0	5.1E2	0.251
5377	1637	Sisma X SLD	21.5	0	0	0	5.1E2	0.251	5378	1637	Sisma Y SLD	0	21.5	0	0	5.1E2	0.251
5379	1638	Sisma X SLV	20.7	0	0	0	4.8E2	0.251	5380	1638	Sisma Y SLV	0	20.7	0	0	4.8E2	0.251
5381	1638	Sisma X SLD	20.4	0	0	0	4.8E2	0.251	5382	1638	Sisma Y SLD	0	20.4	0	0	4.8E2	0.251
5383	1639	Sisma X SLV	14	0	0	0	3.3E2	0.251	5384	1639	Sisma Y SLV	0	14	0	0	3.3E2	0.251
5385	1639	Sisma X SLD	13.7	0	0	0	3.3E2	0.251	5386	1639	Sisma Y SLD	0	13.7	0	0	3.3E2	0.251
5387	1640	Sisma X SLV	13.9	0	0	0	3.3E2	0.251	5388	1640	Sisma Y SLV	0	13.9	0	0	3.3E2	0.251
5389	1640	Sisma X SLD	13.7	0	0	0	3.3E2	0.251	5390	1640	Sisma Y SLD	0	13.7	0	0	3.3E2	0.251
5391	1641	Sisma X SLV	13.9	0	0	0	3.3E2	0.251	5392	1641	Sisma Y SLV	0	13.9	0	0	3.3E2	0.251
5393	1641	Sisma X SLD	13.7	0	0	0	3.3E2	0.251	5394	1641	Sisma Y SLD	0	13.7	0	0	3.3E2	0.251
5395	1642	Sisma X SLV	13.9	0	0	0	3.2E2	0.251	5396	1642	Sisma Y SLV	0	13.9	0	0	3.2E2	0.251
5397	1642	Sisma X SLD	13.7	0	0	0	3.2E2	0.251	5398	1642	Sisma Y SLD	0	13.7	0	0	3.2E2	0.251
5399	1643	Sisma X SLV	13.9	0	0	0	3.2E2	0.251	5400	1643	Sisma Y SLV	0	13.9	0	0	3.2E2	0.251
5401	1643	Sisma X SLD	13.7	0	0	0	3.2E2	0.251	5402	1643	Sisma Y SLD	0	13.7	0	0	3.2E2	0.251
5403	1644	Sisma X SLV	13.9	0	0	0	3.2E2	0.251	5404	1644	Sisma Y SLV	0	13.9	0	0	3.2E2	0.251
5405	1644	Sisma X SLD	13.7	0	0	0	3.2E2	0.251	5406	1644	Sisma Y SLD	0	13.7	0	0	3.2E2	0.251
5407	1645	Sisma X SLV	13.9	0	0	0	323.51	0.251	5408	1645	Sisma Y SLV	0	13.9	0	0	323.51	0.251
5409	1645	Sisma X SLD	13.7	0	0	0	323.51	0.251	5410	1645	Sisma Y SLD	0	13.7	0	0	323.51	0.251
5411	1646	Sisma X SLV	13.9	0	0	0	3.2E2	0.251	5412	1646	Sisma Y SLV	0	13.9	0	0	3.2E2	0.251
5413	1646	Sisma X SLD	13.6	0	0	0	3.2E2	0.251	5414	1646	Sisma Y SLD	0	13.6	0	0	3.2E2	0.251
5415	1647	Sisma X SLV	13.9	0	0	0	3.2E2	0.251	5416	1647	Sisma Y SLV	0	13.9	0	0	3.2E2	0.251
5417	1647	Sisma X SLD	13.6	0	0	0	3.2E2	0.251	5418	1647	Sisma Y SLD	0	13.6	0	0	3.2E2	0.251
5419	1648	Sisma X SLV	13.9	0	0	0	3.2E2	0.251	5420	1648	Sisma Y SLV	0	13.9	0	0	3.2E2	0.251
5421	1648	Sisma X SLD	13.7	0	0	0	3.2E2	0.251	5422	1648	Sisma Y SLD	0	13.7	0	0	3.2E2	0.251
5423	1649	Sisma X SLV	13.9	0	0	0	3.2E2	0.251	5424	1649	Sisma Y SLV	0	13.9	0	0	3.2E2	0.251
5425	1649	Sisma X SLD	13.7	0	0	0	3.2E2	0.251	5426	1649	Sisma Y SLD	0	13.7	0	0	3.2E2	0.251
5427	1650	Sisma X SLV	14.9	0	0	0	3.5E2	0.251	5428	1650	Sisma Y SLV	0	14.9	0	0	3.5E2	0.251
5429	1650	Sisma X SLD	14.6	0	0	0	3.5E2	0.251	5430	1650	Sisma Y SLD	0	14.6	0	0	3.5E2	0.251
5431	1651	Sisma X SLV	18	0	0	0	4.2E2	0.251	5432	1651	Sisma Y SLV	0	18	0	0	4.2E2	0.251
5433	1651	Sisma X SLD	17.7	0	0	0	4.2E2	0.251	5434	1651	Sisma Y SLD	0	17.7	0	0	4.2E2	0.251

Indice	Nodo	Condizione	Fx	Fy	Fz	Mz	Peso	Gamma	Indice	Nodo	Condizione	Fx	Fy	Fz	Mz	Peso	Gamma
5435	1652	Sisma X SLV	19	0	0	0	4.4E2	0.251	5436	1652	Sisma Y SLV	0	19	0	0	4.4E2	0.251
5437	1652	Sisma X SLD	18.7	0	0	0	4.4E2	0.251	5438	1652	Sisma Y SLD	0	18.7	0	0	4.4E2	0.251
5439	1653	Sisma X SLV	15.2	0	0	0	3.5E2	0.251	5440	1653	Sisma Y SLV	0	15.2	0	0	3.5E2	0.251
5441	1653	Sisma X SLD	15	0	0	0	3.5E2	0.251	5442	1653	Sisma Y SLD	0	15	0	0	3.5E2	0.251
5443	1654	Sisma X SLV	15.2	0	0	0	3.5E2	0.251	5444	1654	Sisma Y SLV	0	15.2	0	0	3.5E2	0.251
5445	1654	Sisma X SLD	15	0	0	0	3.5E2	0.251	5446	1654	Sisma Y SLD	0	15	0	0	3.5E2	0.251
5447	1655	Sisma X SLV	15.2	0	0	0	3.5E2	0.251	5448	1655	Sisma Y SLV	0	15.2	0	0	3.5E2	0.251
5449	1655	Sisma X SLD	14.9	0	0	0	3.5E2	0.251	5450	1655	Sisma Y SLD	0	14.9	0	0	3.5E2	0.251
5451	1656	Sisma X SLV	15.1	0	0	0	3.5E2	0.251	5452	1656	Sisma Y SLV	0	15.1	0	0	3.5E2	0.251
5453	1656	Sisma X SLD	14.9	0	0	0	3.5E2	0.251	5454	1656	Sisma Y SLD	0	14.9	0	0	3.5E2	0.251
5455	1657	Sisma X SLV	15	0	0	0	3.5E2	0.251	5456	1657	Sisma Y SLV	0	15	0	0	3.5E2	0.251
5457	1657	Sisma X SLD	14.8	0	0	0	3.5E2	0.251	5458	1657	Sisma Y SLD	0	14.8	0	0	3.5E2	0.251
5459	1658	Sisma X SLV	14.9	0	0	0	3.5E2	0.251	5460	1658	Sisma Y SLV	0	14.9	0	0	3.5E2	0.251
5461	1658	Sisma X SLD	14.7	0	0	0	3.5E2	0.251	5462	1658	Sisma Y SLD	0	14.7	0	0	3.5E2	0.251
5463	1659	Sisma X SLV	14.8	0	0	0	3.4E2	0.251	5464	1659	Sisma Y SLV	0	14.8	0	0	3.4E2	0.251
5465	1659	Sisma X SLD	14.6	0	0	0	3.4E2	0.251	5466	1659	Sisma Y SLD	0	14.6	0	0	3.4E2	0.251
5467	1660	Sisma X SLV	14.7	0	0	0	3.4E2	0.251	5468	1660	Sisma Y SLV	0	14.7	0	0	3.4E2	0.251
5469	1660	Sisma X SLD	14.5	0	0	0	3.4E2	0.251	5470	1660	Sisma Y SLD	0	14.5	0	0	3.4E2	0.251
5471	1661	Sisma X SLV	14.6	0	0	0	3.4E2	0.251	5472	1661	Sisma Y SLV	0	14.6	0	0	3.4E2	0.251
5473	1661	Sisma X SLD	14.4	0	0	0	3.4E2	0.251	5474	1661	Sisma Y SLD	0	14.4	0	0	3.4E2	0.251
5475	1662	Sisma X SLV	14.6	0	0	0	3.4E2	0.251	5476	1662	Sisma Y SLV	0	14.6	0	0	3.4E2	0.251
5477	1662	Sisma X SLD	14.4	0	0	0	3.4E2	0.251	5478	1662	Sisma Y SLD	0	14.4	0	0	3.4E2	0.251
5479	1663	Sisma X SLV	12.6	0	0	0	2.9E2	0.251	5480	1663	Sisma Y SLV	0	12.6	0	0	2.9E2	0.251
5481	1663	Sisma X SLD	12.4	0	0	0	2.9E2	0.251	5482	1663	Sisma Y SLD	0	12.4	0	0	2.9E2	0.251
5483	1664	Sisma X SLV	11.8	0	0	0	276.13	0.251	5484	1664	Sisma Y SLV	0	11.8	0	0	276.13	0.251
5485	1664	Sisma X SLD	11.7	0	0	0	276.13	0.251	5486	1664	Sisma Y SLD	0	11.7	0	0	276.13	0.251
5487	1665	Sisma X SLV	20	0	0	0	4.7E2	0.251	5488	1665	Sisma Y SLV	0	20	0	0	4.7E2	0.251
5489	1665	Sisma X SLD	19.7	0	0	0	4.7E2	0.251	5490	1665	Sisma Y SLD	0	19.7	0	0	4.7E2	0.251
5491	1666	Sisma X SLV	20.1	0	0	0	4.7E2	0.251	5492	1666	Sisma Y SLV	0	20.1	0	0	4.7E2	0.251
5493	1666	Sisma X SLD	19.8	0	0	0	4.7E2	0.251	5494	1666	Sisma Y SLD	0	19.8	0	0	4.7E2	0.251
5495	1667	Sisma X SLV	12	0	0	0	2.8E2	0.251	5496	1667	Sisma Y SLV	0	12	0	0	2.8E2	0.251
5497	1667	Sisma X SLD	11.8	0	0	0	2.8E2	0.251	5498	1667	Sisma Y SLD	0	11.8	0	0	2.8E2	0.251
5499	1668	Sisma X SLV	12.2	0	0	0	2.8E2	0.252	5500	1668	Sisma Y SLV	0	12.2	0	0	2.8E2	0.252
5501	1668	Sisma X SLD	12	0	0	0	2.8E2	0.252	5502	1668	Sisma Y SLD	0	12	0	0	2.8E2	0.252
5503	1669	Sisma X SLV	6.4	0	0	0	1.5E2	0.254	5504	1669	Sisma Y SLV	0	6.4	0	0	1.5E2	0.254
5505	1669	Sisma X SLD	6.3	0	0	0	1.5E2	0.254	5506	1669	Sisma Y SLD	0	6.3	0	0	1.5E2	0.254
5507	1670	Sisma X SLV	6.4	0	0	0	1.5E2	0.254	5508	1670	Sisma Y SLV	0	6.4	0	0	1.5E2	0.254
5509	1670	Sisma X SLD	6.3	0	0	0	1.5E2	0.254	5510	1670	Sisma Y SLD	0	6.3	0	0	1.5E2	0.254
5511	1671	Sisma X SLV	12.2	0	0	0	2.8E2	0.254	5512	1671	Sisma Y SLV	0	12.2	0	0	2.8E2	0.254
5513	1671	Sisma X SLD	12	0	0	0	2.8E2	0.254	5514	1671	Sisma Y SLD	0	12	0	0	2.8E2	0.254
5515	1672	Sisma X SLV	3.9	0	0	0	90.951	0.254	5516	1672	Sisma Y SLV	0	3.9	0	0	90.951	0.254
5517	1672	Sisma X SLD	3.9	0	0	0	90.951	0.254	5518	1672	Sisma Y SLD	0	3.9	0	0	90.951	0.254
5519	1673	Sisma X SLV	7	0	0	0	1.6E2	0.254	5520	1673	Sisma Y SLV	0	7	0	0	1.6E2	0.254
5521	1673	Sisma X SLD	6.9	0	0	0	1.6E2	0.254	5522	1673	Sisma Y SLD	0	6.9	0	0	1.6E2	0.254
5523	1674	Sisma X SLV	6.6	0	0	0	1.5E2	0.255	5524	1674	Sisma Y SLV	0	6.6	0	0	1.5E2	0.255
5525	1674	Sisma X SLD	6.5	0	0	0	1.5E2	0.255	5526	1674	Sisma Y SLD	0	6.5	0	0	1.5E2	0.255
5527	1675	Sisma X SLV	14	0	0	0	3.2E2	0.255	5528	1675	Sisma Y SLV	0	14	0	0	3.2E2	0.255
5529	1675	Sisma X SLD	13.8	0	0	0	3.2E2	0.255	5530	1675	Sisma Y SLD	0	13.8	0	0	3.2E2	0.255
5531	1676	Sisma X SLV	13	0	0	0	3.0E2	0.255	5532	1676	Sisma Y SLV	0	13	0	0	3.0E2	0.255
5533	1676	Sisma X SLD	12.7	0	0	0	3.0E2	0.255	5534	1676	Sisma Y SLD	0	12.7	0	0	3.0E2	0.255
5535	1677	Sisma X SLV	4.7	0	0	0	1.1E2	0.256	5536	1677	Sisma Y SLV	0	4.7	0	0	1.1E2	0.256
5537	1677	Sisma X SLD	4.7	0	0	0	1.1E2	0.256	5538	1677	Sisma Y SLD	0	4.7	0	0	1.1E2	0.256
5539	1678	Sisma X SLV	15.7	0	0	0	3.6E2	0.256	5540	1678	Sisma Y SLV	0	15.7	0	0	3.6E2	0.256
5541	1678	Sisma X SLD	15.5	0	0	0	3.6E2	0.256	5542	1678	Sisma Y SLD	0	15.5	0	0	3.6E2	0.256
5543	1679	Sisma X SLV	6.5	0	0	0	1.5E2	0.256	5544	1679	Sisma Y SLV	0	6.5	0	0	1.5E2	0.256
5545	1679	Sisma X SLD	6.4	0	0	0	1.5E2	0.256	5546	1679	Sisma Y SLD	0	6.4	0	0	1.5E2	0.256
5547	1680	Sisma X SLV	6.5	0	0	0	1.5E2	0.256	5548	1680	Sisma Y SLV	0	6.5	0	0	1.5E2	0.256
5549	1680	Sisma X SLD	6.4	0	0	0	1.5E2	0.256	5550	1680	Sisma Y SLD	0	6.4	0	0	1.5E2	0.256
5551	1681	Sisma X SLV	12.3	0	0	0	2.8E2	0.256	5552	1681	Sisma Y SLV	0	12.3	0	0	2.8E2	0.256
5553	1681	Sisma X SLD	12.1	0	0	0	2.8E2	0.256	5554	1681	Sisma Y SLD	0	12.1	0	0	2.8E2	0.256
5555	1682	Sisma X SLV	7.1	0	0	0	1.6E2	0.257	5556	1682	Sisma Y SLV	0	7.1	0	0	1.6E2	0.257
5557	1682	Sisma X SLD	7	0	0	0	1.6E2	0.257	5558	1682	Sisma Y SLD	0	7	0	0	1.6E2	0.257
5559	1683	Sisma X SLV	14	0	0	0	3.2E2	0.257	5560	1683	Sisma Y SLV	0	14	0	0	3.2E2	0.257
5561	1683	Sisma X SLD	13.7	0	0	0	3.2E2	0.257	5562	1683	Sisma Y SLD	0	13.7	0	0	3.2E2	0.257
5563	1684	Sisma X SLV	7.4	0	0	0	1.7E2	0.257	5564	1684	Sisma Y SLV	0	7.4	0	0	1.7E2	0.257
5565	1684	Sisma X SLD	7.3	0	0	0	1.7E2	0.257	5566	1684	Sisma Y SLD	0	7.3	0	0	1.7E2	0.257
5567	1685	Sisma X SLV	6.6	0	0	0	1.5E2	0.259	5568	1685	Sisma Y SLV	0	6.6	0	0	1.5E2	0.259
5569	1685	Sisma X SLD	6.5	0	0	0	1.5E2	0.259	5570	1685	Sisma Y SLD	0	6.5	0	0	1.5E2	0.259
5571	1686	Sisma X SLV	6.6	0	0	0	1.5E2	0.259	5572	1686	Sisma Y SLV	0	6.6	0	0	1.5E2	0.259
5573	1686	Sisma X SLD	6.5	0	0	0	1.5E2	0.259	5574	1686	Sisma Y SLD	0	6.5	0	0	1.5E2	0.259
5575	1687	Sisma X SLV	6.8	0	0	0	1.5E2	0.259	5576	1687	Sisma Y SLV	0	6.8	0	0	1.5E2	0.259
5577	1687	Sisma X SLD	6.7	0	0	0	1.5E2	0.259	5578	1687	Sisma Y SLD	0	6.7	0	0	1.5E2	0.259
5579	1688	Sisma X SLV	14.3	0	0	0	3.2E2	0.259	5580	1688	Sisma Y SLV	0	14.3	0	0	3.2E2	0.259
5581	1688	Sisma X SLD	14	0	0	0	3.2E2	0.259	5582	1688	Sisma Y SLD	0	14	0	0	3.2E2	0.259
5583	1689	Sisma X SLV	13.1	0	0	0	3.0E2	0.259	5584	1689	Sisma Y SLV	0	13.1	0	0	3.0E2	0.259
5585	1689	Sisma X SLD	12.9	0	0	0	3.0E2	0.259	5586	1689	Sisma Y SLD	0	12.9	0	0	3.0E2	0.259
5587	1690	Sisma X SLV	12.5	0	0	0	2.8E2	0.259	5588	1690	Sisma Y SLV	0	12.5	0	0	2.8E2	0.259
5589	1690	Sisma X SLD	12.3	0	0	0	2.8E2	0.259	5590	1690	Sisma Y SLD	0	12.3	0	0	2.8E2	0.259
5591	1691	Sisma X SLV	12.9	0	0	0	2.9E2	0.26	5592	1691	Sisma Y SLV	0	12.9	0	0	2.9E2	0.26
5593	1691	Sisma X SLD	12.7	0	0	0	2.9E2	0.26	5594	1691	Sisma Y SLD	0	12.7	0	0	2.9E2	0.26
5595	1692	Sisma X SLV	7.2	0	0	0	1.6E2	0.261	5596	1692	Sisma Y SLV	0	7.2	0	0	1.6E2	0.261
5597	1692	Sisma X SLD	7.1	0	0	0	1.6E2	0.261	5598	1692	Sisma Y SLD	0	7.1	0	0	1.6E2	0.261
5599	1693	Sisma X SLV	16.2	0	0	0	3.6E2	0.261	5600	1693	Sisma Y SLV	0	16.2	0	0	3.6E2	0.261
5601	1693	Sisma X SLD	15.9	0	0	0	3.6E2	0.261	5602	1693	Sisma Y SLD	0	15.9	0	0	3.6E2	0.261
5603	1694	Sisma X SLV	5.2	0	0	0	1.2E2	0.261	5604	1694	Sisma Y SLV	0	5.2	0	0	1.2E2	0.261
5605	1694	Sisma X SLD	5.1	0	0	0	1.2E2	0.261	5606	1694	Sisma Y SLD	0	5.1	0	0	1.2E2	0.261
5607	1695	Sisma X SLV	6.7	0	0	0	1.5E2	0.261	5608	1695	Sisma Y SLV	0	6.7	0	0	1.5E2	0.261
5609	1695	Sisma X SLD	6.6	0	0	0	1.5E2	0.261	5610	1695	Sisma Y SLD	0	6.6	0	0	1.5E2	0.261
5611	1696	Sisma X SLV	6.7	0	0	0	1.5E2	0.261	5612	1696	Sisma Y SLV	0	6.7	0	0	1.5E2	0.261
5613	1696	Sisma X SLD	6.6	0	0	0	1.5E2	0.261	5614	1696	Sisma Y SLD	0	6.6	0	0	1.5E2	0.261
5615	1697	Sisma X SLV	12.6	0	0	0	2.8E2	0.262	5616	1697	Sisma Y SLV	0	12.6	0	0	2.8E2	0.262
5617	1697	Sisma X SLD	12.4	0	0	0	2.8E2	0.262	5618	1697	Sisma Y SLD	0	12.4	0	0	2.8E2	0.262
5619	1698	Sisma X SLV	6.9	0	0	0	1.5E2	0.263	5620	1698	Sisma Y SLV	0	6.9	0	0	1.5E2	0.263
5621	1698	Sisma X SLD	6.8	0	0	0	1.5E2	0.263	5622	1698	Sisma Y SLD	0	6.8	0	0	1.5E2	0.263
5623	1699	Sisma X SLV	14.6	0	0	0	3.2E2	0.263	5624	1699	Sisma Y SLV	0	14.6	0	0	3.2E2	0.263
5625	1699	Sisma X SLD	14.3	0	0	0	3.2E2	0.263	5626	1699	Sisma Y SLD	0	14.3	0	0	3.2E2	0.263
5627	1700	Sisma X SLV	13.2	0	0	0	2.9E2	0.263	5628	1700	Sisma Y SLV	0	13.2	0	0	2.9E2	0.263
5629	1700	Sisma X SLD	13	0	0	0	2.9E2	0.263	5630	1700	Sisma Y SLD	0	13	0	0	2.9E2	0.263
5631	1701	Sisma X SLV	5.7	0	0	0	1.3E2	0.264	5632	1701	Sisma Y SLV	0	5.7	0	0	1.3E2	0.264
5633	1701	Sisma X SLD	5.6	0	0	0	1.3E2	0.264	5634	1701	Sisma Y SLD	0	5.6	0	0	1.3E2	0.264
5635	1702	Sisma X SLV	14.5	0	0	0	3.2E2	0.264	5636	1702	Sisma Y SLV	0	14.5	0	0	3.2E2	0.264
5637	1702	Sisma X SLD	14.3	0	0	0	3.2E2	0.264	5638	1702	Sisma Y SLD	0	14.3	0	0	3.2E2	0.264
5639	1703	Sisma X SLV	7.7	0	0	0	1.7E2	0.264	5640	1703	Sisma Y SLV	0	7.7	0	0	1.7E2	0.264
5641	1703	Sisma X SLD	7.6	0	0	0	1.7E2	0.264	5642	1703	Sisma Y SLD	0	7.6	0	0	1.7E2	0.264

Indice	Nodo	Condizione	Fx	Fy	Fz	Mz	Peso	Gamma	Indice	Nodo	Condizione	Fx	Fy	Fz	Mz	Peso	Gamma
5643	1704	Sisma X SLV	7.4	0	0	0	163.93	0.264	5644	1704	Sisma Y SLV	0	7.4	0	0	163.93	0.264
5645	1704	Sisma X SLD	7.3	0	0	0	163.93	0.264	5646	1704	Sisma Y SLD	0	7.3	0	0	163.93	0.264
5647	1705	Sisma X SLV	6.8	0	0	0	1.5E2	0.265	5648	1705	Sisma Y SLV	0	6.8	0	0	1.5E2	0.265
5649	1705	Sisma X SLD	6.7	0	0	0	1.5E2	0.265	5650	1705	Sisma Y SLD	0	6.7	0	0	1.5E2	0.265
5651	1706	Sisma X SLV	6.8	0	0	0	1.5E2	0.265	5652	1706	Sisma Y SLV	0	6.8	0	0	1.5E2	0.265
5653	1706	Sisma X SLD	6.7	0	0	0	1.5E2	0.265	5654	1706	Sisma Y SLD	0	6.7	0	0	1.5E2	0.265
5655	1707	Sisma X SLV	12.9	0	0	0	2.8E2	0.265	5656	1707	Sisma Y SLV	0	12.9	0	0	2.8E2	0.265
5657	1707	Sisma X SLD	12.7	0	0	0	2.8E2	0.265	5658	1707	Sisma Y SLD	0	12.7	0	0	2.8E2	0.265
5659	1708	Sisma X SLV	4.3	0	0	0	94.174	0.266	5660	1708	Sisma Y SLV	0	4.3	0	0	94.174	0.266
5661	1708	Sisma X SLD	4.2	0	0	0	94.174	0.266	5662	1708	Sisma Y SLD	0	4.2	0	0	94.174	0.266
5663	1709	Sisma X SLV	16.9	0	0	0	3.7E2	0.266	5664	1709	Sisma Y SLV	0	16.9	0	0	3.7E2	0.266
5665	1709	Sisma X SLD	16.6	0	0	0	3.7E2	0.266	5666	1709	Sisma Y SLD	0	16.6	0	0	3.7E2	0.266
5667	1710	Sisma X SLV	5.7	0	0	0	1.2E2	0.266	5668	1710	Sisma Y SLV	0	5.7	0	0	1.2E2	0.266
5669	1710	Sisma X SLD	5.6	0	0	0	1.2E2	0.266	5670	1710	Sisma Y SLD	0	5.6	0	0	1.2E2	0.266
5671	1711	Sisma X SLV	6.9	0	0	0	1.5E2	0.266	5672	1711	Sisma Y SLV	0	6.9	0	0	1.5E2	0.266
5673	1711	Sisma X SLD	6.8	0	0	0	1.5E2	0.266	5674	1711	Sisma Y SLD	0	6.8	0	0	1.5E2	0.266
5675	1712	Sisma X SLV	6.9	0	0	0	1.5E2	0.266	5676	1712	Sisma Y SLV	0	6.9	0	0	1.5E2	0.266
5677	1712	Sisma X SLD	6.8	0	0	0	1.5E2	0.266	5678	1712	Sisma Y SLD	0	6.8	0	0	1.5E2	0.266
5679	1713	Sisma X SLV	7.1	0	0	0	1.6E2	0.268	5680	1713	Sisma Y SLV	0	7.1	0	0	1.6E2	0.268
5681	1713	Sisma X SLD	7	0	0	0	1.6E2	0.268	5682	1713	Sisma Y SLD	0	7	0	0	1.6E2	0.268
5683	1714	Sisma X SLV	15	0	0	0	3.3E2	0.268	5684	1714	Sisma Y SLV	0	15	0	0	3.3E2	0.268
5685	1714	Sisma X SLD	14.7	0	0	0	3.3E2	0.268	5686	1714	Sisma Y SLD	0	14.7	0	0	3.3E2	0.268
5687	1715	Sisma X SLV	13.4	0	0	0	2.9E2	0.268	5688	1715	Sisma Y SLV	0	13.4	0	0	2.9E2	0.268
5689	1715	Sisma X SLD	13.2	0	0	0	2.9E2	0.268	5690	1715	Sisma Y SLD	0	13.2	0	0	2.9E2	0.268
5691	1716	Sisma X SLV	7.6	0	0	0	1.7E2	0.269	5692	1716	Sisma Y SLV	0	7.6	0	0	1.7E2	0.269
5693	1716	Sisma X SLD	7.5	0	0	0	1.7E2	0.269	5694	1716	Sisma Y SLD	0	7.5	0	0	1.7E2	0.269
5695	1717	Sisma X SLV	7	0	0	0	1.5E2	0.269	5696	1717	Sisma Y SLV	0	7	0	0	1.5E2	0.269
5697	1717	Sisma X SLD	6.8	0	0	0	1.5E2	0.269	5698	1717	Sisma Y SLD	0	6.8	0	0	1.5E2	0.269
5699	1718	Sisma X SLV	7	0	0	0	1.5E2	0.269	5700	1718	Sisma Y SLV	0	7	0	0	1.5E2	0.269
5701	1718	Sisma X SLD	6.8	0	0	0	1.5E2	0.269	5702	1718	Sisma Y SLD	0	6.8	0	0	1.5E2	0.269
5703	1719	Sisma X SLV	13.6	0	0	0	3.0E2	0.269	5704	1719	Sisma Y SLV	0	13.6	0	0	3.0E2	0.269
5705	1719	Sisma X SLD	13.4	0	0	0	3.0E2	0.269	5706	1719	Sisma Y SLD	0	13.4	0	0	3.0E2	0.269
5707	1720	Sisma X SLV	13.2	0	0	0	2.9E2	0.27	5708	1720	Sisma Y SLV	0	13.2	0	0	2.9E2	0.27
5709	1720	Sisma X SLD	13	0	0	0	2.9E2	0.27	5710	1720	Sisma Y SLD	0	13	0	0	2.9E2	0.27
5711	1721	Sisma X SLV	17.6	0	0	0	3.8E2	0.271	5712	1721	Sisma Y SLV	0	17.6	0	0	3.8E2	0.271
5713	1721	Sisma X SLD	17.3	0	0	0	3.8E2	0.271	5714	1721	Sisma Y SLD	0	17.3	0	0	3.8E2	0.271
5715	1722	Sisma X SLV	19.5	0	0	0	4.2E2	0.271	5716	1722	Sisma Y SLV	0	19.5	0	0	4.2E2	0.271
5717	1722	Sisma X SLD	19.2	0	0	0	4.2E2	0.271	5718	1722	Sisma Y SLD	0	19.2	0	0	4.2E2	0.271
5719	1723	Sisma X SLV	19.6	0	0	0	4.2E2	0.271	5720	1723	Sisma Y SLV	0	19.6	0	0	4.2E2	0.271
5721	1723	Sisma X SLD	19.3	0	0	0	4.2E2	0.271	5722	1723	Sisma Y SLD	0	19.3	0	0	4.2E2	0.271
5723	1724	Sisma X SLV	13.5	0	0	0	2.9E2	0.271	5724	1724	Sisma Y SLV	0	13.5	0	0	2.9E2	0.271
5725	1724	Sisma X SLD	13.3	0	0	0	2.9E2	0.271	5726	1724	Sisma Y SLD	0	13.3	0	0	2.9E2	0.271
5727	1725	Sisma X SLV	15.3	0	0	0	3.3E2	0.271	5728	1725	Sisma Y SLV	0	15.3	0	0	3.3E2	0.271
5729	1725	Sisma X SLD	15	0	0	0	3.3E2	0.271	5730	1725	Sisma Y SLD	0	15	0	0	3.3E2	0.271
5731	1726	Sisma X SLV	8.1	0	0	0	1.7E2	0.271	5732	1726	Sisma Y SLV	0	8.1	0	0	1.7E2	0.271
5733	1726	Sisma X SLD	7.9	0	0	0	1.7E2	0.271	5734	1726	Sisma Y SLD	0	7.9	0	0	1.7E2	0.271
5735	1727	Sisma X SLV	6.2	0	0	0	1.3E2	0.272	5736	1727	Sisma Y SLV	0	6.2	0	0	1.3E2	0.272
5737	1727	Sisma X SLD	6.1	0	0	0	1.3E2	0.272	5738	1727	Sisma Y SLD	0	6.1	0	0	1.3E2	0.272
5739	1728	Sisma X SLV	17.8	0	0	0	3.8E2	0.273	5740	1728	Sisma Y SLV	0	17.8	0	0	3.8E2	0.273
5741	1728	Sisma X SLD	17.5	0	0	0	3.8E2	0.273	5742	1728	Sisma Y SLD	0	17.5	0	0	3.8E2	0.273
5743	1729	Sisma X SLV	7.4	0	0	0	1.6E2	0.274	5744	1729	Sisma Y SLV	0	7.4	0	0	1.6E2	0.274
5745	1729	Sisma X SLD	7.3	0	0	0	1.6E2	0.274	5746	1729	Sisma Y SLD	0	7.3	0	0	1.6E2	0.274
5747	1730	Sisma X SLV	15.5	0	0	0	3.3E2	0.274	5748	1730	Sisma Y SLV	0	15.5	0	0	3.3E2	0.274
5749	1730	Sisma X SLD	15.3	0	0	0	3.3E2	0.274	5750	1730	Sisma Y SLD	0	15.3	0	0	3.3E2	0.274
5751	1731	Sisma X SLV	13.7	0	0	0	2.9E2	0.274	5752	1731	Sisma Y SLV	0	13.7	0	0	2.9E2	0.274
5753	1731	Sisma X SLD	13.5	0	0	0	2.9E2	0.274	5754	1731	Sisma Y SLD	0	13.5	0	0	2.9E2	0.274
5755	1732	Sisma X SLV	7.9	0	0	0	1.7E2	0.275	5756	1732	Sisma Y SLV	0	7.9	0	0	1.7E2	0.275
5757	1732	Sisma X SLD	7.8	0	0	0	1.7E2	0.275	5758	1732	Sisma Y SLD	0	7.8	0	0	1.7E2	0.275
5759	1733	Sisma X SLV	7.2	0	0	0	1.5E2	0.275	5760	1733	Sisma Y SLV	0	7.2	0	0	1.5E2	0.275
5761	1733	Sisma X SLD	7.1	0	0	0	1.5E2	0.275	5762	1733	Sisma Y SLD	0	7.1	0	0	1.5E2	0.275
5763	1734	Sisma X SLV	7.2	0	0	0	1.5E2	0.275	5764	1734	Sisma Y SLV	0	7.2	0	0	1.5E2	0.275
5765	1734	Sisma X SLD	7.1	0	0	0	1.5E2	0.275	5766	1734	Sisma Y SLD	0	7.1	0	0	1.5E2	0.275
5767	1735	Sisma X SLV	13.7	0	0	0	2.9E2	0.275	5768	1735	Sisma Y SLV	0	13.7	0	0	2.9E2	0.275
5769	1735	Sisma X SLD	13.5	0	0	0	2.9E2	0.275	5770	1735	Sisma Y SLD	0	13.5	0	0	2.9E2	0.275
5771	1736	Sisma X SLV	6.2	0	0	0	132.04	0.276	5772	1736	Sisma Y SLV	0	6.2	0	0	132.04	0.276
5773	1736	Sisma X SLD	6.1	0	0	0	132.04	0.276	5774	1736	Sisma Y SLD	0	6.1	0	0	132.04	0.276
5775	1737	Sisma X SLV	4.7	0	0	0	98.562	0.278	5776	1737	Sisma Y SLV	0	4.7	0	0	98.562	0.278
5777	1737	Sisma X SLD	4.6	0	0	0	98.562	0.278	5778	1737	Sisma Y SLD	0	4.6	0	0	98.562	0.278
5779	1738	Sisma X SLV	7	0	0	0	1.5E2	0.279	5780	1738	Sisma Y SLV	0	7	0	0	1.5E2	0.279
5781	1738	Sisma X SLD	6.9	0	0	0	1.5E2	0.279	5782	1738	Sisma Y SLD	0	6.9	0	0	1.5E2	0.279
5783	1739	Sisma X SLV	14.6	0	0	0	306.67	0.279	5784	1739	Sisma Y SLV	0	14.6	0	0	306.67	0.279
5785	1739	Sisma X SLD	14.4	0	0	0	306.67	0.279	5786	1739	Sisma Y SLD	0	14.4	0	0	306.67	0.279
5787	1740	Sisma X SLV	16.3	0	0	0	3.4E2	0.28	5788	1740	Sisma Y SLV	0	16.3	0	0	3.4E2	0.28
5789	1740	Sisma X SLD	16	0	0	0	3.4E2	0.28	5790	1740	Sisma Y SLD	0	16	0	0	3.4E2	0.28
5791	1741	Sisma X SLV	8.6	0	0	0	1.8E2	0.28	5792	1741	Sisma Y SLV	0	8.6	0	0	1.8E2	0.28
5793	1741	Sisma X SLD	8.5	0	0	0	1.8E2	0.28	5794	1741	Sisma Y SLD	0	8.5	0	0	1.8E2	0.28
5795	1742	Sisma X SLV	6.5	0	0	0	1.4E2	0.28	5796	1742	Sisma Y SLV	0	6.5	0	0	1.4E2	0.28
5797	1742	Sisma X SLD	6.4	0	0	0	1.4E2	0.28	5798	1742	Sisma Y SLD	0	6.4	0	0	1.4E2	0.28
5799	1743	Sisma X SLV	6	0	0	0	1.3E2	0.281	5800	1743	Sisma Y SLV	0	6	0	0	1.3E2	0.281
5801	1743	Sisma X SLD	5.9	0	0	0	1.3E2	0.281	5802	1743	Sisma Y SLD	0	5.9	0	0	1.3E2	0.281
5803	1744	Sisma X SLV	19.1	0	0	0	4.0E2	0.281	5804	1744	Sisma Y SLV	0	19.1	0	0	4.0E2	0.281
5805	1744	Sisma X SLD	18.8	0	0	0	4.0E2	0.281	5806	1744	Sisma Y SLD	0	18.8	0	0	4.0E2	0.281
5807	1745	Sisma X SLV	16.4	0	0	0	3.4E2	0.281	5808	1745	Sisma Y SLV	0	16.4	0	0	3.4E2	0.281
5809	1745	Sisma X SLD	16.1	0	0	0	3.4E2	0.281	5810	1745	Sisma Y SLD	0	16.1	0	0	3.4E2	0.281
5811	1746	Sisma X SLV	7.9	0	0	0	1.6E2	0.281	5812	1746	Sisma Y SLV	0	7.9	0	0	1.6E2	0.281
5813	1746	Sisma X SLD	7.7	0	0	0	1.6E2	0.281	5814	1746	Sisma Y SLD	0	7.7	0	0	1.6E2	0.281
5815	1747	Sisma X SLV	14.3	0	0	0	298.1	0.282	5816	1747	Sisma Y SLV	0	14.3	0	0	298.1	0.282
5817	1747	Sisma X SLD	14.1	0	0	0	298.1	0.282	5818	1747	Sisma Y SLD	0	14.1	0	0	298.1	0.282
5819	1748	Sisma X SLV	8.4	0	0	0	1.7E2	0.282	5820	1748	Sisma Y SLV	0	8.4	0	0	1.7E2	0.282
5821	1748	Sisma X SLD	8.2	0	0	0	1.7E2	0.282	5822	1748	Sisma Y SLD	0	8.2	0	0	1.7E2	0.282
5823	1749	Sisma X SLV	7.6	0	0	0	1.6E2	0.282	5824	1749	Sisma Y SLV	0	7.6	0	0	1.6E2	0.282
5825	1749	Sisma X SLD	7.5	0	0	0	1.6E2	0.282	5826	1749	Sisma Y SLD	0	7.5	0	0	1.6E2	0.282
5827	1750	Sisma X SLV	7.6	0	0	0	1.6E2	0.282	5828	1750	Sisma Y SLV	0	7.6	0	0	1.6E2	0.282
5829	1750	Sisma X SLD	7.5	0	0	0	1.6E2	0.282	5830	1750	Sisma Y SLD	0	7.5	0	0	1.6E2	0.282
5831	1751	Sisma X SLV	14.4	0	0	0	3.0E2	0.282	5832	1751	Sisma Y SLV	0	14.4	0	0	3.0E2	0.282
5833	1751	Sisma X SLD	14.2	0	0	0	3.0E2	0.282	5834	1751	Sisma Y SLD	0	14.2	0	0	3.0E2	0.282
5835	1752	Sisma X SLV	7.8	0	0	0	1.6E2	0.285	5836	1752	Sisma Y SLV	0	7.8	0	0	1.6E2	0.285
5837	1752	Sisma X SLD	7.7	0	0	0	1.6E2	0.285	5838	1752	Sisma Y SLD	0	7.7	0	0	1.6E2	0.285
5839	1753	Sisma X SLV	6.6	0	0	0	1.3E2	0.287	5840	1753	Sisma Y SLV	0	6.6	0	0	1.3E2	0.287
5841	1753	Sisma X SLD	6.5	0	0	0	1.3E2	0.287	5842	1753	Sisma Y SLD	0	6.5	0	0	1.3E2	0.287
5843	1754	Sisma X SLV	9.6	0	0	0	1.9E2	0.29	5844	1754	Sisma Y SLV	0	9.6	0	0	1.9E2	0.29

Indice	Nodo	Condizione	Fx	Fy	Fz	Mz	Peso	Gamma	Indice	Nodo	Condizione	Fx	Fy	Fz	Mz	Peso	Gamma
5845	1754	Sisma X SLD	9.5	0	0	0	1.9E2	0.29	5846	1754	Sisma Y SLD	0	9.5	0	0	1.9E2	0.29
5847	1755	Sisma X SLV	7.7	0	0	0	1.6E2	0.29	5848	1755	Sisma Y SLV	0	7.7	0	0	1.6E2	0.29
5849	1755	Sisma X SLD	7.6	0	0	0	1.6E2	0.29	5850	1755	Sisma Y SLD	0	7.6	0	0	1.6E2	0.29
5851	1756	Sisma X SLV	2.5	0	0	0	50.846	0.29	5852	1756	Sisma Y SLV	0	2.5	0	0	50.846	0.29
5853	1756	Sisma X SLD	2.5	0	0	0	50.846	0.29	5854	1756	Sisma Y SLD	0	2.5	0	0	50.846	0.29
5855	1757	Sisma X SLV	3.5	0	0	0	71.1	0.29	5856	1757	Sisma Y SLV	0	3.5	0	0	71.1	0.29
5857	1757	Sisma X SLD	3.5	0	0	0	71.1	0.29	5858	1757	Sisma Y SLD	0	3.5	0	0	71.1	0.29
5859	1758	Sisma X SLV	4.5	0	0	0	90.863	0.29	5860	1758	Sisma Y SLV	0	4.5	0	0	90.863	0.29
5861	1758	Sisma X SLD	4.4	0	0	0	90.863	0.29	5862	1758	Sisma Y SLD	0	4.4	0	0	90.863	0.29
5863	1759	Sisma X SLV	4.1	0	0	0	82.877	0.29	5864	1759	Sisma Y SLV	0	4.1	0	0	82.877	0.29
5865	1759	Sisma X SLD	4	0	0	0	82.877	0.29	5866	1759	Sisma Y SLD	0	4	0	0	82.877	0.29
5867	1760	Sisma X SLV	4	0	0	0	81.339	0.29	5868	1760	Sisma Y SLV	0	4	0	0	81.339	0.29
5869	1760	Sisma X SLD	4	0	0	0	81.339	0.29	5870	1760	Sisma Y SLD	0	4	0	0	81.339	0.29
5871	1761	Sisma X SLV	4	0	0	0	80.001	0.29	5872	1761	Sisma Y SLV	0	4	0	0	80.001	0.29
5873	1761	Sisma X SLD	3.9	0	0	0	80.001	0.29	5874	1761	Sisma Y SLD	0	3.9	0	0	80.001	0.29
5875	1762	Sisma X SLV	11	0	0	0	221.18	0.29	5876	1762	Sisma Y SLV	0	11	0	0	221.18	0.29
5877	1762	Sisma X SLD	10.8	0	0	0	221.18	0.29	5878	1762	Sisma Y SLD	0	10.8	0	0	221.18	0.29
5879	1763	Sisma X SLV	6	0	0	0	1.2E2	0.29	5880	1763	Sisma Y SLV	0	6	0	0	1.2E2	0.29
5881	1763	Sisma X SLD	5.9	0	0	0	1.2E2	0.29	5882	1763	Sisma Y SLD	0	5.9	0	0	1.2E2	0.29
5883	1764	Sisma X SLV	8.7	0	0	0	1.8E2	0.29	5884	1764	Sisma Y SLV	0	8.7	0	0	1.8E2	0.29
5885	1764	Sisma X SLD	8.5	0	0	0	1.8E2	0.29	5886	1764	Sisma Y SLD	0	8.5	0	0	1.8E2	0.29
5887	1765	Sisma X SLV	3.3	0	0	0	67.338	0.29	5888	1765	Sisma Y SLV	0	3.3	0	0	67.338	0.29
5889	1765	Sisma X SLD	3.3	0	0	0	67.338	0.29	5890	1765	Sisma Y SLD	0	3.3	0	0	67.338	0.29
5891	1766	Sisma X SLV	4.4	0	0	0	88.642	0.29	5892	1766	Sisma Y SLV	0	4.4	0	0	88.642	0.29
5893	1766	Sisma X SLD	4.3	0	0	0	88.642	0.29	5894	1766	Sisma Y SLD	0	4.3	0	0	88.642	0.29
5895	1767	Sisma X SLV	4	0	0	0	81.339	0.29	5896	1767	Sisma Y SLV	0	4	0	0	81.339	0.29
5897	1767	Sisma X SLD	4	0	0	0	81.339	0.29	5898	1767	Sisma Y SLD	0	4	0	0	81.339	0.29
5899	1768	Sisma X SLV	4	0	0	0	80.001	0.29	5900	1768	Sisma Y SLV	0	4	0	0	80.001	0.29
5901	1768	Sisma X SLD	3.9	0	0	0	80.001	0.29	5902	1768	Sisma Y SLD	0	3.9	0	0	80.001	0.29
5903	1769	Sisma X SLV	10.7	0	0	0	2.2E2	0.29	5904	1769	Sisma Y SLV	0	10.7	0	0	2.2E2	0.29
5905	1769	Sisma X SLD	10.5	0	0	0	2.2E2	0.29	5906	1769	Sisma Y SLD	0	10.5	0	0	2.2E2	0.29
5907	1770	Sisma X SLV	10	0	0	0	2.0E2	0.29	5908	1770	Sisma Y SLV	0	10	0	0	2.0E2	0.29
5909	1770	Sisma X SLD	9.9	0	0	0	2.0E2	0.29	5910	1770	Sisma Y SLD	0	9.9	0	0	2.0E2	0.29
5911	1771	Sisma X SLV	8.6	0	0	0	1.7E2	0.29	5912	1771	Sisma Y SLV	0	8.6	0	0	1.7E2	0.29
5913	1771	Sisma X SLD	8.4	0	0	0	1.7E2	0.29	5914	1771	Sisma Y SLD	0	8.4	0	0	1.7E2	0.29
5915	1772	Sisma X SLV	7.4	0	0	0	1.5E2	0.29	5916	1772	Sisma Y SLV	0	7.4	0	0	1.5E2	0.29
5917	1772	Sisma X SLD	7.3	0	0	0	1.5E2	0.29	5918	1772	Sisma Y SLD	0	7.3	0	0	1.5E2	0.29
5919	1773	Sisma X SLV	7.6	0	0	0	1.5E2	0.29	5920	1773	Sisma Y SLV	0	7.6	0	0	1.5E2	0.29
5921	1773	Sisma X SLD	7.5	0	0	0	1.5E2	0.29	5922	1773	Sisma Y SLD	0	7.5	0	0	1.5E2	0.29
5923	1774	Sisma X SLV	7.5	0	0	0	1.5E2	0.29	5924	1774	Sisma Y SLV	0	7.5	0	0	1.5E2	0.29
5925	1774	Sisma X SLD	7.4	0	0	0	1.5E2	0.29	5926	1774	Sisma Y SLD	0	7.4	0	0	1.5E2	0.29
5927	1775	Sisma X SLV	11.6	0	0	0	2.3E2	0.292	5928	1775	Sisma Y SLV	0	11.6	0	0	2.3E2	0.292
5929	1775	Sisma X SLD	11.4	0	0	0	2.3E2	0.292	5930	1775	Sisma Y SLD	0	11.4	0	0	2.3E2	0.292
5931	1776	Sisma X SLV	9.8	0	0	0	1.9E2	0.299	5932	1776	Sisma Y SLV	0	9.8	0	0	1.9E2	0.299
5933	1776	Sisma X SLD	9.6	0	0	0	1.9E2	0.299	5934	1776	Sisma Y SLD	0	9.6	0	0	1.9E2	0.299
5935	1777	Sisma X SLV	9.1	0	0	0	1.7E2	0.306	5936	1777	Sisma Y SLV	0	9.1	0	0	1.7E2	0.306
5937	1777	Sisma X SLD	8.9	0	0	0	1.7E2	0.306	5938	1777	Sisma Y SLD	0	8.9	0	0	1.7E2	0.306
5939	1778	Sisma X SLV	5.7	0	0	0	1.1E2	0.309	5940	1778	Sisma Y SLV	0	5.7	0	0	1.1E2	0.309
5941	1778	Sisma X SLD	5.6	0	0	0	1.1E2	0.309	5942	1778	Sisma Y SLD	0	5.6	0	0	1.1E2	0.309
5943	1779	Sisma X SLV	8.8	0	0	0	1.7E2	0.309	5944	1779	Sisma Y SLV	0	8.8	0	0	1.7E2	0.309
5945	1779	Sisma X SLD	8.7	0	0	0	1.7E2	0.309	5946	1779	Sisma Y SLD	0	8.7	0	0	1.7E2	0.309
5947	1780	Sisma X SLV	7.4	0	0	0	141.1	0.309	5948	1780	Sisma Y SLV	0	7.4	0	0	141.1	0.309
5949	1780	Sisma X SLD	7.3	0	0	0	141.1	0.309	5950	1780	Sisma Y SLD	0	7.3	0	0	141.1	0.309
5951	1781	Sisma X SLV	7.5	0	0	0	1.4E2	0.309	5952	1781	Sisma Y SLV	0	7.5	0	0	1.4E2	0.309
5953	1781	Sisma X SLD	7.4	0	0	0	1.4E2	0.309	5954	1781	Sisma Y SLD	0	7.4	0	0	1.4E2	0.309
5955	1782	Sisma X SLV	7.1	0	0	0	1.3E2	0.309	5956	1782	Sisma Y SLV	0	7.1	0	0	1.3E2	0.309
5957	1782	Sisma X SLD	7	0	0	0	1.3E2	0.309	5958	1782	Sisma Y SLD	0	7	0	0	1.3E2	0.309
5959	1783	Sisma X SLV	7.2	0	0	0	1.4E2	0.309	5960	1783	Sisma Y SLV	0	7.2	0	0	1.4E2	0.309
5961	1783	Sisma X SLD	7.1	0	0	0	1.4E2	0.309	5962	1783	Sisma Y SLD	0	7.1	0	0	1.4E2	0.309
5963	1784	Sisma X SLV	5.7	0	0	0	1.1E2	0.309	5964	1784	Sisma Y SLV	0	5.7	0	0	1.1E2	0.309
5965	1784	Sisma X SLD	5.6	0	0	0	1.1E2	0.309	5966	1784	Sisma Y SLD	0	5.6	0	0	1.1E2	0.309
5967	1785	Sisma X SLV	8.5	0	0	0	1.6E2	0.309	5968	1785	Sisma Y SLV	0	8.5	0	0	1.6E2	0.309
5969	1785	Sisma X SLD	8.4	0	0	0	1.6E2	0.309	5970	1785	Sisma Y SLD	0	8.4	0	0	1.6E2	0.309
5971	1786	Sisma X SLV	17.9	0	0	0	3.4E2	0.309	5972	1786	Sisma Y SLV	0	17.9	0	0	3.4E2	0.309
5973	1786	Sisma X SLD	17.6	0	0	0	3.4E2	0.309	5974	1786	Sisma Y SLD	0	17.6	0	0	3.4E2	0.309
5975	1787	Sisma X SLV	16.6	0	0	0	3.2E2	0.309	5976	1787	Sisma Y SLV	0	16.6	0	0	3.2E2	0.309
5977	1787	Sisma X SLD	16.4	0	0	0	3.2E2	0.309	5978	1787	Sisma Y SLD	0	16.4	0	0	3.2E2	0.309
5979	1788	Sisma X SLV	11.1	0	0	0	2.1E2	0.309	5980	1788	Sisma Y SLV	0	11.1	0	0	2.1E2	0.309
5981	1788	Sisma X SLD	10.9	0	0	0	2.1E2	0.309	5982	1788	Sisma Y SLD	0	10.9	0	0	2.1E2	0.309
5983	1789	Sisma X SLV	8.3	0	0	0	1.6E2	0.309	5984	1789	Sisma Y SLV	0	8.3	0	0	1.6E2	0.309
5985	1789	Sisma X SLD	8.2	0	0	0	1.6E2	0.309	5986	1789	Sisma Y SLD	0	8.2	0	0	1.6E2	0.309
5987	1790	Sisma X SLV	5.5	0	0	0	1.1E2	0.309	5988	1790	Sisma Y SLV	0	5.5	0	0	1.1E2	0.309
5989	1790	Sisma X SLD	5.5	0	0	0	1.1E2	0.309	5990	1790	Sisma Y SLD	0	5.5	0	0	1.1E2	0.309
5991	1791	Sisma X SLV	8.1	0	0	0	1.5E2	0.309	5992	1791	Sisma Y SLV	0	8.1	0	0	1.5E2	0.309
5993	1791	Sisma X SLD	8	0	0	0	1.5E2	0.309	5994	1791	Sisma Y SLD	0	8	0	0	1.5E2	0.309
5995	1792	Sisma X SLV	7.9	0	0	0	1.5E2	0.309	5996	1792	Sisma Y SLV	0	7.9	0	0	1.5E2	0.309
5997	1792	Sisma X SLD	7.8	0	0	0	1.5E2	0.309	5998	1792	Sisma Y SLD	0	7.8	0	0	1.5E2	0.309
5999	1793	Sisma X SLV	4.6	0	0	0	87.168	0.309	6000	1793	Sisma Y SLV	0	4.6	0	0	87.168	0.309
6001	1793	Sisma X SLD	4.5	0	0	0	87.168	0.309	6002	1793	Sisma Y SLD	0	4.5	0	0	87.168	0.309
6003	1794	Sisma X SLV	6.9	0	0	0	1.3E2	0.309	6004	1794	Sisma Y SLV	0	6.9	0	0	1.3E2	0.309
6005	1794	Sisma X SLD	6.8	0	0	0	1.3E2	0.309	6006	1794	Sisma Y SLD	0	6.8	0	0	1.3E2	0.309
6007	1795	Sisma X SLV	9.2	0	0	0	1.8E2	0.309	6008	1795	Sisma Y SLV	0	9.2	0	0	1.8E2	0.309
6009	1795	Sisma X SLD	9.1	0	0	0	1.8E2	0.309	6010	1795	Sisma Y SLD	0	9.1	0	0	1.8E2	0.309
6011	1796	Sisma X SLV	20.7	0	0	0	3.9E2	0.309	6012	1796	Sisma Y SLV	0	20.7	0	0	3.9E2	0.309
6013	1796	Sisma X SLD	20.4	0	0	0	3.9E2	0.309	6014	1796	Sisma Y SLD	0	20.4	0	0	3.9E2	0.309
6015	1797	Sisma X SLV	7.5	0	0	0	1.4E2	0.309	6016	1797	Sisma Y SLV	0	7.5	0	0	1.4E2	0.309
6017	1797	Sisma X SLD	7.4	0	0	0	1.4E2	0.309	6018	1797	Sisma Y SLD	0	7.4	0	0	1.4E2	0.309
6019	1798	Sisma X SLV	8.3	0	0	0	1.6E2	0.309	6020	1798	Sisma Y SLV	0	8.3	0	0	1.6E2	0.309
6021	1798	Sisma X SLD	8.2	0	0	0	1.6E2	0.309	6022	1798	Sisma Y SLD	0	8.2	0	0	1.6E2	0.309
6023	1799	Sisma X SLV	8.2	0	0	0	1.6E2	0.309	6024	1799	Sisma Y SLV	0	8.2	0	0	1.6E2	0.309
6025	1799	Sisma X SLD	8.1	0	0	0	1.6E2	0.309	6026	1799	Sisma Y SLD	0	8.1	0	0	1.6E2	0.309
6027	1800	Sisma X SLV	7.2	0	0	0	1.4E2	0.309	6028	1800	Sisma Y SLV	0	7.2	0	0	1.4E2	0.309
6029	1800	Sisma X SLD	7.1	0	0	0	1.4E2	0.309	6030	1800	Sisma Y SLD	0	7.1	0	0	1.4E2	0.309
6031	1801	Sisma X SLV	7.2	0	0	0	1.4E2	0.309	6032	1801	Sisma Y SLV	0	7.2	0	0	1.4E2	0.309
6033	1801	Sisma X SLD	7.1	0	0	0	1.4E2	0.309	6034	1801	Sisma Y SLD	0	7.1	0	0	1.4E2	0.309
6035	1802	Sisma X SLV	6.7	0	0	0	1.3E2	0.309	6036	1802	Sisma Y SLV	0	6.7	0	0	1.3E2	0.309
6037	1802	Sisma X SLD	6.6	0	0	0	1.3E2	0.309	6038	1802	Sisma Y SLD	0	6.6	0	0	1.3E2	0.309
6039	1803	Sisma X SLV	16.3	0	0	0	3.1E2	0.31	6040	1803	Sisma Y SLV	0	16.3	0	0	3.1E2	0.31
6041	1803	Sisma X SLD	16	0	0	0	3.1E2	0.31	6042	1803	Sisma Y SLD	0	16	0	0	3.1E2	0.31
6043	1804	Sisma X SLV	16	0	0	0	3.0E2	0.31	6044	1804	Sisma Y SLV	0	16	0	0	3.0E2	0.31
6045	1804	Sisma X SLD	15.8	0	0	0	3.0E2	0.31	6046	1804	Sisma Y SLD	0	15.8	0	0	3.0E2	0.31
6047	1805	Sisma X SLV	14.6	0	0	0	2.8E2	0.31	6048	1805	Sisma Y SLV	0	14.6	0	0	2.8E2	0.31
6049	1805	Sisma X SLD	14.4	0	0	0	2.8E2	0.31	6050	1805	Sisma Y SLD	0	14.4	0	0	2.8E2	0.31
6051	1806	Sisma X SLV	14.6	0	0	0	2.7E2	0.31	6052	1806	Sisma Y SLV	0	14.6	0	0	2.7E2	0.31

Indice	Nodo	Condizione	Fx	Fy	Fz	Mz	Peso	Gamma	Indice	Nodo	Condizione	Fx	Fy	Fz	Mz	Peso	Gamma
6053	1806	Sisma X SLD	14.3	0	0	0	2.7E2	0.31	6054	1806	Sisma Y SLD	0	14.3	0	0	2.7E2	0.31
6055	1807	Sisma X SLV	15.4	0	0	0	291.07	0.31	6056	1807	Sisma Y SLV	0	15.4	0	0	291.07	0.31
6057	1807	Sisma X SLD	15.2	0	0	0	291.07	0.31	6058	1807	Sisma Y SLD	0	15.2	0	0	291.07	0.31
6059	1808	Sisma X SLV	16.8	0	0	0	3.2E2	0.311	6060	1808	Sisma Y SLV	0	16.8	0	0	3.2E2	0.311
6061	1808	Sisma X SLD	16.5	0	0	0	3.2E2	0.311	6062	1808	Sisma Y SLD	0	16.5	0	0	3.2E2	0.311
6063	1809	Sisma X SLV	16.5	0	0	0	3.1E2	0.311	6064	1809	Sisma Y SLV	0	16.5	0	0	3.1E2	0.311
6065	1809	Sisma X SLD	16.3	0	0	0	3.1E2	0.311	6066	1809	Sisma Y SLD	0	16.3	0	0	3.1E2	0.311
6067	1810	Sisma X SLV	14.9	0	0	0	2.8E2	0.311	6068	1810	Sisma Y SLV	0	14.9	0	0	2.8E2	0.311
6069	1810	Sisma X SLD	14.7	0	0	0	2.8E2	0.311	6070	1810	Sisma Y SLD	0	14.7	0	0	2.8E2	0.311
6071	1811	Sisma X SLV	15.6	0	0	0	2.9E2	0.311	6072	1811	Sisma Y SLV	0	15.6	0	0	2.9E2	0.311
6073	1811	Sisma X SLD	15.4	0	0	0	2.9E2	0.311	6074	1811	Sisma Y SLD	0	15.4	0	0	2.9E2	0.311
6075	1812	Sisma X SLV	14.7	0	0	0	2.8E2	0.311	6076	1812	Sisma Y SLV	0	14.7	0	0	2.8E2	0.311
6077	1812	Sisma X SLD	14.4	0	0	0	2.8E2	0.311	6078	1812	Sisma Y SLD	0	14.4	0	0	2.8E2	0.311
6079	1813	Sisma X SLV	16.1	0	0	0	3.0E2	0.312	6080	1813	Sisma Y SLV	0	16.1	0	0	3.0E2	0.312
6081	1813	Sisma X SLD	15.9	0	0	0	3.0E2	0.312	6082	1813	Sisma Y SLD	0	15.9	0	0	3.0E2	0.312
6083	1814	Sisma X SLV	15.4	0	0	0	2.9E2	0.312	6084	1814	Sisma Y SLV	0	15.4	0	0	2.9E2	0.312
6085	1814	Sisma X SLD	15.2	0	0	0	2.9E2	0.312	6086	1814	Sisma Y SLD	0	15.2	0	0	2.9E2	0.312
6087	1815	Sisma X SLV	16.2	0	0	0	3.1E2	0.312	6088	1815	Sisma Y SLV	0	16.2	0	0	3.1E2	0.312
6089	1815	Sisma X SLD	16	0	0	0	3.1E2	0.312	6090	1815	Sisma Y SLD	0	16	0	0	3.1E2	0.312
6091	1816	Sisma X SLV	15.9	0	0	0	3.0E2	0.312	6092	1816	Sisma Y SLV	0	15.9	0	0	3.0E2	0.312
6093	1816	Sisma X SLD	15.6	0	0	0	3.0E2	0.312	6094	1816	Sisma Y SLD	0	15.6	0	0	3.0E2	0.312
6095	1817	Sisma X SLV	14.7	0	0	0	2.8E2	0.312	6096	1817	Sisma Y SLV	0	14.7	0	0	2.8E2	0.312
6097	1817	Sisma X SLD	14.5	0	0	0	2.8E2	0.312	6098	1817	Sisma Y SLD	0	14.5	0	0	2.8E2	0.312
6099	1818	Sisma X SLV	14.8	0	0	0	2.8E2	0.313	6100	1818	Sisma Y SLV	0	14.8	0	0	2.8E2	0.313
6101	1818	Sisma X SLD	14.6	0	0	0	2.8E2	0.313	6102	1818	Sisma Y SLD	0	14.6	0	0	2.8E2	0.313
6103	1819	Sisma X SLV	12	0	0	0	2.2E2	0.313	6104	1819	Sisma Y SLV	0	12	0	0	2.2E2	0.313
6105	1819	Sisma X SLD	11.8	0	0	0	2.2E2	0.313	6106	1819	Sisma Y SLD	0	11.8	0	0	2.2E2	0.313
6107	1820	Sisma X SLV	17.4	0	0	0	3.2E2	0.313	6108	1820	Sisma Y SLV	0	17.4	0	0	3.2E2	0.313
6109	1820	Sisma X SLD	17.1	0	0	0	3.2E2	0.313	6110	1820	Sisma Y SLD	0	17.1	0	0	3.2E2	0.313
6111	1821	Sisma X SLV	14.6	0	0	0	2.7E2	0.313	6112	1821	Sisma Y SLV	0	14.6	0	0	2.7E2	0.313
6113	1821	Sisma X SLD	14.4	0	0	0	2.7E2	0.313	6114	1821	Sisma Y SLD	0	14.4	0	0	2.7E2	0.313
6115	1822	Sisma X SLV	15.4	0	0	0	2.9E2	0.313	6116	1822	Sisma Y SLV	0	15.4	0	0	2.9E2	0.313
6117	1822	Sisma X SLD	15.1	0	0	0	2.9E2	0.313	6118	1822	Sisma Y SLD	0	15.1	0	0	2.9E2	0.313
6119	1823	Sisma X SLV	13.8	0	0	0	2.6E2	0.313	6120	1823	Sisma Y SLV	0	13.8	0	0	2.6E2	0.313
6121	1823	Sisma X SLD	13.6	0	0	0	2.6E2	0.313	6122	1823	Sisma Y SLD	0	13.6	0	0	2.6E2	0.313
6123	1824	Sisma X SLV	12	0	0	0	2.2E2	0.314	6124	1824	Sisma Y SLV	0	12	0	0	2.2E2	0.314
6125	1824	Sisma X SLD	11.8	0	0	0	2.2E2	0.314	6126	1824	Sisma Y SLD	0	11.8	0	0	2.2E2	0.314
6127	1825	Sisma X SLV	14.9	0	0	0	2.8E2	0.314	6128	1825	Sisma Y SLV	0	14.9	0	0	2.8E2	0.314
6129	1825	Sisma X SLD	14.6	0	0	0	2.8E2	0.314	6130	1825	Sisma Y SLD	0	14.6	0	0	2.8E2	0.314
6131	1826	Sisma X SLV	14.3	0	0	0	2.7E2	0.314	6132	1826	Sisma Y SLV	0	14.3	0	0	2.7E2	0.314
6133	1826	Sisma X SLD	14.1	0	0	0	2.7E2	0.314	6134	1826	Sisma Y SLD	0	14.1	0	0	2.7E2	0.314
6135	1827	Sisma X SLV	15.3	0	0	0	2.8E2	0.314	6136	1827	Sisma Y SLV	0	15.3	0	0	2.8E2	0.314
6137	1827	Sisma X SLD	15	0	0	0	2.8E2	0.314	6138	1827	Sisma Y SLD	0	15	0	0	2.8E2	0.314
6139	1828	Sisma X SLV	14.8	0	0	0	2.8E2	0.314	6140	1828	Sisma Y SLV	0	14.8	0	0	2.8E2	0.314
6141	1828	Sisma X SLD	14.5	0	0	0	2.8E2	0.314	6142	1828	Sisma Y SLD	0	14.5	0	0	2.8E2	0.314
6143	1829	Sisma X SLV	14.8	0	0	0	2.8E2	0.314	6144	1829	Sisma Y SLV	0	14.8	0	0	2.8E2	0.314
6145	1829	Sisma X SLD	14.5	0	0	0	2.8E2	0.314	6146	1829	Sisma Y SLD	0	14.5	0	0	2.8E2	0.314
6147	1830	Sisma X SLV	16.7	0	0	0	3.1E2	0.314	6148	1830	Sisma Y SLV	0	16.7	0	0	3.1E2	0.314
6149	1830	Sisma X SLD	16.4	0	0	0	3.1E2	0.314	6150	1830	Sisma Y SLD	0	16.4	0	0	3.1E2	0.314
6151	1831	Sisma X SLV	14.8	0	0	0	2.8E2	0.314	6152	1831	Sisma Y SLV	0	14.8	0	0	2.8E2	0.314
6153	1831	Sisma X SLD	14.5	0	0	0	2.8E2	0.314	6154	1831	Sisma Y SLD	0	14.5	0	0	2.8E2	0.314
6155	1832	Sisma X SLV	14.9	0	0	0	2.8E2	0.315	6156	1832	Sisma Y SLV	0	14.9	0	0	2.8E2	0.315
6157	1832	Sisma X SLD	14.7	0	0	0	2.8E2	0.315	6158	1832	Sisma Y SLD	0	14.7	0	0	2.8E2	0.315
6159	1833	Sisma X SLV	15	0	0	0	2.8E2	0.315	6160	1833	Sisma Y SLV	0	15	0	0	2.8E2	0.315
6161	1833	Sisma X SLD	14.7	0	0	0	2.8E2	0.315	6162	1833	Sisma Y SLD	0	14.7	0	0	2.8E2	0.315
6163	1834	Sisma X SLV	15	0	0	0	2.8E2	0.316	6164	1834	Sisma Y SLV	0	15	0	0	2.8E2	0.316
6165	1834	Sisma X SLD	14.8	0	0	0	2.8E2	0.316	6166	1834	Sisma Y SLD	0	14.8	0	0	2.8E2	0.316
6167	1835	Sisma X SLV	16.6	0	0	0	307.98	0.316	6168	1835	Sisma Y SLV	0	16.6	0	0	307.98	0.316
6169	1835	Sisma X SLD	16.4	0	0	0	307.98	0.316	6170	1835	Sisma Y SLD	0	16.4	0	0	307.98	0.316
6171	1836	Sisma X SLV	14.9	0	0	0	2.8E2	0.317	6172	1836	Sisma Y SLV	0	14.9	0	0	2.8E2	0.317
6173	1836	Sisma X SLD	14.7	0	0	0	2.8E2	0.317	6174	1836	Sisma Y SLD	0	14.7	0	0	2.8E2	0.317
6175	1837	Sisma X SLV	15.7	0	0	0	290.88	0.317	6176	1837	Sisma Y SLV	0	15.7	0	0	290.88	0.317
6177	1837	Sisma X SLD	15.5	0	0	0	290.88	0.317	6178	1837	Sisma Y SLD	0	15.5	0	0	290.88	0.317
6179	1838	Sisma X SLV	14.3	0	0	0	2.7E2	0.317	6180	1838	Sisma Y SLV	0	14.3	0	0	2.7E2	0.317
6181	1838	Sisma X SLD	14.1	0	0	0	2.7E2	0.317	6182	1838	Sisma Y SLD	0	14.1	0	0	2.7E2	0.317
6183	1839	Sisma X SLV	12.9	0	0	0	2.4E2	0.317	6184	1839	Sisma Y SLV	0	12.9	0	0	2.4E2	0.317
6185	1839	Sisma X SLD	12.7	0	0	0	2.4E2	0.317	6186	1839	Sisma Y SLD	0	12.7	0	0	2.4E2	0.317
6187	1840	Sisma X SLV	12.9	0	0	0	239.03	0.317	6188	1840	Sisma Y SLV	0	12.9	0	0	239.03	0.317
6189	1840	Sisma X SLD	12.7	0	0	0	239.03	0.317	6190	1840	Sisma Y SLD	0	12.7	0	0	239.03	0.317
6191	1841	Sisma X SLV	15.1	0	0	0	2.8E2	0.317	6192	1841	Sisma Y SLV	0	15.1	0	0	2.8E2	0.317
6193	1841	Sisma X SLD	14.9	0	0	0	2.8E2	0.317	6194	1841	Sisma Y SLD	0	14.9	0	0	2.8E2	0.317
6195	1842	Sisma X SLV	15.2	0	0	0	2.8E2	0.318	6196	1842	Sisma Y SLV	0	15.2	0	0	2.8E2	0.318
6197	1842	Sisma X SLD	14.9	0	0	0	2.8E2	0.318	6198	1842	Sisma Y SLD	0	14.9	0	0	2.8E2	0.318
6199	1843	Sisma X SLV	16.1	0	0	0	3.0E2	0.318	6200	1843	Sisma Y SLV	0	16.1	0	0	3.0E2	0.318
6201	1843	Sisma X SLD	15.8	0	0	0	3.0E2	0.318	6202	1843	Sisma Y SLD	0	15.8	0	0	3.0E2	0.318
6203	1844	Sisma X SLV	15.2	0	0	0	279.05	0.318	6204	1844	Sisma Y SLV	0	15.2	0	0	279.05	0.318
6205	1844	Sisma X SLD	14.9	0	0	0	279.05	0.318	6206	1844	Sisma Y SLD	0	14.9	0	0	279.05	0.318
6207	1845	Sisma X SLV	15.9	0	0	0	2.9E2	0.318	6208	1845	Sisma Y SLV	0	15.9	0	0	2.9E2	0.318
6209	1845	Sisma X SLD	15.7	0	0	0	2.9E2	0.318	6210	1845	Sisma Y SLD	0	15.7	0	0	2.9E2	0.318
6211	1846	Sisma X SLV	14.7	0	0	0	2.7E2	0.318	6212	1846	Sisma Y SLV	0	14.7	0	0	2.7E2	0.318
6213	1846	Sisma X SLD	14.5	0	0	0	2.7E2	0.318	6214	1846	Sisma Y SLD	0	14.5	0	0	2.7E2	0.318
6215	1847	Sisma X SLV	15.2	0	0	0	2.8E2	0.319	6216	1847	Sisma Y SLV	0	15.2	0	0	2.8E2	0.319
6217	1847	Sisma X SLD	15	0	0	0	2.8E2	0.319	6218	1847	Sisma Y SLD	0	15	0	0	2.8E2	0.319
6219	1848	Sisma X SLV	15.4	0	0	0	2.8E2	0.319	6220	1848	Sisma Y SLV	0	15.4	0	0	2.8E2	0.319
6221	1848	Sisma X SLD	15.2	0	0	0	2.8E2	0.319	6222	1848	Sisma Y SLD	0	15.2	0	0	2.8E2	0.319
6223	1849	Sisma X SLV	15.6	0	0	0	2.9E2	0.319	6224	1849	Sisma Y SLV	0	15.6	0	0	2.9E2	0.319
6225	1849	Sisma X SLD	15.3	0	0	0	2.9E2	0.319	6226	1849	Sisma Y SLD	0	15.3	0	0	2.9E2	0.319
6227	1850	Sisma X SLV	15.3	0	0	0	2.8E2	0.319	6228	1850	Sisma Y SLV	0	15.3	0	0	2.8E2	0.319
6229	1850	Sisma X SLD	15	0	0	0	2.8E2	0.319	6230	1850	Sisma Y SLD	0	15	0	0	2.8E2	0.319
6231	1851	Sisma X SLV	16.1	0	0	0	294.99	0.319	6232	1851	Sisma Y SLV	0	16.1	0	0	294.99	0.319
6233	1851	Sisma X SLD	15.8	0	0	0	294.99	0.319	6234	1851	Sisma Y SLD	0	15.8	0	0	294.99	0.319
6235	1852	Sisma X SLV	14.9	0	0	0	2.7E2	0.319	6236	1852	Sisma Y SLV	0	14.9	0	0	2.7E2	0.319
6237	1852	Sisma X SLD	14.7	0	0	0	2.7E2	0.319	6238	1852	Sisma Y SLD	0	14.7	0	0	2.7E2	0.319
6239	1853	Sisma X SLV	15.2	0	0	0	2.8E2	0.319	6240	1853	Sisma Y SLV	0	15.2	0	0	2.8E2	0.319
6241	1853	Sisma X SLD	14.9	0	0	0	2.8E2	0.319	6242	1853	Sisma Y SLD	0	14.9	0	0	2.8E2	0.319
6243	1854	Sisma X SLV	15.3	0	0	0	2.8E2	0.319	6244	1854	Sisma Y SLV	0	15.3	0	0	2.8E2	0.319
6245	1854	Sisma X SLD	15.1	0	0	0	2.8E2	0.319	6246	1854	Sisma Y SLD	0	15.1	0	0	2.8E2	0.319
6247	1855	Sisma X SLV	15	0	0	0	2.8E2	0.319	6248	1855	Sisma Y SLV	0	15	0	0	2.8E2	0.319
6249	1855	Sisma X SLD	14.8	0	0	0	2.8E2	0.319	6250	1855	Sisma Y SLD	0	14.8	0	0	2.8E2	0.319
6251	1856	Sisma X SLV	16.1	0	0	0	3.0E2	0.319	6252	1856	Sisma Y SLV	0	16.1	0	0	3.0E2	0.319
6253	1856	Sisma X SLD	15.9	0	0	0	3.0E2	0.319	6254	1856	Sisma Y SLD	0	15.9	0	0	3.0E2	0.319

Indice	Nodo	Condizione	Fx	Fy	Fz	Mz	Peso	Gamma	Indice	Nodo	Condizione	Fx	Fy	Fz	Mz	Peso	Gamma
6255	1857	Sisma X SLV	15.1	0	0	0	2.8E2	0.319	6256	1857	Sisma Y SLV	0	15.1	0	0	2.8E2	0.319
6257	1857	Sisma X SLD	14.8	0	0	0	2.8E2	0.319	6258	1857	Sisma Y SLD	0	14.8	0	0	2.8E2	0.319
6259	1858	Sisma X SLV	15.3	0	0	0	2.8E2	0.319	6260	1858	Sisma Y SLV	0	15.3	0	0	2.8E2	0.319
6261	1858	Sisma X SLD	15.1	0	0	0	2.8E2	0.319	6262	1858	Sisma Y SLD	0	15.1	0	0	2.8E2	0.319
6263	1859	Sisma X SLV	15	0	0	0	2.8E2	0.319	6264	1859	Sisma Y SLV	0	15	0	0	2.8E2	0.319
6265	1859	Sisma X SLD	14.8	0	0	0	2.8E2	0.319	6266	1859	Sisma Y SLD	0	14.8	0	0	2.8E2	0.319
6267	1860	Sisma X SLV	15.3	0	0	0	2.8E2	0.319	6268	1860	Sisma Y SLV	0	15.3	0	0	2.8E2	0.319
6269	1860	Sisma X SLD	15.1	0	0	0	2.8E2	0.319	6270	1860	Sisma Y SLD	0	15.1	0	0	2.8E2	0.319
6271	1861	Sisma X SLV	15	0	0	0	2.8E2	0.319	6272	1861	Sisma Y SLV	0	15	0	0	2.8E2	0.319
6273	1861	Sisma X SLD	14.8	0	0	0	2.8E2	0.319	6274	1861	Sisma Y SLD	0	14.8	0	0	2.8E2	0.319
6275	1862	Sisma X SLV	14.3	0	0	0	262.54	0.319	6276	1862	Sisma Y SLV	0	14.3	0	0	262.54	0.319
6277	1862	Sisma X SLD	14.1	0	0	0	262.54	0.319	6278	1862	Sisma Y SLD	0	14.1	0	0	262.54	0.319
6279	1863	Sisma X SLV	25.8	0	0	0	4.7E2	0.319	6280	1863	Sisma Y SLV	0	25.8	0	0	4.7E2	0.319
6281	1863	Sisma X SLD	25.4	0	0	0	4.7E2	0.319	6282	1863	Sisma Y SLD	0	25.4	0	0	4.7E2	0.319
6283	1864	Sisma X SLV	23.8	0	0	0	4.4E2	0.319	6284	1864	Sisma Y SLV	0	23.8	0	0	4.4E2	0.319
6285	1864	Sisma X SLD	23.5	0	0	0	4.4E2	0.319	6286	1864	Sisma Y SLD	0	23.5	0	0	4.4E2	0.319
6287	1865	Sisma X SLV	15.3	0	0	0	2.8E2	0.319	6288	1865	Sisma Y SLV	0	15.3	0	0	2.8E2	0.319
6289	1865	Sisma X SLD	15.1	0	0	0	2.8E2	0.319	6290	1865	Sisma Y SLD	0	15.1	0	0	2.8E2	0.319
6291	1866	Sisma X SLV	14.3	0	0	0	2.6E2	0.319	6292	1866	Sisma Y SLV	0	14.3	0	0	2.6E2	0.319
6293	1866	Sisma X SLD	14.1	0	0	0	2.6E2	0.319	6294	1866	Sisma Y SLD	0	14.1	0	0	2.6E2	0.319
6295	1867	Sisma X SLV	16.9	0	0	0	3.1E2	0.319	6296	1867	Sisma Y SLV	0	16.9	0	0	3.1E2	0.319
6297	1867	Sisma X SLD	16.6	0	0	0	3.1E2	0.319	6298	1867	Sisma Y SLD	0	16.6	0	0	3.1E2	0.319
6299	1868	Sisma X SLV	16.9	0	0	0	3.1E2	0.319	6300	1868	Sisma Y SLV	0	16.9	0	0	3.1E2	0.319
6301	1868	Sisma X SLD	16.6	0	0	0	3.1E2	0.319	6302	1868	Sisma Y SLD	0	16.6	0	0	3.1E2	0.319
6303	1869	Sisma X SLV	17.1	0	0	0	313.52	0.319	6304	1869	Sisma Y SLV	0	17.1	0	0	313.52	0.319
6305	1869	Sisma X SLD	16.8	0	0	0	313.52	0.319	6306	1869	Sisma Y SLD	0	16.8	0	0	313.52	0.319
6307	1870	Sisma X SLV	17.1	0	0	0	313.52	0.319	6308	1870	Sisma Y SLV	0	17.1	0	0	313.52	0.319
6309	1870	Sisma X SLD	16.8	0	0	0	313.52	0.319	6310	1870	Sisma Y SLD	0	16.8	0	0	313.52	0.319
6311	1871	Sisma X SLV	17.4	0	0	0	3.2E2	0.319	6312	1871	Sisma Y SLV	0	17.4	0	0	3.2E2	0.319
6313	1871	Sisma X SLD	17.1	0	0	0	3.2E2	0.319	6314	1871	Sisma Y SLD	0	17.1	0	0	3.2E2	0.319
6315	1872	Sisma X SLV	17.4	0	0	0	3.2E2	0.319	6316	1872	Sisma Y SLV	0	17.4	0	0	3.2E2	0.319
6317	1872	Sisma X SLD	17.1	0	0	0	3.2E2	0.319	6318	1872	Sisma Y SLD	0	17.1	0	0	3.2E2	0.319
6319	1873	Sisma X SLV	17.8	0	0	0	3.3E2	0.319	6320	1873	Sisma Y SLV	0	17.8	0	0	3.3E2	0.319
6321	1873	Sisma X SLD	17.5	0	0	0	3.3E2	0.319	6322	1873	Sisma Y SLD	0	17.5	0	0	3.3E2	0.319
6323	1874	Sisma X SLV	17.8	0	0	0	3.3E2	0.319	6324	1874	Sisma Y SLV	0	17.8	0	0	3.3E2	0.319
6325	1874	Sisma X SLD	17.5	0	0	0	3.3E2	0.319	6326	1874	Sisma Y SLD	0	17.5	0	0	3.3E2	0.319
6327	1875	Sisma X SLV	18.1	0	0	0	3.3E2	0.319	6328	1875	Sisma Y SLV	0	18.1	0	0	3.3E2	0.319
6329	1875	Sisma X SLD	17.8	0	0	0	3.3E2	0.319	6330	1875	Sisma Y SLD	0	17.8	0	0	3.3E2	0.319
6331	1876	Sisma X SLV	18.1	0	0	0	3.3E2	0.319	6332	1876	Sisma Y SLV	0	18.1	0	0	3.3E2	0.319
6333	1876	Sisma X SLD	17.8	0	0	0	3.3E2	0.319	6334	1876	Sisma Y SLD	0	17.8	0	0	3.3E2	0.319
6335	1877	Sisma X SLV	18.3	0	0	0	3.4E2	0.319	6336	1877	Sisma Y SLV	0	18.3	0	0	3.4E2	0.319
6337	1877	Sisma X SLD	18	0	0	0	3.4E2	0.319	6338	1877	Sisma Y SLD	0	18	0	0	3.4E2	0.319
6339	1878	Sisma X SLV	18.3	0	0	0	3.4E2	0.319	6340	1878	Sisma Y SLV	0	18.3	0	0	3.4E2	0.319
6341	1878	Sisma X SLD	18	0	0	0	3.4E2	0.319	6342	1878	Sisma Y SLD	0	18	0	0	3.4E2	0.319
6343	1879	Sisma X SLV	18.4	0	0	0	3.4E2	0.319	6344	1879	Sisma Y SLV	0	18.4	0	0	3.4E2	0.319
6345	1879	Sisma X SLD	18.1	0	0	0	3.4E2	0.319	6346	1879	Sisma Y SLD	0	18.1	0	0	3.4E2	0.319
6347	1880	Sisma X SLV	18.4	0	0	0	3.4E2	0.319	6348	1880	Sisma Y SLV	0	18.4	0	0	3.4E2	0.319
6349	1880	Sisma X SLD	18.1	0	0	0	3.4E2	0.319	6350	1880	Sisma Y SLD	0	18.1	0	0	3.4E2	0.319
6351	1881	Sisma X SLV	18.5	0	0	0	3.4E2	0.319	6352	1881	Sisma Y SLV	0	18.5	0	0	3.4E2	0.319
6353	1881	Sisma X SLD	18.2	0	0	0	3.4E2	0.319	6354	1881	Sisma Y SLD	0	18.2	0	0	3.4E2	0.319
6355	1882	Sisma X SLV	18.5	0	0	0	3.4E2	0.319	6356	1882	Sisma Y SLV	0	18.5	0	0	3.4E2	0.319
6357	1882	Sisma X SLD	18.2	0	0	0	3.4E2	0.319	6358	1882	Sisma Y SLD	0	18.2	0	0	3.4E2	0.319
6359	1883	Sisma X SLV	18.5	0	0	0	3.4E2	0.319	6360	1883	Sisma Y SLV	0	18.5	0	0	3.4E2	0.319
6361	1883	Sisma X SLD	18.2	0	0	0	3.4E2	0.319	6362	1883	Sisma Y SLD	0	18.2	0	0	3.4E2	0.319
6363	1884	Sisma X SLV	18.5	0	0	0	3.4E2	0.319	6364	1884	Sisma Y SLV	0	18.5	0	0	3.4E2	0.319
6365	1884	Sisma X SLD	18.2	0	0	0	3.4E2	0.319	6366	1884	Sisma Y SLD	0	18.2	0	0	3.4E2	0.319
6367	1885	Sisma X SLV	18.5	0	0	0	3.4E2	0.319	6368	1885	Sisma Y SLV	0	18.5	0	0	3.4E2	0.319
6369	1885	Sisma X SLD	18.2	0	0	0	3.4E2	0.319	6370	1885	Sisma Y SLD	0	18.2	0	0	3.4E2	0.319
6371	1886	Sisma X SLV	18.5	0	0	0	3.4E2	0.319	6372	1886	Sisma Y SLV	0	18.5	0	0	3.4E2	0.319
6373	1886	Sisma X SLD	18.2	0	0	0	3.4E2	0.319	6374	1886	Sisma Y SLD	0	18.2	0	0	3.4E2	0.319
6375	1887	Sisma X SLV	18.5	0	0	0	340.09	0.319	6376	1887	Sisma Y SLV	0	18.5	0	0	340.09	0.319
6377	1887	Sisma X SLD	18.2	0	0	0	340.09	0.319	6378	1887	Sisma Y SLD	0	18.2	0	0	340.09	0.319
6379	1888	Sisma X SLV	18.5	0	0	0	340.09	0.319	6380	1888	Sisma Y SLV	0	18.5	0	0	340.09	0.319
6381	1888	Sisma X SLD	18.2	0	0	0	340.09	0.319	6382	1888	Sisma Y SLD	0	18.2	0	0	340.09	0.319
6383	1889	Sisma X SLV	27.5	0	0	0	504.8	0.319	6384	1889	Sisma Y SLV	0	27.5	0	0	504.8	0.319
6385	1889	Sisma X SLD	27.1	0	0	0	504.8	0.319	6386	1889	Sisma Y SLD	0	27.1	0	0	504.8	0.319
6387	1890	Sisma X SLV	26.3	0	0	0	482.87	0.319	6388	1890	Sisma Y SLV	0	26.3	0	0	482.87	0.319
6389	1890	Sisma X SLD	25.9	0	0	0	482.87	0.319	6390	1890	Sisma Y SLD	0	25.9	0	0	482.87	0.319
6391	1891	Sisma X SLV	17.7	0	0	0	3.3E2	0.319	6392	1891	Sisma Y SLV	0	17.7	0	0	3.3E2	0.319
6393	1891	Sisma X SLD	17.4	0	0	0	3.3E2	0.319	6394	1891	Sisma Y SLD	0	17.4	0	0	3.3E2	0.319
6395	1892	Sisma X SLV	17.7	0	0	0	3.3E2	0.319	6396	1892	Sisma Y SLV	0	17.7	0	0	3.3E2	0.319
6397	1892	Sisma X SLD	17.4	0	0	0	3.3E2	0.319	6398	1892	Sisma Y SLD	0	17.4	0	0	3.3E2	0.319
6399	1893	Sisma X SLV	17.7	0	0	0	325.23	0.319	6400	1893	Sisma Y SLV	0	17.7	0	0	325.23	0.319
6401	1893	Sisma X SLD	17.4	0	0	0	325.23	0.319	6402	1893	Sisma Y SLD	0	17.4	0	0	325.23	0.319
6403	1894	Sisma X SLV	17.7	0	0	0	325.07	0.319	6404	1894	Sisma Y SLV	0	17.7	0	0	325.07	0.319
6405	1894	Sisma X SLD	17.4	0	0	0	325.07	0.319	6406	1894	Sisma Y SLD	0	17.4	0	0	325.07	0.319
6407	1895	Sisma X SLV	17.7	0	0	0	3.2E2	0.319	6408	1895	Sisma Y SLV	0	17.7	0	0	3.2E2	0.319
6409	1895	Sisma X SLD	17.4	0	0	0	3.2E2	0.319	6410	1895	Sisma Y SLD	0	17.4	0	0	3.2E2	0.319
6411	1896	Sisma X SLV	17.7	0	0	0	3.2E2	0.319	6412	1896	Sisma Y SLV	0	17.7	0	0	3.2E2	0.319
6413	1896	Sisma X SLD	17.4	0	0	0	3.2E2	0.319	6414	1896	Sisma Y SLD	0	17.4	0	0	3.2E2	0.319
6415	1897	Sisma X SLV	17.6	0	0	0	3.2E2	0.319	6416	1897	Sisma Y SLV	0	17.6	0	0	3.2E2	0.319
6417	1897	Sisma X SLD	17.3	0	0	0	3.2E2	0.319	6418	1897	Sisma Y SLD	0	17.3	0	0	3.2E2	0.319
6419	1898	Sisma X SLV	17.6	0	0	0	3.2E2	0.319	6420	1898	Sisma Y SLV	0	17.6	0	0	3.2E2	0.319
6421	1898	Sisma X SLD	17.3	0	0	0	3.2E2	0.319	6422	1898	Sisma Y SLD	0	17.3	0	0	3.2E2	0.319
6423	1899	Sisma X SLV	17.6	0	0	0	3.2E2	0.319	6424	1899	Sisma Y SLV	0	17.6	0	0	3.2E2	0.319
6425	1899	Sisma X SLD	17.3	0	0	0	3.2E2	0.319	6426	1899	Sisma Y SLD	0	17.3	0	0	3.2E2	0.319
6427	1900	Sisma X SLV	17.6	0	0	0	3.2E2	0.319	6428	1900	Sisma Y SLV	0	17.6	0	0	3.2E2	0.319
6429	1900	Sisma X SLD	17.4	0	0	0	3.2E2	0.319	6430	1900	Sisma Y SLD	0	17.4	0	0	3.2E2	0.319
6431	1901	Sisma X SLV	17.7	0	0	0	3.2E2	0.319	6432	1901	Sisma Y SLV	0	17.7	0	0	3.2E2	0.319
6433	1901	Sisma X SLD	17.4	0	0	0	3.2E2	0.319	6434	1901	Sisma Y SLD	0	17.4	0	0	3.2E2	0.319
6435	1902	Sisma X SLV	18.8	0	0	0	3.5E2	0.319	6436	1902	Sisma Y SLV	0	18.8	0	0	3.5E2	0.319
6437	1902	Sisma X SLD	18.5	0	0	0	3.5E2	0.319	6438	1902	Sisma Y SLD	0	18.5	0	0	3.5E2	0.319
6439	1903	Sisma X SLV	22.8	0	0	0	4.2E2	0.319	6440	1903	Sisma Y SLV	0	22.8	0	0	4.2E2	0.319
6441	1903	Sisma X SLD	22.5	0	0	0	4.2E2	0.319	6442	1903	Sisma Y SLD	0	22.5	0	0	4.2E2	0.319
6443	1904	Sisma X SLV	23.9	0	0	0	4.4E2	0.319	6444	1904	Sisma Y SLV	0	23.9	0	0	4.4E2	0.319
6445	1904	Sisma X SLD	23.6	0	0	0	4.4E2	0.319	6446	1904	Sisma Y SLD	0	23.6	0	0	4.4E2	0.319
6447	1905	Sisma X SLV	19.4	0	0	0	3.6E2	0.319	6448	1905	Sisma Y SLV	0	19.4	0	0	3.6E2	0.319
6449	1905	Sisma X SLD	19.1	0	0	0	3.6E2	0.319	6450	1905	Sisma Y SLD	0	19.1	0	0	3.6E2	0.319
6451	1906	Sisma X SLV	19.4	0	0	0	3.6E2	0.319	6452	1906	Sisma Y SLV	0	19.4	0	0	3.6E2	0.319
6453	1906	Sisma X SLD	19.1	0	0	0	3.6E2	0.319	6454	1906	Sisma Y SLD	0	19.1	0	0	3.6E2	0.319
6455	1907	Sisma X SLV	19.3	0	0	0	3.5E2	0.319	6456	1907	Sisma Y SLV	0	19.3	0	0	3.5E2	0.319
6457	1907	Sisma X SLD	19	0	0	0	3.5E2	0.319	6458	1907	Sisma Y SLD	0	19	0	0	3.5E2	0.319
6459	1908	Sisma X SLV	19.3	0	0	0	3.5E2	0.319	6460	1908	Sisma Y SLV	0	19.3	0	0	3.5E2	0.319
6461	1908	Sisma X SLD	19	0	0	0	3.5E2	0.319	6462	1908	Sisma Y SLD	0	19	0	0	3.5E2	0.319

muratura

Indice	Nodo	Condizione	Fx	Fy	Fz	Mz	Peso	Gamma	Indice	Nodo	Condizione	Fx	Fy	Fz	Mz	Peso	Gamma
6463	1909	Sisma X SLV	19.1	0	0	0	3.5E2	0.319	6464	1909	Sisma Y SLV	0	19.1	0	0	3.5E2	0.319
6465	1909	Sisma X SLD	18.8	0	0	0	3.5E2	0.319	6466	1909	Sisma Y SLD	0	18.8	0	0	3.5E2	0.319
6467	1910	Sisma X SLV	18.9	0	0	0	3.5E2	0.319	6468	1910	Sisma Y SLV	0	18.9	0	0	3.5E2	0.319
6469	1910	Sisma X SLD	18.6	0	0	0	3.5E2	0.319	6470	1910	Sisma Y SLD	0	18.6	0	0	3.5E2	0.319
6471	1911	Sisma X SLV	18.7	0	0	0	3.4E2	0.319	6472	1911	Sisma Y SLV	0	18.7	0	0	3.4E2	0.319
6473	1911	Sisma X SLD	18.4	0	0	0	3.4E2	0.319	6474	1911	Sisma Y SLD	0	18.4	0	0	3.4E2	0.319
6475	1912	Sisma X SLV	18.6	0	0	0	3.4E2	0.319	6476	1912	Sisma Y SLV	0	18.6	0	0	3.4E2	0.319
6477	1912	Sisma X SLD	18.3	0	0	0	3.4E2	0.319	6478	1912	Sisma Y SLD	0	18.3	0	0	3.4E2	0.319
6479	1913	Sisma X SLV	18.5	0	0	0	3.4E2	0.319	6480	1913	Sisma Y SLV	0	18.5	0	0	3.4E2	0.319
6481	1913	Sisma X SLD	18.2	0	0	0	3.4E2	0.319	6482	1913	Sisma Y SLD	0	18.2	0	0	3.4E2	0.319
6483	1914	Sisma X SLV	18.5	0	0	0	3.4E2	0.319	6484	1914	Sisma Y SLV	0	18.5	0	0	3.4E2	0.319
6485	1914	Sisma X SLD	18.2	0	0	0	3.4E2	0.319	6486	1914	Sisma Y SLD	0	18.2	0	0	3.4E2	0.319
6487	1915	Sisma X SLV	16.1	0	0	0	2.9E2	0.319	6488	1915	Sisma Y SLV	0	16.1	0	0	2.9E2	0.319
6489	1915	Sisma X SLD	15.8	0	0	0	2.9E2	0.319	6490	1915	Sisma Y SLD	0	15.8	0	0	2.9E2	0.319
6491	1916	Sisma X SLV	15	0	0	0	276.13	0.319	6492	1916	Sisma Y SLV	0	15	0	0	276.13	0.319
6493	1916	Sisma X SLD	14.8	0	0	0	276.13	0.319	6494	1916	Sisma Y SLD	0	14.8	0	0	276.13	0.319
6495	1917	Sisma X SLV	25.3	0	0	0	4.6E2	0.319	6496	1917	Sisma Y SLV	0	25.3	0	0	4.6E2	0.319
6497	1917	Sisma X SLD	24.9	0	0	0	4.6E2	0.319	6498	1917	Sisma Y SLD	0	24.9	0	0	4.6E2	0.319
6499	1918	Sisma X SLV	25.5	0	0	0	4.7E2	0.319	6500	1918	Sisma Y SLV	0	25.5	0	0	4.7E2	0.319
6501	1918	Sisma X SLD	25.1	0	0	0	4.7E2	0.319	6502	1918	Sisma Y SLD	0	25.1	0	0	4.7E2	0.319
6503	1919	Sisma X SLV	15.2	0	0	0	2.8E2	0.319	6504	1919	Sisma Y SLV	0	15.2	0	0	2.8E2	0.319
6505	1919	Sisma X SLD	15	0	0	0	2.8E2	0.319	6506	1919	Sisma Y SLD	0	15	0	0	2.8E2	0.319
6507	1920	Sisma X SLV	5	0	0	0	90.37	0.321	6508	1920	Sisma Y SLV	0	5	0	0	90.37	0.321
6509	1920	Sisma X SLD	4.9	0	0	0	90.37	0.321	6510	1920	Sisma Y SLD	0	4.9	0	0	90.37	0.321
6511	1921	Sisma X SLV	8.1	0	0	0	1.5E2	0.322	6512	1921	Sisma Y SLV	0	8.1	0	0	1.5E2	0.322
6513	1921	Sisma X SLD	8	0	0	0	1.5E2	0.322	6514	1921	Sisma Y SLD	0	8	0	0	1.5E2	0.322
6515	1922	Sisma X SLV	8.1	0	0	0	1.5E2	0.322	6516	1922	Sisma Y SLV	0	8.1	0	0	1.5E2	0.322
6517	1922	Sisma X SLD	8	0	0	0	1.5E2	0.322	6518	1922	Sisma Y SLD	0	8	0	0	1.5E2	0.322
6519	1923	Sisma X SLV	15.4	0	0	0	2.8E2	0.322	6520	1923	Sisma Y SLV	0	15.4	0	0	2.8E2	0.322
6521	1923	Sisma X SLD	15.1	0	0	0	2.8E2	0.322	6522	1923	Sisma Y SLD	0	15.1	0	0	2.8E2	0.322
6523	1924	Sisma X SLV	8.9	0	0	0	1.6E2	0.322	6524	1924	Sisma Y SLV	0	8.9	0	0	1.6E2	0.322
6525	1924	Sisma X SLD	8.7	0	0	0	1.6E2	0.322	6526	1924	Sisma Y SLD	0	8.7	0	0	1.6E2	0.322
6527	1925	Sisma X SLV	5.9	0	0	0	1.1E2	0.323	6528	1925	Sisma Y SLV	0	5.9	0	0	1.1E2	0.323
6529	1925	Sisma X SLD	5.8	0	0	0	1.1E2	0.323	6530	1925	Sisma Y SLD	0	5.8	0	0	1.1E2	0.323
6531	1926	Sisma X SLV	8.4	0	0	0	1.5E2	0.323	6532	1926	Sisma Y SLV	0	8.4	0	0	1.5E2	0.323
6533	1926	Sisma X SLD	8.3	0	0	0	1.5E2	0.323	6534	1926	Sisma Y SLD	0	8.3	0	0	1.5E2	0.323
6535	1927	Sisma X SLV	17.7	0	0	0	3.2E2	0.323	6536	1927	Sisma Y SLV	0	17.7	0	0	3.2E2	0.323
6537	1927	Sisma X SLD	17.4	0	0	0	3.2E2	0.323	6538	1927	Sisma Y SLD	0	17.4	0	0	3.2E2	0.323
6539	1928	Sisma X SLV	16.5	0	0	0	3.0E2	0.323	6540	1928	Sisma Y SLV	0	16.5	0	0	3.0E2	0.323
6541	1928	Sisma X SLD	16.2	0	0	0	3.0E2	0.323	6542	1928	Sisma Y SLD	0	16.2	0	0	3.0E2	0.323
6543	1929	Sisma X SLV	8.2	0	0	0	1.5E2	0.324	6544	1929	Sisma Y SLV	0	8.2	0	0	1.5E2	0.324
6545	1929	Sisma X SLD	8	0	0	0	1.5E2	0.324	6546	1929	Sisma Y SLD	0	8	0	0	1.5E2	0.324
6547	1930	Sisma X SLV	8.2	0	0	0	1.5E2	0.324	6548	1930	Sisma Y SLV	0	8.2	0	0	1.5E2	0.324
6549	1930	Sisma X SLD	8	0	0	0	1.5E2	0.324	6550	1930	Sisma Y SLD	0	8	0	0	1.5E2	0.324
6551	1931	Sisma X SLV	19.7	0	0	0	3.6E2	0.324	6552	1931	Sisma Y SLV	0	19.7	0	0	3.6E2	0.324
6553	1931	Sisma X SLD	19.3	0	0	0	3.6E2	0.324	6554	1931	Sisma Y SLD	0	19.3	0	0	3.6E2	0.324
6555	1932	Sisma X SLV	15.5	0	0	0	2.8E2	0.324	6556	1932	Sisma Y SLV	0	15.5	0	0	2.8E2	0.324
6557	1932	Sisma X SLD	15.2	0	0	0	2.8E2	0.324	6558	1932	Sisma Y SLD	0	15.2	0	0	2.8E2	0.324
6559	1933	Sisma X SLV	9	0	0	0	1.6E2	0.325	6560	1933	Sisma Y SLV	0	9	0	0	1.6E2	0.325
6561	1933	Sisma X SLD	8.8	0	0	0	1.6E2	0.325	6562	1933	Sisma Y SLD	0	8.8	0	0	1.6E2	0.325
6563	1934	Sisma X SLV	17.5	0	0	0	3.1E2	0.326	6564	1934	Sisma Y SLV	0	17.5	0	0	3.1E2	0.326
6565	1934	Sisma X SLD	17.2	0	0	0	3.1E2	0.326	6566	1934	Sisma Y SLD	0	17.2	0	0	3.1E2	0.326
6567	1935	Sisma X SLV	9.3	0	0	0	1.7E2	0.326	6568	1935	Sisma Y SLV	0	9.3	0	0	1.7E2	0.326
6569	1935	Sisma X SLD	9.2	0	0	0	1.7E2	0.326	6570	1935	Sisma Y SLD	0	9.2	0	0	1.7E2	0.326
6571	1936	Sisma X SLV	8.2	0	0	0	1.5E2	0.327	6572	1936	Sisma Y SLV	0	8.2	0	0	1.5E2	0.327
6573	1936	Sisma X SLD	8.1	0	0	0	1.5E2	0.327	6574	1936	Sisma Y SLD	0	8.1	0	0	1.5E2	0.327
6575	1937	Sisma X SLV	8.2	0	0	0	1.5E2	0.327	6576	1937	Sisma Y SLV	0	8.2	0	0	1.5E2	0.327
6577	1937	Sisma X SLD	8.1	0	0	0	1.5E2	0.327	6578	1937	Sisma Y SLD	0	8.1	0	0	1.5E2	0.327
6579	1938	Sisma X SLV	6.4	0	0	0	1.1E2	0.327	6580	1938	Sisma Y SLV	0	6.4	0	0	1.1E2	0.327
6581	1938	Sisma X SLD	6.3	0	0	0	1.1E2	0.327	6582	1938	Sisma Y SLD	0	6.3	0	0	1.1E2	0.327
6583	1939	Sisma X SLV	8.5	0	0	0	1.5E2	0.327	6584	1939	Sisma Y SLV	0	8.5	0	0	1.5E2	0.327
6585	1939	Sisma X SLD	8.4	0	0	0	1.5E2	0.327	6586	1939	Sisma Y SLD	0	8.4	0	0	1.5E2	0.327
6587	1940	Sisma X SLV	17.9	0	0	0	320.49	0.327	6588	1940	Sisma Y SLV	0	17.9	0	0	320.49	0.327
6589	1940	Sisma X SLD	17.6	0	0	0	320.49	0.327	6590	1940	Sisma Y SLD	0	17.6	0	0	320.49	0.327
6591	1941	Sisma X SLV	16.5	0	0	0	3.0E2	0.327	6592	1941	Sisma Y SLV	0	16.5	0	0	3.0E2	0.327
6593	1941	Sisma X SLD	16.2	0	0	0	3.0E2	0.327	6594	1941	Sisma Y SLD	0	16.2	0	0	3.0E2	0.327
6595	1942	Sisma X SLV	15.6	0	0	0	279.47	0.327	6596	1942	Sisma Y SLV	0	15.6	0	0	279.47	0.327
6597	1942	Sisma X SLD	15.3	0	0	0	279.47	0.327	6598	1942	Sisma Y SLD	0	15.3	0	0	279.47	0.327
6599	1943	Sisma X SLV	16.1	0	0	0	2.9E2	0.328	6600	1943	Sisma Y SLV	0	16.1	0	0	2.9E2	0.328
6601	1943	Sisma X SLD	15.8	0	0	0	2.9E2	0.328	6602	1943	Sisma Y SLD	0	15.8	0	0	2.9E2	0.328
6603	1944	Sisma X SLV	9	0	0	0	1.6E2	0.329	6604	1944	Sisma Y SLV	0	9	0	0	1.6E2	0.329
6605	1944	Sisma X SLD	8.9	0	0	0	1.6E2	0.329	6606	1944	Sisma Y SLD	0	8.9	0	0	1.6E2	0.329
6607	1945	Sisma X SLV	20.1	0	0	0	3.6E2	0.329	6608	1945	Sisma Y SLV	0	20.1	0	0	3.6E2	0.329
6609	1945	Sisma X SLD	19.8	0	0	0	3.6E2	0.329	6610	1945	Sisma Y SLD	0	19.8	0	0	3.6E2	0.329
6611	1946	Sisma X SLV	8.3	0	0	0	1.5E2	0.33	6612	1946	Sisma Y SLV	0	8.3	0	0	1.5E2	0.33
6613	1946	Sisma X SLD	8.2	0	0	0	1.5E2	0.33	6614	1946	Sisma Y SLD	0	8.2	0	0	1.5E2	0.33
6615	1947	Sisma X SLV	8.3	0	0	0	1.5E2	0.33	6616	1947	Sisma Y SLV	0	8.3	0	0	1.5E2	0.33
6617	1947	Sisma X SLD	8.2	0	0	0	1.5E2	0.33	6618	1947	Sisma Y SLD	0	8.2	0	0	1.5E2	0.33
6619	1948	Sisma X SLV	15.7	0	0	0	2.8E2	0.33	6620	1948	Sisma Y SLV	0	15.7	0	0	2.8E2	0.33
6621	1948	Sisma X SLD	15.5	0	0	0	2.8E2	0.33	6622	1948	Sisma Y SLD	0	15.5	0	0	2.8E2	0.33
6623	1949	Sisma X SLV	8.6	0	0	0	1.5E2	0.331	6624	1949	Sisma Y SLV	0	8.6	0	0	1.5E2	0.331
6625	1949	Sisma X SLD	8.5	0	0	0	1.5E2	0.331	6626	1949	Sisma Y SLD	0	8.5	0	0	1.5E2	0.331
6627	1950	Sisma X SLV	18.1	0	0	0	3.2E2	0.331	6628	1950	Sisma Y SLV	0	18.1	0	0	3.2E2	0.331
6629	1950	Sisma X SLD	17.8	0	0	0	3.2E2	0.331	6630	1950	Sisma Y SLD	0	17.8	0	0	3.2E2	0.331
6631	1951	Sisma X SLV	6.8	0	0	0	1.2E2	0.331	6632	1951	Sisma Y SLV	0	6.8	0	0	1.2E2	0.331
6633	1951	Sisma X SLD	6.7	0	0	0	1.2E2	0.331	6634	1951	Sisma Y SLD	0	6.7	0	0	1.2E2	0.331
6635	1952	Sisma X SLV	16.5	0	0	0	2.9E2	0.331	6636	1952	Sisma Y SLV	0	16.5	0	0	2.9E2	0.331
6637	1952	Sisma X SLD	16.2	0	0	0	2.9E2	0.331	6638	1952	Sisma Y SLD	0	16.2	0	0	2.9E2	0.331
6639	1953	Sisma X SLV	9.2	0	0	0	1.6E2	0.333	6640	1953	Sisma Y SLV	0	9.2	0	0	1.6E2	0.333
6641	1953	Sisma X SLD	9	0	0	0	1.6E2	0.333	6642	1953	Sisma Y SLD	0	9	0	0	1.6E2	0.333
6643	1954	Sisma X SLV	18	0	0	0	3.2E2	0.333	6644	1954	Sisma Y SLV	0	18	0	0	3.2E2	0.333
6645	1954	Sisma X SLD	17.7	0	0	0	3.2E2	0.333	6646	1954	Sisma Y SLD	0	17.7	0	0	3.2E2	0.333
6647	1955	Sisma X SLV	9.5	0	0	0	1.7E2	0.333	6648	1955	Sisma Y SLV	0	9.5	0	0	1.7E2	0.333
6649	1955	Sisma X SLD	9.4	0	0	0	1.7E2	0.333	6650	1955	Sisma Y SLD	0	9.4	0	0	1.7E2	0.333
6651	1956	Sisma X SLV	7.2	0	0	0	1.3E2	0.333	6652	1956	Sisma Y SLV	0	7.2	0	0	1.3E2	0.333
6653	1956	Sisma X SLD	7	0	0	0	1.3E2	0.333	6654	1956	Sisma Y SLD	0	7	0	0	1.3E2	0.333
6655	1957	Sisma X SLV	8.4	0	0	0	1.5E2	0.333	6656	1957	Sisma Y SLV	0	8.4	0	0	1.5E2	0.333
6657	1957	Sisma X SLD	8.3	0	0	0	1.5E2	0.333	6658	1957	Sisma Y SLD	0	8.3	0	0	1.5E2	0.333
6659	1958	Sisma X SLV	8.4	0	0	0	1.5E2	0.333	6660	1958	Sisma Y SLV	0	8.4	0	0	1.5E2	0.333
6661	1958	Sisma X SLD	8.3	0	0	0	1.5E2	0.333	6662	1958	Sisma Y SLD	0	8.3	0	0	1.5E2	0.333
6663	1959	Sisma X SLV	5.3	0	0	0	93.444	0.334	6664	1959	Sisma Y SLV	0	5.3	0	0	93.444	0.334

Indice	Nodo	Condizione	Fx	Fy	Fz	Mz	Peso	Gamma	Indice	Nodo	Condizione	Fx	Fy	Fz	Mz	Peso	Gamma
6665	1959	Sisma X SLD	5.2	0	0	0	93.444	0.334	6666	1959	Sisma Y SLD	0	5.2	0	0	93.444	0.334
6667	1960	Sisma X SLV	15.9	0	0	0	2.8E2	0.334	6668	1960	Sisma Y SLV	0	15.9	0	0	2.8E2	0.334
6669	1960	Sisma X SLD	15.7	0	0	0	2.8E2	0.334	6670	1960	Sisma Y SLD	0	15.7	0	0	2.8E2	0.334
6671	1961	Sisma X SLV	20.8	0	0	0	3.6E2	0.335	6672	1961	Sisma Y SLV	0	20.8	0	0	3.6E2	0.335
6673	1961	Sisma X SLD	20.4	0	0	0	3.6E2	0.335	6674	1961	Sisma Y SLD	0	20.4	0	0	3.6E2	0.335
6675	1962	Sisma X SLV	8.7	0	0	0	1.5E2	0.336	6676	1962	Sisma Y SLV	0	8.7	0	0	1.5E2	0.336
6677	1962	Sisma X SLD	8.5	0	0	0	1.5E2	0.336	6678	1962	Sisma Y SLD	0	8.5	0	0	1.5E2	0.336
6679	1963	Sisma X SLV	8.7	0	0	0	1.5E2	0.336	6680	1963	Sisma Y SLV	0	8.7	0	0	1.5E2	0.336
6681	1963	Sisma X SLD	8.5	0	0	0	1.5E2	0.336	6682	1963	Sisma Y SLD	0	8.5	0	0	1.5E2	0.336
6683	1964	Sisma X SLV	8.8	0	0	0	1.5E2	0.337	6684	1964	Sisma Y SLV	0	8.8	0	0	1.5E2	0.337
6685	1964	Sisma X SLD	8.7	0	0	0	1.5E2	0.337	6686	1964	Sisma Y SLD	0	8.7	0	0	1.5E2	0.337
6687	1965	Sisma X SLV	18.5	0	0	0	3.2E2	0.337	6688	1965	Sisma Y SLV	0	18.5	0	0	3.2E2	0.337
6689	1965	Sisma X SLD	18.2	0	0	0	3.2E2	0.337	6690	1965	Sisma Y SLD	0	18.2	0	0	3.2E2	0.337
6691	1966	Sisma X SLV	16.5	0	0	0	2.9E2	0.337	6692	1966	Sisma Y SLV	0	16.5	0	0	2.9E2	0.337
6693	1966	Sisma X SLD	16.3	0	0	0	2.9E2	0.337	6694	1966	Sisma Y SLD	0	16.3	0	0	2.9E2	0.337
6695	1967	Sisma X SLV	7.3	0	0	0	126.18	0.337	6696	1967	Sisma Y SLV	0	7.3	0	0	126.18	0.337
6697	1967	Sisma X SLD	7.1	0	0	0	126.18	0.337	6698	1967	Sisma Y SLD	0	7.1	0	0	126.18	0.337
6699	1968	Sisma X SLV	9.3	0	0	0	1.6E2	0.338	6700	1968	Sisma Y SLV	0	9.3	0	0	1.6E2	0.338
6701	1968	Sisma X SLD	9.2	0	0	0	1.6E2	0.338	6702	1968	Sisma Y SLD	0	9.2	0	0	1.6E2	0.338
6703	1969	Sisma X SLV	8.5	0	0	0	1.5E2	0.338	6704	1969	Sisma Y SLV	0	8.5	0	0	1.5E2	0.338
6705	1969	Sisma X SLD	8.4	0	0	0	1.5E2	0.338	6706	1969	Sisma Y SLD	0	8.4	0	0	1.5E2	0.338
6707	1970	Sisma X SLV	8.5	0	0	0	1.5E2	0.338	6708	1970	Sisma Y SLV	0	8.5	0	0	1.5E2	0.338
6709	1970	Sisma X SLD	8.4	0	0	0	1.5E2	0.338	6710	1970	Sisma Y SLD	0	8.4	0	0	1.5E2	0.338
6711	1971	Sisma X SLV	16.2	0	0	0	2.8E2	0.339	6712	1971	Sisma Y SLV	0	16.2	0	0	2.8E2	0.339
6713	1971	Sisma X SLD	15.9	0	0	0	2.8E2	0.339	6714	1971	Sisma Y SLD	0	15.9	0	0	2.8E2	0.339
6715	1972	Sisma X SLV	16.8	0	0	0	2.9E2	0.339	6716	1972	Sisma Y SLV	0	16.8	0	0	2.9E2	0.339
6717	1972	Sisma X SLD	16.5	0	0	0	2.9E2	0.339	6718	1972	Sisma Y SLD	0	16.5	0	0	2.9E2	0.339
6719	1973	Sisma X SLV	18.7	0	0	0	3.2E2	0.341	6720	1973	Sisma Y SLV	0	18.7	0	0	3.2E2	0.341
6721	1973	Sisma X SLD	18.4	0	0	0	3.2E2	0.341	6722	1973	Sisma Y SLD	0	18.4	0	0	3.2E2	0.341
6723	1974	Sisma X SLV	9.9	0	0	0	1.7E2	0.341	6724	1974	Sisma Y SLV	0	9.9	0	0	1.7E2	0.341
6725	1974	Sisma X SLD	9.8	0	0	0	1.7E2	0.341	6726	1974	Sisma Y SLD	0	9.8	0	0	1.7E2	0.341
6727	1975	Sisma X SLV	22.1	0	0	0	379.47	0.342	6728	1975	Sisma Y SLV	0	22.1	0	0	379.47	0.342
6729	1975	Sisma X SLD	21.8	0	0	0	379.47	0.342	6730	1975	Sisma Y SLD	0	21.8	0	0	379.47	0.342
6731	1976	Sisma X SLV	24.5	0	0	0	4.2E2	0.342	6732	1976	Sisma Y SLV	0	24.5	0	0	4.2E2	0.342
6733	1976	Sisma X SLD	24.1	0	0	0	4.2E2	0.342	6734	1976	Sisma Y SLD	0	24.1	0	0	4.2E2	0.342
6735	1977	Sisma X SLV	24.6	0	0	0	4.2E2	0.342	6736	1977	Sisma Y SLV	0	24.6	0	0	4.2E2	0.342
6737	1977	Sisma X SLD	24.2	0	0	0	4.2E2	0.342	6738	1977	Sisma Y SLD	0	24.2	0	0	4.2E2	0.342
6739	1978	Sisma X SLV	16.8	0	0	0	2.9E2	0.342	6740	1978	Sisma Y SLV	0	16.8	0	0	2.9E2	0.342
6741	1978	Sisma X SLD	16.6	0	0	0	2.9E2	0.342	6742	1978	Sisma Y SLD	0	16.6	0	0	2.9E2	0.342
6743	1979	Sisma X SLV	5.9	0	0	0	100.84	0.342	6744	1979	Sisma Y SLV	0	5.9	0	0	100.84	0.342
6745	1979	Sisma X SLD	5.8	0	0	0	100.84	0.342	6746	1979	Sisma Y SLD	0	5.8	0	0	100.84	0.342
6747	1980	Sisma X SLV	21.8	0	0	0	3.7E2	0.343	6748	1980	Sisma Y SLV	0	21.8	0	0	3.7E2	0.343
6749	1980	Sisma X SLD	21.5	0	0	0	3.7E2	0.343	6750	1980	Sisma Y SLD	0	21.5	0	0	3.7E2	0.343
6751	1981	Sisma X SLV	5.6	0	0	0	96.221	0.344	6752	1981	Sisma Y SLV	0	5.6	0	0	96.221	0.344
6753	1981	Sisma X SLD	5.6	0	0	0	96.221	0.344	6754	1981	Sisma Y SLD	0	5.6	0	0	96.221	0.344
6755	1982	Sisma X SLV	19	0	0	0	3.2E2	0.344	6756	1982	Sisma Y SLV	0	19	0	0	3.2E2	0.344
6757	1982	Sisma X SLD	18.7	0	0	0	3.2E2	0.344	6758	1982	Sisma Y SLD	0	18.7	0	0	3.2E2	0.344
6759	1983	Sisma X SLV	9.1	0	0	0	1.5E2	0.344	6760	1983	Sisma Y SLV	0	9.1	0	0	1.5E2	0.344
6761	1983	Sisma X SLD	8.9	0	0	0	1.5E2	0.344	6762	1983	Sisma Y SLD	0	8.9	0	0	1.5E2	0.344
6763	1984	Sisma X SLV	16.7	0	0	0	2.8E2	0.344	6764	1984	Sisma Y SLV	0	16.7	0	0	2.8E2	0.344
6765	1984	Sisma X SLD	16.4	0	0	0	2.8E2	0.344	6766	1984	Sisma Y SLD	0	16.4	0	0	2.8E2	0.344
6767	1985	Sisma X SLV	8.8	0	0	0	1.5E2	0.345	6768	1985	Sisma Y SLV	0	8.8	0	0	1.5E2	0.345
6769	1985	Sisma X SLD	8.6	0	0	0	1.5E2	0.345	6770	1985	Sisma Y SLD	0	8.6	0	0	1.5E2	0.345
6771	1986	Sisma X SLV	8.8	0	0	0	1.5E2	0.345	6772	1986	Sisma Y SLV	0	8.8	0	0	1.5E2	0.345
6773	1986	Sisma X SLD	8.6	0	0	0	1.5E2	0.345	6774	1986	Sisma Y SLD	0	8.6	0	0	1.5E2	0.345
6775	1987	Sisma X SLV	9.7	0	0	0	1.6E2	0.345	6776	1987	Sisma Y SLV	0	9.7	0	0	1.6E2	0.345
6777	1987	Sisma X SLD	9.5	0	0	0	1.6E2	0.345	6778	1987	Sisma Y SLD	0	9.5	0	0	1.6E2	0.345
6779	1988	Sisma X SLV	16.7	0	0	0	2.8E2	0.345	6780	1988	Sisma Y SLV	0	16.7	0	0	2.8E2	0.345
6781	1988	Sisma X SLD	16.4	0	0	0	2.8E2	0.345	6782	1988	Sisma Y SLD	0	16.4	0	0	2.8E2	0.345
6783	1989	Sisma X SLV	8.2	0	0	0	1.4E2	0.347	6784	1989	Sisma Y SLV	0	8.2	0	0	1.4E2	0.347
6785	1989	Sisma X SLD	8	0	0	0	1.4E2	0.347	6786	1989	Sisma Y SLD	0	8	0	0	1.4E2	0.347
6787	1990	Sisma X SLV	7.7	0	0	0	1.3E2	0.348	6788	1990	Sisma Y SLV	0	7.7	0	0	1.3E2	0.348
6789	1990	Sisma X SLD	7.6	0	0	0	1.3E2	0.348	6790	1990	Sisma Y SLD	0	7.6	0	0	1.3E2	0.348
6791	1991	Sisma X SLV	5.7	0	0	0	95.018	0.349	6792	1991	Sisma Y SLV	0	5.7	0	0	95.018	0.349
6793	1991	Sisma X SLD	5.6	0	0	0	95.018	0.349	6794	1991	Sisma Y SLD	0	5.6	0	0	95.018	0.349
6795	1992	Sisma X SLV	18.1	0	0	0	301.52	0.351	6796	1992	Sisma Y SLV	0	18.1	0	0	301.52	0.351
6797	1992	Sisma X SLD	17.8	0	0	0	301.52	0.351	6798	1992	Sisma Y SLD	0	17.8	0	0	301.52	0.351
6799	1993	Sisma X SLV	20.2	0	0	0	3.4E2	0.352	6800	1993	Sisma Y SLV	0	20.2	0	0	3.4E2	0.352
6801	1993	Sisma X SLD	19.9	0	0	0	3.4E2	0.352	6802	1993	Sisma Y SLD	0	19.9	0	0	3.4E2	0.352
6803	1994	Sisma X SLV	10.6	0	0	0	1.8E2	0.352	6804	1994	Sisma Y SLV	0	10.6	0	0	1.8E2	0.352
6805	1994	Sisma X SLD	10.5	0	0	0	1.8E2	0.352	6806	1994	Sisma Y SLD	0	10.5	0	0	1.8E2	0.352
6807	1995	Sisma X SLV	23.9	0	0	0	4.0E2	0.353	6808	1995	Sisma Y SLV	0	23.9	0	0	4.0E2	0.353
6809	1995	Sisma X SLD	23.5	0	0	0	4.0E2	0.353	6810	1995	Sisma Y SLD	0	23.5	0	0	4.0E2	0.353
6811	1996	Sisma X SLV	20.1	0	0	0	3.3E2	0.353	6812	1996	Sisma Y SLV	0	20.1	0	0	3.3E2	0.353
6813	1996	Sisma X SLD	19.8	0	0	0	3.3E2	0.353	6814	1996	Sisma Y SLD	0	19.8	0	0	3.3E2	0.353
6815	1997	Sisma X SLV	9.7	0	0	0	1.6E2	0.353	6816	1997	Sisma Y SLV	0	9.7	0	0	1.6E2	0.353
6817	1997	Sisma X SLD	9.6	0	0	0	1.6E2	0.353	6818	1997	Sisma Y SLD	0	9.6	0	0	1.6E2	0.353
6819	1998	Sisma X SLV	17.4	0	0	0	2.9E2	0.354	6820	1998	Sisma Y SLV	0	17.4	0	0	2.9E2	0.354
6821	1998	Sisma X SLD	17.1	0	0	0	2.9E2	0.354	6822	1998	Sisma Y SLD	0	17.1	0	0	2.9E2	0.354
6823	1999	Sisma X SLV	9.3	0	0	0	1.5E2	0.354	6824	1999	Sisma Y SLV	0	9.3	0	0	1.5E2	0.354
6825	1999	Sisma X SLD	9.2	0	0	0	1.5E2	0.354	6826	1999	Sisma Y SLD	0	9.2	0	0	1.5E2	0.354
6827	2000	Sisma X SLV	9.3	0	0	0	1.5E2	0.354	6828	2000	Sisma Y SLV	0	9.3	0	0	1.5E2	0.354
6829	2000	Sisma X SLD	9.2	0	0	0	1.5E2	0.354	6830	2000	Sisma Y SLD	0	9.2	0	0	1.5E2	0.354
6831	2001	Sisma X SLV	10.3	0	0	0	1.7E2	0.354	6832	2001	Sisma Y SLV	0	10.3	0	0	1.7E2	0.354
6833	2001	Sisma X SLD	10.1	0	0	0	1.7E2	0.354	6834	2001	Sisma Y SLD	0	10.1	0	0	1.7E2	0.354
6835	2002	Sisma X SLV	17.6	0	0	0	2.9E2	0.354	6836	2002	Sisma Y SLV	0	17.6	0	0	2.9E2	0.354
6837	2002	Sisma X SLD	17.4	0	0	0	2.9E2	0.354	6838	2002	Sisma Y SLD	0	17.4	0	0	2.9E2	0.354
6839	2003	Sisma X SLV	11.1	0	0	0	1.8E2	0.363	6840	2003	Sisma Y SLV	0	11.1	0	0	1.8E2	0.363
6841	2003	Sisma X SLD	10.9	0	0	0	1.8E2	0.363	6842	2003	Sisma Y SLD	0	10.9	0	0	1.8E2	0.363
6843	2004	Sisma X SLV	13	0	0	0	2.1E2	0.364	6844	2004	Sisma Y SLV	0	13	0	0	2.1E2	0.364
6845	2004	Sisma X SLD	12.8	0	0	0	2.1E2	0.364	6846	2004	Sisma Y SLD	0	12.8	0	0	2.1E2	0.364
6847	2005	Sisma X SLV	7.7	0	0	0	1.2E2	0.364	6848	2005	Sisma Y SLV	0	7.7	0	0	1.2E2	0.364
6849	2005	Sisma X SLD	7.6	0	0	0	1.2E2	0.364	6850	2005	Sisma Y SLD	0	7.6	0	0	1.2E2	0.364
6851	2006	Sisma X SLV	12.1	0	0	0	1.9E2	0.366	6852	2006	Sisma Y SLV	0	12.1	0	0	1.9E2	0.366
6853	2006	Sisma X SLD	11.9	0	0	0	1.9E2	0.366	6854	2006	Sisma Y SLD	0	11.9	0	0	1.9E2	0.366
6855	2007	Sisma X SLV	9.5	0	0	0	1.5E2	0.366	6856	2007	Sisma Y SLV	0	9.5	0	0	1.5E2	0.366
6857	2007	Sisma X SLD	9.3	0	0	0	1.5E2	0.366	6858	2007	Sisma Y SLD	0	9.3	0	0	1.5E2	0.366
6859	2008	Sisma X SLV	3.1	0	0	0	49.675	0.366	6860	2008	Sisma Y SLV	0	3.1	0	0	49.675	0.366
6861	2008	Sisma X SLD	3.1	0	0	0	49.675	0.366	6862	2008	Sisma Y SLD	0	3.1	0	0	49.675	0.366
6863	2009	Sisma X SLV	4.4	0	0	0	71.116	0.366	6864	2009	Sisma Y SLV	0	4.4	0	0	71.116	0.366
6865	2009	Sisma X SLD	4.4	0	0	0	71.116	0.366	6866	2009	Sisma Y SLD	0	4.4	0	0	71.116	0.366
6867	2010	Sisma X SLV	5.6	0	0	0	89.319	0.366	6868	2010	Sisma Y SLV	0	5.6	0	0	89.319	0.366
6869	2010	Sisma X SLD	5.5	0	0	0	89.319	0.366	6870	2010	Sisma Y SLD	0	5.5	0	0	89.319	0.366
6871	2011	Sisma X SLV	5.1	0	0	0	81.407	0.366	6872	2011	Sisma Y SLV	0	5.1	0	0	81.407	0.366

Indice	Nodo	Condizione	Fx	Fy	Fz	Mz	Peso	Gamma	Indice	Nodo	Condizione	Fx	Fy	Fz	Mz	Peso	Gamma
6873	2011	Sisma X SLD	5	0	0	0	81.407	0.366	6874	2011	Sisma Y SLD	0	5	0	0	81.407	0.366
6875	2012	Sisma X SLV	5	0	0	0	80.566	0.366	6876	2012	Sisma Y SLV	0	5	0	0	80.566	0.366
6877	2012	Sisma X SLD	5	0	0	0	80.566	0.366	6878	2012	Sisma Y SLD	0	5	0	0	80.566	0.366
6879	2013	Sisma X SLV	4.9	0	0	0	79.246	0.366	6880	2013	Sisma Y SLV	0	4.9	0	0	79.246	0.366
6881	2013	Sisma X SLD	4.9	0	0	0	79.246	0.366	6882	2013	Sisma Y SLD	0	4.9	0	0	79.246	0.366
6883	2014	Sisma X SLV	13.8	0	0	0	221.55	0.366	6884	2014	Sisma Y SLV	0	13.8	0	0	221.55	0.366
6885	2014	Sisma X SLD	13.6	0	0	0	221.55	0.366	6886	2014	Sisma Y SLD	0	13.6	0	0	221.55	0.366
6887	2015	Sisma X SLV	7	0	0	0	1.1E2	0.366	6888	2015	Sisma Y SLV	0	7	0	0	1.1E2	0.366
6889	2015	Sisma X SLD	6.9	0	0	0	1.1E2	0.366	6890	2015	Sisma Y SLD	0	6.9	0	0	1.1E2	0.366
6891	2016	Sisma X SLV	10.8	0	0	0	1.7E2	0.366	6892	2016	Sisma Y SLV	0	10.8	0	0	1.7E2	0.366
6893	2016	Sisma X SLD	10.6	0	0	0	1.7E2	0.366	6894	2016	Sisma Y SLD	0	10.6	0	0	1.7E2	0.366
6895	2017	Sisma X SLV	4.2	0	0	0	66.559	0.366	6896	2017	Sisma Y SLV	0	4.2	0	0	66.559	0.366
6897	2017	Sisma X SLD	4.1	0	0	0	66.559	0.366	6898	2017	Sisma Y SLD	0	4.1	0	0	66.559	0.366
6899	2018	Sisma X SLV	5.5	0	0	0	88.196	0.366	6900	2018	Sisma Y SLV	0	5.5	0	0	88.196	0.366
6901	2018	Sisma X SLD	5.4	0	0	0	88.196	0.366	6902	2018	Sisma Y SLD	0	5.4	0	0	88.196	0.366
6903	2019	Sisma X SLV	5	0	0	0	80.566	0.366	6904	2019	Sisma Y SLV	0	5	0	0	80.566	0.366
6905	2019	Sisma X SLD	5	0	0	0	80.566	0.366	6906	2019	Sisma Y SLD	0	5	0	0	80.566	0.366
6907	2020	Sisma X SLV	4.9	0	0	0	79.246	0.366	6908	2020	Sisma Y SLV	0	4.9	0	0	79.246	0.366
6909	2020	Sisma X SLD	4.9	0	0	0	79.246	0.366	6910	2020	Sisma Y SLD	0	4.9	0	0	79.246	0.366
6911	2021	Sisma X SLV	13.4	0	0	0	2.1E2	0.366	6912	2021	Sisma Y SLV	0	13.4	0	0	2.1E2	0.366
6913	2021	Sisma X SLD	13.2	0	0	0	2.1E2	0.366	6914	2021	Sisma Y SLD	0	13.2	0	0	2.1E2	0.366
6915	2022	Sisma X SLV	12.6	0	0	0	2.0E2	0.366	6916	2022	Sisma Y SLV	0	12.6	0	0	2.0E2	0.366
6917	2022	Sisma X SLD	12.4	0	0	0	2.0E2	0.366	6918	2022	Sisma Y SLD	0	12.4	0	0	2.0E2	0.366
6919	2023	Sisma X SLV	10.7	0	0	0	1.7E2	0.366	6920	2023	Sisma Y SLV	0	10.7	0	0	1.7E2	0.366
6921	2023	Sisma X SLD	10.5	0	0	0	1.7E2	0.366	6922	2023	Sisma Y SLD	0	10.5	0	0	1.7E2	0.366
6923	2024	Sisma X SLV	9	0	0	0	1.4E2	0.366	6924	2024	Sisma Y SLV	0	9	0	0	1.4E2	0.366
6925	2024	Sisma X SLD	8.9	0	0	0	1.4E2	0.366	6926	2024	Sisma Y SLD	0	8.9	0	0	1.4E2	0.366
6927	2025	Sisma X SLV	9.5	0	0	0	1.5E2	0.366	6928	2025	Sisma Y SLV	0	9.5	0	0	1.5E2	0.366
6929	2025	Sisma X SLD	9.4	0	0	0	1.5E2	0.366	6930	2025	Sisma Y SLD	0	9.4	0	0	1.5E2	0.366
6931	2026	Sisma X SLV	9.4	0	0	0	150.44	0.366	6932	2026	Sisma Y SLV	0	9.4	0	0	150.44	0.366
6933	2026	Sisma X SLD	9.2	0	0	0	150.44	0.366	6934	2026	Sisma Y SLD	0	9.2	0	0	150.44	0.366
6935	2027	Sisma X SLV	11.2	0	0	0	1.8E2	0.369	6936	2027	Sisma Y SLV	0	11.2	0	0	1.8E2	0.369
6937	2027	Sisma X SLD	11	0	0	0	1.8E2	0.369	6938	2027	Sisma Y SLD	0	11	0	0	1.8E2	0.369
6939	2028	Sisma X SLV	10.5	0	0	0	1.7E2	0.369	6940	2028	Sisma Y SLV	0	10.5	0	0	1.7E2	0.369
6941	2028	Sisma X SLD	10.3	0	0	0	1.7E2	0.369	6942	2028	Sisma Y SLD	0	10.3	0	0	1.7E2	0.369
6943	2029	Sisma X SLV	6.9	0	0	0	108.1	0.375	6944	2029	Sisma Y SLV	0	6.9	0	0	108.1	0.375
6945	2029	Sisma X SLD	6.8	0	0	0	108.1	0.375	6946	2029	Sisma Y SLD	0	6.8	0	0	108.1	0.375
6947	2030	Sisma X SLV	10.8	0	0	0	1.7E2	0.375	6948	2030	Sisma Y SLV	0	10.8	0	0	1.7E2	0.375
6949	2030	Sisma X SLD	10.6	0	0	0	1.7E2	0.375	6950	2030	Sisma Y SLD	0	10.6	0	0	1.7E2	0.375
6951	2031	Sisma X SLV	9.1	0	0	0	1.4E2	0.375	6952	2031	Sisma Y SLV	0	9.1	0	0	1.4E2	0.375
6953	2031	Sisma X SLD	8.9	0	0	0	1.4E2	0.375	6954	2031	Sisma Y SLD	0	8.9	0	0	1.4E2	0.375
6955	2032	Sisma X SLV	9.1	0	0	0	1.4E2	0.375	6956	2032	Sisma Y SLV	0	9.1	0	0	1.4E2	0.375
6957	2032	Sisma X SLD	9	0	0	0	1.4E2	0.375	6958	2032	Sisma Y SLD	0	9	0	0	1.4E2	0.375
6959	2033	Sisma X SLV	8.7	0	0	0	1.4E2	0.375	6960	2033	Sisma Y SLV	0	8.7	0	0	1.4E2	0.375
6961	2033	Sisma X SLD	8.5	0	0	0	1.4E2	0.375	6962	2033	Sisma Y SLD	0	8.5	0	0	1.4E2	0.375
6963	2034	Sisma X SLV	8.7	0	0	0	1.4E2	0.375	6964	2034	Sisma Y SLV	0	8.7	0	0	1.4E2	0.375
6965	2034	Sisma X SLD	8.6	0	0	0	1.4E2	0.375	6966	2034	Sisma Y SLD	0	8.6	0	0	1.4E2	0.375
6967	2035	Sisma X SLV	6.9	0	0	0	1.1E2	0.375	6968	2035	Sisma Y SLV	0	6.9	0	0	1.1E2	0.375
6969	2035	Sisma X SLD	6.8	0	0	0	1.1E2	0.375	6970	2035	Sisma Y SLD	0	6.8	0	0	1.1E2	0.375
6971	2036	Sisma X SLV	10.4	0	0	0	1.6E2	0.375	6972	2036	Sisma Y SLV	0	10.4	0	0	1.6E2	0.375
6973	2036	Sisma X SLD	10.3	0	0	0	1.6E2	0.375	6974	2036	Sisma Y SLD	0	10.3	0	0	1.6E2	0.375
6975	2037	Sisma X SLV	21.7	0	0	0	3.4E2	0.375	6976	2037	Sisma Y SLV	0	21.7	0	0	3.4E2	0.375
6977	2037	Sisma X SLD	21.4	0	0	0	3.4E2	0.375	6978	2037	Sisma Y SLD	0	21.4	0	0	3.4E2	0.375
6979	2038	Sisma X SLV	20.2	0	0	0	3.1E2	0.375	6980	2038	Sisma Y SLV	0	20.2	0	0	3.1E2	0.375
6981	2038	Sisma X SLD	19.8	0	0	0	3.1E2	0.375	6982	2038	Sisma Y SLD	0	19.8	0	0	3.1E2	0.375
6983	2039	Sisma X SLV	13.5	0	0	0	2.1E2	0.375	6984	2039	Sisma Y SLV	0	13.5	0	0	2.1E2	0.375
6985	2039	Sisma X SLD	13.3	0	0	0	2.1E2	0.375	6986	2039	Sisma Y SLD	0	13.3	0	0	2.1E2	0.375
6987	2040	Sisma X SLV	10.1	0	0	0	1.6E2	0.375	6988	2040	Sisma Y SLV	0	10.1	0	0	1.6E2	0.375
6989	2040	Sisma X SLD	9.9	0	0	0	1.6E2	0.375	6990	2040	Sisma Y SLD	0	9.9	0	0	1.6E2	0.375
6991	2041	Sisma X SLV	6.6	0	0	0	1.0E2	0.375	6992	2041	Sisma Y SLV	0	6.6	0	0	1.0E2	0.375
6993	2041	Sisma X SLD	6.5	0	0	0	1.0E2	0.375	6994	2041	Sisma Y SLD	0	6.5	0	0	1.0E2	0.375
6995	2042	Sisma X SLV	10	0	0	0	1.6E2	0.375	6996	2042	Sisma Y SLV	0	10	0	0	1.6E2	0.375
6997	2042	Sisma X SLD	9.8	0	0	0	1.6E2	0.375	6998	2042	Sisma Y SLD	0	9.8	0	0	1.6E2	0.375
6999	2043	Sisma X SLV	9.6	0	0	0	1.5E2	0.375	7000	2043	Sisma Y SLV	0	9.6	0	0	1.5E2	0.375
7001	2043	Sisma X SLD	9.4	0	0	0	1.5E2	0.375	7002	2043	Sisma Y SLD	0	9.4	0	0	1.5E2	0.375
7003	2044	Sisma X SLV	5.9	0	0	0	91.977	0.375	7004	2044	Sisma Y SLV	0	5.9	0	0	91.977	0.375
7005	2044	Sisma X SLD	5.8	0	0	0	91.977	0.375	7006	2044	Sisma Y SLD	0	5.8	0	0	91.977	0.375
7007	2045	Sisma X SLV	8.4	0	0	0	131.28	0.375	7008	2045	Sisma Y SLV	0	8.4	0	0	131.28	0.375
7009	2045	Sisma X SLD	8.3	0	0	0	131.28	0.375	7010	2045	Sisma Y SLD	0	8.3	0	0	131.28	0.375
7011	2046	Sisma X SLV	11.2	0	0	0	1.8E2	0.375	7012	2046	Sisma Y SLV	0	11.2	0	0	1.8E2	0.375
7013	2046	Sisma X SLD	11.1	0	0	0	1.8E2	0.375	7014	2046	Sisma Y SLD	0	11.1	0	0	1.8E2	0.375
7015	2047	Sisma X SLV	25.1	0	0	0	3.9E2	0.375	7016	2047	Sisma Y SLV	0	25.1	0	0	3.9E2	0.375
7017	2047	Sisma X SLD	24.7	0	0	0	3.9E2	0.375	7018	2047	Sisma Y SLD	0	24.7	0	0	3.9E2	0.375
7019	2048	Sisma X SLV	9.1	0	0	0	1.4E2	0.375	7020	2048	Sisma Y SLV	0	9.1	0	0	1.4E2	0.375
7021	2048	Sisma X SLD	9	0	0	0	1.4E2	0.375	7022	2048	Sisma Y SLD	0	9	0	0	1.4E2	0.375
7023	2049	Sisma X SLV	10.2	0	0	0	1.6E2	0.375	7024	2049	Sisma Y SLV	0	10.2	0	0	1.6E2	0.375
7025	2049	Sisma X SLD	10	0	0	0	1.6E2	0.375	7026	2049	Sisma Y SLD	0	10	0	0	1.6E2	0.375
7027	2050	Sisma X SLV	10	0	0	0	1.6E2	0.375	7028	2050	Sisma Y SLV	0	10	0	0	1.6E2	0.375
7029	2050	Sisma X SLD	9.8	0	0	0	1.6E2	0.375	7030	2050	Sisma Y SLD	0	9.8	0	0	1.6E2	0.375
7031	2051	Sisma X SLV	8.7	0	0	0	1.4E2	0.375	7032	2051	Sisma Y SLV	0	8.7	0	0	1.4E2	0.375
7033	2051	Sisma X SLD	8.6	0	0	0	1.4E2	0.375	7034	2051	Sisma Y SLD	0	8.6	0	0	1.4E2	0.375
7035	2052	Sisma X SLV	8.8	0	0	0	1.4E2	0.375	7036	2052	Sisma Y SLV	0	8.8	0	0	1.4E2	0.375
7037	2052	Sisma X SLD	8.6	0	0	0	1.4E2	0.375	7038	2052	Sisma Y SLD	0	8.6	0	0	1.4E2	0.375
7039	2053	Sisma X SLV	8.1	0	0	0	126.7	0.375	7040	2053	Sisma Y SLV	0	8.1	0	0	126.7	0.375
7041	2053	Sisma X SLD	8	0	0	0	126.7	0.375	7042	2053	Sisma Y SLD	0	8	0	0	126.7	0.375
7043	2054	Sisma X SLV	20	0	0	0	3.1E2	0.376	7044	2054	Sisma Y SLV	0	20	0	0	3.1E2	0.376
7045	2054	Sisma X SLD	19.6	0	0	0	3.1E2	0.376	7046	2054	Sisma Y SLD	0	19.6	0	0	3.1E2	0.376
7047	2055	Sisma X SLV	19.6	0	0	0	3.0E2	0.376	7048	2055	Sisma Y SLV	0	19.6	0	0	3.0E2	0.376
7049	2055	Sisma X SLD	19.3	0	0	0	3.0E2	0.376	7050	2055	Sisma Y SLD	0	19.3	0	0	3.0E2	0.376
7051	2056	Sisma X SLV	17.9	0	0	0	2.8E2	0.377	7052	2056	Sisma Y SLV	0	17.9	0	0	2.8E2	0.377
7053	2056	Sisma X SLD	17.6	0	0	0	2.8E2	0.377	7054	2056	Sisma Y SLD	0	17.6	0	0	2.8E2	0.377
7055	2057	Sisma X SLV	17.8	0	0	0	2.8E2	0.377	7056	2057	Sisma Y SLV	0	17.8	0	0	2.8E2	0.377
7057	2057	Sisma X SLD	17.5	0	0	0	2.8E2	0.377	7058	2057	Sisma Y SLD	0	17.5	0	0	2.8E2	0.377
7059	2058	Sisma X SLV	18.8	0	0	0	2.9E2	0.377	7060	2058	Sisma Y SLV	0	18.8	0	0	2.9E2	0.377
7061	2058	Sisma X SLD	18.5	0	0	0	2.9E2	0.377	7062	2058	Sisma Y SLD	0	18.5	0	0	2.9E2	0.377
7063	2059	Sisma X SLV	20.6	0	0	0	3.2E2	0.378	7064	2059	Sisma Y SLV	0	20.6	0	0	3.2E2	0.378
7065	2059	Sisma X SLD	20.3	0	0	0	3.2E2	0.378	7066	2059	Sisma Y SLD	0	20.3	0	0	3.2E2	0.378
7067	2060	Sisma X SLV	20.3	0	0	0	314.45	0.378	7068	2060	Sisma Y SLV	0	20.3	0	0	314.45	0.378
7069	2060	Sisma X SLD	19.9	0	0	0	314.45	0.378	7070	2060	Sisma Y SLD	0	19.9	0	0	314.45	0.378
7071	2061	Sisma X SLV	18.3	0	0	0	2.8E2	0.378	7072	2061	Sisma Y SLV	0	18.3	0	0	2.8E2	0.378
7073	2061	Sisma X SLD	18	0	0	0	2.8E2	0.378	7074	2061	Sisma Y SLD	0	18	0	0	2.8E2	0.378

Indice	Nodo	Condizione	Fx	Fy	Fz	Mz	Peso	Gamma	Indice	Nodo	Condizione	Fx	Fy	Fz	Mz	Peso	Gamma
7075	2062	Sisma X SLV	19.1	0	0	0	3.0E2	0.378	7076	2062	Sisma Y SLV	0	19.1	0	0	3.0E2	0.378
7077	2062	Sisma X SLD	18.8	0	0	0	3.0E2	0.378	7078	2062	Sisma Y SLD	0	18.8	0	0	3.0E2	0.378
7079	2063	Sisma X SLV	18	0	0	0	2.8E2	0.378	7080	2063	Sisma Y SLV	0	18	0	0	2.8E2	0.378
7081	2063	Sisma X SLD	17.7	0	0	0	2.8E2	0.378	7082	2063	Sisma Y SLD	0	17.7	0	0	2.8E2	0.378
7083	2064	Sisma X SLV	19.7	0	0	0	3.1E2	0.379	7084	2064	Sisma Y SLV	0	19.7	0	0	3.1E2	0.379
7085	2064	Sisma X SLD	19.4	0	0	0	3.1E2	0.379	7086	2064	Sisma Y SLD	0	19.4	0	0	3.1E2	0.379
7087	2065	Sisma X SLV	18.9	0	0	0	2.9E2	0.379	7088	2065	Sisma Y SLV	0	18.9	0	0	2.9E2	0.379
7089	2065	Sisma X SLD	18.6	0	0	0	2.9E2	0.379	7090	2065	Sisma Y SLD	0	18.6	0	0	2.9E2	0.379
7091	2066	Sisma X SLV	19.9	0	0	0	3.1E2	0.379	7092	2066	Sisma Y SLV	0	19.9	0	0	3.1E2	0.379
7093	2066	Sisma X SLD	19.6	0	0	0	3.1E2	0.379	7094	2066	Sisma Y SLD	0	19.6	0	0	3.1E2	0.379
7095	2067	Sisma X SLV	19.5	0	0	0	3.0E2	0.379	7096	2067	Sisma Y SLV	0	19.5	0	0	3.0E2	0.379
7097	2067	Sisma X SLD	19.2	0	0	0	3.0E2	0.379	7098	2067	Sisma Y SLD	0	19.2	0	0	3.0E2	0.379
7099	2068	Sisma X SLV	18.1	0	0	0	2.8E2	0.379	7100	2068	Sisma Y SLV	0	18.1	0	0	2.8E2	0.379
7101	2068	Sisma X SLD	17.8	0	0	0	2.8E2	0.379	7102	2068	Sisma Y SLD	0	17.8	0	0	2.8E2	0.379
7103	2069	Sisma X SLV	18.1	0	0	0	2.8E2	0.38	7104	2069	Sisma Y SLV	0	18.1	0	0	2.8E2	0.38
7105	2069	Sisma X SLD	17.8	0	0	0	2.8E2	0.38	7106	2069	Sisma Y SLD	0	17.8	0	0	2.8E2	0.38
7107	2070	Sisma X SLV	14.6	0	0	0	2.2E2	0.381	7108	2070	Sisma Y SLV	0	14.6	0	0	2.2E2	0.381
7109	2070	Sisma X SLD	14.4	0	0	0	2.2E2	0.381	7110	2070	Sisma Y SLD	0	14.4	0	0	2.2E2	0.381
7111	2071	Sisma X SLV	21.2	0	0	0	3.3E2	0.381	7112	2071	Sisma Y SLV	0	21.2	0	0	3.3E2	0.381
7113	2071	Sisma X SLD	20.9	0	0	0	3.3E2	0.381	7114	2071	Sisma Y SLD	0	20.9	0	0	3.3E2	0.381
7115	2072	Sisma X SLV	17.8	0	0	0	274.44	0.381	7116	2072	Sisma Y SLV	0	17.8	0	0	274.44	0.381
7117	2072	Sisma X SLD	17.5	0	0	0	274.44	0.381	7118	2072	Sisma Y SLD	0	17.5	0	0	274.44	0.381
7119	2073	Sisma X SLV	18.8	0	0	0	2.9E2	0.381	7120	2073	Sisma Y SLV	0	18.8	0	0	2.9E2	0.381
7121	2073	Sisma X SLD	18.5	0	0	0	2.9E2	0.381	7122	2073	Sisma Y SLD	0	18.5	0	0	2.9E2	0.381
7123	2074	Sisma X SLV	16.9	0	0	0	2.6E2	0.381	7124	2074	Sisma Y SLV	0	16.9	0	0	2.6E2	0.381
7125	2074	Sisma X SLD	16.6	0	0	0	2.6E2	0.381	7126	2074	Sisma Y SLD	0	16.6	0	0	2.6E2	0.381
7127	2075	Sisma X SLV	14.7	0	0	0	2.3E2	0.381	7128	2075	Sisma Y SLV	0	14.7	0	0	2.3E2	0.381
7129	2075	Sisma X SLD	14.4	0	0	0	2.3E2	0.381	7130	2075	Sisma Y SLD	0	14.4	0	0	2.3E2	0.381
7131	2076	Sisma X SLV	18.2	0	0	0	2.8E2	0.381	7132	2076	Sisma Y SLV	0	18.2	0	0	2.8E2	0.381
7133	2076	Sisma X SLD	17.9	0	0	0	2.8E2	0.381	7134	2076	Sisma Y SLD	0	17.9	0	0	2.8E2	0.381
7135	2077	Sisma X SLV	17.4	0	0	0	2.7E2	0.382	7136	2077	Sisma Y SLV	0	17.4	0	0	2.7E2	0.382
7137	2077	Sisma X SLD	17.1	0	0	0	2.7E2	0.382	7138	2077	Sisma Y SLD	0	17.1	0	0	2.7E2	0.382
7139	2078	Sisma X SLV	18.5	0	0	0	2.8E2	0.382	7140	2078	Sisma Y SLV	0	18.5	0	0	2.8E2	0.382
7141	2078	Sisma X SLD	18.3	0	0	0	2.8E2	0.382	7142	2078	Sisma Y SLD	0	18.3	0	0	2.8E2	0.382
7143	2079	Sisma X SLV	18	0	0	0	2.8E2	0.382	7144	2079	Sisma Y SLV	0	18	0	0	2.8E2	0.382
7145	2079	Sisma X SLD	17.7	0	0	0	2.8E2	0.382	7146	2079	Sisma Y SLD	0	17.7	0	0	2.8E2	0.382
7147	2080	Sisma X SLV	18	0	0	0	2.8E2	0.382	7148	2080	Sisma Y SLV	0	18	0	0	2.8E2	0.382
7149	2080	Sisma X SLD	17.7	0	0	0	2.8E2	0.382	7150	2080	Sisma Y SLD	0	17.7	0	0	2.8E2	0.382
7151	2081	Sisma X SLV	20.4	0	0	0	3.1E2	0.382	7152	2081	Sisma Y SLV	0	20.4	0	0	3.1E2	0.382
7153	2081	Sisma X SLD	20	0	0	0	3.1E2	0.382	7154	2081	Sisma Y SLD	0	20	0	0	3.1E2	0.382
7155	2082	Sisma X SLV	18	0	0	0	276.48	0.382	7156	2082	Sisma Y SLV	0	18	0	0	276.48	0.382
7157	2082	Sisma X SLD	17.7	0	0	0	276.48	0.382	7158	2082	Sisma Y SLD	0	17.7	0	0	276.48	0.382
7159	2083	Sisma X SLV	18.2	0	0	0	2.8E2	0.382	7160	2083	Sisma Y SLV	0	18.2	0	0	2.8E2	0.382
7161	2083	Sisma X SLD	17.9	0	0	0	2.8E2	0.382	7162	2083	Sisma Y SLD	0	17.9	0	0	2.8E2	0.382
7163	2084	Sisma X SLV	18.3	0	0	0	2.8E2	0.383	7164	2084	Sisma Y SLV	0	18.3	0	0	2.8E2	0.383
7165	2084	Sisma X SLD	18	0	0	0	2.8E2	0.383	7166	2084	Sisma Y SLD	0	18	0	0	2.8E2	0.383
7167	2085	Sisma X SLV	18.3	0	0	0	2.8E2	0.384	7168	2085	Sisma Y SLV	0	18.3	0	0	2.8E2	0.384
7169	2085	Sisma X SLD	18	0	0	0	2.8E2	0.384	7170	2085	Sisma Y SLD	0	18	0	0	2.8E2	0.384
7171	2086	Sisma X SLV	20.2	0	0	0	3.1E2	0.384	7172	2086	Sisma Y SLV	0	20.2	0	0	3.1E2	0.384
7173	2086	Sisma X SLD	19.9	0	0	0	3.1E2	0.384	7174	2086	Sisma Y SLD	0	19.9	0	0	3.1E2	0.384
7175	2087	Sisma X SLV	18.2	0	0	0	2.8E2	0.384	7176	2087	Sisma Y SLV	0	18.2	0	0	2.8E2	0.384
7177	2087	Sisma X SLD	17.9	0	0	0	2.8E2	0.384	7178	2087	Sisma Y SLD	0	17.9	0	0	2.8E2	0.384
7179	2088	Sisma X SLV	19.2	0	0	0	2.9E2	0.384	7180	2088	Sisma Y SLV	0	19.2	0	0	2.9E2	0.384
7181	2088	Sisma X SLD	18.9	0	0	0	2.9E2	0.384	7182	2088	Sisma Y SLD	0	18.9	0	0	2.9E2	0.384
7183	2089	Sisma X SLV	17.5	0	0	0	2.7E2	0.384	7184	2089	Sisma Y SLV	0	17.5	0	0	2.7E2	0.384
7185	2089	Sisma X SLD	17.2	0	0	0	2.7E2	0.384	7186	2089	Sisma Y SLD	0	17.2	0	0	2.7E2	0.384
7187	2090	Sisma X SLV	15.9	0	0	0	2.4E2	0.384	7188	2090	Sisma Y SLV	0	15.9	0	0	2.4E2	0.384
7189	2090	Sisma X SLD	15.6	0	0	0	2.4E2	0.384	7190	2090	Sisma Y SLD	0	15.6	0	0	2.4E2	0.384
7191	2091	Sisma X SLV	15.8	0	0	0	2.4E2	0.385	7192	2091	Sisma Y SLV	0	15.8	0	0	2.4E2	0.385
7193	2091	Sisma X SLD	15.6	0	0	0	2.4E2	0.385	7194	2091	Sisma Y SLD	0	15.6	0	0	2.4E2	0.385
7195	2092	Sisma X SLV	18.4	0	0	0	2.8E2	0.385	7196	2092	Sisma Y SLV	0	18.4	0	0	2.8E2	0.385
7197	2092	Sisma X SLD	18.1	0	0	0	2.8E2	0.385	7198	2092	Sisma Y SLD	0	18.1	0	0	2.8E2	0.385
7199	2093	Sisma X SLV	3.5	0	0	0	53.4	0.385	7200	2093	Sisma Y SLV	0	3.5	0	0	53.4	0.385
7201	2093	Sisma X SLD	3.5	0	0	0	53.4	0.385	7202	2093	Sisma Y SLD	0	3.5	0	0	53.4	0.385
7203	2094	Sisma X SLV	18.4	0	0	0	2.8E2	0.386	7204	2094	Sisma Y SLV	0	18.4	0	0	2.8E2	0.386
7205	2094	Sisma X SLD	18.1	0	0	0	2.8E2	0.386	7206	2094	Sisma Y SLD	0	18.1	0	0	2.8E2	0.386
7207	2095	Sisma X SLV	18.6	0	0	0	2.8E2	0.386	7208	2095	Sisma Y SLV	0	18.6	0	0	2.8E2	0.386
7209	2095	Sisma X SLD	18.3	0	0	0	2.8E2	0.386	7210	2095	Sisma Y SLD	0	18.3	0	0	2.8E2	0.386
7211	2096	Sisma X SLV	19.5	0	0	0	3.0E2	0.386	7212	2096	Sisma Y SLV	0	19.5	0	0	3.0E2	0.386
7213	2096	Sisma X SLD	19.2	0	0	0	3.0E2	0.386	7214	2096	Sisma Y SLD	0	19.2	0	0	3.0E2	0.386
7215	2097	Sisma X SLV	18.4	0	0	0	2.8E2	0.386	7216	2097	Sisma Y SLV	0	18.4	0	0	2.8E2	0.386
7217	2097	Sisma X SLD	18.1	0	0	0	2.8E2	0.386	7218	2097	Sisma Y SLD	0	18.1	0	0	2.8E2	0.386
7219	2098	Sisma X SLV	19.4	0	0	0	294.38	0.386	7220	2098	Sisma Y SLV	0	19.4	0	0	294.38	0.386
7221	2098	Sisma X SLD	19.1	0	0	0	294.38	0.386	7222	2098	Sisma Y SLD	0	19.1	0	0	294.38	0.386
7223	2099	Sisma X SLV	17.9	0	0	0	2.7E2	0.386	7224	2099	Sisma Y SLV	0	17.9	0	0	2.7E2	0.386
7225	2099	Sisma X SLD	17.6	0	0	0	2.7E2	0.386	7226	2099	Sisma Y SLD	0	17.6	0	0	2.7E2	0.386
7227	2100	Sisma X SLV	18.5	0	0	0	2.8E2	0.386	7228	2100	Sisma Y SLV	0	18.5	0	0	2.8E2	0.386
7229	2100	Sisma X SLD	18.2	0	0	0	2.8E2	0.386	7230	2100	Sisma Y SLD	0	18.2	0	0	2.8E2	0.386
7231	2101	Sisma X SLV	6	0	0	0	90.293	0.387	7232	2101	Sisma Y SLV	0	6	0	0	90.293	0.387
7233	2101	Sisma X SLD	5.9	0	0	0	90.293	0.387	7234	2101	Sisma Y SLD	0	5.9	0	0	90.293	0.387
7235	2102	Sisma X SLV	18.9	0	0	0	2.9E2	0.387	7236	2102	Sisma Y SLV	0	18.9	0	0	2.9E2	0.387
7237	2102	Sisma X SLD	18.6	0	0	0	2.9E2	0.387	7238	2102	Sisma Y SLD	0	18.6	0	0	2.9E2	0.387
7239	2103	Sisma X SLV	18.5	0	0	0	2.8E2	0.387	7240	2103	Sisma Y SLV	0	18.5	0	0	2.8E2	0.387
7241	2103	Sisma X SLD	18.2	0	0	0	2.8E2	0.387	7242	2103	Sisma Y SLD	0	18.2	0	0	2.8E2	0.387
7243	2104	Sisma X SLV	19.5	0	0	0	3.0E2	0.387	7244	2104	Sisma Y SLV	0	19.5	0	0	3.0E2	0.387
7245	2104	Sisma X SLD	19.2	0	0	0	3.0E2	0.387	7246	2104	Sisma Y SLD	0	19.2	0	0	3.0E2	0.387
7247	2105	Sisma X SLV	18.1	0	0	0	2.7E2	0.387	7248	2105	Sisma Y SLV	0	18.1	0	0	2.7E2	0.387
7249	2105	Sisma X SLD	17.8	0	0	0	2.7E2	0.387	7250	2105	Sisma Y SLD	0	17.8	0	0	2.7E2	0.387
7251	2106	Sisma X SLV	18.4	0	0	0	2.8E2	0.387	7252	2106	Sisma Y SLV	0	18.4	0	0	2.8E2	0.387
7253	2106	Sisma X SLD	18.1	0	0	0	2.8E2	0.387	7254	2106	Sisma Y SLD	0	18.1	0	0	2.8E2	0.387
7255	2107	Sisma X SLV	18.6	0	0	0	2.8E2	0.387	7256	2107	Sisma Y SLV	0	18.6	0	0	2.8E2	0.387
7257	2107	Sisma X SLD	18.3	0	0	0	2.8E2	0.387	7258	2107	Sisma Y SLD	0	18.3	0	0	2.8E2	0.387
7259	2108	Sisma X SLV	18.2	0	0	0	2.8E2	0.387	7260	2108	Sisma Y SLV	0	18.2	0	0	2.8E2	0.387
7261	2108	Sisma X SLD	17.9	0	0	0	2.8E2	0.387	7262	2108	Sisma Y SLD	0	17.9	0	0	2.8E2	0.387
7263	2109	Sisma X SLV	19.5	0	0	0	3.0E2	0.387	7264	2109	Sisma Y SLV	0	19.5	0	0	3.0E2	0.387
7265	2109	Sisma X SLD	19.2	0	0	0	3.0E2	0.387	7266	2109	Sisma Y SLD	0	19.2	0	0	3.0E2	0.387
7267	2110	Sisma X SLV	18.3	0	0	0	2.8E2	0.387	7268	2110	Sisma Y SLV	0	18.3	0	0	2.8E2	0.387
7269	2110	Sisma X SLD	18	0	0	0	2.8E2	0.387	7270	2110	Sisma Y SLD	0	18	0	0	2.8E2	0.387
7271	2111	Sisma X SLV	18.6	0	0	0	281.23	0.387	7272	2111	Sisma Y SLV	0	18.6	0	0	281.23	0.387
7273	2111	Sisma X SLD	18.3	0	0	0	281.23	0.387	7274	2111	Sisma Y SLD	0	18.3	0	0	281.23	0.387
7275	2112	Sisma X SLV	18.2	0	0	0	2.8E2	0.387	7276	2112	Sisma Y SLV	0	18.2	0	0	2.8E2	0.387
7277	2112	Sisma X SLD	18	0	0	0	2.8E2	0.387	7278	2112	Sisma Y SLD	0	18	0	0	2.8E2	0.387
7279	2113	Sisma X SLV	18.6	0	0	0	2.8E2	0.387	7280	2113	Sisma Y SLV	0	18.6	0	0	2.8E2	0.387
7281	2113	Sisma X SLD	18.3	0	0	0	2.8E2	0.387	7282	2113	Sisma Y SLD	0	18.3	0	0	2.8E2	0.387

Indice	Nodo	Condizione	Fx	Fy	Fz	Mz	Peso	Gamma	Indice	Nodo	Condizione	Fx	Fy	Fz	Mz	Peso	Gamma
7283	2114	Sisma X SLV	18.3	0	0	0	2.8E2	0.387	7284	2114	Sisma Y SLV	0	18.3	0	0	2.8E2	0.387
7285	2114	Sisma X SLD	18	0	0	0	2.8E2	0.387	7286	2114	Sisma Y SLD	0	18	0	0	2.8E2	0.387
7287	2115	Sisma X SLV	17.4	0	0	0	2.6E2	0.387	7288	2115	Sisma Y SLV	0	17.4	0	0	2.6E2	0.387
7289	2115	Sisma X SLD	17.1	0	0	0	2.6E2	0.387	7290	2115	Sisma Y SLD	0	17.1	0	0	2.6E2	0.387
7291	2116	Sisma X SLV	30.3	0	0	0	4.6E2	0.387	7292	2116	Sisma Y SLV	0	30.3	0	0	4.6E2	0.387
7293	2116	Sisma X SLD	29.8	0	0	0	4.6E2	0.387	7294	2116	Sisma Y SLD	0	29.8	0	0	4.6E2	0.387
7295	2117	Sisma X SLV	28.8	0	0	0	4.4E2	0.387	7296	2117	Sisma Y SLV	0	28.8	0	0	4.4E2	0.387
7297	2117	Sisma X SLD	28.4	0	0	0	4.4E2	0.387	7298	2117	Sisma Y SLD	0	28.4	0	0	4.4E2	0.387
7299	2118	Sisma X SLV	18.6	0	0	0	281.27	0.387	7300	2118	Sisma Y SLV	0	18.6	0	0	281.27	0.387
7301	2118	Sisma X SLD	18.3	0	0	0	281.27	0.387	7302	2118	Sisma Y SLD	0	18.3	0	0	281.27	0.387
7303	2119	Sisma X SLV	17.4	0	0	0	2.6E2	0.387	7304	2119	Sisma Y SLV	0	17.4	0	0	2.6E2	0.387
7305	2119	Sisma X SLD	17.1	0	0	0	2.6E2	0.387	7306	2119	Sisma Y SLD	0	17.1	0	0	2.6E2	0.387
7307	2120	Sisma X SLV	20.2	0	0	0	3.1E2	0.387	7308	2120	Sisma Y SLV	0	20.2	0	0	3.1E2	0.387
7309	2120	Sisma X SLD	19.9	0	0	0	3.1E2	0.387	7310	2120	Sisma Y SLD	0	19.9	0	0	3.1E2	0.387
7311	2121	Sisma X SLV	20.2	0	0	0	3.1E2	0.387	7312	2121	Sisma Y SLV	0	20.2	0	0	3.1E2	0.387
7313	2121	Sisma X SLD	19.9	0	0	0	3.1E2	0.387	7314	2121	Sisma Y SLD	0	19.9	0	0	3.1E2	0.387
7315	2122	Sisma X SLV	20.5	0	0	0	3.1E2	0.387	7316	2122	Sisma Y SLV	0	20.5	0	0	3.1E2	0.387
7317	2122	Sisma X SLD	20.2	0	0	0	3.1E2	0.387	7318	2122	Sisma Y SLD	0	20.2	0	0	3.1E2	0.387
7319	2123	Sisma X SLV	20.5	0	0	0	3.1E2	0.387	7320	2123	Sisma Y SLV	0	20.5	0	0	3.1E2	0.387
7321	2123	Sisma X SLD	20.2	0	0	0	3.1E2	0.387	7322	2123	Sisma Y SLD	0	20.2	0	0	3.1E2	0.387
7323	2124	Sisma X SLV	21	0	0	0	3.2E2	0.387	7324	2124	Sisma Y SLV	0	21	0	0	3.2E2	0.387
7325	2124	Sisma X SLD	20.7	0	0	0	3.2E2	0.387	7326	2124	Sisma Y SLD	0	20.7	0	0	3.2E2	0.387
7327	2125	Sisma X SLV	21	0	0	0	3.2E2	0.387	7328	2125	Sisma Y SLV	0	21	0	0	3.2E2	0.387
7329	2125	Sisma X SLD	20.7	0	0	0	3.2E2	0.387	7330	2125	Sisma Y SLD	0	20.7	0	0	3.2E2	0.387
7331	2126	Sisma X SLV	21.5	0	0	0	3.3E2	0.387	7332	2126	Sisma Y SLV	0	21.5	0	0	3.3E2	0.387
7333	2126	Sisma X SLD	21.2	0	0	0	3.3E2	0.387	7334	2126	Sisma Y SLD	0	21.2	0	0	3.3E2	0.387
7335	2127	Sisma X SLV	21.5	0	0	0	3.3E2	0.387	7336	2127	Sisma Y SLV	0	21.5	0	0	3.3E2	0.387
7337	2127	Sisma X SLD	21.2	0	0	0	3.3E2	0.387	7338	2127	Sisma Y SLD	0	21.2	0	0	3.3E2	0.387
7339	2128	Sisma X SLV	21.9	0	0	0	3.3E2	0.387	7340	2128	Sisma Y SLV	0	21.9	0	0	3.3E2	0.387
7341	2128	Sisma X SLD	21.6	0	0	0	3.3E2	0.387	7342	2128	Sisma Y SLD	0	21.6	0	0	3.3E2	0.387
7343	2129	Sisma X SLV	21.9	0	0	0	3.3E2	0.387	7344	2129	Sisma Y SLV	0	21.9	0	0	3.3E2	0.387
7345	2129	Sisma X SLD	21.6	0	0	0	3.3E2	0.387	7346	2129	Sisma Y SLD	0	21.6	0	0	3.3E2	0.387
7347	2130	Sisma X SLV	22.2	0	0	0	3.4E2	0.387	7348	2130	Sisma Y SLV	0	22.2	0	0	3.4E2	0.387
7349	2130	Sisma X SLD	21.9	0	0	0	3.4E2	0.387	7350	2130	Sisma Y SLD	0	21.9	0	0	3.4E2	0.387
7351	2131	Sisma X SLV	22.2	0	0	0	3.4E2	0.387	7352	2131	Sisma Y SLV	0	22.2	0	0	3.4E2	0.387
7353	2131	Sisma X SLD	21.9	0	0	0	3.4E2	0.387	7354	2131	Sisma Y SLD	0	21.9	0	0	3.4E2	0.387
7355	2132	Sisma X SLV	22.4	0	0	0	3.4E2	0.387	7356	2132	Sisma Y SLV	0	22.4	0	0	3.4E2	0.387
7357	2132	Sisma X SLD	22.1	0	0	0	3.4E2	0.387	7358	2132	Sisma Y SLD	0	22.1	0	0	3.4E2	0.387
7359	2133	Sisma X SLV	22.4	0	0	0	3.4E2	0.387	7360	2133	Sisma Y SLV	0	22.4	0	0	3.4E2	0.387
7361	2133	Sisma X SLD	22.1	0	0	0	3.4E2	0.387	7362	2133	Sisma Y SLD	0	22.1	0	0	3.4E2	0.387
7363	2134	Sisma X SLV	22.5	0	0	0	3.4E2	0.387	7364	2134	Sisma Y SLV	0	22.5	0	0	3.4E2	0.387
7365	2134	Sisma X SLD	22.2	0	0	0	3.4E2	0.387	7366	2134	Sisma Y SLD	0	22.2	0	0	3.4E2	0.387
7367	2135	Sisma X SLV	22.5	0	0	0	3.4E2	0.387	7368	2135	Sisma Y SLV	0	22.5	0	0	3.4E2	0.387
7369	2135	Sisma X SLD	22.2	0	0	0	3.4E2	0.387	7370	2135	Sisma Y SLD	0	22.2	0	0	3.4E2	0.387
7371	2136	Sisma X SLV	22.6	0	0	0	3.4E2	0.387	7372	2136	Sisma Y SLV	0	22.6	0	0	3.4E2	0.387
7373	2136	Sisma X SLD	22.2	0	0	0	3.4E2	0.387	7374	2136	Sisma Y SLD	0	22.2	0	0	3.4E2	0.387
7375	2137	Sisma X SLV	22.6	0	0	0	3.4E2	0.387	7376	2137	Sisma Y SLV	0	22.6	0	0	3.4E2	0.387
7377	2137	Sisma X SLD	22.2	0	0	0	3.4E2	0.387	7378	2137	Sisma Y SLD	0	22.2	0	0	3.4E2	0.387
7379	2138	Sisma X SLV	22.6	0	0	0	3.4E2	0.387	7380	2138	Sisma Y SLV	0	22.6	0	0	3.4E2	0.387
7381	2138	Sisma X SLD	22.2	0	0	0	3.4E2	0.387	7382	2138	Sisma Y SLD	0	22.2	0	0	3.4E2	0.387
7383	2139	Sisma X SLV	22.6	0	0	0	3.4E2	0.387	7384	2139	Sisma Y SLV	0	22.6	0	0	3.4E2	0.387
7385	2139	Sisma X SLD	22.2	0	0	0	3.4E2	0.387	7386	2139	Sisma Y SLD	0	22.2	0	0	3.4E2	0.387
7387	2140	Sisma X SLV	22.6	0	0	0	3.4E2	0.387	7388	2140	Sisma Y SLV	0	22.6	0	0	3.4E2	0.387
7389	2140	Sisma X SLD	22.2	0	0	0	3.4E2	0.387	7390	2140	Sisma Y SLD	0	22.2	0	0	3.4E2	0.387
7391	2141	Sisma X SLV	22.6	0	0	0	3.4E2	0.387	7392	2141	Sisma Y SLV	0	22.6	0	0	3.4E2	0.387
7393	2141	Sisma X SLD	22.2	0	0	0	3.4E2	0.387	7394	2141	Sisma Y SLD	0	22.2	0	0	3.4E2	0.387
7395	2142	Sisma X SLV	32.5	0	0	0	4.9E2	0.387	7396	2142	Sisma Y SLV	0	32.5	0	0	4.9E2	0.387
7397	2142	Sisma X SLD	32	0	0	0	4.9E2	0.387	7398	2142	Sisma Y SLD	0	32	0	0	4.9E2	0.387
7399	2143	Sisma X SLV	32	0	0	0	4.8E2	0.387	7400	2143	Sisma Y SLV	0	32	0	0	4.8E2	0.387
7401	2143	Sisma X SLD	31.5	0	0	0	4.8E2	0.387	7402	2143	Sisma Y SLD	0	31.5	0	0	4.8E2	0.387
7403	2144	Sisma X SLV	21.5	0	0	0	325.45	0.387	7404	2144	Sisma Y SLV	0	21.5	0	0	325.45	0.387
7405	2144	Sisma X SLD	21.2	0	0	0	325.45	0.387	7406	2144	Sisma Y SLD	0	21.2	0	0	325.45	0.387
7407	2145	Sisma X SLV	21.5	0	0	0	3.3E2	0.387	7408	2145	Sisma Y SLV	0	21.5	0	0	3.3E2	0.387
7409	2145	Sisma X SLD	21.2	0	0	0	3.3E2	0.387	7410	2145	Sisma Y SLD	0	21.2	0	0	3.3E2	0.387
7411	2146	Sisma X SLV	21.5	0	0	0	3.3E2	0.387	7412	2146	Sisma Y SLV	0	21.5	0	0	3.3E2	0.387
7413	2146	Sisma X SLD	21.2	0	0	0	3.3E2	0.387	7414	2146	Sisma Y SLD	0	21.2	0	0	3.3E2	0.387
7415	2147	Sisma X SLV	21.5	0	0	0	3.3E2	0.387	7416	2147	Sisma Y SLV	0	21.5	0	0	3.3E2	0.387
7417	2147	Sisma X SLD	21.2	0	0	0	3.3E2	0.387	7418	2147	Sisma Y SLD	0	21.2	0	0	3.3E2	0.387
7419	2148	Sisma X SLV	21.5	0	0	0	3.2E2	0.387	7420	2148	Sisma Y SLV	0	21.5	0	0	3.2E2	0.387
7421	2148	Sisma X SLD	21.1	0	0	0	3.2E2	0.387	7422	2148	Sisma Y SLD	0	21.1	0	0	3.2E2	0.387
7423	2149	Sisma X SLV	21.4	0	0	0	324.04	0.387	7424	2149	Sisma Y SLV	0	21.4	0	0	324.04	0.387
7425	2149	Sisma X SLD	21.1	0	0	0	324.04	0.387	7426	2149	Sisma Y SLD	0	21.1	0	0	324.04	0.387
7427	2150	Sisma X SLV	21.4	0	0	0	3.2E2	0.387	7428	2150	Sisma Y SLV	0	21.4	0	0	3.2E2	0.387
7429	2150	Sisma X SLD	21	0	0	0	3.2E2	0.387	7430	2150	Sisma Y SLD	0	21	0	0	3.2E2	0.387
7431	2151	Sisma X SLV	21.3	0	0	0	3.2E2	0.387	7432	2151	Sisma Y SLV	0	21.3	0	0	3.2E2	0.387
7433	2151	Sisma X SLD	21	0	0	0	3.2E2	0.387	7434	2151	Sisma Y SLD	0	21	0	0	3.2E2	0.387
7435	2152	Sisma X SLV	21.3	0	0	0	3.2E2	0.387	7436	2152	Sisma Y SLV	0	21.3	0	0	3.2E2	0.387
7437	2152	Sisma X SLD	21	0	0	0	3.2E2	0.387	7438	2152	Sisma Y SLD	0	21	0	0	3.2E2	0.387
7439	2153	Sisma X SLV	21.4	0	0	0	3.2E2	0.387	7440	2153	Sisma Y SLV	0	21.4	0	0	3.2E2	0.387
7441	2153	Sisma X SLD	21	0	0	0	3.2E2	0.387	7442	2153	Sisma Y SLD	0	21	0	0	3.2E2	0.387
7443	2154	Sisma X SLV	21.5	0	0	0	3.2E2	0.387	7444	2154	Sisma Y SLV	0	21.5	0	0	3.2E2	0.387
7445	2154	Sisma X SLD	21.1	0	0	0	3.2E2	0.387	7446	2154	Sisma Y SLD	0	21.1	0	0	3.2E2	0.387
7447	2155	Sisma X SLV	22.8	0	0	0	3.5E2	0.387	7448	2155	Sisma Y SLV	0	22.8	0	0	3.5E2	0.387
7449	2155	Sisma X SLD	22.5	0	0	0	3.5E2	0.387	7450	2155	Sisma Y SLD	0	22.5	0	0	3.5E2	0.387
7451	2156	Sisma X SLV	27.7	0	0	0	4.2E2	0.387	7452	2156	Sisma Y SLV	0	27.7	0	0	4.2E2	0.387
7453	2156	Sisma X SLD	27.3	0	0	0	4.2E2	0.387	7454	2156	Sisma Y SLD	0	27.3	0	0	4.2E2	0.387
7455	2157	Sisma X SLV	28.3	0	0	0	4.3E2	0.387	7456	2157	Sisma Y SLV	0	28.3	0	0	4.3E2	0.387
7457	2157	Sisma X SLD	27.8	0	0	0	4.3E2	0.387	7458	2157	Sisma Y SLD	0	27.8	0	0	4.3E2	0.387
7459	2158	Sisma X SLV	23.6	0	0	0	3.6E2	0.387	7460	2158	Sisma Y SLV	0	23.6	0	0	3.6E2	0.387
7461	2158	Sisma X SLD	23.2	0	0	0	3.6E2	0.387	7462	2158	Sisma Y SLD	0	23.2	0	0	3.6E2	0.387
7463	2159	Sisma X SLV	23.6	0	0	0	3.6E2	0.387	7464	2159	Sisma Y SLV	0	23.6	0	0	3.6E2	0.387
7465	2159	Sisma X SLD	23.2	0	0	0	3.6E2	0.387	7466	2159	Sisma Y SLD	0	23.2	0	0	3.6E2	0.387
7467	2160	Sisma X SLV	23.5	0	0	0	3.6E2	0.387	7468	2160	Sisma Y SLV	0	23.5	0	0	3.6E2	0.387
7469	2160	Sisma X SLD	23.2	0	0	0	3.6E2	0.387	7470	2160	Sisma Y SLD	0	23.2	0	0	3.6E2	0.387
7471	2161	Sisma X SLV	23.4	0	0	0	3.5E2	0.387	7472	2161	Sisma Y SLV	0	23.4	0	0	3.5E2	0.387
7473	2161	Sisma X SLD	23	0	0	0	3.5E2	0.387	7474	2161	Sisma Y SLD	0	23	0	0	3.5E2	0.387
7475	2162	Sisma X SLV	23.2	0	0	0	3.5E2	0.387	7476	2162	Sisma Y SLV	0	23.2	0	0	3.5E2	0.387
7477	2162	Sisma X SLD	22.8	0	0	0	3.5E2	0.387	7478	2162	Sisma Y SLD	0	22.8	0	0	3.5E2	0.387
7479	2163	Sisma X SLV	23	0	0	0	3.5E2	0.387	7480	2163	Sisma Y SLV	0	23	0	0	3.5E2	0.387
7481	2163	Sisma X SLD	22.6	0	0	0	3.5E2	0.387	7482	2163	Sisma Y SLD	0	22.6	0	0	3.5E2	0.387
7483	2164	Sisma X SLV	22.7	0	0	0	3.4E2	0.387	7484	2164	Sisma Y SLV	0	22.7	0	0	3.4E2	0.387

Indice	Nodo	Condizione	Fx	Fy	Fz	Mz	Peso	Gamma	Indice	Nodo	Condizione	Fx	Fy	Fz	Mz	Peso	Gamma
7485	2164	Sisma X SLD	22.3	0	0	0	3.4E2	0.387	7486	2164	Sisma Y SLD	0	22.3	0	0	3.4E2	0.387
7487	2165	Sisma X SLV	22.5	0	0	0	340.22	0.387	7488	2165	Sisma Y SLV	0	22.5	0	0	340.22	0.387
7489	2165	Sisma X SLD	22.1	0	0	0	340.22	0.387	7490	2165	Sisma Y SLD	0	22.1	0	0	340.22	0.387
7491	2166	Sisma X SLV	22.4	0	0	0	3.4E2	0.387	7492	2166	Sisma Y SLV	0	22.4	0	0	3.4E2	0.387
7493	2166	Sisma X SLD	22	0	0	0	3.4E2	0.387	7494	2166	Sisma Y SLD	0	22	0	0	3.4E2	0.387
7495	2167	Sisma X SLV	22.3	0	0	0	3.4E2	0.387	7496	2167	Sisma Y SLV	0	22.3	0	0	3.4E2	0.387
7497	2167	Sisma X SLD	22	0	0	0	3.4E2	0.387	7498	2167	Sisma Y SLD	0	22	0	0	3.4E2	0.387
7499	2168	Sisma X SLV	19.5	0	0	0	3.0E2	0.387	7500	2168	Sisma Y SLV	0	19.5	0	0	3.0E2	0.387
7501	2168	Sisma X SLD	19.2	0	0	0	3.0E2	0.387	7502	2168	Sisma Y SLD	0	19.2	0	0	3.0E2	0.387
7503	2169	Sisma X SLV	18.3	0	0	0	276.13	0.387	7504	2169	Sisma Y SLV	0	18.3	0	0	276.13	0.387
7505	2169	Sisma X SLD	18	0	0	0	276.13	0.387	7506	2169	Sisma Y SLD	0	18	0	0	276.13	0.387
7507	2170	Sisma X SLV	30.5	0	0	0	4.6E2	0.387	7508	2170	Sisma Y SLV	0	30.5	0	0	4.6E2	0.387
7509	2170	Sisma X SLD	30.1	0	0	0	4.6E2	0.387	7510	2170	Sisma Y SLD	0	30.1	0	0	4.6E2	0.387
7511	2171	Sisma X SLV	30.8	0	0	0	4.7E2	0.387	7512	2171	Sisma Y SLV	0	30.8	0	0	4.7E2	0.387
7513	2171	Sisma X SLD	30.3	0	0	0	4.7E2	0.387	7514	2171	Sisma Y SLD	0	30.3	0	0	4.7E2	0.387
7515	2172	Sisma X SLV	18.4	0	0	0	278.1	0.387	7516	2172	Sisma Y SLV	0	18.4	0	0	278.1	0.387
7517	2172	Sisma X SLD	18.1	0	0	0	278.1	0.387	7518	2172	Sisma Y SLD	0	18.1	0	0	278.1	0.387
7519	2173	Sisma X SLV	3.6	0	0	0	54.366	0.388	7520	2173	Sisma Y SLV	0	3.6	0	0	54.366	0.388
7521	2173	Sisma X SLD	3.5	0	0	0	54.366	0.388	7522	2173	Sisma Y SLD	0	3.5	0	0	54.366	0.388
7523	2174	Sisma X SLV	9.8	0	0	0	1.5E2	0.389	7524	2174	Sisma Y SLV	0	9.8	0	0	1.5E2	0.389
7525	2174	Sisma X SLD	9.7	0	0	0	1.5E2	0.389	7526	2174	Sisma Y SLD	0	9.7	0	0	1.5E2	0.389
7527	2175	Sisma X SLV	9.8	0	0	0	1.5E2	0.389	7528	2175	Sisma Y SLV	0	9.8	0	0	1.5E2	0.389
7529	2175	Sisma X SLD	9.7	0	0	0	1.5E2	0.389	7530	2175	Sisma Y SLD	0	9.7	0	0	1.5E2	0.389
7531	2176	Sisma X SLV	7	0	0	0	1.1E2	0.39	7532	2176	Sisma Y SLV	0	7	0	0	1.1E2	0.39
7533	2176	Sisma X SLD	6.9	0	0	0	1.1E2	0.39	7534	2176	Sisma Y SLD	0	6.9	0	0	1.1E2	0.39
7535	2177	Sisma X SLV	18.6	0	0	0	2.8E2	0.39	7536	2177	Sisma Y SLV	0	18.6	0	0	2.8E2	0.39
7537	2177	Sisma X SLD	18.3	0	0	0	2.8E2	0.39	7538	2177	Sisma Y SLD	0	18.3	0	0	2.8E2	0.39
7539	2178	Sisma X SLV	10.7	0	0	0	1.6E2	0.39	7540	2178	Sisma Y SLV	0	10.7	0	0	1.6E2	0.39
7541	2178	Sisma X SLD	10.5	0	0	0	1.6E2	0.39	7542	2178	Sisma Y SLD	0	10.5	0	0	1.6E2	0.39
7543	2179	Sisma X SLV	10.1	0	0	0	1.5E2	0.391	7544	2179	Sisma Y SLV	0	10.1	0	0	1.5E2	0.391
7545	2179	Sisma X SLD	9.9	0	0	0	1.5E2	0.391	7546	2179	Sisma Y SLD	0	9.9	0	0	1.5E2	0.391
7547	2180	Sisma X SLV	21.3	0	0	0	319.83	0.391	7548	2180	Sisma Y SLV	0	21.3	0	0	319.83	0.391
7549	2180	Sisma X SLD	21	0	0	0	319.83	0.391	7550	2180	Sisma Y SLD	0	21	0	0	319.83	0.391
7551	2181	Sisma X SLV	20	0	0	0	3.0E2	0.391	7552	2181	Sisma Y SLV	0	20	0	0	3.0E2	0.391
7553	2181	Sisma X SLD	19.7	0	0	0	3.0E2	0.391	7554	2181	Sisma Y SLD	0	19.7	0	0	3.0E2	0.391
7555	2182	Sisma X SLV	9.8	0	0	0	1.5E2	0.392	7556	2182	Sisma Y SLV	0	9.8	0	0	1.5E2	0.392
7557	2182	Sisma X SLD	9.7	0	0	0	1.5E2	0.392	7558	2182	Sisma Y SLD	0	9.7	0	0	1.5E2	0.392
7559	2183	Sisma X SLV	9.8	0	0	0	1.5E2	0.392	7560	2183	Sisma Y SLV	0	9.8	0	0	1.5E2	0.392
7561	2183	Sisma X SLD	9.7	0	0	0	1.5E2	0.392	7562	2183	Sisma Y SLD	0	9.7	0	0	1.5E2	0.392
7563	2184	Sisma X SLV	23.4	0	0	0	3.5E2	0.392	7564	2184	Sisma Y SLV	0	23.4	0	0	3.5E2	0.392
7565	2184	Sisma X SLD	23.1	0	0	0	3.5E2	0.392	7566	2184	Sisma Y SLD	0	23.1	0	0	3.5E2	0.392
7567	2185	Sisma X SLV	2.3	0	0	0	34.088	0.392	7568	2185	Sisma Y SLV	0	2.3	0	0	34.088	0.392
7569	2185	Sisma X SLD	2.2	0	0	0	34.088	0.392	7570	2185	Sisma Y SLD	0	2.2	0	0	34.088	0.392
7571	2186	Sisma X SLV	18.6	0	0	0	2.8E2	0.392	7572	2186	Sisma Y SLV	0	18.6	0	0	2.8E2	0.392
7573	2186	Sisma X SLD	18.3	0	0	0	2.8E2	0.392	7574	2186	Sisma Y SLD	0	18.3	0	0	2.8E2	0.392
7575	2187	Sisma X SLV	7.5	0	0	0	1.1E2	0.392	7576	2187	Sisma Y SLV	0	7.5	0	0	1.1E2	0.392
7577	2187	Sisma X SLD	7.4	0	0	0	1.1E2	0.392	7578	2187	Sisma Y SLD	0	7.4	0	0	1.1E2	0.392
7579	2188	Sisma X SLV	10.7	0	0	0	1.6E2	0.393	7580	2188	Sisma Y SLV	0	10.7	0	0	1.6E2	0.393
7581	2188	Sisma X SLD	10.6	0	0	0	1.6E2	0.393	7582	2188	Sisma Y SLD	0	10.6	0	0	1.6E2	0.393
7583	2189	Sisma X SLV	20.8	0	0	0	3.1E2	0.394	7584	2189	Sisma Y SLV	0	20.8	0	0	3.1E2	0.394
7585	2189	Sisma X SLD	20.5	0	0	0	3.1E2	0.394	7586	2189	Sisma Y SLD	0	20.5	0	0	3.1E2	0.394
7587	2190	Sisma X SLV	11.1	0	0	0	1.7E2	0.394	7588	2190	Sisma Y SLV	0	11.1	0	0	1.7E2	0.394
7589	2190	Sisma X SLD	10.9	0	0	0	1.7E2	0.394	7590	2190	Sisma Y SLD	0	10.9	0	0	1.7E2	0.394
7591	2191	Sisma X SLV	9.9	0	0	0	1.5E2	0.394	7592	2191	Sisma Y SLV	0	9.9	0	0	1.5E2	0.394
7593	2191	Sisma X SLD	9.7	0	0	0	1.5E2	0.394	7594	2191	Sisma Y SLD	0	9.7	0	0	1.5E2	0.394
7595	2192	Sisma X SLV	9.9	0	0	0	1.5E2	0.394	7596	2192	Sisma Y SLV	0	9.9	0	0	1.5E2	0.394
7597	2192	Sisma X SLD	9.7	0	0	0	1.5E2	0.394	7598	2192	Sisma Y SLD	0	9.7	0	0	1.5E2	0.394
7599	2193	Sisma X SLV	10.2	0	0	0	1.5E2	0.394	7600	2193	Sisma Y SLV	0	10.2	0	0	1.5E2	0.394
7601	2193	Sisma X SLD	10	0	0	0	1.5E2	0.394	7602	2193	Sisma Y SLD	0	10	0	0	1.5E2	0.394
7603	2194	Sisma X SLV	21.4	0	0	0	317.94	0.394	7604	2194	Sisma Y SLV	0	21.4	0	0	317.94	0.394
7605	2194	Sisma X SLD	21.1	0	0	0	317.94	0.394	7606	2194	Sisma Y SLD	0	21.1	0	0	317.94	0.394
7607	2195	Sisma X SLV	18.7	0	0	0	2.8E2	0.395	7608	2195	Sisma Y SLV	0	18.7	0	0	2.8E2	0.395
7609	2195	Sisma X SLD	18.4	0	0	0	2.8E2	0.395	7610	2195	Sisma Y SLD	0	18.4	0	0	2.8E2	0.395
7611	2196	Sisma X SLV	19.9	0	0	0	3.0E2	0.395	7612	2196	Sisma Y SLV	0	19.9	0	0	3.0E2	0.395
7613	2196	Sisma X SLD	19.6	0	0	0	3.0E2	0.395	7614	2196	Sisma Y SLD	0	19.6	0	0	3.0E2	0.395
7615	2197	Sisma X SLV	2.9	0	0	0	43.071	0.395	7616	2197	Sisma Y SLV	0	2.9	0	0	43.071	0.395
7617	2197	Sisma X SLD	2.9	0	0	0	43.071	0.395	7618	2197	Sisma Y SLD	0	2.9	0	0	43.071	0.395
7619	2198	Sisma X SLV	7.8	0	0	0	1.2E2	0.395	7620	2198	Sisma Y SLV	0	7.8	0	0	1.2E2	0.395
7621	2198	Sisma X SLD	7.7	0	0	0	1.2E2	0.395	7622	2198	Sisma Y SLD	0	7.7	0	0	1.2E2	0.395
7623	2199	Sisma X SLV	19.1	0	0	0	2.8E2	0.396	7624	2199	Sisma Y SLV	0	19.1	0	0	2.8E2	0.396
7625	2199	Sisma X SLD	18.8	0	0	0	2.8E2	0.396	7626	2199	Sisma Y SLD	0	18.8	0	0	2.8E2	0.396
7627	2200	Sisma X SLV	10.8	0	0	0	1.6E2	0.396	7628	2200	Sisma Y SLV	0	10.8	0	0	1.6E2	0.396
7629	2200	Sisma X SLD	10.6	0	0	0	1.6E2	0.396	7630	2200	Sisma Y SLD	0	10.6	0	0	1.6E2	0.396
7631	2201	Sisma X SLV	23.7	0	0	0	3.5E2	0.397	7632	2201	Sisma Y SLV	0	23.7	0	0	3.5E2	0.397
7633	2201	Sisma X SLD	23.3	0	0	0	3.5E2	0.397	7634	2201	Sisma Y SLD	0	23.3	0	0	3.5E2	0.397
7635	2202	Sisma X SLV	9.9	0	0	0	145.93	0.397	7636	2202	Sisma Y SLV	0	9.9	0	0	145.93	0.397
7637	2202	Sisma X SLD	9.7	0	0	0	145.93	0.397	7638	2202	Sisma Y SLD	0	9.7	0	0	145.93	0.397
7639	2203	Sisma X SLV	9.9	0	0	0	145.93	0.397	7640	2203	Sisma Y SLV	0	9.9	0	0	145.93	0.397
7641	2203	Sisma X SLD	9.7	0	0	0	145.93	0.397	7642	2203	Sisma Y SLD	0	9.7	0	0	145.93	0.397
7643	2204	Sisma X SLV	18.7	0	0	0	2.8E2	0.398	7644	2204	Sisma Y SLV	0	18.7	0	0	2.8E2	0.398
7645	2204	Sisma X SLD	18.4	0	0	0	2.8E2	0.398	7646	2204	Sisma Y SLD	0	18.4	0	0	2.8E2	0.398
7647	2205	Sisma X SLV	21.5	0	0	0	3.2E2	0.399	7648	2205	Sisma Y SLV	0	21.5	0	0	3.2E2	0.399
7649	2205	Sisma X SLD	21.1	0	0	0	3.2E2	0.399	7650	2205	Sisma Y SLD	0	21.1	0	0	3.2E2	0.399
7651	2206	Sisma X SLV	10.2	0	0	0	149.96	0.399	7652	2206	Sisma Y SLV	0	10.2	0	0	149.96	0.399
7653	2206	Sisma X SLD	10	0	0	0	149.96	0.399	7654	2206	Sisma Y SLD	0	10	0	0	149.96	0.399
7655	2207	Sisma X SLV	7.9	0	0	0	115.92	0.399	7656	2207	Sisma Y SLV	0	7.9	0	0	115.92	0.399
7657	2207	Sisma X SLD	7.8	0	0	0	115.92	0.399	7658	2207	Sisma Y SLD	0	7.8	0	0	115.92	0.399
7659	2208	Sisma X SLV	19.7	0	0	0	2.9E2	0.399	7660	2208	Sisma Y SLV	0	19.7	0	0	2.9E2	0.399
7661	2208	Sisma X SLD	19.4	0	0	0	2.9E2	0.399	7662	2208	Sisma Y SLD	0	19.4	0	0	2.9E2	0.399
7663	2209	Sisma X SLV	6.1	0	0	0	90.209	0.399	7664	2209	Sisma Y SLV	0	6.1	0	0	90.209	0.399
7665	2209	Sisma X SLD	6.1	0	0	0	90.209	0.399	7666	2209	Sisma Y SLD	0	6.1	0	0	90.209	0.399
7667	2210	Sisma X SLV	10.8	0	0	0	1.6E2	0.4	7668	2210	Sisma Y SLV	0	10.8	0	0	1.6E2	0.4
7669	2210	Sisma X SLD	10.6	0	0	0	1.6E2	0.4	7670	2210	Sisma Y SLD	0	10.6	0	0	1.6E2	0.4
7671	2211	Sisma X SLV	9.9	0	0	0	1.5E2	0.4	7672	2211	Sisma Y SLV	0	9.9	0	0	1.5E2	0.4
7673	2211	Sisma X SLD	9.8	0	0	0	1.5E2	0.4	7674	2211	Sisma Y SLD	0	9.8	0	0	1.5E2	0.4
7675	2212	Sisma X SLV	9.9	0	0	0	1.5E2	0.4	7676	2212	Sisma Y SLV	0	9.9	0	0	1.5E2	0.4
7677	2212	Sisma X SLD	9.8	0	0	0	1.5E2	0.4	7678	2212	Sisma Y SLD	0	9.8	0	0	1.5E2	0.4
7679	2213	Sisma X SLV	21	0	0	0	3.1E2	0.4	7680	2213	Sisma Y SLV	0	21	0	0	3.1E2	0.4
7681	2213	Sisma X SLD	20.7	0	0	0	3.1E2	0.4	7682	2213	Sisma Y SLD	0	20.7	0	0	3.1E2	0.4
7683	2214	Sisma X SLV	11.2	0	0	0	1.6E2	0.4	7684	2214	Sisma Y SLV	0	11.2	0	0	1.6E2	0.4
7685	2214	Sisma X SLD	11	0	0	0	1.6E2	0.4	7686	2214	Sisma Y SLD	0	11	0	0	1.6E2	0.4
7687	2215	Sisma X SLV	8.3	0	0	0	1.2E2	0.401	7688	2215	Sisma Y SLV	0	8.3	0	0	1.2E2	0.401
7689	2215	Sisma X SLD	8.2	0	0	0	1.2E2	0.401	7690	2215	Sisma Y SLD	0	8.2	0	0	1.2E2	0.401
7691	2216	Sisma X SLV	18.8	0	0	0	2.7E2	0.401	7692	2216	Sisma Y SLV	0	18.8	0	0	2.7E2	0.401

Indice	Nodo	Condizione	Fx	Fy	Fz	Mz	Peso	Gamma	Indice	Nodo	Condizione	Fx	Fy	Fz	Mz	Peso	Gamma
7693	2216	Sisma X SLD	18.5	0	0	0	2.7E2	0.401	7694	2216	Sisma Y SLD	0	18.5	0	0	2.7E2	0.401
7695	2217	Sisma X SLV	24.1	0	0	0	3.5E2	0.403	7696	2217	Sisma Y SLV	0	24.1	0	0	3.5E2	0.403
7697	2217	Sisma X SLD	23.7	0	0	0	3.5E2	0.403	7698	2217	Sisma Y SLD	0	23.7	0	0	3.5E2	0.403
7699	2218	Sisma X SLV	6.7	0	0	0	96.967	0.403	7700	2218	Sisma Y SLV	0	6.7	0	0	96.967	0.403
7701	2218	Sisma X SLD	6.6	0	0	0	96.967	0.403	7702	2218	Sisma Y SLD	0	6.6	0	0	96.967	0.403
7703	2219	Sisma X SLV	21.6	0	0	0	3.1E2	0.404	7704	2219	Sisma Y SLV	0	21.6	0	0	3.1E2	0.404
7705	2219	Sisma X SLD	21.2	0	0	0	3.1E2	0.404	7706	2219	Sisma Y SLD	0	21.2	0	0	3.1E2	0.404
7707	2220	Sisma X SLV	10.3	0	0	0	1.5E2	0.404	7708	2220	Sisma Y SLV	0	10.3	0	0	1.5E2	0.404
7709	2220	Sisma X SLD	10.1	0	0	0	1.5E2	0.404	7710	2220	Sisma Y SLD	0	10.1	0	0	1.5E2	0.404
7711	2221	Sisma X SLV	19.4	0	0	0	2.8E2	0.404	7712	2221	Sisma Y SLV	0	19.4	0	0	2.8E2	0.404
7713	2221	Sisma X SLD	19.1	0	0	0	2.8E2	0.404	7714	2221	Sisma Y SLD	0	19.1	0	0	2.8E2	0.404
7715	2222	Sisma X SLV	9.6	0	0	0	1.4E2	0.404	7716	2222	Sisma Y SLV	0	9.6	0	0	1.4E2	0.404
7717	2222	Sisma X SLD	9.4	0	0	0	1.4E2	0.404	7718	2222	Sisma Y SLD	0	9.4	0	0	1.4E2	0.404
7719	2223	Sisma X SLV	9.6	0	0	0	1.4E2	0.404	7720	2223	Sisma Y SLV	0	9.6	0	0	1.4E2	0.404
7721	2223	Sisma X SLD	9.4	0	0	0	1.4E2	0.404	7722	2223	Sisma Y SLD	0	9.4	0	0	1.4E2	0.404
7723	2224	Sisma X SLV	9.9	0	0	0	1.4E2	0.405	7724	2224	Sisma Y SLV	0	9.9	0	0	1.4E2	0.405
7725	2224	Sisma X SLD	9.8	0	0	0	1.4E2	0.405	7726	2224	Sisma Y SLD	0	9.8	0	0	1.4E2	0.405
7727	2225	Sisma X SLV	9.9	0	0	0	1.4E2	0.405	7728	2225	Sisma Y SLV	0	9.9	0	0	1.4E2	0.405
7729	2225	Sisma X SLD	9.8	0	0	0	1.4E2	0.405	7730	2225	Sisma Y SLD	0	9.8	0	0	1.4E2	0.405
7731	2226	Sisma X SLV	10.9	0	0	0	1.6E2	0.405	7732	2226	Sisma Y SLV	0	10.9	0	0	1.6E2	0.405
7733	2226	Sisma X SLD	10.7	0	0	0	1.6E2	0.405	7734	2226	Sisma Y SLD	0	10.7	0	0	1.6E2	0.405
7735	2227	Sisma X SLV	18.9	0	0	0	2.7E2	0.406	7736	2227	Sisma Y SLV	0	18.9	0	0	2.7E2	0.406
7737	2227	Sisma X SLD	18.6	0	0	0	2.7E2	0.406	7738	2227	Sisma Y SLD	0	18.6	0	0	2.7E2	0.406
7739	2228	Sisma X SLV	19.3	0	0	0	2.8E2	0.406	7740	2228	Sisma Y SLV	0	19.3	0	0	2.8E2	0.406
7741	2228	Sisma X SLD	19	0	0	0	2.8E2	0.406	7742	2228	Sisma Y SLD	0	19	0	0	2.8E2	0.406
7743	2229	Sisma X SLV	11.3	0	0	0	162.06	0.409	7744	2229	Sisma Y SLV	0	11.3	0	0	162.06	0.409
7745	2229	Sisma X SLD	11.1	0	0	0	162.06	0.409	7746	2229	Sisma Y SLD	0	11.1	0	0	162.06	0.409
7747	2230	Sisma X SLV	21.3	0	0	0	305.5	0.409	7748	2230	Sisma Y SLV	0	21.3	0	0	305.5	0.409
7749	2230	Sisma X SLD	21	0	0	0	305.5	0.409	7750	2230	Sisma Y SLD	0	21	0	0	305.5	0.409
7751	2231	Sisma X SLV	5.2	0	0	0	73.8	0.41	7752	2231	Sisma Y SLV	0	5.2	0	0	73.8	0.41
7753	2231	Sisma X SLD	5.1	0	0	0	73.8	0.41	7754	2231	Sisma Y SLD	0	5.1	0	0	73.8	0.41
7755	2232	Sisma X SLV	24.6	0	0	0	3.5E2	0.41	7756	2232	Sisma Y SLV	0	24.6	0	0	3.5E2	0.41
7757	2232	Sisma X SLD	24.2	0	0	0	3.5E2	0.41	7758	2232	Sisma Y SLD	0	24.2	0	0	3.5E2	0.41
7759	2233	Sisma X SLV	23.3	0	0	0	3.3E2	0.411	7760	2233	Sisma Y SLV	0	23.3	0	0	3.3E2	0.411
7761	2233	Sisma X SLD	22.9	0	0	0	3.3E2	0.411	7762	2233	Sisma Y SLD	0	22.9	0	0	3.3E2	0.411
7763	2234	Sisma X SLV	26.6	0	0	0	3.8E2	0.411	7764	2234	Sisma Y SLV	0	26.6	0	0	3.8E2	0.411
7765	2234	Sisma X SLD	26.2	0	0	0	3.8E2	0.411	7766	2234	Sisma Y SLD	0	26.2	0	0	3.8E2	0.411
7767	2235	Sisma X SLV	25.9	0	0	0	3.7E2	0.411	7768	2235	Sisma Y SLV	0	25.9	0	0	3.7E2	0.411
7769	2235	Sisma X SLD	25.5	0	0	0	3.7E2	0.411	7770	2235	Sisma Y SLD	0	25.5	0	0	3.7E2	0.411
7771	2236	Sisma X SLV	18.8	0	0	0	267.72	0.411	7772	2236	Sisma Y SLV	0	18.8	0	0	267.72	0.411
7773	2236	Sisma X SLD	18.5	0	0	0	267.72	0.411	7774	2236	Sisma Y SLD	0	18.5	0	0	267.72	0.411
7775	2237	Sisma X SLV	21.7	0	0	0	3.1E2	0.411	7776	2237	Sisma Y SLV	0	21.7	0	0	3.1E2	0.411
7777	2237	Sisma X SLD	21.4	0	0	0	3.1E2	0.411	7778	2237	Sisma Y SLD	0	21.4	0	0	3.1E2	0.411
7779	2238	Sisma X SLV	10.3	0	0	0	1.5E2	0.411	7780	2238	Sisma Y SLV	0	10.3	0	0	1.5E2	0.411
7781	2238	Sisma X SLD	10.1	0	0	0	1.5E2	0.411	7782	2238	Sisma Y SLD	0	10.1	0	0	1.5E2	0.411
7783	2239	Sisma X SLV	18.9	0	0	0	2.7E2	0.412	7784	2239	Sisma Y SLV	0	18.9	0	0	2.7E2	0.412
7785	2239	Sisma X SLD	18.6	0	0	0	2.7E2	0.412	7786	2239	Sisma Y SLD	0	18.6	0	0	2.7E2	0.412
7787	2240	Sisma X SLV	10	0	0	0	1.4E2	0.412	7788	2240	Sisma Y SLV	0	10	0	0	1.4E2	0.412
7789	2240	Sisma X SLD	9.8	0	0	0	1.4E2	0.412	7790	2240	Sisma Y SLD	0	9.8	0	0	1.4E2	0.412
7791	2241	Sisma X SLV	10	0	0	0	1.4E2	0.412	7792	2241	Sisma Y SLV	0	10	0	0	1.4E2	0.412
7793	2241	Sisma X SLD	9.8	0	0	0	1.4E2	0.412	7794	2241	Sisma Y SLD	0	9.8	0	0	1.4E2	0.412
7795	2242	Sisma X SLV	11	0	0	0	156.35	0.412	7796	2242	Sisma Y SLV	0	11	0	0	156.35	0.412
7797	2242	Sisma X SLD	10.8	0	0	0	156.35	0.412	7798	2242	Sisma Y SLD	0	10.8	0	0	156.35	0.412
7799	2243	Sisma X SLV	19	0	0	0	2.7E2	0.413	7800	2243	Sisma Y SLV	0	19	0	0	2.7E2	0.413
7801	2243	Sisma X SLD	18.7	0	0	0	2.7E2	0.413	7802	2243	Sisma Y SLD	0	18.7	0	0	2.7E2	0.413
7803	2244	Sisma X SLV	5.9	0	0	0	83.477	0.416	7804	2244	Sisma Y SLV	0	5.9	0	0	83.477	0.416
7805	2244	Sisma X SLD	5.8	0	0	0	83.477	0.416	7806	2244	Sisma Y SLD	0	5.8	0	0	83.477	0.416
7807	2245	Sisma X SLV	8.5	0	0	0	1.2E2	0.417	7808	2245	Sisma Y SLV	0	8.5	0	0	1.2E2	0.417
7809	2245	Sisma X SLD	8.4	0	0	0	1.2E2	0.417	7810	2245	Sisma Y SLD	0	8.4	0	0	1.2E2	0.417
7811	2246	Sisma X SLV	8.9	0	0	0	1.2E2	0.419	7812	2246	Sisma Y SLV	0	8.9	0	0	1.2E2	0.419
7813	2246	Sisma X SLD	8.8	0	0	0	1.2E2	0.419	7814	2246	Sisma Y SLD	0	8.8	0	0	1.2E2	0.419
7815	2247	Sisma X SLV	19.3	0	0	0	2.7E2	0.42	7816	2247	Sisma Y SLV	0	19.3	0	0	2.7E2	0.42
7817	2247	Sisma X SLD	19	0	0	0	2.7E2	0.42	7818	2247	Sisma Y SLD	0	19	0	0	2.7E2	0.42
7819	2248	Sisma X SLV	2.3	0	0	0	31.655	0.42	7820	2248	Sisma Y SLV	0	2.3	0	0	31.655	0.42
7821	2248	Sisma X SLD	2.2	0	0	0	31.655	0.42	7822	2248	Sisma Y SLD	0	2.2	0	0	31.655	0.42
7823	2249	Sisma X SLV	11.4	0	0	0	1.6E2	0.421	7824	2249	Sisma Y SLV	0	11.4	0	0	1.6E2	0.421
7825	2249	Sisma X SLD	11.2	0	0	0	1.6E2	0.421	7826	2249	Sisma Y SLD	0	11.2	0	0	1.6E2	0.421
7827	2250	Sisma X SLV	21.9	0	0	0	3.0E2	0.421	7828	2250	Sisma Y SLV	0	21.9	0	0	3.0E2	0.421
7829	2250	Sisma X SLD	21.5	0	0	0	3.0E2	0.421	7830	2250	Sisma Y SLD	0	21.5	0	0	3.0E2	0.421
7831	2251	Sisma X SLV	25.2	0	0	0	3.5E2	0.422	7832	2251	Sisma Y SLV	0	25.2	0	0	3.5E2	0.422
7833	2251	Sisma X SLD	24.8	0	0	0	3.5E2	0.422	7834	2251	Sisma Y SLD	0	24.8	0	0	3.5E2	0.422
7835	2252	Sisma X SLV	22	0	0	0	305.03	0.422	7836	2252	Sisma Y SLV	0	22	0	0	305.03	0.422
7837	2252	Sisma X SLD	21.6	0	0	0	305.03	0.422	7838	2252	Sisma Y SLD	0	21.6	0	0	305.03	0.422
7839	2253	Sisma X SLV	10.2	0	0	0	1.4E2	0.422	7840	2253	Sisma Y SLV	0	10.2	0	0	1.4E2	0.422
7841	2253	Sisma X SLD	10	0	0	0	1.4E2	0.422	7842	2253	Sisma Y SLD	0	10	0	0	1.4E2	0.422
7843	2254	Sisma X SLV	10	0	0	0	1.4E2	0.422	7844	2254	Sisma Y SLV	0	10	0	0	1.4E2	0.422
7845	2254	Sisma X SLD	9.8	0	0	0	1.4E2	0.422	7846	2254	Sisma Y SLD	0	9.8	0	0	1.4E2	0.422
7847	2255	Sisma X SLV	10	0	0	0	1.4E2	0.422	7848	2255	Sisma Y SLV	0	10	0	0	1.4E2	0.422
7849	2255	Sisma X SLD	9.8	0	0	0	1.4E2	0.422	7850	2255	Sisma Y SLD	0	9.8	0	0	1.4E2	0.422
7851	2256	Sisma X SLV	17.9	0	0	0	2.5E2	0.422	7852	2256	Sisma Y SLV	0	17.9	0	0	2.5E2	0.422
7853	2256	Sisma X SLD	17.7	0	0	0	2.5E2	0.422	7854	2256	Sisma Y SLD	0	17.7	0	0	2.5E2	0.422
7855	2257	Sisma X SLV	11.4	0	0	0	157.98	0.423	7856	2257	Sisma Y SLV	0	11.4	0	0	157.98	0.423
7857	2257	Sisma X SLD	11.2	0	0	0	157.98	0.423	7858	2257	Sisma Y SLD	0	11.2	0	0	157.98	0.423
7859	2258	Sisma X SLV	18.9	0	0	0	2.6E2	0.423	7860	2258	Sisma Y SLV	0	18.9	0	0	2.6E2	0.423
7861	2258	Sisma X SLD	18.6	0	0	0	2.6E2	0.423	7862	2258	Sisma Y SLD	0	18.6	0	0	2.6E2	0.423
7863	2259	Sisma X SLV	3.4	0	0	0	46.466	0.425	7864	2259	Sisma Y SLV	0	3.4	0	0	46.466	0.425
7865	2259	Sisma X SLD	3.3	0	0	0	46.466	0.425	7866	2259	Sisma Y SLD	0	3.3	0	0	46.466	0.425
7867	2260	Sisma X SLV	6.6	0	0	0	89.79	0.429	7868	2260	Sisma Y SLV	0	6.6	0	0	89.79	0.429
7869	2260	Sisma X SLD	6.5	0	0	0	89.79	0.429	7870	2260	Sisma Y SLD	0	6.5	0	0	89.79	0.429
7871	2261	Sisma X SLV	4	0	0	0	54.767	0.43	7872	2261	Sisma Y SLV	0	4	0	0	54.767	0.43
7873	2261	Sisma X SLD	4	0	0	0	54.767	0.43	7874	2261	Sisma Y SLD	0	4	0	0	54.767	0.43
7875	2262	Sisma X SLV	10.3	0	0	0	1.4E2	0.43	7876	2262	Sisma Y SLV	0	10.3	0	0	1.4E2	0.43
7877	2262	Sisma X SLD	10.1	0	0	0	1.4E2	0.43	7878	2262	Sisma Y SLD	0	10.1	0	0	1.4E2	0.43
7879	2263	Sisma X SLV	12.1	0	0	0	1.6E2	0.432	7880	2263	Sisma Y SLV	0	12.1	0	0	1.6E2	0.432
7881	2263	Sisma X SLD	11.9	0	0	0	1.6E2	0.432	7882	2263	Sisma Y SLD	0	11.9	0	0	1.6E2	0.432
7883	2264	Sisma X SLV	4.2	0	0	0	57.322	0.433	7884	2264	Sisma Y SLV	0	4.2	0	0	57.322	0.433
7885	2264	Sisma X SLD	4.2	0	0	0	57.322	0.433	7886	2264	Sisma Y SLD	0	4.2	0	0	57.322	0.433
7887	2265	Sisma X SLV	15.2	0	0	0	2.0E2	0.44	7888	2265	Sisma Y SLV	0	15.2	0	0	2.0E2	0.44
7889	2265	Sisma X SLD	15	0	0	0	2.0E2	0.44	7890	2265	Sisma Y SLD	0	15	0	0	2.0E2	0.44
7891	2266	Sisma X SLV	14.1	0	0	0	1.9E2	0.442	7892	2266	Sisma Y SLV	0	14.1	0	0	1.9E2	0.442
7893	2266	Sisma X SLD	13.9	0	0	0	1.9E2	0.442	7894	2266	Sisma Y SLD	0	13.9	0	0	1.9E2	0.442

Indice	Nodo	Condizione	Fx	Fy	Fz	Mz	Peso	Gamma	Indice	Nodo	Condizione	Fx	Fy	Fz	Mz	Peso	Gamma
7895	2267	Sisma X SLV	10.9	0	0	0	1.4E2	0.442	7896	2267	Sisma Y SLV	0	10.9	0	0	1.4E2	0.442
7897	2267	Sisma X SLD	10.8	0	0	0	1.4E2	0.442	7898	2267	Sisma Y SLD	0	10.8	0	0	1.4E2	0.442
7899	2268	Sisma X SLV	11	0	0	0	145.33	0.442	7900	2268	Sisma Y SLV	0	11	0	0	145.33	0.442
7901	2268	Sisma X SLD	10.8	0	0	0	145.33	0.442	7902	2268	Sisma Y SLD	0	10.8	0	0	145.33	0.442
7903	2269	Sisma X SLV	11.1	0	0	0	1.5E2	0.442	7904	2269	Sisma Y SLV	0	11.1	0	0	1.5E2	0.442
7905	2269	Sisma X SLD	10.9	0	0	0	1.5E2	0.442	7906	2269	Sisma Y SLD	0	10.9	0	0	1.5E2	0.442
7907	2270	Sisma X SLV	18.9	0	0	0	2.5E2	0.442	7908	2270	Sisma Y SLV	0	18.9	0	0	2.5E2	0.442
7909	2270	Sisma X SLD	18.6	0	0	0	2.5E2	0.442	7910	2270	Sisma Y SLD	0	18.6	0	0	2.5E2	0.442
7911	2271	Sisma X SLV	17.5	0	0	0	231.82	0.442	7912	2271	Sisma Y SLV	0	17.5	0	0	231.82	0.442
7913	2271	Sisma X SLD	17.2	0	0	0	231.82	0.442	7914	2271	Sisma Y SLD	0	17.2	0	0	231.82	0.442
7915	2272	Sisma X SLV	8	0	0	0	1.1E2	0.442	7916	2272	Sisma Y SLV	0	8	0	0	1.1E2	0.442
7917	2272	Sisma X SLD	7.8	0	0	0	1.1E2	0.442	7918	2272	Sisma Y SLD	0	7.8	0	0	1.1E2	0.442
7919	2273	Sisma X SLV	8	0	0	0	1.1E2	0.442	7920	2273	Sisma Y SLV	0	8	0	0	1.1E2	0.442
7921	2273	Sisma X SLD	7.9	0	0	0	1.1E2	0.442	7922	2273	Sisma Y SLD	0	7.9	0	0	1.1E2	0.442
7923	2274	Sisma X SLV	14.8	0	0	0	2.0E2	0.442	7924	2274	Sisma Y SLV	0	14.8	0	0	2.0E2	0.442
7925	2274	Sisma X SLD	14.5	0	0	0	2.0E2	0.442	7926	2274	Sisma Y SLD	0	14.5	0	0	2.0E2	0.442
7927	2275	Sisma X SLV	16.8	0	0	0	2.2E2	0.442	7928	2275	Sisma Y SLV	0	16.8	0	0	2.2E2	0.442
7929	2275	Sisma X SLD	16.5	0	0	0	2.2E2	0.442	7930	2275	Sisma Y SLD	0	16.5	0	0	2.2E2	0.442
7931	2276	Sisma X SLV	11.8	0	0	0	1.6E2	0.442	7932	2276	Sisma Y SLV	0	11.8	0	0	1.6E2	0.442
7933	2276	Sisma X SLD	11.6	0	0	0	1.6E2	0.442	7934	2276	Sisma Y SLD	0	11.6	0	0	1.6E2	0.442
7935	2277	Sisma X SLV	11.7	0	0	0	1.6E2	0.442	7936	2277	Sisma Y SLV	0	11.7	0	0	1.6E2	0.442
7937	2277	Sisma X SLD	11.5	0	0	0	1.6E2	0.442	7938	2277	Sisma Y SLD	0	11.5	0	0	1.6E2	0.442
7939	2278	Sisma X SLV	16.7	0	0	0	2.2E2	0.442	7940	2278	Sisma Y SLV	0	16.7	0	0	2.2E2	0.442
7941	2278	Sisma X SLD	16.4	0	0	0	2.2E2	0.442	7942	2278	Sisma Y SLD	0	16.4	0	0	2.2E2	0.442
7943	2279	Sisma X SLV	16.6	0	0	0	2.2E2	0.442	7944	2279	Sisma Y SLV	0	16.6	0	0	2.2E2	0.442
7945	2279	Sisma X SLD	16.4	0	0	0	2.2E2	0.442	7946	2279	Sisma Y SLD	0	16.4	0	0	2.2E2	0.442
7947	2280	Sisma X SLV	11.7	0	0	0	1.6E2	0.442	7948	2280	Sisma Y SLV	0	11.7	0	0	1.6E2	0.442
7949	2280	Sisma X SLD	11.5	0	0	0	1.6E2	0.442	7950	2280	Sisma Y SLD	0	11.5	0	0	1.6E2	0.442
7951	2281	Sisma X SLV	11.7	0	0	0	1.6E2	0.442	7952	2281	Sisma Y SLV	0	11.7	0	0	1.6E2	0.442
7953	2281	Sisma X SLD	11.5	0	0	0	1.6E2	0.442	7954	2281	Sisma Y SLD	0	11.5	0	0	1.6E2	0.442
7955	2282	Sisma X SLV	16.7	0	0	0	2.2E2	0.442	7956	2282	Sisma Y SLV	0	16.7	0	0	2.2E2	0.442
7957	2282	Sisma X SLD	16.5	0	0	0	2.2E2	0.442	7958	2282	Sisma Y SLD	0	16.5	0	0	2.2E2	0.442
7959	2283	Sisma X SLV	14.4	0	0	0	1.9E2	0.442	7960	2283	Sisma Y SLV	0	14.4	0	0	1.9E2	0.442
7961	2283	Sisma X SLD	14.2	0	0	0	1.9E2	0.442	7962	2283	Sisma Y SLD	0	14.2	0	0	1.9E2	0.442
7963	2284	Sisma X SLV	11.6	0	0	0	1.5E2	0.442	7964	2284	Sisma Y SLV	0	11.6	0	0	1.5E2	0.442
7965	2284	Sisma X SLD	11.4	0	0	0	1.5E2	0.442	7966	2284	Sisma Y SLD	0	11.4	0	0	1.5E2	0.442
7967	2285	Sisma X SLV	11.6	0	0	0	1.5E2	0.442	7968	2285	Sisma Y SLV	0	11.6	0	0	1.5E2	0.442
7969	2285	Sisma X SLD	11.4	0	0	0	1.5E2	0.442	7970	2285	Sisma Y SLD	0	11.4	0	0	1.5E2	0.442
7971	2286	Sisma X SLV	18.7	0	0	0	2.5E2	0.442	7972	2286	Sisma Y SLV	0	18.7	0	0	2.5E2	0.442
7973	2286	Sisma X SLD	18.4	0	0	0	2.5E2	0.442	7974	2286	Sisma Y SLD	0	18.4	0	0	2.5E2	0.442
7975	2287	Sisma X SLV	26.4	0	0	0	3.5E2	0.442	7976	2287	Sisma Y SLV	0	26.4	0	0	3.5E2	0.442
7977	2287	Sisma X SLD	26	0	0	0	3.5E2	0.442	7978	2287	Sisma Y SLD	0	26	0	0	3.5E2	0.442
7979	2288	Sisma X SLV	4.9	0	0	0	64.615	0.442	7980	2288	Sisma Y SLV	0	4.9	0	0	64.615	0.442
7981	2288	Sisma X SLD	4.8	0	0	0	64.615	0.442	7982	2288	Sisma Y SLD	0	4.8	0	0	64.615	0.442
7983	2289	Sisma X SLV	4.4	0	0	0	58.068	0.442	7984	2289	Sisma Y SLV	0	4.4	0	0	58.068	0.442
7985	2289	Sisma X SLD	4.3	0	0	0	58.068	0.442	7986	2289	Sisma Y SLD	0	4.3	0	0	58.068	0.442
7987	2290	Sisma X SLV	5.6	0	0	0	73.796	0.442	7988	2290	Sisma Y SLV	0	5.6	0	0	73.796	0.442
7989	2290	Sisma X SLD	5.5	0	0	0	73.796	0.442	7990	2290	Sisma Y SLD	0	5.5	0	0	73.796	0.442
7991	2291	Sisma X SLV	8.5	0	0	0	1.1E2	0.442	7992	2291	Sisma Y SLV	0	8.5	0	0	1.1E2	0.442
7993	2291	Sisma X SLD	8.4	0	0	0	1.1E2	0.442	7994	2291	Sisma Y SLD	0	8.4	0	0	1.1E2	0.442
7995	2292	Sisma X SLV	4.4	0	0	0	57.718	0.442	7996	2292	Sisma Y SLV	0	4.4	0	0	57.718	0.442
7997	2292	Sisma X SLD	4.3	0	0	0	57.718	0.442	7998	2292	Sisma Y SLD	0	4.3	0	0	57.718	0.442
7999	2293	Sisma X SLV	4.4	0	0	0	57.967	0.442	8000	2293	Sisma Y SLV	0	4.4	0	0	57.967	0.442
8001	2293	Sisma X SLD	4.3	0	0	0	57.967	0.442	8002	2293	Sisma Y SLD	0	4.3	0	0	57.967	0.442
8003	2294	Sisma X SLV	7.8	0	0	0	103.4	0.442	8004	2294	Sisma Y SLV	0	7.8	0	0	103.4	0.442
8005	2294	Sisma X SLD	7.7	0	0	0	103.4	0.442	8006	2294	Sisma Y SLD	0	7.7	0	0	103.4	0.442
8007	2295	Sisma X SLV	7.2	0	0	0	95.24	0.442	8008	2295	Sisma Y SLV	0	7.2	0	0	95.24	0.442
8009	2295	Sisma X SLD	7.1	0	0	0	95.24	0.442	8010	2295	Sisma Y SLD	0	7.1	0	0	95.24	0.442
8011	2296	Sisma X SLV	4.2	0	0	0	55.532	0.442	8012	2296	Sisma Y SLV	0	4.2	0	0	55.532	0.442
8013	2296	Sisma X SLD	4.1	0	0	0	55.532	0.442	8014	2296	Sisma Y SLD	0	4.1	0	0	55.532	0.442
8015	2297	Sisma X SLV	4	0	0	0	52.506	0.442	8016	2297	Sisma Y SLV	0	4	0	0	52.506	0.442
8017	2297	Sisma X SLD	3.9	0	0	0	52.506	0.442	8018	2297	Sisma Y SLD	0	3.9	0	0	52.506	0.442
8019	2298	Sisma X SLV	6.9	0	0	0	91.985	0.442	8020	2298	Sisma Y SLV	0	6.9	0	0	91.985	0.442
8021	2298	Sisma X SLD	6.8	0	0	0	91.985	0.442	8022	2298	Sisma Y SLD	0	6.8	0	0	91.985	0.442
8023	2299	Sisma X SLV	24.6	0	0	0	3.3E2	0.442	8024	2299	Sisma Y SLV	0	24.6	0	0	3.3E2	0.442
8025	2299	Sisma X SLD	24.2	0	0	0	3.3E2	0.442	8026	2299	Sisma Y SLD	0	24.2	0	0	3.3E2	0.442
8027	2300	Sisma X SLV	17.3	0	0	0	2.3E2	0.442	8028	2300	Sisma Y SLV	0	17.3	0	0	2.3E2	0.442
8029	2300	Sisma X SLD	17	0	0	0	2.3E2	0.442	8030	2300	Sisma Y SLD	0	17	0	0	2.3E2	0.442
8031	2301	Sisma X SLV	10.7	0	0	0	1.4E2	0.442	8032	2301	Sisma Y SLV	0	10.7	0	0	1.4E2	0.442
8033	2301	Sisma X SLD	10.5	0	0	0	1.4E2	0.442	8034	2301	Sisma Y SLD	0	10.5	0	0	1.4E2	0.442
8035	2302	Sisma X SLV	10.8	0	0	0	1.4E2	0.442	8036	2302	Sisma Y SLV	0	10.8	0	0	1.4E2	0.442
8037	2302	Sisma X SLD	10.6	0	0	0	1.4E2	0.442	8038	2302	Sisma Y SLD	0	10.6	0	0	1.4E2	0.442
8039	2303	Sisma X SLV	18.6	0	0	0	2.5E2	0.442	8040	2303	Sisma Y SLV	0	18.6	0	0	2.5E2	0.442
8041	2303	Sisma X SLD	18.4	0	0	0	2.5E2	0.442	8042	2303	Sisma Y SLD	0	18.4	0	0	2.5E2	0.442
8043	2304	Sisma X SLV	7.8	0	0	0	1.0E2	0.442	8044	2304	Sisma Y SLV	0	7.8	0	0	1.0E2	0.442
8045	2304	Sisma X SLD	7.6	0	0	0	1.0E2	0.442	8046	2304	Sisma Y SLD	0	7.6	0	0	1.0E2	0.442
8047	2305	Sisma X SLV	10.7	0	0	0	1.4E2	0.442	8048	2305	Sisma Y SLV	0	10.7	0	0	1.4E2	0.442
8049	2305	Sisma X SLD	10.6	0	0	0	1.4E2	0.442	8050	2305	Sisma Y SLD	0	10.6	0	0	1.4E2	0.442
8051	2306	Sisma X SLV	8.3	0	0	0	1.1E2	0.442	8052	2306	Sisma Y SLV	0	8.3	0	0	1.1E2	0.442
8053	2306	Sisma X SLD	8.2	0	0	0	1.1E2	0.442	8054	2306	Sisma Y SLD	0	8.2	0	0	1.1E2	0.442
8055	2307	Sisma X SLV	8.1	0	0	0	1.1E2	0.442	8056	2307	Sisma Y SLV	0	8.1	0	0	1.1E2	0.442
8057	2307	Sisma X SLD	8	0	0	0	1.1E2	0.442	8058	2307	Sisma Y SLD	0	8	0	0	1.1E2	0.442
8059	2308	Sisma X SLV	17.7	0	0	0	2.4E2	0.442	8060	2308	Sisma Y SLV	0	17.7	0	0	2.4E2	0.442
8061	2308	Sisma X SLD	17.5	0	0	0	2.4E2	0.442	8062	2308	Sisma Y SLD	0	17.5	0	0	2.4E2	0.442
8063	2309	Sisma X SLV	8.4	0	0	0	1.1E2	0.442	8064	2309	Sisma Y SLV	0	8.4	0	0	1.1E2	0.442
8065	2309	Sisma X SLD	8.2	0	0	0	1.1E2	0.442	8066	2309	Sisma Y SLD	0	8.2	0	0	1.1E2	0.442
8067	2310	Sisma X SLV	10.1	0	0	0	1.3E2	0.442	8068	2310	Sisma Y SLV	0	10.1	0	0	1.3E2	0.442
8069	2310	Sisma X SLD	9.9	0	0	0	1.3E2	0.442	8070	2310	Sisma Y SLD	0	9.9	0	0	1.3E2	0.442
8071	2311	Sisma X SLV	15.4	0	0	0	2.0E2	0.442	8072	2311	Sisma Y SLV	0	15.4	0	0	2.0E2	0.442
8073	2311	Sisma X SLD	15.1	0	0	0	2.0E2	0.442	8074	2311	Sisma Y SLD	0	15.1	0	0	2.0E2	0.442
8075	2312	Sisma X SLV	18.8	0	0	0	2.5E2	0.442	8076	2312	Sisma Y SLV	0	18.8	0	0	2.5E2	0.442
8077	2312	Sisma X SLD	18.5	0	0	0	2.5E2	0.442	8078	2312	Sisma Y SLD	0	18.5	0	0	2.5E2	0.442
8079	2313	Sisma X SLV	8.7	0	0	0	115.11	0.442	8080	2313	Sisma Y SLV	0	8.7	0	0	115.11	0.442
8081	2313	Sisma X SLD	8.5	0	0	0	115.11	0.442	8082	2313	Sisma Y SLD	0	8.5	0	0	115.11	0.442
8083	2314	Sisma X SLV	7	0	0	0	93.419	0.442	8084	2314	Sisma Y SLV	0	7	0	0	93.419	0.442
8085	2314	Sisma X SLD	6.9	0	0	0	93.419	0.442	8086	2314	Sisma Y SLD	0	6.9	0	0	93.419	0.442
8087	2315	Sisma X SLV	13.7	0	0	0	182.26	0.442	8088	2315	Sisma Y SLV	0	13.7	0	0	182.26	0.442
8089	2315	Sisma X SLD	13.5	0	0	0	182.26	0.442	8090	2315	Sisma Y SLD	0	13.5	0	0	182.26	0.442
8091	2316	Sisma X SLV	8.9	0	0	0	1.2E2	0.442	8092	2316	Sisma Y SLV	0	8.9	0	0	1.2E2	0.442
8093	2316	Sisma X SLD	8.8	0	0	0	1.2E2	0.442	8094	2316	Sisma Y SLD	0	8.8	0	0	1.2E2	0.442
8095	2317	Sisma X SLV	17.2	0	0	0	2.3E2	0.442	8096	2317	Sisma Y SLV	0	17.2	0	0	2.3E2	0.442
8097	2317	Sisma X SLD	16.9	0	0	0	2.3E2	0.442	8098	2317	Sisma Y SLD	0	16.9	0	0	2.3E2	0.442
8099	2318	Sisma X SLV	19.6	0	0	0	2.6E2	0.442	8100	2318	Sisma Y SLV	0	19.6	0	0	2.6E2	0.442
8101	2318	Sisma X SLD	19.3	0	0	0	2.6E2	0.442	8102	2318	Sisma Y SLD	0	19.3	0	0	2.6E2	0.442

Indice	Nodo	Condizione	Fx	Fy	Fz	Mz	Peso	Gamma	Indice	Nodo	Condizione	Fx	Fy	Fz	Mz	Peso	Gamma
8103	2319	Sisma X SLV	5.8	0	0	0	77.588	0.442	8104	2319	Sisma Y SLV	0	5.8	0	0	77.588	0.442
8105	2319	Sisma X SLD	5.8	0	0	0	77.588	0.442	8106	2319	Sisma Y SLD	0	5.8	0	0	77.588	0.442
8107	2320	Sisma X SLV	3.6	0	0	0	48.192	0.442	8108	2320	Sisma Y SLV	0	3.6	0	0	48.192	0.442
8109	2320	Sisma X SLD	3.6	0	0	0	48.192	0.442	8110	2320	Sisma Y SLD	0	3.6	0	0	48.192	0.442
8111	2321	Sisma X SLV	3.7	0	0	0	49.254	0.442	8112	2321	Sisma Y SLV	0	3.7	0	0	49.254	0.442
8113	2321	Sisma X SLD	3.7	0	0	0	49.254	0.442	8114	2321	Sisma Y SLD	0	3.7	0	0	49.254	0.442
8115	2322	Sisma X SLV	7.5	0	0	0	99.2	0.442	8116	2322	Sisma Y SLV	0	7.5	0	0	99.2	0.442
8117	2322	Sisma X SLD	7.4	0	0	0	99.2	0.442	8118	2322	Sisma Y SLD	0	7.4	0	0	99.2	0.442
8119	2323	Sisma X SLV	7.2	0	0	0	95.24	0.442	8120	2323	Sisma Y SLV	0	7.2	0	0	95.24	0.442
8121	2323	Sisma X SLD	7.1	0	0	0	95.24	0.442	8122	2323	Sisma Y SLD	0	7.1	0	0	95.24	0.442
8123	2324	Sisma X SLV	4.2	0	0	0	55.532	0.442	8124	2324	Sisma Y SLV	0	4.2	0	0	55.532	0.442
8125	2324	Sisma X SLD	4.1	0	0	0	55.532	0.442	8126	2324	Sisma Y SLD	0	4.1	0	0	55.532	0.442
8127	2325	Sisma X SLV	4	0	0	0	52.506	0.442	8128	2325	Sisma Y SLV	0	4	0	0	52.506	0.442
8129	2325	Sisma X SLD	3.9	0	0	0	52.506	0.442	8130	2325	Sisma Y SLD	0	3.9	0	0	52.506	0.442
8131	2326	Sisma X SLV	6.9	0	0	0	91.985	0.442	8132	2326	Sisma Y SLV	0	6.9	0	0	91.985	0.442
8133	2326	Sisma X SLD	6.8	0	0	0	91.985	0.442	8134	2326	Sisma Y SLD	0	6.8	0	0	91.985	0.442
8135	2327	Sisma X SLV	30.5	0	0	0	4.0E2	0.442	8136	2327	Sisma Y SLV	0	30.5	0	0	4.0E2	0.442
8137	2327	Sisma X SLD	30	0	0	0	4.0E2	0.442	8138	2327	Sisma Y SLD	0	30	0	0	4.0E2	0.442
8139	2328	Sisma X SLV	19.1	0	0	0	2.5E2	0.442	8140	2328	Sisma Y SLV	0	19.1	0	0	2.5E2	0.442
8141	2328	Sisma X SLD	18.8	0	0	0	2.5E2	0.442	8142	2328	Sisma Y SLD	0	18.8	0	0	2.5E2	0.442
8143	2329	Sisma X SLV	8	0	0	0	1.1E2	0.442	8144	2329	Sisma Y SLV	0	8	0	0	1.1E2	0.442
8145	2329	Sisma X SLD	7.9	0	0	0	1.1E2	0.442	8146	2329	Sisma Y SLD	0	7.9	0	0	1.1E2	0.442
8147	2330	Sisma X SLV	8.2	0	0	0	109.43	0.442	8148	2330	Sisma Y SLV	0	8.2	0	0	109.43	0.442
8149	2330	Sisma X SLD	8.1	0	0	0	109.43	0.442	8150	2330	Sisma Y SLD	0	8.1	0	0	109.43	0.442
8151	2331	Sisma X SLV	18.5	0	0	0	2.5E2	0.442	8152	2331	Sisma Y SLV	0	18.5	0	0	2.5E2	0.442
8153	2331	Sisma X SLD	18.2	0	0	0	2.5E2	0.442	8154	2331	Sisma Y SLD	0	18.2	0	0	2.5E2	0.442
8155	2332	Sisma X SLV	17.3	0	0	0	2.3E2	0.442	8156	2332	Sisma Y SLV	0	17.3	0	0	2.3E2	0.442
8157	2332	Sisma X SLD	17.1	0	0	0	2.3E2	0.442	8158	2332	Sisma Y SLD	0	17.1	0	0	2.3E2	0.442
8159	2333	Sisma X SLV	17.9	0	0	0	2.4E2	0.442	8160	2333	Sisma Y SLV	0	17.9	0	0	2.4E2	0.442
8161	2333	Sisma X SLD	17.6	0	0	0	2.4E2	0.442	8162	2333	Sisma Y SLD	0	17.6	0	0	2.4E2	0.442
8163	2334	Sisma X SLV	11.9	0	0	0	1.6E2	0.442	8164	2334	Sisma Y SLV	0	11.9	0	0	1.6E2	0.442
8165	2334	Sisma X SLD	11.7	0	0	0	1.6E2	0.442	8166	2334	Sisma Y SLD	0	11.7	0	0	1.6E2	0.442
8167	2335	Sisma X SLV	11.8	0	0	0	1.6E2	0.442	8168	2335	Sisma Y SLV	0	11.8	0	0	1.6E2	0.442
8169	2335	Sisma X SLD	11.6	0	0	0	1.6E2	0.442	8170	2335	Sisma Y SLD	0	11.6	0	0	1.6E2	0.442
8171	2336	Sisma X SLV	11.9	0	0	0	1.6E2	0.442	8172	2336	Sisma Y SLV	0	11.9	0	0	1.6E2	0.442
8173	2336	Sisma X SLD	11.7	0	0	0	1.6E2	0.442	8174	2336	Sisma Y SLD	0	11.7	0	0	1.6E2	0.442
8175	2337	Sisma X SLV	11.8	0	0	0	1.6E2	0.442	8176	2337	Sisma Y SLV	0	11.8	0	0	1.6E2	0.442
8177	2337	Sisma X SLD	11.6	0	0	0	1.6E2	0.442	8178	2337	Sisma Y SLD	0	11.6	0	0	1.6E2	0.442
8179	2338	Sisma X SLV	18.4	0	0	0	2.4E2	0.442	8180	2338	Sisma Y SLV	0	18.4	0	0	2.4E2	0.442
8181	2338	Sisma X SLD	18.1	0	0	0	2.4E2	0.442	8182	2338	Sisma Y SLD	0	18.1	0	0	2.4E2	0.442
8183	2339	Sisma X SLV	16.7	0	0	0	2.2E2	0.442	8184	2339	Sisma Y SLV	0	16.7	0	0	2.2E2	0.442
8185	2339	Sisma X SLD	16.5	0	0	0	2.2E2	0.442	8186	2339	Sisma Y SLD	0	16.5	0	0	2.2E2	0.442
8187	2340	Sisma X SLV	16.7	0	0	0	2.2E2	0.442	8188	2340	Sisma Y SLV	0	16.7	0	0	2.2E2	0.442
8189	2340	Sisma X SLD	16.4	0	0	0	2.2E2	0.442	8190	2340	Sisma Y SLD	0	16.4	0	0	2.2E2	0.442
8191	2341	Sisma X SLV	11.7	0	0	0	1.5E2	0.442	8192	2341	Sisma Y SLV	0	11.7	0	0	1.5E2	0.442
8193	2341	Sisma X SLD	11.5	0	0	0	1.5E2	0.442	8194	2341	Sisma Y SLD	0	11.5	0	0	1.5E2	0.442
8195	2342	Sisma X SLV	11.6	0	0	0	1.5E2	0.442	8196	2342	Sisma Y SLV	0	11.6	0	0	1.5E2	0.442
8197	2342	Sisma X SLD	11.4	0	0	0	1.5E2	0.442	8198	2342	Sisma Y SLD	0	11.4	0	0	1.5E2	0.442
8199	2343	Sisma X SLV	16.1	0	0	0	2.1E2	0.442	8200	2343	Sisma Y SLV	0	16.1	0	0	2.1E2	0.442
8201	2343	Sisma X SLD	15.9	0	0	0	2.1E2	0.442	8202	2343	Sisma Y SLD	0	15.9	0	0	2.1E2	0.442
8203	2344	Sisma X SLV	16.3	0	0	0	2.2E2	0.442	8204	2344	Sisma Y SLV	0	16.3	0	0	2.2E2	0.442
8205	2344	Sisma X SLD	16	0	0	0	2.2E2	0.442	8206	2344	Sisma Y SLD	0	16	0	0	2.2E2	0.442
8207	2345	Sisma X SLV	8.2	0	0	0	1.1E2	0.442	8208	2345	Sisma Y SLV	0	8.2	0	0	1.1E2	0.442
8209	2345	Sisma X SLD	8.1	0	0	0	1.1E2	0.442	8210	2345	Sisma Y SLD	0	8.1	0	0	1.1E2	0.442
8211	2346	Sisma X SLV	8.2	0	0	0	1.1E2	0.442	8212	2346	Sisma Y SLV	0	8.2	0	0	1.1E2	0.442
8213	2346	Sisma X SLD	8.1	0	0	0	1.1E2	0.442	8214	2346	Sisma Y SLD	0	8.1	0	0	1.1E2	0.442
8215	2347	Sisma X SLV	13.7	0	0	0	1.8E2	0.442	8216	2347	Sisma Y SLV	0	13.7	0	0	1.8E2	0.442
8217	2347	Sisma X SLD	13.5	0	0	0	1.8E2	0.442	8218	2347	Sisma Y SLD	0	13.5	0	0	1.8E2	0.442
8219	2348	Sisma X SLV	13.7	0	0	0	1.8E2	0.442	8220	2348	Sisma Y SLV	0	13.7	0	0	1.8E2	0.442
8221	2348	Sisma X SLD	13.5	0	0	0	1.8E2	0.442	8222	2348	Sisma Y SLD	0	13.5	0	0	1.8E2	0.442
8223	2349	Sisma X SLV	8.1	0	0	0	1.1E2	0.442	8224	2349	Sisma Y SLV	0	8.1	0	0	1.1E2	0.442
8225	2349	Sisma X SLD	8	0	0	0	1.1E2	0.442	8226	2349	Sisma Y SLD	0	8	0	0	1.1E2	0.442
8227	2350	Sisma X SLV	7.8	0	0	0	1.0E2	0.442	8228	2350	Sisma Y SLV	0	7.8	0	0	1.0E2	0.442
8229	2350	Sisma X SLD	7.7	0	0	0	1.0E2	0.442	8230	2350	Sisma Y SLD	0	7.7	0	0	1.0E2	0.442
8231	2351	Sisma X SLV	13.6	0	0	0	1.8E2	0.442	8232	2351	Sisma Y SLV	0	13.6	0	0	1.8E2	0.442
8233	2351	Sisma X SLD	13.3	0	0	0	1.8E2	0.442	8234	2351	Sisma Y SLD	0	13.3	0	0	1.8E2	0.442
8235	2352	Sisma X SLV	7.4	0	0	0	97.748	0.443	8236	2352	Sisma Y SLV	0	7.4	0	0	97.748	0.443
8237	2352	Sisma X SLD	7.3	0	0	0	97.748	0.443	8238	2352	Sisma Y SLD	0	7.3	0	0	97.748	0.443
8239	2353	Sisma X SLV	23.9	0	0	0	3.1E2	0.444	8240	2353	Sisma Y SLV	0	23.9	0	0	3.1E2	0.444
8241	2353	Sisma X SLD	23.5	0	0	0	3.1E2	0.444	8242	2353	Sisma Y SLD	0	23.5	0	0	3.1E2	0.444
8243	2354	Sisma X SLV	23.5	0	0	0	3.1E2	0.444	8244	2354	Sisma Y SLV	0	23.5	0	0	3.1E2	0.444
8245	2354	Sisma X SLD	23.1	0	0	0	3.1E2	0.444	8246	2354	Sisma Y SLD	0	23.1	0	0	3.1E2	0.444
8247	2355	Sisma X SLV	21.5	0	0	0	2.8E2	0.445	8248	2355	Sisma Y SLV	0	21.5	0	0	2.8E2	0.445
8249	2355	Sisma X SLD	21.1	0	0	0	2.8E2	0.445	8250	2355	Sisma Y SLD	0	21.1	0	0	2.8E2	0.445
8251	2356	Sisma X SLV	21.3	0	0	0	2.8E2	0.445	8252	2356	Sisma Y SLV	0	21.3	0	0	2.8E2	0.445
8253	2356	Sisma X SLD	21	0	0	0	2.8E2	0.445	8254	2356	Sisma Y SLD	0	21	0	0	2.8E2	0.445
8255	2357	Sisma X SLV	22.7	0	0	0	3.0E2	0.445	8256	2357	Sisma Y SLV	0	22.7	0	0	3.0E2	0.445
8257	2357	Sisma X SLD	22.3	0	0	0	3.0E2	0.445	8258	2357	Sisma Y SLD	0	22.3	0	0	3.0E2	0.445
8259	2358	Sisma X SLV	24.7	0	0	0	3.3E2	0.445	8260	2358	Sisma Y SLV	0	24.7	0	0	3.3E2	0.445
8261	2358	Sisma X SLD	24.3	0	0	0	3.3E2	0.445	8262	2358	Sisma Y SLD	0	24.3	0	0	3.3E2	0.445
8263	2359	Sisma X SLV	24.3	0	0	0	3.2E2	0.446	8264	2359	Sisma Y SLV	0	24.3	0	0	3.2E2	0.446
8265	2359	Sisma X SLD	24	0	0	0	3.2E2	0.446	8266	2359	Sisma Y SLD	0	24	0	0	3.2E2	0.446
8267	2360	Sisma X SLV	21.8	0	0	0	2.9E2	0.446	8268	2360	Sisma Y SLV	0	21.8	0	0	2.9E2	0.446
8269	2360	Sisma X SLD	21.5	0	0	0	2.9E2	0.446	8270	2360	Sisma Y SLD	0	21.5	0	0	2.9E2	0.446
8271	2361	Sisma X SLV	22.9	0	0	0	3.0E2	0.446	8272	2361	Sisma Y SLV	0	22.9	0	0	3.0E2	0.446
8273	2361	Sisma X SLD	22.5	0	0	0	3.0E2	0.446	8274	2361	Sisma Y SLD	0	22.5	0	0	3.0E2	0.446
8275	2362	Sisma X SLV	21.5	0	0	0	2.8E2	0.446	8276	2362	Sisma Y SLV	0	21.5	0	0	2.8E2	0.446
8277	2362	Sisma X SLD	21.1	0	0	0	2.8E2	0.446	8278	2362	Sisma Y SLD	0	21.1	0	0	2.8E2	0.446
8279	2363	Sisma X SLV	23.4	0	0	0	3.1E2	0.447	8280	2363	Sisma Y SLV	0	23.4	0	0	3.1E2	0.447
8281	2363	Sisma X SLD	23	0	0	0	3.1E2	0.447	8282	2363	Sisma Y SLD	0	23	0	0	3.1E2	0.447
8283	2364	Sisma X SLV	22.4	0	0	0	2.9E2	0.447	8284	2364	Sisma Y SLV	0	22.4	0	0	2.9E2	0.447
8285	2364	Sisma X SLD	22	0	0	0	2.9E2	0.447	8286	2364	Sisma Y SLD	0	22	0	0	2.9E2	0.447
8287	2365	Sisma X SLV	23.7	0	0	0	310.17	0.447	8288	2365	Sisma Y SLV	0	23.7	0	0	310.17	0.447
8289	2365	Sisma X SLD	23.3	0	0	0	310.17	0.447	8290	2365	Sisma Y SLD	0	23.3	0	0	310.17	0.447
8291	2366	Sisma X SLV	23.2	0	0	0	3.0E2	0.447	8292	2366	Sisma Y SLV	0	23.2	0	0	3.0E2	0.447
8293	2366	Sisma X SLD	22.8	0	0	0	3.0E2	0.447	8294	2366	Sisma Y SLD	0	22.8	0	0	3.0E2	0.447
8295	2367	Sisma X SLV	21.5	0	0	0	2.8E2	0.447	8296	2367	Sisma Y SLV	0	21.5	0	0	2.8E2	0.447
8297	2367	Sisma X SLD	21.2	0	0	0	2.8E2	0.447	8298	2367	Sisma Y SLD	0	21.2	0	0	2.8E2	0.447
8299	2368	Sisma X SLV	21.5	0	0	0	281.59	0.448	8300	2368	Sisma Y SLV	0	21.5	0	0	281.59	0.448
8301	2368	Sisma X SLD	21.2	0	0	0	281.59	0.448	8302	2368	Sisma Y SLD	0	21.2	0	0	281.59	0.448
8303	2369	Sisma X SLV	25.3	0	0	0	3.3E2	0.448	8304	2369	Sisma Y SLV	0	25.3	0	0	3.3E2	0.448

Indice	Nodo	Condizione	Fx	Fy	Fz	Mz	Peso	Gamma	Indice	Nodo	Condizione	Fx	Fy	Fz	Mz	Peso	Gamma
8305	2369	Sisma X SLD	24.9	0	0	0	3.3E2	0.448	8306	2369	Sisma Y SLD	0	24.9	0	0	3.3E2	0.448
8307	2370	Sisma X SLV	17.8	0	0	0	2.3E2	0.449	8308	2370	Sisma Y SLV	0	17.8	0	0	2.3E2	0.449
8309	2370	Sisma X SLD	17.5	0	0	0	2.3E2	0.449	8310	2370	Sisma Y SLD	0	17.5	0	0	2.3E2	0.449
8311	2371	Sisma X SLV	21.6	0	0	0	2.8E2	0.449	8312	2371	Sisma Y SLV	0	21.6	0	0	2.8E2	0.449
8313	2371	Sisma X SLD	21.3	0	0	0	2.8E2	0.449	8314	2371	Sisma Y SLD	0	21.3	0	0	2.8E2	0.449
8315	2372	Sisma X SLV	22.7	0	0	0	3.0E2	0.449	8316	2372	Sisma Y SLV	0	22.7	0	0	3.0E2	0.449
8317	2372	Sisma X SLD	22.3	0	0	0	3.0E2	0.449	8318	2372	Sisma Y SLD	0	22.3	0	0	3.0E2	0.449
8319	2373	Sisma X SLV	20.5	0	0	0	2.7E2	0.449	8320	2373	Sisma Y SLV	0	20.5	0	0	2.7E2	0.449
8321	2373	Sisma X SLD	20.2	0	0	0	2.7E2	0.449	8322	2373	Sisma Y SLD	0	20.2	0	0	2.7E2	0.449
8323	2374	Sisma X SLV	17.9	0	0	0	2.3E2	0.449	8324	2374	Sisma Y SLV	0	17.9	0	0	2.3E2	0.449
8325	2374	Sisma X SLD	17.6	0	0	0	2.3E2	0.449	8326	2374	Sisma Y SLD	0	17.6	0	0	2.3E2	0.449
8327	2375	Sisma X SLV	21.6	0	0	0	2.8E2	0.449	8328	2375	Sisma Y SLV	0	21.6	0	0	2.8E2	0.449
8329	2375	Sisma X SLD	21.2	0	0	0	2.8E2	0.449	8330	2375	Sisma Y SLD	0	21.2	0	0	2.8E2	0.449
8331	2376	Sisma X SLV	21.5	0	0	0	2.8E2	0.449	8332	2376	Sisma Y SLV	0	21.5	0	0	2.8E2	0.449
8333	2376	Sisma X SLD	21.2	0	0	0	2.8E2	0.449	8334	2376	Sisma Y SLD	0	21.2	0	0	2.8E2	0.449
8335	2377	Sisma X SLV	22.4	0	0	0	2.9E2	0.449	8336	2377	Sisma Y SLV	0	22.4	0	0	2.9E2	0.449
8337	2377	Sisma X SLD	22.1	0	0	0	2.9E2	0.449	8338	2377	Sisma Y SLD	0	22.1	0	0	2.9E2	0.449
8339	2378	Sisma X SLV	22.1	0	0	0	2.9E2	0.45	8340	2378	Sisma Y SLV	0	22.1	0	0	2.9E2	0.45
8341	2378	Sisma X SLD	21.7	0	0	0	2.9E2	0.45	8342	2378	Sisma Y SLD	0	21.7	0	0	2.9E2	0.45
8343	2379	Sisma X SLV	21.9	0	0	0	2.9E2	0.45	8344	2379	Sisma Y SLV	0	21.9	0	0	2.9E2	0.45
8345	2379	Sisma X SLD	21.6	0	0	0	2.9E2	0.45	8346	2379	Sisma Y SLD	0	21.6	0	0	2.9E2	0.45
8347	2380	Sisma X SLV	24.4	0	0	0	3.2E2	0.45	8348	2380	Sisma Y SLV	0	24.4	0	0	3.2E2	0.45
8349	2380	Sisma X SLD	24	0	0	0	3.2E2	0.45	8350	2380	Sisma Y SLD	0	24	0	0	3.2E2	0.45
8351	2381	Sisma X SLV	21.9	0	0	0	2.8E2	0.45	8352	2381	Sisma Y SLV	0	21.9	0	0	2.8E2	0.45
8353	2381	Sisma X SLD	21.5	0	0	0	2.8E2	0.45	8354	2381	Sisma Y SLD	0	21.5	0	0	2.8E2	0.45
8355	2382	Sisma X SLV	21.6	0	0	0	2.8E2	0.45	8356	2382	Sisma Y SLV	0	21.6	0	0	2.8E2	0.45
8357	2382	Sisma X SLD	21.3	0	0	0	2.8E2	0.45	8358	2382	Sisma Y SLD	0	21.3	0	0	2.8E2	0.45
8359	2383	Sisma X SLV	21.6	0	0	0	2.8E2	0.451	8360	2383	Sisma Y SLV	0	21.6	0	0	2.8E2	0.451
8361	2383	Sisma X SLD	21.3	0	0	0	2.8E2	0.451	8362	2383	Sisma Y SLD	0	21.3	0	0	2.8E2	0.451
8363	2384	Sisma X SLV	4	0	0	0	51.404	0.452	8364	2384	Sisma Y SLV	0	4	0	0	51.404	0.452
8365	2384	Sisma X SLD	3.9	0	0	0	51.404	0.452	8366	2384	Sisma Y SLD	0	3.9	0	0	51.404	0.452
8367	2385	Sisma X SLV	7.2	0	0	0	93.075	0.452	8368	2385	Sisma Y SLV	0	7.2	0	0	93.075	0.452
8369	2385	Sisma X SLD	7.1	0	0	0	93.075	0.452	8370	2385	Sisma Y SLD	0	7.1	0	0	93.075	0.452
8371	2386	Sisma X SLV	21.7	0	0	0	2.8E2	0.452	8372	2386	Sisma Y SLV	0	21.7	0	0	2.8E2	0.452
8373	2386	Sisma X SLD	21.3	0	0	0	2.8E2	0.452	8374	2386	Sisma Y SLD	0	21.3	0	0	2.8E2	0.452
8375	2387	Sisma X SLV	23.9	0	0	0	3.1E2	0.452	8376	2387	Sisma Y SLV	0	23.9	0	0	3.1E2	0.452
8377	2387	Sisma X SLD	23.5	0	0	0	3.1E2	0.452	8378	2387	Sisma Y SLD	0	23.5	0	0	3.1E2	0.452
8379	2388	Sisma X SLV	19.2	0	0	0	2.5E2	0.453	8380	2388	Sisma Y SLV	0	19.2	0	0	2.5E2	0.453
8381	2388	Sisma X SLD	18.9	0	0	0	2.5E2	0.453	8382	2388	Sisma Y SLD	0	18.9	0	0	2.5E2	0.453
8383	2389	Sisma X SLV	3.2	0	0	0	41.107	0.453	8384	2389	Sisma Y SLV	0	3.2	0	0	41.107	0.453
8385	2389	Sisma X SLD	3.1	0	0	0	41.107	0.453	8386	2389	Sisma Y SLD	0	3.1	0	0	41.107	0.453
8387	2390	Sisma X SLV	21.7	0	0	0	2.8E2	0.453	8388	2390	Sisma Y SLV	0	21.7	0	0	2.8E2	0.453
8389	2390	Sisma X SLD	21.4	0	0	0	2.8E2	0.453	8390	2390	Sisma Y SLD	0	21.4	0	0	2.8E2	0.453
8391	2391	Sisma X SLV	22.9	0	0	0	3.0E2	0.453	8392	2391	Sisma Y SLV	0	22.9	0	0	3.0E2	0.453
8393	2391	Sisma X SLD	22.5	0	0	0	3.0E2	0.453	8394	2391	Sisma Y SLD	0	22.5	0	0	3.0E2	0.453
8395	2392	Sisma X SLV	20.9	0	0	0	2.7E2	0.453	8396	2392	Sisma Y SLV	0	20.9	0	0	2.7E2	0.453
8397	2392	Sisma X SLD	20.6	0	0	0	2.7E2	0.453	8398	2392	Sisma Y SLD	0	20.6	0	0	2.7E2	0.453
8399	2393	Sisma X SLV	21.7	0	0	0	2.8E2	0.453	8400	2393	Sisma Y SLV	0	21.7	0	0	2.8E2	0.453
8401	2393	Sisma X SLD	21.3	0	0	0	2.8E2	0.453	8402	2393	Sisma Y SLD	0	21.3	0	0	2.8E2	0.453
8403	2394	Sisma X SLV	19.2	0	0	0	2.5E2	0.453	8404	2394	Sisma Y SLV	0	19.2	0	0	2.5E2	0.453
8405	2394	Sisma X SLD	18.9	0	0	0	2.5E2	0.453	8406	2394	Sisma Y SLD	0	18.9	0	0	2.5E2	0.453
8407	2395	Sisma X SLV	22.6	0	0	0	292.85	0.453	8408	2395	Sisma Y SLV	0	22.6	0	0	292.85	0.453
8409	2395	Sisma X SLD	22.3	0	0	0	292.85	0.453	8410	2395	Sisma Y SLD	0	22.3	0	0	292.85	0.453
8411	2396	Sisma X SLV	21.7	0	0	0	2.8E2	0.454	8412	2396	Sisma Y SLV	0	21.7	0	0	2.8E2	0.454
8413	2396	Sisma X SLD	21.4	0	0	0	2.8E2	0.454	8414	2396	Sisma Y SLD	0	21.4	0	0	2.8E2	0.454
8415	2397	Sisma X SLV	22.9	0	0	0	2.9E2	0.454	8416	2397	Sisma Y SLV	0	22.9	0	0	2.9E2	0.454
8417	2397	Sisma X SLD	22.5	0	0	0	2.9E2	0.454	8418	2397	Sisma Y SLD	0	22.5	0	0	2.9E2	0.454
8419	2398	Sisma X SLV	21.8	0	0	0	2.8E2	0.454	8420	2398	Sisma Y SLV	0	21.8	0	0	2.8E2	0.454
8421	2398	Sisma X SLD	21.4	0	0	0	2.8E2	0.454	8422	2398	Sisma Y SLD	0	21.4	0	0	2.8E2	0.454
8423	2399	Sisma X SLV	22.9	0	0	0	3.0E2	0.454	8424	2399	Sisma Y SLV	0	22.9	0	0	3.0E2	0.454
8425	2399	Sisma X SLD	22.6	0	0	0	3.0E2	0.454	8426	2399	Sisma Y SLD	0	22.6	0	0	3.0E2	0.454
8427	2400	Sisma X SLV	21.2	0	0	0	2.7E2	0.454	8428	2400	Sisma Y SLV	0	21.2	0	0	2.7E2	0.454
8429	2400	Sisma X SLD	20.9	0	0	0	2.7E2	0.454	8430	2400	Sisma Y SLD	0	20.9	0	0	2.7E2	0.454
8431	2401	Sisma X SLV	21.7	0	0	0	2.8E2	0.454	8432	2401	Sisma Y SLV	0	21.7	0	0	2.8E2	0.454
8433	2401	Sisma X SLD	21.4	0	0	0	2.8E2	0.454	8434	2401	Sisma Y SLD	0	21.4	0	0	2.8E2	0.454
8435	2402	Sisma X SLV	22.1	0	0	0	2.8E2	0.455	8436	2402	Sisma Y SLV	0	22.1	0	0	2.8E2	0.455
8437	2402	Sisma X SLD	21.7	0	0	0	2.8E2	0.455	8438	2402	Sisma Y SLD	0	21.7	0	0	2.8E2	0.455
8439	2403	Sisma X SLV	21.8	0	0	0	2.8E2	0.455	8440	2403	Sisma Y SLV	0	21.8	0	0	2.8E2	0.455
8441	2403	Sisma X SLD	21.5	0	0	0	2.8E2	0.455	8442	2403	Sisma Y SLD	0	21.5	0	0	2.8E2	0.455
8443	2404	Sisma X SLV	23	0	0	0	3.0E2	0.455	8444	2404	Sisma Y SLV	0	23	0	0	3.0E2	0.455
8445	2404	Sisma X SLD	22.6	0	0	0	3.0E2	0.455	8446	2404	Sisma Y SLD	0	22.6	0	0	3.0E2	0.455
8447	2405	Sisma X SLV	21.4	0	0	0	2.8E2	0.455	8448	2405	Sisma Y SLV	0	21.4	0	0	2.8E2	0.455
8449	2405	Sisma X SLD	21	0	0	0	2.8E2	0.455	8450	2405	Sisma Y SLD	0	21	0	0	2.8E2	0.455
8451	2406	Sisma X SLV	21.6	0	0	0	277.94	0.455	8452	2406	Sisma Y SLV	0	21.6	0	0	277.94	0.455
8453	2406	Sisma X SLD	21.2	0	0	0	277.94	0.455	8454	2406	Sisma Y SLD	0	21.2	0	0	277.94	0.455
8455	2407	Sisma X SLV	21.8	0	0	0	2.8E2	0.455	8456	2407	Sisma Y SLV	0	21.8	0	0	2.8E2	0.455
8457	2407	Sisma X SLD	21.5	0	0	0	2.8E2	0.455	8458	2407	Sisma Y SLD	0	21.5	0	0	2.8E2	0.455
8459	2408	Sisma X SLV	21.4	0	0	0	2.8E2	0.455	8460	2408	Sisma Y SLV	0	21.4	0	0	2.8E2	0.455
8461	2408	Sisma X SLD	21.1	0	0	0	2.8E2	0.455	8462	2408	Sisma Y SLD	0	21.1	0	0	2.8E2	0.455
8463	2409	Sisma X SLV	23	0	0	0	3.0E2	0.455	8464	2409	Sisma Y SLV	0	23	0	0	3.0E2	0.455
8465	2409	Sisma X SLD	22.6	0	0	0	3.0E2	0.455	8466	2409	Sisma Y SLD	0	22.6	0	0	3.0E2	0.455
8467	2410	Sisma X SLV	21.5	0	0	0	2.8E2	0.455	8468	2410	Sisma Y SLV	0	21.5	0	0	2.8E2	0.455
8469	2410	Sisma X SLD	21.1	0	0	0	2.8E2	0.455	8470	2410	Sisma Y SLD	0	21.1	0	0	2.8E2	0.455
8471	2411	Sisma X SLV	21.9	0	0	0	2.8E2	0.455	8472	2411	Sisma Y SLV	0	21.9	0	0	2.8E2	0.455
8473	2411	Sisma X SLD	21.5	0	0	0	2.8E2	0.455	8474	2411	Sisma Y SLD	0	21.5	0	0	2.8E2	0.455
8475	2412	Sisma X SLV	21.4	0	0	0	2.8E2	0.455	8476	2412	Sisma Y SLV	0	21.4	0	0	2.8E2	0.455
8477	2412	Sisma X SLD	21.1	0	0	0	2.8E2	0.455	8478	2412	Sisma Y SLD	0	21.1	0	0	2.8E2	0.455
8479	2413	Sisma X SLV	21.9	0	0	0	2.8E2	0.455	8480	2413	Sisma Y SLV	0	21.9	0	0	2.8E2	0.455
8481	2413	Sisma X SLD	21.5	0	0	0	2.8E2	0.455	8482	2413	Sisma Y SLD	0	21.5	0	0	2.8E2	0.455
8483	2414	Sisma X SLV	21.5	0	0	0	2.8E2	0.455	8484	2414	Sisma Y SLV	0	21.5	0	0	2.8E2	0.455
8485	2414	Sisma X SLD	21.1	0	0	0	2.8E2	0.455	8486	2414	Sisma Y SLD	0	21.1	0	0	2.8E2	0.455
8487	2415	Sisma X SLV	20.7	0	0	0	2.7E2	0.455	8488	2415	Sisma Y SLV	0	20.7	0	0	2.7E2	0.455
8489	2415	Sisma X SLD	20.4	0	0	0	2.7E2	0.455	8490	2415	Sisma Y SLD	0	20.4	0	0	2.7E2	0.455
8491	2416	Sisma X SLV	34.9	0	0	0	4.5E2	0.455	8492	2416	Sisma Y SLV	0	34.9	0	0	4.5E2	0.455
8493	2416	Sisma X SLD	34.4	0	0	0	4.5E2	0.455	8494	2416	Sisma Y SLD	0	34.4	0	0	4.5E2	0.455
8495	2417	Sisma X SLV	33.9	0	0	0	4.4E2	0.455	8496	2417	Sisma Y SLV	0	33.9	0	0	4.4E2	0.455
8497	2417	Sisma X SLD	33.3	0	0	0	4.4E2	0.455	8498	2417	Sisma Y SLD	0	33.3	0	0	4.4E2	0.455
8499	2418	Sisma X SLV	21.9	0	0	0	281.27	0.455	8500	2418	Sisma Y SLV	0	21.9	0	0	281.27	0.455
8501	2418	Sisma X SLD	21.5	0	0	0	281.27	0.455	8502	2418	Sisma Y SLD	0	21.5	0	0	281.27	0.455
8503	2419	Sisma X SLV	20.8	0	0	0	2.7E2	0.455	8504	2419	Sisma Y SLV	0	20.8	0	0	2.7E2	0.455
8505	2419	Sisma X SLD	20.5	0	0	0	2.7E2	0.455	8506	2419	Sisma Y SLD	0	20.5	0	0	2.7E2	0.455
8507	2420	Sisma X SLV	23.5	0	0	0	3.0E2	0.455	8508	2420	Sisma Y SLV	0	23.5	0	0	3.0E2	0.455
8509	2420	Sisma X SLD	23.1	0	0	0	3.0E2	0.455	8510	2420	Sisma Y SLD	0	23.1	0	0	3.0E2	0.455
8511	2421	Sisma X SLV	23.5	0	0	0	3.0E2	0.455	8512	2421	Sisma Y SLV	0	23.5	0	0	3.0E2	0.455

Indice	Nodo	Condizione	Fx	Fy	Fz	Mz	Peso	Gamma	Indice	Nodo	Condizione	Fx	Fy	Fz	Mz	Peso	Gamma
8513	2421	Sisma X SLD	23.1	0	0	0	3.0E2	0.455	8514	2421	Sisma Y SLD	0	23.1	0	0	3.0E2	0.455
8515	2422	Sisma X SLV	23.9	0	0	0	3.1E2	0.455	8516	2422	Sisma Y SLV	0	23.9	0	0	3.1E2	0.455
8517	2422	Sisma X SLD	23.6	0	0	0	3.1E2	0.455	8518	2422	Sisma Y SLD	0	23.6	0	0	3.1E2	0.455
8519	2423	Sisma X SLV	23.9	0	0	0	3.1E2	0.455	8520	2423	Sisma Y SLV	0	23.9	0	0	3.1E2	0.455
8521	2423	Sisma X SLD	23.6	0	0	0	3.1E2	0.455	8522	2423	Sisma Y SLD	0	23.6	0	0	3.1E2	0.455
8523	2424	Sisma X SLV	24.6	0	0	0	3.2E2	0.455	8524	2424	Sisma Y SLV	0	24.6	0	0	3.2E2	0.455
8525	2424	Sisma X SLD	24.2	0	0	0	3.2E2	0.455	8526	2424	Sisma Y SLD	0	24.2	0	0	3.2E2	0.455
8527	2425	Sisma X SLV	24.6	0	0	0	3.2E2	0.455	8528	2425	Sisma Y SLV	0	24.6	0	0	3.2E2	0.455
8529	2425	Sisma X SLD	24.2	0	0	0	3.2E2	0.455	8530	2425	Sisma Y SLD	0	24.2	0	0	3.2E2	0.455
8531	2426	Sisma X SLV	25.2	0	0	0	3.2E2	0.455	8532	2426	Sisma Y SLV	0	25.2	0	0	3.2E2	0.455
8533	2426	Sisma X SLD	24.8	0	0	0	3.2E2	0.455	8534	2426	Sisma Y SLD	0	24.8	0	0	3.2E2	0.455
8535	2427	Sisma X SLV	25.2	0	0	0	3.2E2	0.455	8536	2427	Sisma Y SLV	0	25.2	0	0	3.2E2	0.455
8537	2427	Sisma X SLD	24.8	0	0	0	3.2E2	0.455	8538	2427	Sisma Y SLD	0	24.8	0	0	3.2E2	0.455
8539	2428	Sisma X SLV	25.8	0	0	0	3.3E2	0.455	8540	2428	Sisma Y SLV	0	25.8	0	0	3.3E2	0.455
8541	2428	Sisma X SLD	25.4	0	0	0	3.3E2	0.455	8542	2428	Sisma Y SLD	0	25.4	0	0	3.3E2	0.455
8543	2429	Sisma X SLV	25.8	0	0	0	3.3E2	0.455	8544	2429	Sisma Y SLV	0	25.8	0	0	3.3E2	0.455
8545	2429	Sisma X SLD	25.4	0	0	0	3.3E2	0.455	8546	2429	Sisma Y SLD	0	25.4	0	0	3.3E2	0.455
8547	2430	Sisma X SLV	26.2	0	0	0	3.4E2	0.455	8548	2430	Sisma Y SLV	0	26.2	0	0	3.4E2	0.455
8549	2430	Sisma X SLD	25.8	0	0	0	3.4E2	0.455	8550	2430	Sisma Y SLD	0	25.8	0	0	3.4E2	0.455
8551	2431	Sisma X SLV	26.2	0	0	0	3.4E2	0.455	8552	2431	Sisma Y SLV	0	26.2	0	0	3.4E2	0.455
8553	2431	Sisma X SLD	25.8	0	0	0	3.4E2	0.455	8554	2431	Sisma Y SLD	0	25.8	0	0	3.4E2	0.455
8555	2432	Sisma X SLV	26.5	0	0	0	3.4E2	0.455	8556	2432	Sisma Y SLV	0	26.5	0	0	3.4E2	0.455
8557	2432	Sisma X SLD	26	0	0	0	3.4E2	0.455	8558	2432	Sisma Y SLD	0	26	0	0	3.4E2	0.455
8559	2433	Sisma X SLV	26.5	0	0	0	3.4E2	0.455	8560	2433	Sisma Y SLV	0	26.5	0	0	3.4E2	0.455
8561	2433	Sisma X SLD	26	0	0	0	3.4E2	0.455	8562	2433	Sisma Y SLD	0	26	0	0	3.4E2	0.455
8563	2434	Sisma X SLV	26.6	0	0	0	342.28	0.455	8564	2434	Sisma Y SLV	0	26.6	0	0	342.28	0.455
8565	2434	Sisma X SLD	26.2	0	0	0	342.28	0.455	8566	2434	Sisma Y SLD	0	26.2	0	0	342.28	0.455
8567	2435	Sisma X SLV	26.6	0	0	0	342.28	0.455	8568	2435	Sisma Y SLV	0	26.6	0	0	342.28	0.455
8569	2435	Sisma X SLD	26.2	0	0	0	342.28	0.455	8570	2435	Sisma Y SLD	0	26.2	0	0	342.28	0.455
8571	2436	Sisma X SLV	26.7	0	0	0	3.4E2	0.455	8572	2436	Sisma Y SLV	0	26.7	0	0	3.4E2	0.455
8573	2436	Sisma X SLD	26.2	0	0	0	3.4E2	0.455	8574	2436	Sisma Y SLD	0	26.2	0	0	3.4E2	0.455
8575	2437	Sisma X SLV	26.7	0	0	0	3.4E2	0.455	8576	2437	Sisma Y SLV	0	26.7	0	0	3.4E2	0.455
8577	2437	Sisma X SLD	26.2	0	0	0	3.4E2	0.455	8578	2437	Sisma Y SLD	0	26.2	0	0	3.4E2	0.455
8579	2438	Sisma X SLV	26.7	0	0	0	3.4E2	0.455	8580	2438	Sisma Y SLV	0	26.7	0	0	3.4E2	0.455
8581	2438	Sisma X SLD	26.3	0	0	0	3.4E2	0.455	8582	2438	Sisma Y SLD	0	26.3	0	0	3.4E2	0.455
8583	2439	Sisma X SLV	26.7	0	0	0	3.4E2	0.455	8584	2439	Sisma Y SLV	0	26.7	0	0	3.4E2	0.455
8585	2439	Sisma X SLD	26.3	0	0	0	3.4E2	0.455	8586	2439	Sisma Y SLD	0	26.3	0	0	3.4E2	0.455
8587	2440	Sisma X SLV	26.7	0	0	0	3.4E2	0.455	8588	2440	Sisma Y SLV	0	26.7	0	0	3.4E2	0.455
8589	2440	Sisma X SLD	26.3	0	0	0	3.4E2	0.455	8590	2440	Sisma Y SLD	0	26.3	0	0	3.4E2	0.455
8591	2441	Sisma X SLV	26.7	0	0	0	3.4E2	0.455	8592	2441	Sisma Y SLV	0	26.7	0	0	3.4E2	0.455
8593	2441	Sisma X SLD	26.3	0	0	0	3.4E2	0.455	8594	2441	Sisma Y SLD	0	26.3	0	0	3.4E2	0.455
8595	2442	Sisma X SLV	37.6	0	0	0	4.8E2	0.455	8596	2442	Sisma Y SLV	0	37.6	0	0	4.8E2	0.455
8597	2442	Sisma X SLD	37	0	0	0	4.8E2	0.455	8598	2442	Sisma Y SLD	0	37	0	0	4.8E2	0.455
8599	2443	Sisma X SLV	37.6	0	0	0	4.8E2	0.455	8600	2443	Sisma Y SLV	0	37.6	0	0	4.8E2	0.455
8601	2443	Sisma X SLD	37	0	0	0	4.8E2	0.455	8602	2443	Sisma Y SLD	0	37	0	0	4.8E2	0.455
8603	2444	Sisma X SLV	25.3	0	0	0	3.3E2	0.455	8604	2444	Sisma Y SLV	0	25.3	0	0	3.3E2	0.455
8605	2444	Sisma X SLD	24.9	0	0	0	3.3E2	0.455	8606	2444	Sisma Y SLD	0	24.9	0	0	3.3E2	0.455
8607	2445	Sisma X SLV	25.3	0	0	0	3.3E2	0.455	8608	2445	Sisma Y SLV	0	25.3	0	0	3.3E2	0.455
8609	2445	Sisma X SLD	24.9	0	0	0	3.3E2	0.455	8610	2445	Sisma Y SLD	0	24.9	0	0	3.3E2	0.455
8611	2446	Sisma X SLV	25.3	0	0	0	3.3E2	0.455	8612	2446	Sisma Y SLV	0	25.3	0	0	3.3E2	0.455
8613	2446	Sisma X SLD	24.9	0	0	0	3.3E2	0.455	8614	2446	Sisma Y SLD	0	24.9	0	0	3.3E2	0.455
8615	2447	Sisma X SLV	25.3	0	0	0	3.3E2	0.455	8616	2447	Sisma Y SLV	0	25.3	0	0	3.3E2	0.455
8617	2447	Sisma X SLD	24.9	0	0	0	3.3E2	0.455	8618	2447	Sisma Y SLD	0	24.9	0	0	3.3E2	0.455
8619	2448	Sisma X SLV	25.2	0	0	0	3.2E2	0.455	8620	2448	Sisma Y SLV	0	25.2	0	0	3.2E2	0.455
8621	2448	Sisma X SLD	24.8	0	0	0	3.2E2	0.455	8622	2448	Sisma Y SLD	0	24.8	0	0	3.2E2	0.455
8623	2449	Sisma X SLV	25.2	0	0	0	3.2E2	0.455	8624	2449	Sisma Y SLV	0	25.2	0	0	3.2E2	0.455
8625	2449	Sisma X SLD	24.8	0	0	0	3.2E2	0.455	8626	2449	Sisma Y SLD	0	24.8	0	0	3.2E2	0.455
8627	2450	Sisma X SLV	25.1	0	0	0	3.2E2	0.455	8628	2450	Sisma Y SLV	0	25.1	0	0	3.2E2	0.455
8629	2450	Sisma X SLD	24.7	0	0	0	3.2E2	0.455	8630	2450	Sisma Y SLD	0	24.7	0	0	3.2E2	0.455
8631	2451	Sisma X SLV	25	0	0	0	3.2E2	0.455	8632	2451	Sisma Y SLV	0	25	0	0	3.2E2	0.455
8633	2451	Sisma X SLD	24.6	0	0	0	3.2E2	0.455	8634	2451	Sisma Y SLD	0	24.6	0	0	3.2E2	0.455
8635	2452	Sisma X SLV	25.1	0	0	0	3.2E2	0.455	8636	2452	Sisma Y SLV	0	25.1	0	0	3.2E2	0.455
8637	2452	Sisma X SLD	24.7	0	0	0	3.2E2	0.455	8638	2452	Sisma Y SLD	0	24.7	0	0	3.2E2	0.455
8639	2453	Sisma X SLV	25.1	0	0	0	3.2E2	0.455	8640	2453	Sisma Y SLV	0	25.1	0	0	3.2E2	0.455
8641	2453	Sisma X SLD	24.7	0	0	0	3.2E2	0.455	8642	2453	Sisma Y SLD	0	24.7	0	0	3.2E2	0.455
8643	2454	Sisma X SLV	25.2	0	0	0	3.2E2	0.455	8644	2454	Sisma Y SLV	0	25.2	0	0	3.2E2	0.455
8645	2454	Sisma X SLD	24.8	0	0	0	3.2E2	0.455	8646	2454	Sisma Y SLD	0	24.8	0	0	3.2E2	0.455
8647	2455	Sisma X SLV	27.1	0	0	0	3.5E2	0.455	8648	2455	Sisma Y SLV	0	27.1	0	0	3.5E2	0.455
8649	2455	Sisma X SLD	26.6	0	0	0	3.5E2	0.455	8650	2455	Sisma Y SLD	0	26.6	0	0	3.5E2	0.455
8651	2456	Sisma X SLV	32.6	0	0	0	4.2E2	0.455	8652	2456	Sisma Y SLV	0	32.6	0	0	4.2E2	0.455
8653	2456	Sisma X SLD	32.1	0	0	0	4.2E2	0.455	8654	2456	Sisma Y SLD	0	32.1	0	0	4.2E2	0.455
8655	2457	Sisma X SLV	32.5	0	0	0	4.2E2	0.455	8656	2457	Sisma Y SLV	0	32.5	0	0	4.2E2	0.455
8657	2457	Sisma X SLD	31.9	0	0	0	4.2E2	0.455	8658	2457	Sisma Y SLD	0	31.9	0	0	4.2E2	0.455
8659	2458	Sisma X SLV	27.8	0	0	0	3.6E2	0.455	8660	2458	Sisma Y SLV	0	27.8	0	0	3.6E2	0.455
8661	2458	Sisma X SLD	27.4	0	0	0	3.6E2	0.455	8662	2458	Sisma Y SLD	0	27.4	0	0	3.6E2	0.455
8663	2459	Sisma X SLV	27.8	0	0	0	3.6E2	0.455	8664	2459	Sisma Y SLV	0	27.8	0	0	3.6E2	0.455
8665	2459	Sisma X SLD	27.4	0	0	0	3.6E2	0.455	8666	2459	Sisma Y SLD	0	27.4	0	0	3.6E2	0.455
8667	2460	Sisma X SLV	27.7	0	0	0	3.6E2	0.455	8668	2460	Sisma Y SLV	0	27.7	0	0	3.6E2	0.455
8669	2460	Sisma X SLD	27.3	0	0	0	3.6E2	0.455	8670	2460	Sisma Y SLD	0	27.3	0	0	3.6E2	0.455
8671	2461	Sisma X SLV	27.6	0	0	0	3.6E2	0.455	8672	2461	Sisma Y SLV	0	27.6	0	0	3.6E2	0.455
8673	2461	Sisma X SLD	27.2	0	0	0	3.6E2	0.455	8674	2461	Sisma Y SLD	0	27.2	0	0	3.6E2	0.455
8675	2462	Sisma X SLV	27.3	0	0	0	3.5E2	0.455	8676	2462	Sisma Y SLV	0	27.3	0	0	3.5E2	0.455
8677	2462	Sisma X SLD	26.9	0	0	0	3.5E2	0.455	8678	2462	Sisma Y SLD	0	26.9	0	0	3.5E2	0.455
8679	2463	Sisma X SLV	27	0	0	0	3.5E2	0.455	8680	2463	Sisma Y SLV	0	27	0	0	3.5E2	0.455
8681	2463	Sisma X SLD	26.5	0	0	0	3.5E2	0.455	8682	2463	Sisma Y SLD	0	26.5	0	0	3.5E2	0.455
8683	2464	Sisma X SLV	26.6	0	0	0	342.59	0.455	8684	2464	Sisma Y SLV	0	26.6	0	0	342.59	0.455
8685	2464	Sisma X SLD	26.2	0	0	0	342.59	0.455	8686	2464	Sisma Y SLD	0	26.2	0	0	342.59	0.455
8687	2465	Sisma X SLV	26.3	0	0	0	3.4E2	0.455	8688	2465	Sisma Y SLV	0	26.3	0	0	3.4E2	0.455
8689	2465	Sisma X SLD	25.9	0	0	0	3.4E2	0.455	8690	2465	Sisma Y SLD	0	25.9	0	0	3.4E2	0.455
8691	2466	Sisma X SLV	26.2	0	0	0	3.4E2	0.455	8692	2466	Sisma Y SLV	0	26.2	0	0	3.4E2	0.455
8693	2466	Sisma X SLD	25.8	0	0	0	3.4E2	0.455	8694	2466	Sisma Y SLD	0	25.8	0	0	3.4E2	0.455
8695	2467	Sisma X SLV	26.1	0	0	0	336.12	0.455	8696	2467	Sisma Y SLV	0	26.1	0	0	336.12	0.455
8697	2467	Sisma X SLD	25.7	0	0	0	336.12	0.455	8698	2467	Sisma Y SLD	0	25.7	0	0	336.12	0.455
8699	2468	Sisma X SLV	23	0	0	0	3.0E2	0.455	8700	2468	Sisma Y SLV	0	23	0	0	3.0E2	0.455
8701	2468	Sisma X SLD	22.7	0	0	0	3.0E2	0.455	8702	2468	Sisma Y SLD	0	22.7	0	0	3.0E2	0.455
8703	2469	Sisma X SLV	21.5	0	0	0	2.8E2	0.455	8704	2469	Sisma Y SLV	0	21.5	0	0	2.8E2	0.455
8705	2469	Sisma X SLD	21.1	0	0	0	2.8E2	0.455	8706	2469	Sisma Y SLD	0	21.1	0	0	2.8E2	0.455
8707	2470	Sisma X SLV	35.7	0	0	0	4.6E2	0.455	8708	2470	Sisma Y SLV	0	35.7	0	0	4.6E2	0.455
8709	2470	Sisma X SLD	35.2	0	0	0	4.6E2	0.455	8710	2470	Sisma Y SLD	0	35.2	0	0	4.6E2	0.455
8711	2471	Sisma X SLV	36.2	0	0	0	465.62	0.455	8712	2471	Sisma Y SLV	0	36.2	0	0	465.62	0.455
8713	2471	Sisma X SLD	35.6	0	0	0	465.62	0.455	8714	2471	Sisma Y SLD	0	35.6	0	0	465.62	0.455

Indice	Nodo	Condizione	Fx	Fy	Fz	Mz	Peso	Gamma	Indice	Nodo	Condizione	Fx	Fy	Fz	Mz	Peso	Gamma
8715	2472	Sisma X SLV	21.7	0	0	0	2.8E2	0.455	8716	2472	Sisma Y SLV	0	21.7	0	0	2.8E2	0.455
8717	2472	Sisma X SLD	21.4	0	0	0	2.8E2	0.455	8718	2472	Sisma Y SLD	0	21.4	0	0	2.8E2	0.455
8719	2473	Sisma X SLV	3.7	0	0	0	47.22	0.456	8720	2473	Sisma Y SLV	0	3.7	0	0	47.22	0.456
8721	2473	Sisma X SLD	3.6	0	0	0	47.22	0.456	8722	2473	Sisma Y SLD	0	3.6	0	0	47.22	0.456
8723	2474	Sisma X SLV	8.2	0	0	0	1.1E2	0.456	8724	2474	Sisma Y SLV	0	8.2	0	0	1.1E2	0.456
8725	2474	Sisma X SLD	8.1	0	0	0	1.1E2	0.456	8726	2474	Sisma Y SLD	0	8.1	0	0	1.1E2	0.456
8727	2475	Sisma X SLV	7.6	0	0	0	97.398	0.457	8728	2475	Sisma Y SLV	0	7.6	0	0	97.398	0.457
8729	2475	Sisma X SLD	7.5	0	0	0	97.398	0.457	8730	2475	Sisma Y SLD	0	7.5	0	0	97.398	0.457
8731	2476	Sisma X SLV	11.5	0	0	0	1.5E2	0.457	8732	2476	Sisma Y SLV	0	11.5	0	0	1.5E2	0.457
8733	2476	Sisma X SLD	11.3	0	0	0	1.5E2	0.457	8734	2476	Sisma Y SLD	0	11.3	0	0	1.5E2	0.457
8735	2477	Sisma X SLV	11.5	0	0	0	1.5E2	0.457	8736	2477	Sisma Y SLV	0	11.5	0	0	1.5E2	0.457
8737	2477	Sisma X SLD	11.3	0	0	0	1.5E2	0.457	8738	2477	Sisma Y SLD	0	11.3	0	0	1.5E2	0.457
8739	2478	Sisma X SLV	21.8	0	0	0	2.8E2	0.457	8740	2478	Sisma Y SLV	0	21.8	0	0	2.8E2	0.457
8741	2478	Sisma X SLD	21.4	0	0	0	2.8E2	0.457	8742	2478	Sisma Y SLD	0	21.4	0	0	2.8E2	0.457
8743	2479	Sisma X SLV	8.6	0	0	0	1.1E2	0.458	8744	2479	Sisma Y SLV	0	8.6	0	0	1.1E2	0.458
8745	2479	Sisma X SLD	8.4	0	0	0	1.1E2	0.458	8746	2479	Sisma Y SLD	0	8.4	0	0	1.1E2	0.458
8747	2480	Sisma X SLV	12.5	0	0	0	1.6E2	0.458	8748	2480	Sisma Y SLV	0	12.5	0	0	1.6E2	0.458
8749	2480	Sisma X SLD	12.3	0	0	0	1.6E2	0.458	8750	2480	Sisma Y SLD	0	12.3	0	0	1.6E2	0.458
8751	2481	Sisma X SLV	11.8	0	0	0	1.5E2	0.458	8752	2481	Sisma Y SLV	0	11.8	0	0	1.5E2	0.458
8753	2481	Sisma X SLD	11.6	0	0	0	1.5E2	0.458	8754	2481	Sisma Y SLD	0	11.6	0	0	1.5E2	0.458
8755	2482	Sisma X SLV	25	0	0	0	3.2E2	0.458	8756	2482	Sisma Y SLV	0	25	0	0	3.2E2	0.458
8757	2482	Sisma X SLD	24.6	0	0	0	3.2E2	0.458	8758	2482	Sisma Y SLD	0	24.6	0	0	3.2E2	0.458
8759	2483	Sisma X SLV	23.7	0	0	0	3.0E2	0.458	8760	2483	Sisma Y SLV	0	23.7	0	0	3.0E2	0.458
8761	2483	Sisma X SLD	23.3	0	0	0	3.0E2	0.458	8762	2483	Sisma Y SLD	0	23.3	0	0	3.0E2	0.458
8763	2484	Sisma X SLV	11.5	0	0	0	1.5E2	0.459	8764	2484	Sisma Y SLV	0	11.5	0	0	1.5E2	0.459
8765	2484	Sisma X SLD	11.3	0	0	0	1.5E2	0.459	8766	2484	Sisma Y SLD	0	11.3	0	0	1.5E2	0.459
8767	2485	Sisma X SLV	11.5	0	0	0	1.5E2	0.459	8768	2485	Sisma Y SLV	0	11.5	0	0	1.5E2	0.459
8769	2485	Sisma X SLD	11.3	0	0	0	1.5E2	0.459	8770	2485	Sisma Y SLD	0	11.3	0	0	1.5E2	0.459
8771	2486	Sisma X SLV	8.9	0	0	0	1.1E2	0.459	8772	2486	Sisma Y SLV	0	8.9	0	0	1.1E2	0.459
8773	2486	Sisma X SLD	8.7	0	0	0	1.1E2	0.459	8774	2486	Sisma Y SLD	0	8.7	0	0	1.1E2	0.459
8775	2487	Sisma X SLV	27.1	0	0	0	3.5E2	0.459	8776	2487	Sisma Y SLV	0	27.1	0	0	3.5E2	0.459
8777	2487	Sisma X SLD	26.6	0	0	0	3.5E2	0.459	8778	2487	Sisma Y SLD	0	26.6	0	0	3.5E2	0.459
8779	2488	Sisma X SLV	21.8	0	0	0	2.8E2	0.459	8780	2488	Sisma Y SLV	0	21.8	0	0	2.8E2	0.459
8781	2488	Sisma X SLD	21.4	0	0	0	2.8E2	0.459	8782	2488	Sisma Y SLD	0	21.4	0	0	2.8E2	0.459
8783	2489	Sisma X SLV	8.8	0	0	0	111.73	0.46	8784	2489	Sisma Y SLV	0	8.8	0	0	111.73	0.46
8785	2489	Sisma X SLD	8.6	0	0	0	111.73	0.46	8786	2489	Sisma Y SLD	0	8.6	0	0	111.73	0.46
8787	2490	Sisma X SLV	12.5	0	0	0	1.6E2	0.46	8788	2490	Sisma Y SLV	0	12.5	0	0	1.6E2	0.46
8789	2490	Sisma X SLD	12.3	0	0	0	1.6E2	0.46	8790	2490	Sisma Y SLD	0	12.3	0	0	1.6E2	0.46
8791	2491	Sisma X SLV	8.2	0	0	0	1.0E2	0.46	8792	2491	Sisma Y SLV	0	8.2	0	0	1.0E2	0.46
8793	2491	Sisma X SLD	8.1	0	0	0	1.0E2	0.46	8794	2491	Sisma Y SLD	0	8.1	0	0	1.0E2	0.46
8795	2492	Sisma X SLV	24	0	0	0	3.1E2	0.461	8796	2492	Sisma Y SLV	0	24	0	0	3.1E2	0.461
8797	2492	Sisma X SLD	23.6	0	0	0	3.1E2	0.461	8798	2492	Sisma Y SLD	0	23.6	0	0	3.1E2	0.461
8799	2493	Sisma X SLV	12.9	0	0	0	164.08	0.461	8800	2493	Sisma Y SLV	0	12.9	0	0	164.08	0.461
8801	2493	Sisma X SLD	12.7	0	0	0	164.08	0.461	8802	2493	Sisma Y SLD	0	12.7	0	0	164.08	0.461
8803	2494	Sisma X SLV	11.5	0	0	0	1.5E2	0.461	8804	2494	Sisma Y SLV	0	11.5	0	0	1.5E2	0.461
8805	2494	Sisma X SLD	11.3	0	0	0	1.5E2	0.461	8806	2494	Sisma Y SLD	0	11.3	0	0	1.5E2	0.461
8807	2495	Sisma X SLV	11.5	0	0	0	1.5E2	0.461	8808	2495	Sisma Y SLV	0	11.5	0	0	1.5E2	0.461
8809	2495	Sisma X SLD	11.3	0	0	0	1.5E2	0.461	8810	2495	Sisma Y SLD	0	11.3	0	0	1.5E2	0.461
8811	2496	Sisma X SLV	7.1	0	0	0	89.965	0.461	8812	2496	Sisma Y SLV	0	7.1	0	0	89.965	0.461
8813	2496	Sisma X SLD	7	0	0	0	89.965	0.461	8814	2496	Sisma Y SLD	0	7	0	0	89.965	0.461
8815	2497	Sisma X SLV	11.8	0	0	0	149.81	0.461	8816	2497	Sisma Y SLV	0	11.8	0	0	149.81	0.461
8817	2497	Sisma X SLD	11.6	0	0	0	149.81	0.461	8818	2497	Sisma Y SLD	0	11.6	0	0	149.81	0.461
8819	2498	Sisma X SLV	24.9	0	0	0	3.2E2	0.461	8820	2498	Sisma Y SLV	0	24.9	0	0	3.2E2	0.461
8821	2498	Sisma X SLD	24.5	0	0	0	3.2E2	0.461	8822	2498	Sisma Y SLD	0	24.5	0	0	3.2E2	0.461
8823	2499	Sisma X SLV	21.7	0	0	0	2.8E2	0.462	8824	2499	Sisma Y SLV	0	21.7	0	0	2.8E2	0.462
8825	2499	Sisma X SLD	21.4	0	0	0	2.8E2	0.462	8826	2499	Sisma Y SLD	0	21.4	0	0	2.8E2	0.462
8827	2500	Sisma X SLV	23.4	0	0	0	297.07	0.462	8828	2500	Sisma Y SLV	0	23.4	0	0	297.07	0.462
8829	2500	Sisma X SLD	23	0	0	0	297.07	0.462	8830	2500	Sisma Y SLD	0	23	0	0	297.07	0.462
8831	2501	Sisma X SLV	22.3	0	0	0	2.8E2	0.462	8832	2501	Sisma Y SLV	0	22.3	0	0	2.8E2	0.462
8833	2501	Sisma X SLD	21.9	0	0	0	2.8E2	0.462	8834	2501	Sisma Y SLD	0	21.9	0	0	2.8E2	0.462
8835	2502	Sisma X SLV	4.9	0	0	0	62.483	0.463	8836	2502	Sisma Y SLV	0	4.9	0	0	62.483	0.463
8837	2502	Sisma X SLD	4.9	0	0	0	62.483	0.463	8838	2502	Sisma Y SLD	0	4.9	0	0	62.483	0.463
8839	2503	Sisma X SLV	12.4	0	0	0	1.6E2	0.463	8840	2503	Sisma Y SLV	0	12.4	0	0	1.6E2	0.463
8841	2503	Sisma X SLD	12.2	0	0	0	1.6E2	0.463	8842	2503	Sisma Y SLD	0	12.2	0	0	1.6E2	0.463
8843	2504	Sisma X SLV	11.5	0	0	0	1.4E2	0.463	8844	2504	Sisma Y SLV	0	11.5	0	0	1.4E2	0.463
8845	2504	Sisma X SLD	11.3	0	0	0	1.4E2	0.463	8846	2504	Sisma Y SLD	0	11.3	0	0	1.4E2	0.463
8847	2505	Sisma X SLV	11.5	0	0	0	1.4E2	0.463	8848	2505	Sisma Y SLV	0	11.5	0	0	1.4E2	0.463
8849	2505	Sisma X SLD	11.3	0	0	0	1.4E2	0.463	8850	2505	Sisma Y SLD	0	11.3	0	0	1.4E2	0.463
8851	2506	Sisma X SLV	27.1	0	0	0	3.4E2	0.463	8852	2506	Sisma Y SLV	0	27.1	0	0	3.4E2	0.463
8853	2506	Sisma X SLD	26.7	0	0	0	3.4E2	0.463	8854	2506	Sisma Y SLD	0	26.7	0	0	3.4E2	0.463
8855	2507	Sisma X SLV	10.5	0	0	0	1.3E2	0.464	8856	2507	Sisma Y SLV	0	10.5	0	0	1.3E2	0.464
8857	2507	Sisma X SLD	10.4	0	0	0	1.3E2	0.464	8858	2507	Sisma Y SLD	0	10.4	0	0	1.3E2	0.464
8859	2508	Sisma X SLV	10.5	0	0	0	1.3E2	0.464	8860	2508	Sisma Y SLV	0	10.5	0	0	1.3E2	0.464
8861	2508	Sisma X SLD	10.4	0	0	0	1.3E2	0.464	8862	2508	Sisma Y SLD	0	10.4	0	0	1.3E2	0.464
8863	2509	Sisma X SLV	21.7	0	0	0	273.85	0.464	8864	2509	Sisma Y SLV	0	21.7	0	0	273.85	0.464
8865	2509	Sisma X SLD	21.3	0	0	0	273.85	0.464	8866	2509	Sisma Y SLD	0	21.3	0	0	273.85	0.464
8867	2510	Sisma X SLV	24.8	0	0	0	312.13	0.465	8868	2510	Sisma Y SLV	0	24.8	0	0	312.13	0.465
8869	2510	Sisma X SLD	24.4	0	0	0	312.13	0.465	8870	2510	Sisma Y SLD	0	24.4	0	0	312.13	0.465
8871	2511	Sisma X SLV	11.8	0	0	0	1.5E2	0.465	8872	2511	Sisma Y SLV	0	11.8	0	0	1.5E2	0.465
8873	2511	Sisma X SLD	11.6	0	0	0	1.5E2	0.465	8874	2511	Sisma Y SLD	0	11.6	0	0	1.5E2	0.465
8875	2512	Sisma X SLV	23	0	0	0	2.9E2	0.465	8876	2512	Sisma Y SLV	0	23	0	0	2.9E2	0.465
8877	2512	Sisma X SLD	22.6	0	0	0	2.9E2	0.465	8878	2512	Sisma Y SLD	0	22.6	0	0	2.9E2	0.465
8879	2513	Sisma X SLV	9.4	0	0	0	1.2E2	0.466	8880	2513	Sisma Y SLV	0	9.4	0	0	1.2E2	0.466
8881	2513	Sisma X SLD	9.3	0	0	0	1.2E2	0.466	8882	2513	Sisma Y SLD	0	9.3	0	0	1.2E2	0.466
8883	2514	Sisma X SLV	11.4	0	0	0	1.4E2	0.466	8884	2514	Sisma Y SLV	0	11.4	0	0	1.4E2	0.466
8885	2514	Sisma X SLD	11.2	0	0	0	1.4E2	0.466	8886	2514	Sisma Y SLD	0	11.2	0	0	1.4E2	0.466
8887	2515	Sisma X SLV	11.4	0	0	0	1.4E2	0.466	8888	2515	Sisma Y SLV	0	11.4	0	0	1.4E2	0.466
8889	2515	Sisma X SLD	11.2	0	0	0	1.4E2	0.466	8890	2515	Sisma Y SLD	0	11.2	0	0	1.4E2	0.466
8891	2516	Sisma X SLV	12.4	0	0	0	1.6E2	0.466	8892	2516	Sisma Y SLV	0	12.4	0	0	1.6E2	0.466
8893	2516	Sisma X SLD	12.2	0	0	0	1.6E2	0.466	8894	2516	Sisma Y SLD	0	12.2	0	0	1.6E2	0.466
8895	2517	Sisma X SLV	12.8	0	0	0	1.6E2	0.467	8896	2517	Sisma Y SLV	0	12.8	0	0	1.6E2	0.467
8897	2517	Sisma X SLD	12.6	0	0	0	1.6E2	0.467	8898	2517	Sisma Y SLD	0	12.6	0	0	1.6E2	0.467
8899	2518	Sisma X SLV	23.8	0	0	0	3.0E2	0.467	8900	2518	Sisma Y SLV	0	23.8	0	0	3.0E2	0.467
8901	2518	Sisma X SLD	23.4	0	0	0	3.0E2	0.467	8902	2518	Sisma Y SLD	0	23.4	0	0	3.0E2	0.467
8903	2519	Sisma X SLV	21.6	0	0	0	2.7E2	0.467	8904	2519	Sisma Y SLV	0	21.6	0	0	2.7E2	0.467
8905	2519	Sisma X SLD	21.3	0	0	0	2.7E2	0.467	8906	2519	Sisma Y SLD	0	21.3	0	0	2.7E2	0.467
8907	2520	Sisma X SLV	27.2	0	0	0	3.4E2	0.468	8908	2520	Sisma Y SLV	0	27.2	0	0	3.4E2	0.468
8909	2520	Sisma X SLD	26.7	0	0	0	3.4E2	0.468	8910	2520	Sisma Y SLD	0	26.7	0	0	3.4E2	0.468
8911	2521	Sisma X SLV	24.6	0	0	0	3.1E2	0.47	8912	2521	Sisma Y SLV	0	24.6	0	0	3.1E2	0.47
8913	2521	Sisma X SLD	24.2	0	0	0	3.1E2	0.47	8914	2521	Sisma Y SLD	0	24.2	0	0	3.1E2	0.47
8915	2522	Sisma X SLV	11.7	0	0	0	1.5E2	0.47	8916	2522	Sisma Y SLV	0	11.7	0	0	1.5E2	0.47
8917	2522	Sisma X SLD	11.5	0	0	0	1.5E2	0.47	8918	2522	Sisma Y SLD	0	11.5	0	0	1.5E2	0.47
8919	2523	Sisma X SLV	22.3	0	0	0	2.8E2	0.47	8920	2523	Sisma Y SLV	0	22.3	0	0	2.8E2	0.47
8921	2523	Sisma X SLD	21.9	0	0	0	2.8E2	0.47	8922	2523	Sisma Y SLD	0	21.9	0	0	2.8E2	0.47

muratura

Indice	Nodo	Condizione	Fx	Fy	Fz	Mz	Peso	Gamma	Indice	Nodo	Condizione	Fx	Fy	Fz	Mz	Peso	Gamma
8923	2524	Sisma X SLV	11.3	0	0	0	1.4E2	0.47	8924	2524	Sisma Y SLV	0	11.3	0	0	1.4E2	0.47
8925	2524	Sisma X SLD	11.1	0	0	0	1.4E2	0.47	8926	2524	Sisma Y SLD	0	11.1	0	0	1.4E2	0.47
8927	2525	Sisma X SLV	11.3	0	0	0	1.4E2	0.47	8928	2525	Sisma Y SLV	0	11.3	0	0	1.4E2	0.47
8929	2525	Sisma X SLD	11.1	0	0	0	1.4E2	0.47	8930	2525	Sisma Y SLD	0	11.1	0	0	1.4E2	0.47
8931	2526	Sisma X SLV	12.2	0	0	0	1.5E2	0.471	8932	2526	Sisma Y SLV	0	12.2	0	0	1.5E2	0.471
8933	2526	Sisma X SLD	12	0	0	0	1.5E2	0.471	8934	2526	Sisma Y SLD	0	12	0	0	1.5E2	0.471
8935	2527	Sisma X SLV	21.9	0	0	0	2.7E2	0.471	8936	2527	Sisma Y SLV	0	21.9	0	0	2.7E2	0.471
8937	2527	Sisma X SLD	21.5	0	0	0	2.7E2	0.471	8938	2527	Sisma Y SLD	0	21.5	0	0	2.7E2	0.471
8939	2528	Sisma X SLV	21.5	0	0	0	2.7E2	0.471	8940	2528	Sisma Y SLV	0	21.5	0	0	2.7E2	0.471
8941	2528	Sisma X SLD	21.1	0	0	0	2.7E2	0.471	8942	2528	Sisma Y SLD	0	21.1	0	0	2.7E2	0.471
8943	2529	Sisma X SLV	24.5	0	0	0	3.0E2	0.472	8944	2529	Sisma Y SLV	0	24.5	0	0	3.0E2	0.472
8945	2529	Sisma X SLD	24.1	0	0	0	3.0E2	0.472	8946	2529	Sisma Y SLD	0	24.1	0	0	3.0E2	0.472
8947	2530	Sisma X SLV	27.4	0	0	0	3.4E2	0.472	8948	2530	Sisma Y SLV	0	27.4	0	0	3.4E2	0.472
8949	2530	Sisma X SLD	27	0	0	0	3.4E2	0.472	8950	2530	Sisma Y SLD	0	27	0	0	3.4E2	0.472
8951	2531	Sisma X SLV	27.1	0	0	0	3.4E2	0.472	8952	2531	Sisma Y SLV	0	27.1	0	0	3.4E2	0.472
8953	2531	Sisma X SLD	26.6	0	0	0	3.4E2	0.472	8954	2531	Sisma Y SLD	0	26.6	0	0	3.4E2	0.472
8955	2532	Sisma X SLV	20.4	0	0	0	253.12	0.472	8956	2532	Sisma Y SLV	0	20.4	0	0	253.12	0.472
8957	2532	Sisma X SLD	20	0	0	0	253.12	0.472	8958	2532	Sisma Y SLD	0	20	0	0	253.12	0.472
8959	2533	Sisma X SLV	6.1	0	0	0	75.656	0.472	8960	2533	Sisma Y SLV	0	6.1	0	0	75.656	0.472
8961	2533	Sisma X SLD	6	0	0	0	75.656	0.472	8962	2533	Sisma Y SLD	0	6	0	0	75.656	0.472
8963	2534	Sisma X SLV	6.4	0	0	0	79.097	0.472	8964	2534	Sisma Y SLV	0	6.4	0	0	79.097	0.472
8965	2534	Sisma X SLD	6.3	0	0	0	79.097	0.472	8966	2534	Sisma Y SLD	0	6.3	0	0	79.097	0.472
8967	2535	Sisma X SLV	4.9	0	0	0	60.916	0.472	8968	2535	Sisma Y SLV	0	4.9	0	0	60.916	0.472
8969	2535	Sisma X SLD	4.8	0	0	0	60.916	0.472	8970	2535	Sisma Y SLD	0	4.8	0	0	60.916	0.472
8971	2536	Sisma X SLV	12.6	0	0	0	1.6E2	0.473	8972	2536	Sisma Y SLV	0	12.6	0	0	1.6E2	0.473
8973	2536	Sisma X SLD	12.4	0	0	0	1.6E2	0.473	8974	2536	Sisma Y SLD	0	12.4	0	0	1.6E2	0.473
8975	2537	Sisma X SLV	23.4	0	0	0	2.9E2	0.473	8976	2537	Sisma Y SLV	0	23.4	0	0	2.9E2	0.473
8977	2537	Sisma X SLD	23	0	0	0	2.9E2	0.473	8978	2537	Sisma Y SLD	0	23	0	0	2.9E2	0.473
8979	2538	Sisma X SLV	27	0	0	0	3.3E2	0.475	8980	2538	Sisma Y SLV	0	27	0	0	3.3E2	0.475
8981	2538	Sisma X SLD	26.5	0	0	0	3.3E2	0.475	8982	2538	Sisma Y SLD	0	26.5	0	0	3.3E2	0.475
8983	2539	Sisma X SLV	24.2	0	0	0	3.0E2	0.476	8984	2539	Sisma Y SLV	0	24.2	0	0	3.0E2	0.476
8985	2539	Sisma X SLD	23.8	0	0	0	3.0E2	0.476	8986	2539	Sisma Y SLD	0	23.8	0	0	3.0E2	0.476
8987	2540	Sisma X SLV	11.1	0	0	0	1.4E2	0.476	8988	2540	Sisma Y SLV	0	11.1	0	0	1.4E2	0.476
8989	2540	Sisma X SLD	10.9	0	0	0	1.4E2	0.476	8990	2540	Sisma Y SLD	0	10.9	0	0	1.4E2	0.476
8991	2541	Sisma X SLV	11.1	0	0	0	1.4E2	0.476	8992	2541	Sisma Y SLV	0	11.1	0	0	1.4E2	0.476
8993	2541	Sisma X SLD	10.9	0	0	0	1.4E2	0.476	8994	2541	Sisma Y SLD	0	10.9	0	0	1.4E2	0.476
8995	2542	Sisma X SLV	11.5	0	0	0	1.4E2	0.476	8996	2542	Sisma Y SLV	0	11.5	0	0	1.4E2	0.476
8997	2542	Sisma X SLD	11.3	0	0	0	1.4E2	0.476	8998	2542	Sisma Y SLD	0	11.3	0	0	1.4E2	0.476
8999	2543	Sisma X SLV	21.4	0	0	0	2.6E2	0.476	9000	2543	Sisma Y SLV	0	21.4	0	0	2.6E2	0.476
9001	2543	Sisma X SLD	21	0	0	0	2.6E2	0.476	9002	2543	Sisma Y SLD	0	21	0	0	2.6E2	0.476
9003	2544	Sisma X SLV	12	0	0	0	1.5E2	0.476	9004	2544	Sisma Y SLV	0	12	0	0	1.5E2	0.476
9005	2544	Sisma X SLD	11.8	0	0	0	1.5E2	0.476	9006	2544	Sisma Y SLD	0	11.8	0	0	1.5E2	0.476
9007	2545	Sisma X SLV	4.1	0	0	0	50.362	0.477	9008	2545	Sisma Y SLV	0	4.1	0	0	50.362	0.477
9009	2545	Sisma X SLD	4	0	0	0	50.362	0.477	9010	2545	Sisma Y SLD	0	4	0	0	50.362	0.477
9011	2546	Sisma X SLV	21.1	0	0	0	2.6E2	0.477	9012	2546	Sisma Y SLV	0	21.1	0	0	2.6E2	0.477
9013	2546	Sisma X SLD	20.8	0	0	0	2.6E2	0.477	9014	2546	Sisma Y SLD	0	20.8	0	0	2.6E2	0.477
9015	2547	Sisma X SLV	5.3	0	0	0	65.023	0.477	9016	2547	Sisma Y SLV	0	5.3	0	0	65.023	0.477
9017	2547	Sisma X SLD	5.2	0	0	0	65.023	0.477	9018	2547	Sisma Y SLD	0	5.2	0	0	65.023	0.477
9019	2548	Sisma X SLV	8.8	0	0	0	107.35	0.478	9020	2548	Sisma Y SLV	0	8.8	0	0	107.35	0.478
9021	2548	Sisma X SLD	8.6	0	0	0	107.35	0.478	9022	2548	Sisma Y SLD	0	8.6	0	0	107.35	0.478
9023	2549	Sisma X SLV	6	0	0	0	73.884	0.479	9024	2549	Sisma Y SLV	0	6	0	0	73.884	0.479
9025	2549	Sisma X SLD	5.9	0	0	0	73.884	0.479	9026	2549	Sisma Y SLD	0	5.9	0	0	73.884	0.479
9027	2550	Sisma X SLV	4.4	0	0	0	53.847	0.48	9028	2550	Sisma Y SLV	0	4.4	0	0	53.847	0.48
9029	2550	Sisma X SLD	4.3	0	0	0	53.847	0.48	9030	2550	Sisma Y SLD	0	4.3	0	0	53.847	0.48
9031	2551	Sisma X SLV	8.3	0	0	0	1.0E2	0.48	9032	2551	Sisma Y SLV	0	8.3	0	0	1.0E2	0.48
9033	2551	Sisma X SLD	8.2	0	0	0	1.0E2	0.48	9034	2551	Sisma Y SLD	0	8.2	0	0	1.0E2	0.48
9035	2552	Sisma X SLV	21	0	0	0	2.6E2	0.48	9036	2552	Sisma Y SLV	0	21	0	0	2.6E2	0.48
9037	2552	Sisma X SLD	20.6	0	0	0	2.6E2	0.48	9038	2552	Sisma Y SLD	0	20.6	0	0	2.6E2	0.48
9039	2553	Sisma X SLV	11.4	0	0	0	1.4E2	0.481	9040	2553	Sisma Y SLV	0	11.4	0	0	1.4E2	0.481
9041	2553	Sisma X SLD	11.2	0	0	0	1.4E2	0.481	9042	2553	Sisma Y SLD	0	11.2	0	0	1.4E2	0.481
9043	2554	Sisma X SLV	12	0	0	0	1.5E2	0.482	9044	2554	Sisma Y SLV	0	12	0	0	1.5E2	0.482
9045	2554	Sisma X SLD	11.8	0	0	0	1.5E2	0.482	9046	2554	Sisma Y SLD	0	11.8	0	0	1.5E2	0.482
9047	2555	Sisma X SLV	22.6	0	0	0	2.7E2	0.482	9048	2555	Sisma Y SLV	0	22.6	0	0	2.7E2	0.482
9049	2555	Sisma X SLD	22.2	0	0	0	2.7E2	0.482	9050	2555	Sisma Y SLD	0	22.2	0	0	2.7E2	0.482
9051	2556	Sisma X SLV	26	0	0	0	3.2E2	0.482	9052	2556	Sisma Y SLV	0	26	0	0	3.2E2	0.482
9053	2556	Sisma X SLD	25.6	0	0	0	3.2E2	0.482	9054	2556	Sisma Y SLD	0	25.6	0	0	3.2E2	0.482
9055	2557	Sisma X SLV	10.6	0	0	0	1.3E2	0.483	9056	2557	Sisma Y SLV	0	10.6	0	0	1.3E2	0.483
9057	2557	Sisma X SLD	10.4	0	0	0	1.3E2	0.483	9058	2557	Sisma Y SLD	0	10.4	0	0	1.3E2	0.483
9059	2558	Sisma X SLV	10.6	0	0	0	1.3E2	0.483	9060	2558	Sisma Y SLV	0	10.6	0	0	1.3E2	0.483
9061	2558	Sisma X SLD	10.4	0	0	0	1.3E2	0.483	9062	2558	Sisma Y SLD	0	10.4	0	0	1.3E2	0.483
9063	2559	Sisma X SLV	5.2	0	0	0	63.703	0.483	9064	2559	Sisma Y SLV	0	5.2	0	0	63.703	0.483
9065	2559	Sisma X SLD	5.2	0	0	0	63.703	0.483	9066	2559	Sisma Y SLD	0	5.2	0	0	63.703	0.483
9067	2560	Sisma X SLV	23.1	0	0	0	2.8E2	0.483	9068	2560	Sisma Y SLV	0	23.1	0	0	2.8E2	0.483
9069	2560	Sisma X SLD	22.7	0	0	0	2.8E2	0.483	9070	2560	Sisma Y SLD	0	22.7	0	0	2.8E2	0.483
9071	2561	Sisma X SLV	7.9	0	0	0	95.69	0.483	9072	2561	Sisma Y SLV	0	7.9	0	0	95.69	0.483
9073	2561	Sisma X SLD	7.8	0	0	0	95.69	0.483	9074	2561	Sisma Y SLD	0	7.8	0	0	95.69	0.483
9075	2562	Sisma X SLV	11	0	0	0	1.3E2	0.483	9076	2562	Sisma Y SLV	0	11	0	0	1.3E2	0.483
9077	2562	Sisma X SLD	10.9	0	0	0	1.3E2	0.483	9078	2562	Sisma Y SLD	0	10.9	0	0	1.3E2	0.483
9079	2563	Sisma X SLV	19.9	0	0	0	2.4E2	0.483	9080	2563	Sisma Y SLV	0	19.9	0	0	2.4E2	0.483
9081	2563	Sisma X SLD	19.6	0	0	0	2.4E2	0.483	9082	2563	Sisma Y SLD	0	19.6	0	0	2.4E2	0.483
9083	2564	Sisma X SLV	11.3	0	0	0	136.97	0.483	9084	2564	Sisma Y SLV	0	11.3	0	0	136.97	0.483
9085	2564	Sisma X SLD	11.1	0	0	0	136.97	0.483	9086	2564	Sisma Y SLD	0	11.1	0	0	136.97	0.483
9087	2565	Sisma X SLV	9.2	0	0	0	1.1E2	0.484	9088	2565	Sisma Y SLV	0	9.2	0	0	1.1E2	0.484
9089	2565	Sisma X SLD	9	0	0	0	1.1E2	0.484	9090	2565	Sisma Y SLD	0	9	0	0	1.1E2	0.484
9091	2566	Sisma X SLV	9.2	0	0	0	1.1E2	0.484	9092	2566	Sisma Y SLV	0	9.2	0	0	1.1E2	0.484
9093	2566	Sisma X SLD	9	0	0	0	1.1E2	0.484	9094	2566	Sisma Y SLD	0	9	0	0	1.1E2	0.484
9095	2567	Sisma X SLV	20.2	0	0	0	2.5E2	0.484	9096	2567	Sisma Y SLV	0	20.2	0	0	2.5E2	0.484
9097	2567	Sisma X SLD	19.9	0	0	0	2.5E2	0.484	9098	2567	Sisma Y SLD	0	19.9	0	0	2.5E2	0.484
9099	2568	Sisma X SLV	12.2	0	0	0	1.5E2	0.485	9100	2568	Sisma Y SLV	0	12.2	0	0	1.5E2	0.485
9101	2568	Sisma X SLD	12	0	0	0	1.5E2	0.485	9102	2568	Sisma Y SLD	0	12	0	0	1.5E2	0.485
9103	2569	Sisma X SLV	7.7	0	0	0	92.676	0.485	9104	2569	Sisma Y SLV	0	7.7	0	0	92.676	0.485
9105	2569	Sisma X SLD	7.5	0	0	0	92.676	0.485	9106	2569	Sisma Y SLD	0	7.5	0	0	92.676	0.485
9107	2570	Sisma X SLV	8.7	0	0	0	105.01	0.486	9108	2570	Sisma Y SLV	0	8.7	0	0	105.01	0.486
9109	2570	Sisma X SLD	8.6	0	0	0	105.01	0.486	9110	2570	Sisma Y SLD	0	8.6	0	0	105.01	0.486
9111	2571	Sisma X SLV	14.9	0	0	0	1.8E2	0.486	9112	2571	Sisma Y SLV	0	14.9	0	0	1.8E2	0.486
9113	2571	Sisma X SLD	14.6	0	0	0	1.8E2	0.486	9114	2571	Sisma Y SLD	0	14.6	0	0	1.8E2	0.486
9115	2572	Sisma X SLV	21.2	0	0	0	2.5E2	0.487	9116	2572	Sisma Y SLV	0	21.2	0	0	2.5E2	0.487
9117	2572	Sisma X SLD	20.8	0	0	0	2.5E2	0.487	9118	2572	Sisma Y SLD	0	20.8	0	0	2.5E2	0.487
9119	2573	Sisma X SLV	23.1	0	0	0	277.83	0.487	9120	2573	Sisma Y SLV	0	23.1	0	0	277.83	0.487
9121	2573	Sisma X SLD	22.7	0	0	0	277.83	0.487	9122	2573	Sisma Y SLD	0	22.7	0	0	277.83	0.487
9123	2574	Sisma X SLV	22.1	0	0	0	2.7E2	0.487	9124	2574	Sisma Y SLV	0	22.1	0	0	2.7E2	0.487

Indice	Nodo	Condizione	Fx	Fy	Fz	Mz	Peso	Gamma	Indice	Nodo	Condizione	Fx	Fy	Fz	Mz	Peso	Gamma
9125	2574	Sisma X SLD	21.8	0	0	0	2.7E2	0.487	9126	2574	Sisma Y SLD	0	21.8	0	0	2.7E2	0.487
9127	2575	Sisma X SLV	18.1	0	0	0	2.2E2	0.487	9128	2575	Sisma Y SLV	0	18.1	0	0	2.2E2	0.487
9129	2575	Sisma X SLD	17.8	0	0	0	2.2E2	0.487	9130	2575	Sisma Y SLD	0	17.8	0	0	2.2E2	0.487
9131	2576	Sisma X SLV	8.7	0	0	0	1.0E2	0.49	9132	2576	Sisma Y SLV	0	8.7	0	0	1.0E2	0.49
9133	2576	Sisma X SLD	8.5	0	0	0	1.0E2	0.49	9134	2576	Sisma Y SLD	0	8.5	0	0	1.0E2	0.49
9135	2577	Sisma X SLV	14.1	0	0	0	1.7E2	0.49	9136	2577	Sisma Y SLV	0	14.1	0	0	1.7E2	0.49
9137	2577	Sisma X SLD	13.9	0	0	0	1.7E2	0.49	9138	2577	Sisma Y SLD	0	13.9	0	0	1.7E2	0.49
9139	2578	Sisma X SLV	19.4	0	0	0	2.3E2	0.49	9140	2578	Sisma Y SLV	0	19.4	0	0	2.3E2	0.49
9141	2578	Sisma X SLD	19.1	0	0	0	2.3E2	0.49	9142	2578	Sisma Y SLD	0	19.1	0	0	2.3E2	0.49
9143	2579	Sisma X SLV	9.5	0	0	0	1.1E2	0.49	9144	2579	Sisma Y SLV	0	9.5	0	0	1.1E2	0.49
9145	2579	Sisma X SLD	9.4	0	0	0	1.1E2	0.49	9146	2579	Sisma Y SLD	0	9.4	0	0	1.1E2	0.49
9147	2580	Sisma X SLV	9.5	0	0	0	1.1E2	0.49	9148	2580	Sisma Y SLV	0	9.5	0	0	1.1E2	0.49
9149	2580	Sisma X SLD	9.4	0	0	0	1.1E2	0.49	9150	2580	Sisma Y SLD	0	9.4	0	0	1.1E2	0.49
9151	2581	Sisma X SLV	9.8	0	0	0	1.2E2	0.491	9152	2581	Sisma Y SLV	0	9.8	0	0	1.2E2	0.491
9153	2581	Sisma X SLD	9.6	0	0	0	1.2E2	0.491	9154	2581	Sisma Y SLD	0	9.6	0	0	1.2E2	0.491
9155	2582	Sisma X SLV	9.8	0	0	0	1.2E2	0.491	9156	2582	Sisma Y SLV	0	9.8	0	0	1.2E2	0.491
9157	2582	Sisma X SLD	9.6	0	0	0	1.2E2	0.491	9158	2582	Sisma Y SLD	0	9.6	0	0	1.2E2	0.491
9159	2583	Sisma X SLV	23	0	0	0	2.7E2	0.491	9160	2583	Sisma Y SLV	0	23	0	0	2.7E2	0.491
9161	2583	Sisma X SLD	22.6	0	0	0	2.7E2	0.491	9162	2583	Sisma Y SLD	0	22.6	0	0	2.7E2	0.491
9163	2584	Sisma X SLV	15.8	0	0	0	1.9E2	0.491	9164	2584	Sisma Y SLV	0	15.8	0	0	1.9E2	0.491
9165	2584	Sisma X SLD	15.6	0	0	0	1.9E2	0.491	9166	2584	Sisma Y SLD	0	15.6	0	0	1.9E2	0.491
9167	2585	Sisma X SLV	10.9	0	0	0	1.3E2	0.491	9168	2585	Sisma Y SLV	0	10.9	0	0	1.3E2	0.491
9169	2585	Sisma X SLD	10.7	0	0	0	1.3E2	0.491	9170	2585	Sisma Y SLD	0	10.7	0	0	1.3E2	0.491
9171	2586	Sisma X SLV	20.4	0	0	0	2.4E2	0.491	9172	2586	Sisma Y SLV	0	20.4	0	0	2.4E2	0.491
9173	2586	Sisma X SLD	20.1	0	0	0	2.4E2	0.491	9174	2586	Sisma Y SLD	0	20.1	0	0	2.4E2	0.491
9175	2587	Sisma X SLV	20.7	0	0	0	2.5E2	0.491	9176	2587	Sisma Y SLV	0	20.7	0	0	2.5E2	0.491
9177	2587	Sisma X SLD	20.4	0	0	0	2.5E2	0.491	9178	2587	Sisma Y SLD	0	20.4	0	0	2.5E2	0.491
9179	2588	Sisma X SLV	18.8	0	0	0	2.2E2	0.492	9180	2588	Sisma Y SLV	0	18.8	0	0	2.2E2	0.492
9181	2588	Sisma X SLD	18.5	0	0	0	2.2E2	0.492	9182	2588	Sisma Y SLD	0	18.5	0	0	2.2E2	0.492
9183	2589	Sisma X SLV	10.3	0	0	0	1.2E2	0.492	9184	2589	Sisma Y SLV	0	10.3	0	0	1.2E2	0.492
9185	2589	Sisma X SLD	10.1	0	0	0	1.2E2	0.492	9186	2589	Sisma Y SLD	0	10.1	0	0	1.2E2	0.492
9187	2590	Sisma X SLV	10.3	0	0	0	1.2E2	0.492	9188	2590	Sisma Y SLV	0	10.3	0	0	1.2E2	0.492
9189	2590	Sisma X SLD	10.1	0	0	0	1.2E2	0.492	9190	2590	Sisma Y SLD	0	10.1	0	0	1.2E2	0.492
9191	2591	Sisma X SLV	18.7	0	0	0	2.2E2	0.492	9192	2591	Sisma Y SLV	0	18.7	0	0	2.2E2	0.492
9193	2591	Sisma X SLD	18.4	0	0	0	2.2E2	0.492	9194	2591	Sisma Y SLD	0	18.4	0	0	2.2E2	0.492
9195	2592	Sisma X SLV	19.7	0	0	0	2.3E2	0.492	9196	2592	Sisma Y SLV	0	19.7	0	0	2.3E2	0.492
9197	2592	Sisma X SLD	19.4	0	0	0	2.3E2	0.492	9198	2592	Sisma Y SLD	0	19.4	0	0	2.3E2	0.492
9199	2593	Sisma X SLV	21	0	0	0	2.5E2	0.492	9200	2593	Sisma Y SLV	0	21	0	0	2.5E2	0.492
9201	2593	Sisma X SLD	20.6	0	0	0	2.5E2	0.492	9202	2593	Sisma Y SLD	0	20.6	0	0	2.5E2	0.492
9203	2594	Sisma X SLV	20.2	0	0	0	2.4E2	0.492	9204	2594	Sisma Y SLV	0	20.2	0	0	2.4E2	0.492
9205	2594	Sisma X SLD	19.9	0	0	0	2.4E2	0.492	9206	2594	Sisma Y SLD	0	19.9	0	0	2.4E2	0.492
9207	2595	Sisma X SLV	9.8	0	0	0	1.2E2	0.492	9208	2595	Sisma Y SLV	0	9.8	0	0	1.2E2	0.492
9209	2595	Sisma X SLD	9.6	0	0	0	1.2E2	0.492	9210	2595	Sisma Y SLD	0	9.6	0	0	1.2E2	0.492
9211	2596	Sisma X SLV	9.8	0	0	0	1.2E2	0.492	9212	2596	Sisma Y SLV	0	9.8	0	0	1.2E2	0.492
9213	2596	Sisma X SLD	9.6	0	0	0	1.2E2	0.492	9214	2596	Sisma Y SLD	0	9.6	0	0	1.2E2	0.492
9215	2597	Sisma X SLV	18.5	0	0	0	2.2E2	0.492	9216	2597	Sisma Y SLV	0	18.5	0	0	2.2E2	0.492
9217	2597	Sisma X SLD	18.3	0	0	0	2.2E2	0.492	9218	2597	Sisma Y SLD	0	18.3	0	0	2.2E2	0.492
9219	2598	Sisma X SLV	19.4	0	0	0	2.3E2	0.493	9220	2598	Sisma Y SLV	0	19.4	0	0	2.3E2	0.493
9221	2598	Sisma X SLD	19.1	0	0	0	2.3E2	0.493	9222	2598	Sisma Y SLD	0	19.1	0	0	2.3E2	0.493
9223	2599	Sisma X SLV	21.1	0	0	0	2.5E2	0.493	9224	2599	Sisma Y SLV	0	21.1	0	0	2.5E2	0.493
9225	2599	Sisma X SLD	20.8	0	0	0	2.5E2	0.493	9226	2599	Sisma Y SLD	0	20.8	0	0	2.5E2	0.493
9227	2600	Sisma X SLV	20	0	0	0	2.4E2	0.493	9228	2600	Sisma Y SLV	0	20	0	0	2.4E2	0.493
9229	2600	Sisma X SLD	19.7	0	0	0	2.4E2	0.493	9230	2600	Sisma Y SLD	0	19.7	0	0	2.4E2	0.493
9231	2601	Sisma X SLV	8.5	0	0	0	101.29	0.493	9232	2601	Sisma Y SLV	0	8.5	0	0	101.29	0.493
9233	2601	Sisma X SLD	8.4	0	0	0	101.29	0.493	9234	2601	Sisma Y SLD	0	8.4	0	0	101.29	0.493
9235	2602	Sisma X SLV	18.8	0	0	0	2.2E2	0.494	9236	2602	Sisma Y SLV	0	18.8	0	0	2.2E2	0.494
9237	2602	Sisma X SLD	18.5	0	0	0	2.2E2	0.494	9238	2602	Sisma Y SLD	0	18.5	0	0	2.2E2	0.494
9239	2603	Sisma X SLV	8.8	0	0	0	1.0E2	0.494	9240	2603	Sisma Y SLV	0	8.8	0	0	1.0E2	0.494
9241	2603	Sisma X SLD	8.7	0	0	0	1.0E2	0.494	9242	2603	Sisma Y SLD	0	8.7	0	0	1.0E2	0.494
9243	2604	Sisma X SLV	10.4	0	0	0	123.83	0.494	9244	2604	Sisma Y SLV	0	10.4	0	0	123.83	0.494
9245	2604	Sisma X SLD	10.3	0	0	0	123.83	0.494	9246	2604	Sisma Y SLD	0	10.3	0	0	123.83	0.494
9247	2605	Sisma X SLV	19.5	0	0	0	2.3E2	0.494	9248	2605	Sisma Y SLV	0	19.5	0	0	2.3E2	0.494
9249	2605	Sisma X SLD	19.1	0	0	0	2.3E2	0.494	9250	2605	Sisma Y SLD	0	19.1	0	0	2.3E2	0.494
9251	2606	Sisma X SLV	10.3	0	0	0	1.2E2	0.494	9252	2606	Sisma Y SLV	0	10.3	0	0	1.2E2	0.494
9253	2606	Sisma X SLD	10.2	0	0	0	1.2E2	0.494	9254	2606	Sisma Y SLD	0	10.2	0	0	1.2E2	0.494
9255	2607	Sisma X SLV	19.1	0	0	0	2.3E2	0.494	9256	2607	Sisma Y SLV	0	19.1	0	0	2.3E2	0.494
9257	2607	Sisma X SLD	18.8	0	0	0	2.3E2	0.494	9258	2607	Sisma Y SLD	0	18.8	0	0	2.3E2	0.494
9259	2608	Sisma X SLV	15.9	0	0	0	1.9E2	0.495	9260	2608	Sisma Y SLV	0	15.9	0	0	1.9E2	0.495
9261	2608	Sisma X SLD	15.7	0	0	0	1.9E2	0.495	9262	2608	Sisma Y SLD	0	15.7	0	0	1.9E2	0.495
9263	2609	Sisma X SLV	18.1	0	0	0	2.1E2	0.497	9264	2609	Sisma Y SLV	0	18.1	0	0	2.1E2	0.497
9265	2609	Sisma X SLD	17.8	0	0	0	2.1E2	0.497	9266	2609	Sisma Y SLD	0	17.8	0	0	2.1E2	0.497
9267	2610	Sisma X SLV	4.3	0	0	0	50.046	0.5	9268	2610	Sisma Y SLV	0	4.3	0	0	50.046	0.5
9269	2610	Sisma X SLD	4.2	0	0	0	50.046	0.5	9270	2610	Sisma Y SLD	0	4.2	0	0	50.046	0.5
9271	2611	Sisma X SLV	19.5	0	0	0	2.3E2	0.503	9272	2611	Sisma Y SLV	0	19.5	0	0	2.3E2	0.503
9273	2611	Sisma X SLD	19.2	0	0	0	2.3E2	0.503	9274	2611	Sisma Y SLD	0	19.2	0	0	2.3E2	0.503
9275	2612	Sisma X SLV	6.6	0	0	0	77.157	0.504	9276	2612	Sisma Y SLV	0	6.6	0	0	77.157	0.504
9277	2612	Sisma X SLD	6.5	0	0	0	77.157	0.504	9278	2612	Sisma Y SLD	0	6.5	0	0	77.157	0.504
9279	2613	Sisma X SLV	4.9	0	0	0	56.943	0.505	9280	2613	Sisma Y SLV	0	4.9	0	0	56.943	0.505
9281	2613	Sisma X SLD	4.8	0	0	0	56.943	0.505	9282	2613	Sisma Y SLD	0	4.8	0	0	56.943	0.505
9283	2614	Sisma X SLV	5.2	0	0	0	60.046	0.509	9284	2614	Sisma Y SLV	0	5.2	0	0	60.046	0.509
9285	2614	Sisma X SLD	5.1	0	0	0	60.046	0.509	9286	2614	Sisma Y SLD	0	5.1	0	0	60.046	0.509
9287	2615	Sisma X SLV	5.8	0	0	0	67.228	0.509	9288	2615	Sisma Y SLV	0	5.8	0	0	67.228	0.509
9289	2615	Sisma X SLD	5.7	0	0	0	67.228	0.509	9290	2615	Sisma Y SLD	0	5.7	0	0	67.228	0.509
9291	2616	Sisma X SLV	30.8	0	0	0	3.5E2	0.512	9292	2616	Sisma Y SLV	0	30.8	0	0	3.5E2	0.512
9293	2616	Sisma X SLD	30.3	0	0	0	3.5E2	0.512	9294	2616	Sisma Y SLD	0	30.3	0	0	3.5E2	0.512
9295	2617	Sisma X SLV	30.1	0	0	0	3.4E2	0.512	9296	2617	Sisma Y SLV	0	30.1	0	0	3.4E2	0.512
9297	2617	Sisma X SLD	29.6	0	0	0	3.4E2	0.512	9298	2617	Sisma Y SLD	0	29.6	0	0	3.4E2	0.512
9299	2618	Sisma X SLV	35.9	0	0	0	4.1E2	0.512	9300	2618	Sisma Y SLV	0	35.9	0	0	4.1E2	0.512
9301	2618	Sisma X SLD	35.3	0	0	0	4.1E2	0.512	9302	2618	Sisma Y SLD	0	35.3	0	0	4.1E2	0.512
9303	2619	Sisma X SLV	27	0	0	0	3.1E2	0.512	9304	2619	Sisma Y SLV	0	27	0	0	3.1E2	0.512
9305	2619	Sisma X SLD	26.6	0	0	0	3.1E2	0.512	9306	2619	Sisma Y SLD	0	26.6	0	0	3.1E2	0.512
9307	2620	Sisma X SLV	25.4	0	0	0	2.9E2	0.513	9308	2620	Sisma Y SLV	0	25.4	0	0	2.9E2	0.513
9309	2620	Sisma X SLD	25	0	0	0	2.9E2	0.513	9310	2620	Sisma Y SLD	0	25	0	0	2.9E2	0.513
9311	2621	Sisma X SLV	25.5	0	0	0	2.9E2	0.513	9312	2621	Sisma Y SLV	0	25.5	0	0	2.9E2	0.513
9313	2621	Sisma X SLD	25.1	0	0	0	2.9E2	0.513	9314	2621	Sisma Y SLD	0	25.1	0	0	2.9E2	0.513
9315	2622	Sisma X SLV	26.6	0	0	0	3.0E2	0.513	9316	2622	Sisma Y SLV	0	26.6	0	0	3.0E2	0.513
9317	2622	Sisma X SLD	26.2	0	0	0	3.0E2	0.513	9318	2622	Sisma Y SLD	0	26.2	0	0	3.0E2	0.513
9319	2623	Sisma X SLV	29.1	0	0	0	3.3E2	0.513	9320	2623	Sisma Y SLV	0	29.1	0	0	3.3E2	0.513
9321	2623	Sisma X SLD	28.6	0	0	0	3.3E2	0.513	9322	2623	Sisma Y SLD	0	28.6	0	0	3.3E2	0.513
9323	2624	Sisma X SLV	28.1	0	0	0	3.2E2	0.514	9324	2624	Sisma Y SLV	0	28.1	0	0	3.2E2	0.514
9325	2624	Sisma X SLD	27.7	0	0	0	3.2E2	0.514	9326	2624	Sisma Y SLD	0	27.7	0	0	3.2E2	0.514
9327	2625	Sisma X SLV	30.7	0	0	0	3.5E2	0.514	9328	2625	Sisma Y SLV	0	30.7	0	0	3.5E2	0.514
9329	2625	Sisma X SLD	30.2	0	0	0	3.5E2	0.514	9330	2625	Sisma Y SLD	0	30.2	0	0	3.5E2	0.514
9331	2626	Sisma X SLV	28	0	0	0	3.2E2	0.514	9332	2626	Sisma Y SLV	0	28	0	0	3.2E2	0.514

muratura

Indice	Nodo	Condizione	Fx	Fy	Fz	Mz	Peso	Gamma	Indice	Nodo	Condizione	Fx	Fy	Fz	Mz	Peso	Gamma
9333	2626	Sisma X SLD	27.6	0	0	0	3.2E2	0.514	9334	2626	Sisma Y SLD	0	27.6	0	0	3.2E2	0.514
9335	2627	Sisma X SLV	25.3	0	0	0	2.9E2	0.514	9336	2627	Sisma Y SLV	0	25.3	0	0	2.9E2	0.514
9337	2627	Sisma X SLD	24.9	0	0	0	2.9E2	0.514	9338	2627	Sisma Y SLD	0	24.9	0	0	2.9E2	0.514
9339	2628	Sisma X SLV	25.3	0	0	0	2.9E2	0.514	9340	2628	Sisma Y SLV	0	25.3	0	0	2.9E2	0.514
9341	2628	Sisma X SLD	24.9	0	0	0	2.9E2	0.514	9342	2628	Sisma Y SLD	0	24.9	0	0	2.9E2	0.514
9343	2629	Sisma X SLV	26.7	0	0	0	3.0E2	0.514	9344	2629	Sisma Y SLV	0	26.7	0	0	3.0E2	0.514
9345	2629	Sisma X SLD	26.3	0	0	0	3.0E2	0.514	9346	2629	Sisma Y SLD	0	26.3	0	0	3.0E2	0.514
9347	2630	Sisma X SLV	26.7	0	0	0	3.0E2	0.514	9348	2630	Sisma Y SLV	0	26.7	0	0	3.0E2	0.514
9349	2630	Sisma X SLD	26.3	0	0	0	3.0E2	0.514	9350	2630	Sisma Y SLD	0	26.3	0	0	3.0E2	0.514
9351	2631	Sisma X SLV	27.5	0	0	0	3.1E2	0.514	9352	2631	Sisma Y SLV	0	27.5	0	0	3.1E2	0.514
9353	2631	Sisma X SLD	27	0	0	0	3.1E2	0.514	9354	2631	Sisma Y SLD	0	27	0	0	3.1E2	0.514
9355	2632	Sisma X SLV	9.2	0	0	0	1.0E2	0.514	9356	2632	Sisma Y SLV	0	9.2	0	0	1.0E2	0.514
9357	2632	Sisma X SLD	9	0	0	0	1.0E2	0.514	9358	2632	Sisma Y SLD	0	9	0	0	1.0E2	0.514
9359	2633	Sisma X SLV	27.3	0	0	0	3.1E2	0.514	9360	2633	Sisma Y SLV	0	27.3	0	0	3.1E2	0.514
9361	2633	Sisma X SLD	26.8	0	0	0	3.1E2	0.514	9362	2633	Sisma Y SLD	0	26.8	0	0	3.1E2	0.514
9363	2634	Sisma X SLV	26.8	0	0	0	3.1E2	0.515	9364	2634	Sisma Y SLV	0	26.8	0	0	3.1E2	0.515
9365	2634	Sisma X SLD	26.4	0	0	0	3.1E2	0.515	9366	2634	Sisma Y SLD	0	26.4	0	0	3.1E2	0.515
9367	2635	Sisma X SLV	25.6	0	0	0	2.9E2	0.515	9368	2635	Sisma Y SLV	0	25.6	0	0	2.9E2	0.515
9369	2635	Sisma X SLD	25.2	0	0	0	2.9E2	0.515	9370	2635	Sisma Y SLD	0	25.2	0	0	2.9E2	0.515
9371	2636	Sisma X SLV	28	0	0	0	3.2E2	0.515	9372	2636	Sisma Y SLV	0	28	0	0	3.2E2	0.515
9373	2636	Sisma X SLD	27.6	0	0	0	3.2E2	0.515	9374	2636	Sisma Y SLD	0	27.6	0	0	3.2E2	0.515
9375	2637	Sisma X SLV	26.3	0	0	0	3.0E2	0.515	9376	2637	Sisma Y SLV	0	26.3	0	0	3.0E2	0.515
9377	2637	Sisma X SLD	25.9	0	0	0	3.0E2	0.515	9378	2637	Sisma Y SLD	0	25.9	0	0	3.0E2	0.515
9379	2638	Sisma X SLV	26.9	0	0	0	3.1E2	0.515	9380	2638	Sisma Y SLV	0	26.9	0	0	3.1E2	0.515
9381	2638	Sisma X SLD	26.5	0	0	0	3.1E2	0.515	9382	2638	Sisma Y SLD	0	26.5	0	0	3.1E2	0.515
9383	2639	Sisma X SLV	27.3	0	0	0	3.1E2	0.515	9384	2639	Sisma Y SLV	0	27.3	0	0	3.1E2	0.515
9385	2639	Sisma X SLD	26.8	0	0	0	3.1E2	0.515	9386	2639	Sisma Y SLD	0	26.8	0	0	3.1E2	0.515
9387	2640	Sisma X SLV	25.1	0	0	0	2.9E2	0.515	9388	2640	Sisma Y SLV	0	25.1	0	0	2.9E2	0.515
9389	2640	Sisma X SLD	24.7	0	0	0	2.9E2	0.515	9390	2640	Sisma Y SLD	0	24.7	0	0	2.9E2	0.515
9391	2641	Sisma X SLV	26.4	0	0	0	3.0E2	0.515	9392	2641	Sisma Y SLV	0	26.4	0	0	3.0E2	0.515
9393	2641	Sisma X SLD	26	0	0	0	3.0E2	0.515	9394	2641	Sisma Y SLD	0	26	0	0	3.0E2	0.515
9395	2642	Sisma X SLV	25.4	0	0	0	2.9E2	0.515	9396	2642	Sisma Y SLV	0	25.4	0	0	2.9E2	0.515
9397	2642	Sisma X SLD	25	0	0	0	2.9E2	0.515	9398	2642	Sisma Y SLD	0	25	0	0	2.9E2	0.515
9399	2643	Sisma X SLV	25.1	0	0	0	2.9E2	0.515	9400	2643	Sisma Y SLV	0	25.1	0	0	2.9E2	0.515
9401	2643	Sisma X SLD	24.7	0	0	0	2.9E2	0.515	9402	2643	Sisma Y SLD	0	24.7	0	0	2.9E2	0.515
9403	2644	Sisma X SLV	26.7	0	0	0	3.0E2	0.515	9404	2644	Sisma Y SLV	0	26.7	0	0	3.0E2	0.515
9405	2644	Sisma X SLD	26.2	0	0	0	3.0E2	0.515	9406	2644	Sisma Y SLD	0	26.2	0	0	3.0E2	0.515
9407	2645	Sisma X SLV	29.2	0	0	0	3.3E2	0.515	9408	2645	Sisma Y SLV	0	29.2	0	0	3.3E2	0.515
9409	2645	Sisma X SLD	28.8	0	0	0	3.3E2	0.515	9410	2645	Sisma Y SLD	0	28.8	0	0	3.3E2	0.515
9411	2646	Sisma X SLV	27.9	0	0	0	3.2E2	0.515	9412	2646	Sisma Y SLV	0	27.9	0	0	3.2E2	0.515
9413	2646	Sisma X SLD	27.5	0	0	0	3.2E2	0.515	9414	2646	Sisma Y SLD	0	27.5	0	0	3.2E2	0.515
9415	2647	Sisma X SLV	26.8	0	0	0	3.0E2	0.516	9416	2647	Sisma Y SLV	0	26.8	0	0	3.0E2	0.516
9417	2647	Sisma X SLD	26.3	0	0	0	3.0E2	0.516	9418	2647	Sisma Y SLD	0	26.3	0	0	3.0E2	0.516
9419	2648	Sisma X SLV	27.9	0	0	0	3.2E2	0.516	9420	2648	Sisma Y SLV	0	27.9	0	0	3.2E2	0.516
9421	2648	Sisma X SLD	27.5	0	0	0	3.2E2	0.516	9422	2648	Sisma Y SLD	0	27.5	0	0	3.2E2	0.516
9423	2649	Sisma X SLV	26.9	0	0	0	3.1E2	0.516	9424	2649	Sisma Y SLV	0	26.9	0	0	3.1E2	0.516
9425	2649	Sisma X SLD	26.5	0	0	0	3.1E2	0.516	9426	2649	Sisma Y SLD	0	26.5	0	0	3.1E2	0.516
9427	2650	Sisma X SLV	27.6	0	0	0	3.1E2	0.516	9428	2650	Sisma Y SLV	0	27.6	0	0	3.1E2	0.516
9429	2650	Sisma X SLD	27.2	0	0	0	3.1E2	0.516	9430	2650	Sisma Y SLD	0	27.2	0	0	3.1E2	0.516
9431	2651	Sisma X SLV	26.6	0	0	0	3.0E2	0.516	9432	2651	Sisma Y SLV	0	26.6	0	0	3.0E2	0.516
9433	2651	Sisma X SLD	26.2	0	0	0	3.0E2	0.516	9434	2651	Sisma Y SLD	0	26.2	0	0	3.0E2	0.516
9435	2652	Sisma X SLV	26.9	0	0	0	3.1E2	0.516	9436	2652	Sisma Y SLV	0	26.9	0	0	3.1E2	0.516
9437	2652	Sisma X SLD	26.5	0	0	0	3.1E2	0.516	9438	2652	Sisma Y SLD	0	26.5	0	0	3.1E2	0.516
9439	2653	Sisma X SLV	27.7	0	0	0	3.2E2	0.516	9440	2653	Sisma Y SLV	0	27.7	0	0	3.2E2	0.516
9441	2653	Sisma X SLD	27.3	0	0	0	3.2E2	0.516	9442	2653	Sisma Y SLD	0	27.3	0	0	3.2E2	0.516
9443	2654	Sisma X SLV	26.7	0	0	0	3.0E2	0.516	9444	2654	Sisma Y SLV	0	26.7	0	0	3.0E2	0.516
9445	2654	Sisma X SLD	26.3	0	0	0	3.0E2	0.516	9446	2654	Sisma Y SLD	0	26.3	0	0	3.0E2	0.516
9447	2655	Sisma X SLV	24.2	0	0	0	274.99	0.516	9448	2655	Sisma Y SLV	0	24.2	0	0	274.99	0.516
9449	2655	Sisma X SLD	23.8	0	0	0	274.99	0.516	9450	2655	Sisma Y SLD	0	23.8	0	0	274.99	0.516
9451	2656	Sisma X SLV	25.8	0	0	0	2.9E2	0.516	9452	2656	Sisma Y SLV	0	25.8	0	0	2.9E2	0.516
9453	2656	Sisma X SLD	25.4	0	0	0	2.9E2	0.516	9454	2656	Sisma Y SLD	0	25.4	0	0	2.9E2	0.516
9455	2657	Sisma X SLV	26.9	0	0	0	3.1E2	0.516	9456	2657	Sisma Y SLV	0	26.9	0	0	3.1E2	0.516
9457	2657	Sisma X SLD	26.4	0	0	0	3.1E2	0.516	9458	2657	Sisma Y SLD	0	26.4	0	0	3.1E2	0.516
9459	2658	Sisma X SLV	26.7	0	0	0	3.0E2	0.516	9460	2658	Sisma Y SLV	0	26.7	0	0	3.0E2	0.516
9461	2658	Sisma X SLD	26.2	0	0	0	3.0E2	0.516	9462	2658	Sisma Y SLD	0	26.2	0	0	3.0E2	0.516
9463	2659	Sisma X SLV	23.4	0	0	0	2.7E2	0.516	9464	2659	Sisma Y SLV	0	23.4	0	0	2.7E2	0.516
9465	2659	Sisma X SLD	23	0	0	0	2.7E2	0.516	9466	2659	Sisma Y SLD	0	23	0	0	2.7E2	0.516
9467	2660	Sisma X SLV	25.1	0	0	0	2.8E2	0.516	9468	2660	Sisma Y SLV	0	25.1	0	0	2.8E2	0.516
9469	2660	Sisma X SLD	24.7	0	0	0	2.8E2	0.516	9470	2660	Sisma Y SLD	0	24.7	0	0	2.8E2	0.516
9471	2661	Sisma X SLV	27.1	0	0	0	3.1E2	0.516	9472	2661	Sisma Y SLV	0	27.1	0	0	3.1E2	0.516
9473	2661	Sisma X SLD	26.7	0	0	0	3.1E2	0.516	9474	2661	Sisma Y SLD	0	26.7	0	0	3.1E2	0.516
9475	2662	Sisma X SLV	27.3	0	0	0	309.66	0.516	9476	2662	Sisma Y SLV	0	27.3	0	0	309.66	0.516
9477	2662	Sisma X SLD	26.8	0	0	0	309.66	0.516	9478	2662	Sisma Y SLD	0	26.8	0	0	309.66	0.516
9479	2663	Sisma X SLV	5.8	0	0	0	65.678	0.516	9480	2663	Sisma Y SLV	0	5.8	0	0	65.678	0.516
9481	2663	Sisma X SLD	5.7	0	0	0	65.678	0.516	9482	2663	Sisma Y SLD	0	5.7	0	0	65.678	0.516
9483	2664	Sisma X SLV	27.5	0	0	0	3.1E2	0.517	9484	2664	Sisma Y SLV	0	27.5	0	0	3.1E2	0.517
9485	2664	Sisma X SLD	27.1	0	0	0	3.1E2	0.517	9486	2664	Sisma Y SLD	0	27.1	0	0	3.1E2	0.517
9487	2665	Sisma X SLV	26.5	0	0	0	3.0E2	0.517	9488	2665	Sisma Y SLV	0	26.5	0	0	3.0E2	0.517
9489	2665	Sisma X SLD	26.1	0	0	0	3.0E2	0.517	9490	2665	Sisma Y SLD	0	26.1	0	0	3.0E2	0.517
9491	2666	Sisma X SLV	27.3	0	0	0	3.1E2	0.517	9492	2666	Sisma Y SLV	0	27.3	0	0	3.1E2	0.517
9493	2666	Sisma X SLD	26.9	0	0	0	3.1E2	0.517	9494	2666	Sisma Y SLD	0	26.9	0	0	3.1E2	0.517
9495	2667	Sisma X SLV	25.8	0	0	0	2.9E2	0.517	9496	2667	Sisma Y SLV	0	25.8	0	0	2.9E2	0.517
9497	2667	Sisma X SLD	25.4	0	0	0	2.9E2	0.517	9498	2667	Sisma Y SLD	0	25.4	0	0	2.9E2	0.517
9499	2668	Sisma X SLV	27	0	0	0	306.23	0.517	9500	2668	Sisma Y SLV	0	27	0	0	306.23	0.517
9501	2668	Sisma X SLD	26.6	0	0	0	306.23	0.517	9502	2668	Sisma Y SLD	0	26.6	0	0	306.23	0.517
9503	2669	Sisma X SLV	26.7	0	0	0	3.0E2	0.517	9504	2669	Sisma Y SLV	0	26.7	0	0	3.0E2	0.517
9505	2669	Sisma X SLD	26.3	0	0	0	3.0E2	0.517	9506	2669	Sisma Y SLD	0	26.3	0	0	3.0E2	0.517
9507	2670	Sisma X SLV	28	0	0	0	3.2E2	0.517	9508	2670	Sisma Y SLV	0	28	0	0	3.2E2	0.517
9509	2670	Sisma X SLD	27.5	0	0	0	3.2E2	0.517	9510	2670	Sisma Y SLD	0	27.5	0	0	3.2E2	0.517
9511	2671	Sisma X SLV	26.5	0	0	0	3.0E2	0.517	9512	2671	Sisma Y SLV	0	26.5	0	0	3.0E2	0.517
9513	2671	Sisma X SLD	26.1	0	0	0	3.0E2	0.517	9514	2671	Sisma Y SLD	0	26.1	0	0	3.0E2	0.517
9515	2672	Sisma X SLV	25.1	0	0	0	2.8E2	0.517	9516	2672	Sisma Y SLV	0	25.1	0	0	2.8E2	0.517
9517	2672	Sisma X SLD	24.7	0	0	0	2.8E2	0.517	9518	2672	Sisma Y SLD	0	24.7	0	0	2.8E2	0.517
9519	2673	Sisma X SLV	26.9	0	0	0	3.0E2	0.517	9520	2673	Sisma Y SLV	0	26.9	0	0	3.0E2	0.517
9521	2673	Sisma X SLD	26.5	0	0	0	3.0E2	0.517	9522	2673	Sisma Y SLD	0	26.5	0	0	3.0E2	0.517
9523	2674	Sisma X SLV	8.5	0	0	0	96.103	0.518	9524	2674	Sisma Y SLV	0	8.5	0	0	96.103	0.518
9525	2674	Sisma X SLD	8.4	0	0	0	96.103	0.518	9526	2674	Sisma Y SLD	0	8.4	0	0	96.103	0.518
9527	2675	Sisma X SLV	25.1	0	0	0	2.8E2	0.518	9528	2675	Sisma Y SLV	0	25.1	0	0	2.8E2	0.518
9529	2675	Sisma X SLD	24.7	0	0	0	2.8E2	0.518	9530	2675	Sisma Y SLD	0	24.7	0	0	2.8E2	0.518
9531	2676	Sisma X SLV	8	0	0	0	90.626	0.518	9532	2676	Sisma Y SLV	0	8	0	0	90.626	0.518
9533	2676	Sisma X SLD	7.9	0	0	0	90.626	0.518	9534	2676	Sisma Y SLD	0	7.9	0	0	90.626	0.518

Indice	Nodo	Condizione	Fx	Fy	Fz	Mz	Peso	Gamma	Indice	Nodo	Condizione	Fx	Fy	Fz	Mz	Peso	Gamma
9535	2677	Sisma X SLV	25.1	0	0	0	2.8E2	0.519	9536	2677	Sisma Y SLV	0	25.1	0	0	2.8E2	0.519
9537	2677	Sisma X SLD	24.7	0	0	0	2.8E2	0.519	9538	2677	Sisma Y SLD	0	24.7	0	0	2.8E2	0.519
9539	2678	Sisma X SLV	23.2	0	0	0	2.6E2	0.519	9540	2678	Sisma Y SLV	0	23.2	0	0	2.6E2	0.519
9541	2678	Sisma X SLD	22.8	0	0	0	2.6E2	0.519	9542	2678	Sisma Y SLD	0	22.8	0	0	2.6E2	0.519
9543	2679	Sisma X SLV	28.2	0	0	0	3.2E2	0.519	9544	2679	Sisma Y SLV	0	28.2	0	0	3.2E2	0.519
9545	2679	Sisma X SLD	27.8	0	0	0	3.2E2	0.519	9546	2679	Sisma Y SLD	0	27.8	0	0	3.2E2	0.519
9547	2680	Sisma X SLV	26	0	0	0	2.9E2	0.519	9548	2680	Sisma Y SLV	0	26	0	0	2.9E2	0.519
9549	2680	Sisma X SLD	25.6	0	0	0	2.9E2	0.519	9550	2680	Sisma Y SLD	0	25.6	0	0	2.9E2	0.519
9551	2681	Sisma X SLV	26.2	0	0	0	295.15	0.519	9552	2681	Sisma Y SLV	0	26.2	0	0	295.15	0.519
9553	2681	Sisma X SLD	25.7	0	0	0	295.15	0.519	9554	2681	Sisma Y SLD	0	25.7	0	0	295.15	0.519
9555	2682	Sisma X SLV	25	0	0	0	2.8E2	0.519	9556	2682	Sisma Y SLV	0	25	0	0	2.8E2	0.519
9557	2682	Sisma X SLD	24.6	0	0	0	2.8E2	0.519	9558	2682	Sisma Y SLD	0	24.6	0	0	2.8E2	0.519
9559	2683	Sisma X SLV	25.6	0	0	0	289.15	0.519	9560	2683	Sisma Y SLV	0	25.6	0	0	289.15	0.519
9561	2683	Sisma X SLD	25.2	0	0	0	289.15	0.519	9562	2683	Sisma Y SLD	0	25.2	0	0	289.15	0.519
9563	2684	Sisma X SLV	27.1	0	0	0	3.1E2	0.519	9564	2684	Sisma Y SLV	0	27.1	0	0	3.1E2	0.519
9565	2684	Sisma X SLD	26.7	0	0	0	3.1E2	0.519	9566	2684	Sisma Y SLD	0	26.7	0	0	3.1E2	0.519
9567	2685	Sisma X SLV	24.7	0	0	0	2.8E2	0.519	9568	2685	Sisma Y SLV	0	24.7	0	0	2.8E2	0.519
9569	2685	Sisma X SLD	24.4	0	0	0	2.8E2	0.519	9570	2685	Sisma Y SLD	0	24.4	0	0	2.8E2	0.519
9571	2686	Sisma X SLV	22.8	0	0	0	2.6E2	0.519	9572	2686	Sisma Y SLV	0	22.8	0	0	2.6E2	0.519
9573	2686	Sisma X SLD	22.4	0	0	0	2.6E2	0.519	9574	2686	Sisma Y SLD	0	22.4	0	0	2.6E2	0.519
9575	2687	Sisma X SLV	26.2	0	0	0	3.0E2	0.52	9576	2687	Sisma Y SLV	0	26.2	0	0	3.0E2	0.52
9577	2687	Sisma X SLD	25.8	0	0	0	3.0E2	0.52	9578	2687	Sisma Y SLD	0	25.8	0	0	3.0E2	0.52
9579	2688	Sisma X SLV	25.7	0	0	0	2.9E2	0.52	9580	2688	Sisma Y SLV	0	25.7	0	0	2.9E2	0.52
9581	2688	Sisma X SLD	25.3	0	0	0	2.9E2	0.52	9582	2688	Sisma Y SLD	0	25.3	0	0	2.9E2	0.52
9583	2689	Sisma X SLV	28	0	0	0	3.2E2	0.52	9584	2689	Sisma Y SLV	0	28	0	0	3.2E2	0.52
9585	2689	Sisma X SLD	27.6	0	0	0	3.2E2	0.52	9586	2689	Sisma Y SLD	0	27.6	0	0	3.2E2	0.52
9587	2690	Sisma X SLV	25.5	0	0	0	2.9E2	0.52	9588	2690	Sisma Y SLV	0	25.5	0	0	2.9E2	0.52
9589	2690	Sisma X SLD	25.1	0	0	0	2.9E2	0.52	9590	2690	Sisma Y SLD	0	25.1	0	0	2.9E2	0.52
9591	2691	Sisma X SLV	25	0	0	0	2.8E2	0.52	9592	2691	Sisma Y SLV	0	25	0	0	2.8E2	0.52
9593	2691	Sisma X SLD	24.6	0	0	0	2.8E2	0.52	9594	2691	Sisma Y SLD	0	24.6	0	0	2.8E2	0.52
9595	2692	Sisma X SLV	10.1	0	0	0	1.1E2	0.52	9596	2692	Sisma Y SLV	0	10.1	0	0	1.1E2	0.52
9597	2692	Sisma X SLD	9.9	0	0	0	1.1E2	0.52	9598	2692	Sisma Y SLD	0	9.9	0	0	1.1E2	0.52
9599	2693	Sisma X SLV	25	0	0	0	2.8E2	0.521	9600	2693	Sisma Y SLV	0	25	0	0	2.8E2	0.521
9601	2693	Sisma X SLD	24.6	0	0	0	2.8E2	0.521	9602	2693	Sisma Y SLD	0	24.6	0	0	2.8E2	0.521
9603	2694	Sisma X SLV	26.8	0	0	0	3.0E2	0.521	9604	2694	Sisma Y SLV	0	26.8	0	0	3.0E2	0.521
9605	2694	Sisma X SLD	26.4	0	0	0	3.0E2	0.521	9606	2694	Sisma Y SLD	0	26.4	0	0	3.0E2	0.521
9607	2695	Sisma X SLV	10.2	0	0	0	1.1E2	0.521	9608	2695	Sisma Y SLV	0	10.2	0	0	1.1E2	0.521
9609	2695	Sisma X SLD	10	0	0	0	1.1E2	0.521	9610	2695	Sisma Y SLD	0	10	0	0	1.1E2	0.521
9611	2696	Sisma X SLV	23.4	0	0	0	2.6E2	0.521	9612	2696	Sisma Y SLV	0	23.4	0	0	2.6E2	0.521
9613	2696	Sisma X SLD	23	0	0	0	2.6E2	0.521	9614	2696	Sisma Y SLD	0	23	0	0	2.6E2	0.521
9615	2697	Sisma X SLV	10	0	0	0	1.1E2	0.521	9616	2697	Sisma Y SLV	0	10	0	0	1.1E2	0.521
9617	2697	Sisma X SLD	9.9	0	0	0	1.1E2	0.521	9618	2697	Sisma Y SLD	0	9.9	0	0	1.1E2	0.521
9619	2698	Sisma X SLV	25.3	0	0	0	2.8E2	0.522	9620	2698	Sisma Y SLV	0	25.3	0	0	2.8E2	0.522
9621	2698	Sisma X SLD	24.9	0	0	0	2.8E2	0.522	9622	2698	Sisma Y SLD	0	24.9	0	0	2.8E2	0.522
9623	2699	Sisma X SLV	26.7	0	0	0	3.0E2	0.522	9624	2699	Sisma Y SLV	0	26.7	0	0	3.0E2	0.522
9625	2699	Sisma X SLD	26.2	0	0	0	3.0E2	0.522	9626	2699	Sisma Y SLD	0	26.2	0	0	3.0E2	0.522
9627	2700	Sisma X SLV	24.5	0	0	0	2.8E2	0.522	9628	2700	Sisma Y SLV	0	24.5	0	0	2.8E2	0.522
9629	2700	Sisma X SLD	24.1	0	0	0	2.8E2	0.522	9630	2700	Sisma Y SLD	0	24.1	0	0	2.8E2	0.522
9631	2701	Sisma X SLV	25	0	0	0	281.19	0.522	9632	2701	Sisma Y SLV	0	25	0	0	281.19	0.522
9633	2701	Sisma X SLD	24.6	0	0	0	281.19	0.522	9634	2701	Sisma Y SLD	0	24.6	0	0	281.19	0.522
9635	2702	Sisma X SLV	23.2	0	0	0	2.6E2	0.522	9636	2702	Sisma Y SLV	0	23.2	0	0	2.6E2	0.522
9637	2702	Sisma X SLD	22.8	0	0	0	2.6E2	0.522	9638	2702	Sisma Y SLD	0	22.8	0	0	2.6E2	0.522
9639	2703	Sisma X SLV	9.6	0	0	0	1.1E2	0.522	9640	2703	Sisma Y SLV	0	9.6	0	0	1.1E2	0.522
9641	2703	Sisma X SLD	9.4	0	0	0	1.1E2	0.522	9642	2703	Sisma Y SLD	0	9.4	0	0	1.1E2	0.522
9643	2704	Sisma X SLV	9.9	0	0	0	1.1E2	0.522	9644	2704	Sisma Y SLV	0	9.9	0	0	1.1E2	0.522
9645	2704	Sisma X SLD	9.8	0	0	0	1.1E2	0.522	9646	2704	Sisma Y SLD	0	9.8	0	0	1.1E2	0.522
9647	2705	Sisma X SLV	9.5	0	0	0	1.1E2	0.522	9648	2705	Sisma Y SLV	0	9.5	0	0	1.1E2	0.522
9649	2705	Sisma X SLD	9.4	0	0	0	1.1E2	0.522	9650	2705	Sisma Y SLD	0	9.4	0	0	1.1E2	0.522
9651	2706	Sisma X SLV	26.3	0	0	0	294.73	0.522	9652	2706	Sisma Y SLV	0	26.3	0	0	294.73	0.522
9653	2706	Sisma X SLD	25.8	0	0	0	294.73	0.522	9654	2706	Sisma Y SLD	0	25.8	0	0	294.73	0.522
9655	2707	Sisma X SLV	26	0	0	0	2.9E2	0.522	9656	2707	Sisma Y SLV	0	26	0	0	2.9E2	0.522
9657	2707	Sisma X SLD	25.6	0	0	0	2.9E2	0.522	9658	2707	Sisma Y SLD	0	25.6	0	0	2.9E2	0.522
9659	2708	Sisma X SLV	25	0	0	0	2.8E2	0.522	9660	2708	Sisma Y SLV	0	25	0	0	2.8E2	0.522
9661	2708	Sisma X SLD	24.6	0	0	0	2.8E2	0.522	9662	2708	Sisma Y SLD	0	24.6	0	0	2.8E2	0.522
9663	2709	Sisma X SLV	9.3	0	0	0	1.0E2	0.523	9664	2709	Sisma Y SLV	0	9.3	0	0	1.0E2	0.523
9665	2709	Sisma X SLD	9.2	0	0	0	1.0E2	0.523	9666	2709	Sisma Y SLD	0	9.2	0	0	1.0E2	0.523
9667	2710	Sisma X SLV	8.5	0	0	0	95.364	0.523	9668	2710	Sisma Y SLV	0	8.5	0	0	95.364	0.523
9669	2710	Sisma X SLD	8.4	0	0	0	95.364	0.523	9670	2710	Sisma Y SLD	0	8.4	0	0	95.364	0.523
9671	2711	Sisma X SLV	6.1	0	0	0	68.66	0.523	9672	2711	Sisma Y SLV	0	6.1	0	0	68.66	0.523
9673	2711	Sisma X SLD	6	0	0	0	68.66	0.523	9674	2711	Sisma Y SLD	0	6	0	0	68.66	0.523
9675	2712	Sisma X SLV	25.2	0	0	0	2.8E2	0.523	9676	2712	Sisma Y SLV	0	25.2	0	0	2.8E2	0.523
9677	2712	Sisma X SLD	24.8	0	0	0	2.8E2	0.523	9678	2712	Sisma Y SLD	0	24.8	0	0	2.8E2	0.523
9679	2713	Sisma X SLV	26.5	0	0	0	3.0E2	0.523	9680	2713	Sisma Y SLV	0	26.5	0	0	3.0E2	0.523
9681	2713	Sisma X SLD	26.1	0	0	0	3.0E2	0.523	9682	2713	Sisma Y SLD	0	26.1	0	0	3.0E2	0.523
9683	2714	Sisma X SLV	24.6	0	0	0	2.8E2	0.523	9684	2714	Sisma Y SLV	0	24.6	0	0	2.8E2	0.523
9685	2714	Sisma X SLD	24.2	0	0	0	2.8E2	0.523	9686	2714	Sisma Y SLD	0	24.2	0	0	2.8E2	0.523
9687	2715	Sisma X SLV	25.2	0	0	0	2.8E2	0.523	9688	2715	Sisma Y SLV	0	25.2	0	0	2.8E2	0.523
9689	2715	Sisma X SLD	24.8	0	0	0	2.8E2	0.523	9690	2715	Sisma Y SLD	0	24.8	0	0	2.8E2	0.523
9691	2716	Sisma X SLV	25.1	0	0	0	2.8E2	0.523	9692	2716	Sisma Y SLV	0	25.1	0	0	2.8E2	0.523
9693	2716	Sisma X SLD	24.7	0	0	0	2.8E2	0.523	9694	2716	Sisma Y SLD	0	24.7	0	0	2.8E2	0.523
9695	2717	Sisma X SLV	26.4	0	0	0	3.0E2	0.523	9696	2717	Sisma Y SLV	0	26.4	0	0	3.0E2	0.523
9697	2717	Sisma X SLD	26	0	0	0	3.0E2	0.523	9698	2717	Sisma Y SLD	0	26	0	0	3.0E2	0.523
9699	2718	Sisma X SLV	24.6	0	0	0	2.8E2	0.523	9700	2718	Sisma Y SLV	0	24.6	0	0	2.8E2	0.523
9701	2718	Sisma X SLD	24.2	0	0	0	2.8E2	0.523	9702	2718	Sisma Y SLD	0	24.2	0	0	2.8E2	0.523
9703	2719	Sisma X SLV	24.8	0	0	0	2.8E2	0.523	9704	2719	Sisma Y SLV	0	24.8	0	0	2.8E2	0.523
9705	2719	Sisma X SLD	24.4	0	0	0	2.8E2	0.523	9706	2719	Sisma Y SLD	0	24.4	0	0	2.8E2	0.523
9707	2720	Sisma X SLV	25.1	0	0	0	2.8E2	0.523	9708	2720	Sisma Y SLV	0	25.1	0	0	2.8E2	0.523
9709	2720	Sisma X SLD	24.7	0	0	0	2.8E2	0.523	9710	2720	Sisma Y SLD	0	24.7	0	0	2.8E2	0.523
9711	2721	Sisma X SLV	24.6	0	0	0	2.8E2	0.523	9712	2721	Sisma Y SLV	0	24.6	0	0	2.8E2	0.523
9713	2721	Sisma X SLD	24.2	0	0	0	2.8E2	0.523	9714	2721	Sisma Y SLD	0	24.2	0	0	2.8E2	0.523
9715	2722	Sisma X SLV	26.4	0	0	0	3.0E2	0.523	9716	2722	Sisma Y SLV	0	26.4	0	0	3.0E2	0.523
9717	2722	Sisma X SLD	26	0	0	0	3.0E2	0.523	9718	2722	Sisma Y SLD	0	26	0	0	3.0E2	0.523
9719	2723	Sisma X SLV	24.7	0	0	0	2.8E2	0.523	9720	2723	Sisma Y SLV	0	24.7	0	0	2.8E2	0.523
9721	2723	Sisma X SLD	24.3	0	0	0	2.8E2	0.523	9722	2723	Sisma Y SLD	0	24.3	0	0	2.8E2	0.523
9723	2724	Sisma X SLV	25.1	0	0	0	2.8E2	0.523	9724	2724	Sisma Y SLV	0	25.1	0	0	2.8E2	0.523
9725	2724	Sisma X SLD	24.7	0	0	0	2.8E2	0.523	9726	2724	Sisma Y SLD	0	24.7	0	0	2.8E2	0.523
9727	2725	Sisma X SLV	24.7	0	0	0	2.8E2	0.523	9728	2725	Sisma Y SLV	0	24.7	0	0	2.8E2	0.523
9729	2725	Sisma X SLD	24.3	0	0	0	2.8E2	0.523	9730	2725	Sisma Y SLD	0	24.3	0	0	2.8E2	0.523
9731	2726	Sisma X SLV	25.1	0	0	0	2.8E2	0.523	9732	2726	Sisma Y SLV	0	25.1	0	0	2.8E2	0.523
9733	2726	Sisma X SLD	24.7	0	0	0	2.8E2	0.523	9734	2726	Sisma Y SLD	0	24.7	0	0	2.8E2	0.523
9735	2727	Sisma X SLV	24.7	0	0	0	2.8E2	0.523	9736	2727	Sisma Y SLV	0	24.7	0	0	2.8E2	0.523
9737	2727	Sisma X SLD	24.3	0	0	0	2.8E2	0.523	9738	2727	Sisma Y SLD	0	24.3	0	0	2.8E2	0.523
9739	2728	Sisma X SLV	24.2	0	0	0	2.7E2	0.523	9740	2728	Sisma Y SLV	0	24.2	0	0	2.7E2	0.523
9741	2728	Sisma X SLD	23.9	0	0	0	2.7E2	0.523	9742	2728	Sisma Y SLD	0	23.9	0	0	2.7E2	0.523

Indice	Nodo	Condizione	Fx	Fy	Fz	Mz	Peso	Gamma	Indice	Nodo	Condizione	Fx	Fy	Fz	Mz	Peso	Gamma
9743	2729	Sisma X SLV	39.8	0	0	0	4.5E2	0.523	9744	2729	Sisma Y SLV	0	39.8	0	0	4.5E2	0.523
9745	2729	Sisma X SLD	39.2	0	0	0	4.5E2	0.523	9746	2729	Sisma Y SLD	0	39.2	0	0	4.5E2	0.523
9747	2730	Sisma X SLV	38.8	0	0	0	4.3E2	0.523	9748	2730	Sisma Y SLV	0	38.8	0	0	4.3E2	0.523
9749	2730	Sisma X SLD	38.2	0	0	0	4.3E2	0.523	9750	2730	Sisma Y SLD	0	38.2	0	0	4.3E2	0.523
9751	2731	Sisma X SLV	25.1	0	0	0	2.8E2	0.523	9752	2731	Sisma Y SLV	0	25.1	0	0	2.8E2	0.523
9753	2731	Sisma X SLD	24.7	0	0	0	2.8E2	0.523	9754	2731	Sisma Y SLD	0	24.7	0	0	2.8E2	0.523
9755	2732	Sisma X SLV	24.5	0	0	0	2.7E2	0.523	9756	2732	Sisma Y SLV	0	24.5	0	0	2.7E2	0.523
9757	2732	Sisma X SLD	24.1	0	0	0	2.7E2	0.523	9758	2732	Sisma Y SLD	0	24.1	0	0	2.7E2	0.523
9759	2733	Sisma X SLV	26.7	0	0	0	3.0E2	0.523	9760	2733	Sisma Y SLV	0	26.7	0	0	3.0E2	0.523
9761	2733	Sisma X SLD	26.3	0	0	0	3.0E2	0.523	9762	2733	Sisma Y SLD	0	26.3	0	0	3.0E2	0.523
9763	2734	Sisma X SLV	26.7	0	0	0	3.0E2	0.523	9764	2734	Sisma Y SLV	0	26.7	0	0	3.0E2	0.523
9765	2734	Sisma X SLD	26.3	0	0	0	3.0E2	0.523	9766	2734	Sisma Y SLD	0	26.3	0	0	3.0E2	0.523
9767	2735	Sisma X SLV	27.3	0	0	0	3.1E2	0.523	9768	2735	Sisma Y SLV	0	27.3	0	0	3.1E2	0.523
9769	2735	Sisma X SLD	26.8	0	0	0	3.1E2	0.523	9770	2735	Sisma Y SLD	0	26.8	0	0	3.1E2	0.523
9771	2736	Sisma X SLV	27.3	0	0	0	3.1E2	0.523	9772	2736	Sisma Y SLV	0	27.3	0	0	3.1E2	0.523
9773	2736	Sisma X SLD	26.8	0	0	0	3.1E2	0.523	9774	2736	Sisma Y SLD	0	26.8	0	0	3.1E2	0.523
9775	2737	Sisma X SLV	28.1	0	0	0	314.45	0.523	9776	2737	Sisma Y SLV	0	28.1	0	0	314.45	0.523
9777	2737	Sisma X SLD	27.6	0	0	0	314.45	0.523	9778	2737	Sisma Y SLD	0	27.6	0	0	314.45	0.523
9779	2738	Sisma X SLV	28.1	0	0	0	314.45	0.523	9780	2738	Sisma Y SLV	0	28.1	0	0	314.45	0.523
9781	2738	Sisma X SLD	27.6	0	0	0	314.45	0.523	9782	2738	Sisma Y SLD	0	27.6	0	0	314.45	0.523
9783	2739	Sisma X SLV	29	0	0	0	324.3	0.523	9784	2739	Sisma Y SLV	0	29	0	0	324.3	0.523
9785	2739	Sisma X SLD	28.5	0	0	0	324.3	0.523	9786	2739	Sisma Y SLD	0	28.5	0	0	324.3	0.523
9787	2740	Sisma X SLV	29	0	0	0	324.3	0.523	9788	2740	Sisma Y SLV	0	29	0	0	324.3	0.523
9789	2740	Sisma X SLD	28.5	0	0	0	324.3	0.523	9790	2740	Sisma Y SLD	0	28.5	0	0	324.3	0.523
9791	2741	Sisma X SLV	29.7	0	0	0	3.3E2	0.523	9792	2741	Sisma Y SLV	0	29.7	0	0	3.3E2	0.523
9793	2741	Sisma X SLD	29.2	0	0	0	3.3E2	0.523	9794	2741	Sisma Y SLD	0	29.2	0	0	3.3E2	0.523
9795	2742	Sisma X SLV	29.7	0	0	0	3.3E2	0.523	9796	2742	Sisma Y SLV	0	29.7	0	0	3.3E2	0.523
9797	2742	Sisma X SLD	29.2	0	0	0	3.3E2	0.523	9798	2742	Sisma Y SLD	0	29.2	0	0	3.3E2	0.523
9799	2743	Sisma X SLV	30.2	0	0	0	3.4E2	0.523	9800	2743	Sisma Y SLV	0	30.2	0	0	3.4E2	0.523
9801	2743	Sisma X SLD	29.7	0	0	0	3.4E2	0.523	9802	2743	Sisma Y SLD	0	29.7	0	0	3.4E2	0.523
9803	2744	Sisma X SLV	30.2	0	0	0	3.4E2	0.523	9804	2744	Sisma Y SLV	0	30.2	0	0	3.4E2	0.523
9805	2744	Sisma X SLD	29.7	0	0	0	3.4E2	0.523	9806	2744	Sisma Y SLD	0	29.7	0	0	3.4E2	0.523
9807	2745	Sisma X SLV	30.5	0	0	0	3.4E2	0.523	9808	2745	Sisma Y SLV	0	30.5	0	0	3.4E2	0.523
9809	2745	Sisma X SLD	30	0	0	0	3.4E2	0.523	9810	2745	Sisma Y SLD	0	30	0	0	3.4E2	0.523
9811	2746	Sisma X SLV	30.5	0	0	0	3.4E2	0.523	9812	2746	Sisma Y SLV	0	30.5	0	0	3.4E2	0.523
9813	2746	Sisma X SLD	30	0	0	0	3.4E2	0.523	9814	2746	Sisma Y SLD	0	30	0	0	3.4E2	0.523
9815	2747	Sisma X SLV	30.7	0	0	0	3.4E2	0.523	9816	2747	Sisma Y SLV	0	30.7	0	0	3.4E2	0.523
9817	2747	Sisma X SLD	30.2	0	0	0	3.4E2	0.523	9818	2747	Sisma Y SLD	0	30.2	0	0	3.4E2	0.523
9819	2748	Sisma X SLV	30.7	0	0	0	3.4E2	0.523	9820	2748	Sisma Y SLV	0	30.7	0	0	3.4E2	0.523
9821	2748	Sisma X SLD	30.2	0	0	0	3.4E2	0.523	9822	2748	Sisma Y SLD	0	30.2	0	0	3.4E2	0.523
9823	2749	Sisma X SLV	30.8	0	0	0	3.4E2	0.523	9824	2749	Sisma Y SLV	0	30.8	0	0	3.4E2	0.523
9825	2749	Sisma X SLD	30.3	0	0	0	3.4E2	0.523	9826	2749	Sisma Y SLD	0	30.3	0	0	3.4E2	0.523
9827	2750	Sisma X SLV	30.8	0	0	0	3.4E2	0.523	9828	2750	Sisma Y SLV	0	30.8	0	0	3.4E2	0.523
9829	2750	Sisma X SLD	30.3	0	0	0	3.4E2	0.523	9830	2750	Sisma Y SLD	0	30.3	0	0	3.4E2	0.523
9831	2751	Sisma X SLV	30.8	0	0	0	3.5E2	0.523	9832	2751	Sisma Y SLV	0	30.8	0	0	3.5E2	0.523
9833	2751	Sisma X SLD	30.3	0	0	0	3.5E2	0.523	9834	2751	Sisma Y SLD	0	30.3	0	0	3.5E2	0.523
9835	2752	Sisma X SLV	30.8	0	0	0	3.5E2	0.523	9836	2752	Sisma Y SLV	0	30.8	0	0	3.5E2	0.523
9837	2752	Sisma X SLD	30.3	0	0	0	3.5E2	0.523	9838	2752	Sisma Y SLD	0	30.3	0	0	3.5E2	0.523
9839	2753	Sisma X SLV	30.8	0	0	0	3.5E2	0.523	9840	2753	Sisma Y SLV	0	30.8	0	0	3.5E2	0.523
9841	2753	Sisma X SLD	30.3	0	0	0	3.5E2	0.523	9842	2753	Sisma Y SLD	0	30.3	0	0	3.5E2	0.523
9843	2754	Sisma X SLV	30.8	0	0	0	3.5E2	0.523	9844	2754	Sisma Y SLV	0	30.8	0	0	3.5E2	0.523
9845	2754	Sisma X SLD	30.3	0	0	0	3.5E2	0.523	9846	2754	Sisma Y SLD	0	30.3	0	0	3.5E2	0.523
9847	2755	Sisma X SLV	42.7	0	0	0	4.8E2	0.523	9848	2755	Sisma Y SLV	0	42.7	0	0	4.8E2	0.523
9849	2755	Sisma X SLD	42.1	0	0	0	4.8E2	0.523	9850	2755	Sisma Y SLD	0	42.1	0	0	4.8E2	0.523
9851	2756	Sisma X SLV	43.3	0	0	0	4.9E2	0.523	9852	2756	Sisma Y SLV	0	43.3	0	0	4.9E2	0.523
9853	2756	Sisma X SLD	42.7	0	0	0	4.9E2	0.523	9854	2756	Sisma Y SLD	0	42.7	0	0	4.9E2	0.523
9855	2757	Sisma X SLV	29.1	0	0	0	3.3E2	0.523	9856	2757	Sisma Y SLV	0	29.1	0	0	3.3E2	0.523
9857	2757	Sisma X SLD	28.6	0	0	0	3.3E2	0.523	9858	2757	Sisma Y SLD	0	28.6	0	0	3.3E2	0.523
9859	2758	Sisma X SLV	29.1	0	0	0	325.74	0.523	9860	2758	Sisma Y SLV	0	29.1	0	0	325.74	0.523
9861	2758	Sisma X SLD	28.6	0	0	0	325.74	0.523	9862	2758	Sisma Y SLD	0	28.6	0	0	325.74	0.523
9863	2759	Sisma X SLV	29.1	0	0	0	3.3E2	0.523	9864	2759	Sisma Y SLV	0	29.1	0	0	3.3E2	0.523
9865	2759	Sisma X SLD	28.6	0	0	0	3.3E2	0.523	9866	2759	Sisma Y SLD	0	28.6	0	0	3.3E2	0.523
9867	2760	Sisma X SLV	29.1	0	0	0	3.3E2	0.523	9868	2760	Sisma Y SLV	0	29.1	0	0	3.3E2	0.523
9869	2760	Sisma X SLD	28.6	0	0	0	3.3E2	0.523	9870	2760	Sisma Y SLD	0	28.6	0	0	3.3E2	0.523
9871	2761	Sisma X SLV	29	0	0	0	3.2E2	0.523	9872	2761	Sisma Y SLV	0	29	0	0	3.2E2	0.523
9873	2761	Sisma X SLD	28.5	0	0	0	3.2E2	0.523	9874	2761	Sisma Y SLD	0	28.5	0	0	3.2E2	0.523
9875	2762	Sisma X SLV	28.9	0	0	0	3.2E2	0.523	9876	2762	Sisma Y SLV	0	28.9	0	0	3.2E2	0.523
9877	2762	Sisma X SLD	28.5	0	0	0	3.2E2	0.523	9878	2762	Sisma Y SLD	0	28.5	0	0	3.2E2	0.523
9879	2763	Sisma X SLV	28.8	0	0	0	3.2E2	0.523	9880	2763	Sisma Y SLV	0	28.8	0	0	3.2E2	0.523
9881	2763	Sisma X SLD	28.4	0	0	0	3.2E2	0.523	9882	2763	Sisma Y SLD	0	28.4	0	0	3.2E2	0.523
9883	2764	Sisma X SLV	28.8	0	0	0	3.2E2	0.523	9884	2764	Sisma Y SLV	0	28.8	0	0	3.2E2	0.523
9885	2764	Sisma X SLD	28.3	0	0	0	3.2E2	0.523	9886	2764	Sisma Y SLD	0	28.3	0	0	3.2E2	0.523
9887	2765	Sisma X SLV	28.8	0	0	0	3.2E2	0.523	9888	2765	Sisma Y SLV	0	28.8	0	0	3.2E2	0.523
9889	2765	Sisma X SLD	28.3	0	0	0	3.2E2	0.523	9890	2765	Sisma Y SLD	0	28.3	0	0	3.2E2	0.523
9891	2766	Sisma X SLV	28.9	0	0	0	3.2E2	0.523	9892	2766	Sisma Y SLV	0	28.9	0	0	3.2E2	0.523
9893	2766	Sisma X SLD	28.4	0	0	0	3.2E2	0.523	9894	2766	Sisma Y SLD	0	28.4	0	0	3.2E2	0.523
9895	2767	Sisma X SLV	29	0	0	0	3.2E2	0.523	9896	2767	Sisma Y SLV	0	29	0	0	3.2E2	0.523
9897	2767	Sisma X SLD	28.5	0	0	0	3.2E2	0.523	9898	2767	Sisma Y SLD	0	28.5	0	0	3.2E2	0.523
9899	2768	Sisma X SLV	31.5	0	0	0	352.64	0.523	9900	2768	Sisma Y SLV	0	31.5	0	0	352.64	0.523
9901	2768	Sisma X SLD	31	0	0	0	352.64	0.523	9902	2768	Sisma Y SLD	0	31	0	0	352.64	0.523
9903	2769	Sisma X SLV	37.6	0	0	0	4.2E2	0.523	9904	2769	Sisma Y SLV	0	37.6	0	0	4.2E2	0.523
9905	2769	Sisma X SLD	37	0	0	0	4.2E2	0.523	9906	2769	Sisma Y SLD	0	37	0	0	4.2E2	0.523
9907	2770	Sisma X SLV	37	0	0	0	4.1E2	0.523	9908	2770	Sisma Y SLV	0	37	0	0	4.1E2	0.523
9909	2770	Sisma X SLD	36.4	0	0	0	4.1E2	0.523	9910	2770	Sisma Y SLD	0	36.4	0	0	4.1E2	0.523
9911	2771	Sisma X SLV	32.1	0	0	0	3.6E2	0.523	9912	2771	Sisma Y SLV	0	32.1	0	0	3.6E2	0.523
9913	2771	Sisma X SLD	31.6	0	0	0	3.6E2	0.523	9914	2771	Sisma Y SLD	0	31.6	0	0	3.6E2	0.523
9915	2772	Sisma X SLV	32.1	0	0	0	3.6E2	0.523	9916	2772	Sisma Y SLV	0	32.1	0	0	3.6E2	0.523
9917	2772	Sisma X SLD	31.6	0	0	0	3.6E2	0.523	9918	2772	Sisma Y SLD	0	31.6	0	0	3.6E2	0.523
9919	2773	Sisma X SLV	32	0	0	0	3.6E2	0.523	9920	2773	Sisma Y SLV	0	32	0	0	3.6E2	0.523
9921	2773	Sisma X SLD	31.5	0	0	0	3.6E2	0.523	9922	2773	Sisma Y SLD	0	31.5	0	0	3.6E2	0.523
9923	2774	Sisma X SLV	31.8	0	0	0	3.6E2	0.523	9924	2774	Sisma Y SLV	0	31.8	0	0	3.6E2	0.523
9925	2774	Sisma X SLD	31.3	0	0	0	3.6E2	0.523	9926	2774	Sisma Y SLD	0	31.3	0	0	3.6E2	0.523
9927	2775	Sisma X SLV	31.4	0	0	0	3.5E2	0.523	9928	2775	Sisma Y SLV	0	31.4	0	0	3.5E2	0.523
9929	2775	Sisma X SLD	30.9	0	0	0	3.5E2	0.523	9930	2775	Sisma Y SLD	0	30.9	0	0	3.5E2	0.523
9931	2776	Sisma X SLV	31	0	0	0	3.5E2	0.523	9932	2776	Sisma Y SLV	0	31	0	0	3.5E2	0.523
9933	2776	Sisma X SLD	30.5	0	0	0	3.5E2	0.523	9934	2776	Sisma Y SLD	0	30.5	0	0	3.5E2	0.523
9935	2777	Sisma X SLV	30.5	0	0	0	3.4E2	0.523	9936	2777	Sisma Y SLV	0	30.5	0	0	3.4E2	0.523
9937	2777	Sisma X SLD	30	0	0	0	3.4E2	0.523	9938	2777	Sisma Y SLD	0	30	0	0	3.4E2	0.523
9939	2778	Sisma X SLV	30.2	0	0	0	3.4E2	0.523	9940	2778	Sisma Y SLV	0	30.2	0	0	3.4E2	0.523
9941	2778	Sisma X SLD	29.7	0	0	0	3.4E2	0.523	9942	2778	Sisma Y SLD	0	29.7	0	0	3.4E2	0.523
9943	2779	Sisma X SLV	30	0	0	0	3.4E2	0.523	9944	2779	Sisma Y SLV	0	30	0	0	3.4E2	0.523

Indice	Nodo	Condizione	Fx	Fy	Fz	Mz	Peso	Gamma	Indice	Nodo	Condizione	Fx	Fy	Fz	Mz	Peso	Gamma
9945	2779	Sisma X SLD	29.5	0	0	0	3.4E2	0.523	9946	2779	Sisma Y SLD	0	29.5	0	0	3.4E2	0.523
9947	2780	Sisma X SLV	29.9	0	0	0	3.3E2	0.523	9948	2780	Sisma Y SLV	0	29.9	0	0	3.3E2	0.523
9949	2780	Sisma X SLD	29.4	0	0	0	3.3E2	0.523	9950	2780	Sisma Y SLD	0	29.4	0	0	3.3E2	0.523
9951	2781	Sisma X SLV	26.3	0	0	0	3.0E2	0.523	9952	2781	Sisma Y SLV	0	26.3	0	0	3.0E2	0.523
9953	2781	Sisma X SLD	25.9	0	0	0	3.0E2	0.523	9954	2781	Sisma Y SLD	0	25.9	0	0	3.0E2	0.523
9955	2782	Sisma X SLV	24.7	0	0	0	2.8E2	0.523	9956	2782	Sisma Y SLV	0	24.7	0	0	2.8E2	0.523
9957	2782	Sisma X SLD	24.3	0	0	0	2.8E2	0.523	9958	2782	Sisma Y SLD	0	24.3	0	0	2.8E2	0.523
9959	2783	Sisma X SLV	41	0	0	0	4.6E2	0.523	9960	2783	Sisma Y SLV	0	41	0	0	4.6E2	0.523
9961	2783	Sisma X SLD	40.3	0	0	0	4.6E2	0.523	9962	2783	Sisma Y SLD	0	40.3	0	0	4.6E2	0.523
9963	2784	Sisma X SLV	41.6	0	0	0	465.47	0.523	9964	2784	Sisma Y SLV	0	41.6	0	0	465.47	0.523
9965	2784	Sisma X SLD	40.9	0	0	0	465.47	0.523	9966	2784	Sisma Y SLD	0	40.9	0	0	465.47	0.523
9967	2785	Sisma X SLV	25.3	0	0	0	2.8E2	0.523	9968	2785	Sisma Y SLV	0	25.3	0	0	2.8E2	0.523
9969	2785	Sisma X SLD	24.9	0	0	0	2.8E2	0.523	9970	2785	Sisma Y SLD	0	24.9	0	0	2.8E2	0.523
9971	2786	Sisma X SLV	15.2	0	0	0	1.7E2	0.524	9972	2786	Sisma Y SLV	0	15.2	0	0	1.7E2	0.524
9973	2786	Sisma X SLD	14.9	0	0	0	1.7E2	0.524	9974	2786	Sisma Y SLD	0	14.9	0	0	1.7E2	0.524
9975	2787	Sisma X SLV	13.2	0	0	0	1.5E2	0.525	9976	2787	Sisma Y SLV	0	13.2	0	0	1.5E2	0.525
9977	2787	Sisma X SLD	13	0	0	0	1.5E2	0.525	9978	2787	Sisma Y SLD	0	13	0	0	1.5E2	0.525
9979	2788	Sisma X SLV	13.2	0	0	0	1.5E2	0.525	9980	2788	Sisma Y SLV	0	13.2	0	0	1.5E2	0.525
9981	2788	Sisma X SLD	13	0	0	0	1.5E2	0.525	9982	2788	Sisma Y SLD	0	13	0	0	1.5E2	0.525
9983	2789	Sisma X SLV	25	0	0	0	278.96	0.525	9984	2789	Sisma Y SLV	0	25	0	0	278.96	0.525
9985	2789	Sisma X SLD	24.6	0	0	0	278.96	0.525	9986	2789	Sisma Y SLD	0	24.6	0	0	278.96	0.525
9987	2790	Sisma X SLV	7.2	0	0	0	80.302	0.525	9988	2790	Sisma Y SLV	0	7.2	0	0	80.302	0.525
9989	2790	Sisma X SLD	7.1	0	0	0	80.302	0.525	9990	2790	Sisma Y SLD	0	7.1	0	0	80.302	0.525
9991	2791	Sisma X SLV	14.4	0	0	0	160.19	0.525	9992	2791	Sisma Y SLV	0	14.4	0	0	160.19	0.525
9993	2791	Sisma X SLD	14.1	0	0	0	160.19	0.525	9994	2791	Sisma Y SLD	0	14.1	0	0	160.19	0.525
9995	2792	Sisma X SLV	13.5	0	0	0	1.5E2	0.526	9996	2792	Sisma Y SLV	0	13.5	0	0	1.5E2	0.526
9997	2792	Sisma X SLD	13.3	0	0	0	1.5E2	0.526	9998	2792	Sisma Y SLD	0	13.3	0	0	1.5E2	0.526
9999	2793	Sisma X SLV	28.6	0	0	0	3.2E2	0.526	10000	2793	Sisma Y SLV	0	28.6	0	0	3.2E2	0.526
10001	2793	Sisma X SLD	28.2	0	0	0	3.2E2	0.526	10002	2793	Sisma Y SLD	0	28.2	0	0	3.2E2	0.526
10003	2794	Sisma X SLV	27.5	0	0	0	306.15	0.526	10004	2794	Sisma Y SLV	0	27.5	0	0	306.15	0.526
10005	2794	Sisma X SLD	27	0	0	0	306.15	0.526	10006	2794	Sisma Y SLD	0	27	0	0	306.15	0.526
10007	2795	Sisma X SLV	13.2	0	0	0	1.5E2	0.526	10008	2795	Sisma Y SLV	0	13.2	0	0	1.5E2	0.526
10009	2795	Sisma X SLD	13	0	0	0	1.5E2	0.526	10010	2795	Sisma Y SLD	0	13	0	0	1.5E2	0.526
10011	2796	Sisma X SLV	13.2	0	0	0	1.5E2	0.526	10012	2796	Sisma Y SLV	0	13.2	0	0	1.5E2	0.526
10013	2796	Sisma X SLD	13	0	0	0	1.5E2	0.526	10014	2796	Sisma Y SLD	0	13	0	0	1.5E2	0.526
10015	2797	Sisma X SLV	30.6	0	0	0	341.09	0.526	10016	2797	Sisma Y SLV	0	30.6	0	0	341.09	0.526
10017	2797	Sisma X SLD	30.1	0	0	0	341.09	0.526	10018	2797	Sisma Y SLD	0	30.1	0	0	341.09	0.526
10019	2798	Sisma X SLV	24.9	0	0	0	2.8E2	0.526	10020	2798	Sisma Y SLV	0	24.9	0	0	2.8E2	0.526
10021	2798	Sisma X SLD	24.5	0	0	0	2.8E2	0.526	10022	2798	Sisma Y SLD	0	24.5	0	0	2.8E2	0.526
10023	2799	Sisma X SLV	12.7	0	0	0	1.4E2	0.527	10024	2799	Sisma Y SLV	0	12.7	0	0	1.4E2	0.527
10025	2799	Sisma X SLD	12.5	0	0	0	1.4E2	0.527	10026	2799	Sisma Y SLD	0	12.5	0	0	1.4E2	0.527
10027	2800	Sisma X SLV	12.7	0	0	0	1.4E2	0.527	10028	2800	Sisma Y SLV	0	12.7	0	0	1.4E2	0.527
10029	2800	Sisma X SLD	12.5	0	0	0	1.4E2	0.527	10030	2800	Sisma Y SLD	0	12.5	0	0	1.4E2	0.527
10031	2801	Sisma X SLV	14.3	0	0	0	1.6E2	0.527	10032	2801	Sisma Y SLV	0	14.3	0	0	1.6E2	0.527
10033	2801	Sisma X SLD	14	0	0	0	1.6E2	0.527	10034	2801	Sisma Y SLD	0	14	0	0	1.6E2	0.527
10035	2802	Sisma X SLV	14.7	0	0	0	1.6E2	0.527	10036	2802	Sisma Y SLV	0	14.7	0	0	1.6E2	0.527
10037	2802	Sisma X SLD	14.5	0	0	0	1.6E2	0.527	10038	2802	Sisma Y SLD	0	14.5	0	0	1.6E2	0.527
10039	2803	Sisma X SLV	27.3	0	0	0	3.0E2	0.527	10040	2803	Sisma Y SLV	0	27.3	0	0	3.0E2	0.527
10041	2803	Sisma X SLD	26.8	0	0	0	3.0E2	0.527	10042	2803	Sisma Y SLD	0	26.8	0	0	3.0E2	0.527
10043	2804	Sisma X SLV	13.1	0	0	0	145.75	0.528	10044	2804	Sisma Y SLV	0	13.1	0	0	145.75	0.528
10045	2804	Sisma X SLD	12.9	0	0	0	145.75	0.528	10046	2804	Sisma Y SLD	0	12.9	0	0	145.75	0.528
10047	2805	Sisma X SLV	13.1	0	0	0	145.75	0.528	10048	2805	Sisma Y SLV	0	13.1	0	0	145.75	0.528
10049	2805	Sisma X SLD	12.9	0	0	0	145.75	0.528	10050	2805	Sisma Y SLD	0	12.9	0	0	145.75	0.528
10051	2806	Sisma X SLV	28.4	0	0	0	3.2E2	0.528	10052	2806	Sisma Y SLV	0	28.4	0	0	3.2E2	0.528
10053	2806	Sisma X SLD	28	0	0	0	3.2E2	0.528	10054	2806	Sisma Y SLD	0	28	0	0	3.2E2	0.528
10055	2807	Sisma X SLV	13.5	0	0	0	1.5E2	0.528	10056	2807	Sisma Y SLV	0	13.5	0	0	1.5E2	0.528
10057	2807	Sisma X SLD	13.2	0	0	0	1.5E2	0.528	10058	2807	Sisma Y SLD	0	13.2	0	0	1.5E2	0.528
10059	2808	Sisma X SLV	8.3	0	0	0	92.208	0.528	10060	2808	Sisma Y SLV	0	8.3	0	0	92.208	0.528
10061	2808	Sisma X SLD	8.2	0	0	0	92.208	0.528	10062	2808	Sisma Y SLD	0	8.2	0	0	92.208	0.528
10063	2809	Sisma X SLV	24.8	0	0	0	2.8E2	0.528	10064	2809	Sisma Y SLV	0	24.8	0	0	2.8E2	0.528
10065	2809	Sisma X SLD	24.4	0	0	0	2.8E2	0.528	10066	2809	Sisma Y SLD	0	24.4	0	0	2.8E2	0.528
10067	2810	Sisma X SLV	27.1	0	0	0	3.0E2	0.528	10068	2810	Sisma Y SLV	0	27.1	0	0	3.0E2	0.528
10069	2810	Sisma X SLD	26.6	0	0	0	3.0E2	0.528	10070	2810	Sisma Y SLD	0	26.6	0	0	3.0E2	0.528
10071	2811	Sisma X SLV	25.6	0	0	0	2.8E2	0.528	10072	2811	Sisma Y SLV	0	25.6	0	0	2.8E2	0.528
10073	2811	Sisma X SLD	25.2	0	0	0	2.8E2	0.528	10074	2811	Sisma Y SLD	0	25.2	0	0	2.8E2	0.528
10075	2812	Sisma X SLV	7.5	0	0	0	83.462	0.529	10076	2812	Sisma Y SLV	0	7.5	0	0	83.462	0.529
10077	2812	Sisma X SLD	7.4	0	0	0	83.462	0.529	10078	2812	Sisma Y SLD	0	7.4	0	0	83.462	0.529
10079	2813	Sisma X SLV	14.1	0	0	0	1.6E2	0.529	10080	2813	Sisma Y SLV	0	14.1	0	0	1.6E2	0.529
10081	2813	Sisma X SLD	13.9	0	0	0	1.6E2	0.529	10082	2813	Sisma Y SLD	0	13.9	0	0	1.6E2	0.529
10083	2814	Sisma X SLV	13.1	0	0	0	1.4E2	0.529	10084	2814	Sisma Y SLV	0	13.1	0	0	1.4E2	0.529
10085	2814	Sisma X SLD	12.8	0	0	0	1.4E2	0.529	10086	2814	Sisma Y SLD	0	12.8	0	0	1.4E2	0.529
10087	2815	Sisma X SLV	13.1	0	0	0	1.4E2	0.529	10088	2815	Sisma Y SLV	0	13.1	0	0	1.4E2	0.529
10089	2815	Sisma X SLD	12.8	0	0	0	1.4E2	0.529	10090	2815	Sisma Y SLD	0	12.8	0	0	1.4E2	0.529
10091	2816	Sisma X SLV	30.5	0	0	0	3.4E2	0.53	10092	2816	Sisma Y SLV	0	30.5	0	0	3.4E2	0.53
10093	2816	Sisma X SLD	30	0	0	0	3.4E2	0.53	10094	2816	Sisma Y SLD	0	30	0	0	3.4E2	0.53
10095	2817	Sisma X SLV	24.7	0	0	0	2.7E2	0.53	10096	2817	Sisma Y SLV	0	24.7	0	0	2.7E2	0.53
10097	2817	Sisma X SLD	24.3	0	0	0	2.7E2	0.53	10098	2817	Sisma Y SLD	0	24.3	0	0	2.7E2	0.53
10099	2818	Sisma X SLV	10.9	0	0	0	1.2E2	0.531	10100	2818	Sisma Y SLV	0	10.9	0	0	1.2E2	0.531
10101	2818	Sisma X SLD	10.7	0	0	0	1.2E2	0.531	10102	2818	Sisma Y SLD	0	10.7	0	0	1.2E2	0.531
10103	2819	Sisma X SLV	28.1	0	0	0	3.1E2	0.531	10104	2819	Sisma Y SLV	0	28.1	0	0	3.1E2	0.531
10105	2819	Sisma X SLD	27.7	0	0	0	3.1E2	0.531	10106	2819	Sisma Y SLD	0	27.7	0	0	3.1E2	0.531
10107	2820	Sisma X SLV	13.4	0	0	0	1.5E2	0.531	10108	2820	Sisma Y SLV	0	13.4	0	0	1.5E2	0.531
10109	2820	Sisma X SLD	13.2	0	0	0	1.5E2	0.531	10110	2820	Sisma Y SLD	0	13.2	0	0	1.5E2	0.531
10111	2821	Sisma X SLV	26.4	0	0	0	2.9E2	0.531	10112	2821	Sisma Y SLV	0	26.4	0	0	2.9E2	0.531
10113	2821	Sisma X SLD	26	0	0	0	2.9E2	0.531	10114	2821	Sisma Y SLD	0	26	0	0	2.9E2	0.531
10115	2822	Sisma X SLV	13	0	0	0	1.4E2	0.532	10116	2822	Sisma Y SLV	0	13	0	0	1.4E2	0.532
10117	2822	Sisma X SLD	12.8	0	0	0	1.4E2	0.532	10118	2822	Sisma Y SLD	0	12.8	0	0	1.4E2	0.532
10119	2823	Sisma X SLV	13	0	0	0	1.4E2	0.532	10120	2823	Sisma Y SLV	0	13	0	0	1.4E2	0.532
10121	2823	Sisma X SLD	12.8	0	0	0	1.4E2	0.532	10122	2823	Sisma Y SLD	0	12.8	0	0	1.4E2	0.532
10123	2824	Sisma X SLV	14.5	0	0	0	1.6E2	0.532	10124	2824	Sisma Y SLV	0	14.5	0	0	1.6E2	0.532
10125	2824	Sisma X SLD	14.2	0	0	0	1.6E2	0.532	10126	2824	Sisma Y SLD	0	14.2	0	0	1.6E2	0.532
10127	2825	Sisma X SLV	26.6	0	0	0	2.9E2	0.532	10128	2825	Sisma Y SLV	0	26.6	0	0	2.9E2	0.532
10129	2825	Sisma X SLD	26.2	0	0	0	2.9E2	0.532	10130	2825	Sisma Y SLD	0	26.2	0	0	2.9E2	0.532
10131	2826	Sisma X SLV	14	0	0	0	1.5E2	0.532	10132	2826	Sisma Y SLV	0	14	0	0	1.5E2	0.532
10133	2826	Sisma X SLD	13.7	0	0	0	1.5E2	0.532	10134	2826	Sisma Y SLD	0	13.7	0	0	1.5E2	0.532
10135	2827	Sisma X SLV	10.2	0	0	0	1.1E2	0.533	10136	2827	Sisma Y SLV	0	10.2	0	0	1.1E2	0.533
10137	2827	Sisma X SLD	10	0	0	0	1.1E2	0.533	10138	2827	Sisma Y SLD	0	10	0	0	1.1E2	0.533
10139	2828	Sisma X SLV	24.5	0	0	0	2.7E2	0.533	10140	2828	Sisma Y SLV	0	24.5	0	0	2.7E2	0.533
10141	2828	Sisma X SLD	24.1	0	0	0	2.7E2	0.533	10142	2828	Sisma Y SLD	0	24.1	0	0	2.7E2	0.533
10143	2829	Sisma X SLV	9.2	0	0	0	101.57	0.533	10144	2829	Sisma Y SLV	0	9.2	0	0	101.57	0.533
10145	2829	Sisma X SLD	9.1	0	0	0	101.57	0.533	10146	2829	Sisma Y SLD	0	9.1	0	0	101.57	0.533
10147	2830	Sisma X SLV	30.3	0	0	0	3.3E2	0.533	10148	2830	Sisma Y SLV	0	30.3	0	0	3.3E2	0.533
10149	2830	Sisma X SLD	29.8	0	0	0	3.3E2	0.533	10150	2830	Sisma Y SLD	0	29.8	0	0	3.3E2	0.533
10151	2831	Sisma X SLV	9	0	0	0	99.134	0.534	10152	2831	Sisma Y SLV	0	9	0	0	99.134	0.534

muratura

Indice	Nodo	Condizione	Fx	Fy	Fz	Mz	Peso	Gamma	Indice	Nodo	Condizione	Fx	Fy	Fz	Mz	Peso	Gamma
10153	2831	Sisma X SLD	8.9	0	0	0	99.134	0.534	10154	2831	Sisma Y SLD	0	8.9	0	0	99.134	0.534
10155	2832	Sisma X SLV	27.8	0	0	0	3.1E2	0.534	10156	2832	Sisma Y SLV	0	27.8	0	0	3.1E2	0.534
10157	2832	Sisma X SLD	27.4	0	0	0	3.1E2	0.534	10158	2832	Sisma Y SLD	0	27.4	0	0	3.1E2	0.534
10159	2833	Sisma X SLV	30.9	0	0	0	3.4E2	0.534	10160	2833	Sisma Y SLV	0	30.9	0	0	3.4E2	0.534
10161	2833	Sisma X SLD	30.4	0	0	0	3.4E2	0.534	10162	2833	Sisma Y SLD	0	30.4	0	0	3.4E2	0.534
10163	2834	Sisma X SLV	29.6	0	0	0	3.2E2	0.534	10164	2834	Sisma Y SLV	0	29.6	0	0	3.2E2	0.534
10165	2834	Sisma X SLD	29.1	0	0	0	3.2E2	0.534	10166	2834	Sisma Y SLD	0	29.1	0	0	3.2E2	0.534
10167	2835	Sisma X SLV	23.8	0	0	0	2.6E2	0.534	10168	2835	Sisma Y SLV	0	23.8	0	0	2.6E2	0.534
10169	2835	Sisma X SLD	23.5	0	0	0	2.6E2	0.534	10170	2835	Sisma Y SLD	0	23.5	0	0	2.6E2	0.534
10171	2836	Sisma X SLV	17.3	0	0	0	1.9E2	0.534	10172	2836	Sisma Y SLV	0	17.3	0	0	1.9E2	0.534
10173	2836	Sisma X SLD	17	0	0	0	1.9E2	0.534	10174	2836	Sisma Y SLD	0	17	0	0	1.9E2	0.534
10175	2837	Sisma X SLV	27.8	0	0	0	304.59	0.535	10176	2837	Sisma Y SLV	0	27.8	0	0	304.59	0.535
10177	2837	Sisma X SLD	27.3	0	0	0	304.59	0.535	10178	2837	Sisma Y SLD	0	27.3	0	0	304.59	0.535
10179	2838	Sisma X SLV	13.2	0	0	0	1.4E2	0.535	10180	2838	Sisma Y SLV	0	13.2	0	0	1.4E2	0.535
10181	2838	Sisma X SLD	13	0	0	0	1.4E2	0.535	10182	2838	Sisma Y SLD	0	13	0	0	1.4E2	0.535
10183	2839	Sisma X SLV	12.8	0	0	0	1.4E2	0.535	10184	2839	Sisma Y SLV	0	12.8	0	0	1.4E2	0.535
10185	2839	Sisma X SLD	12.6	0	0	0	1.4E2	0.535	10186	2839	Sisma Y SLD	0	12.6	0	0	1.4E2	0.535
10187	2840	Sisma X SLV	12.8	0	0	0	1.4E2	0.535	10188	2840	Sisma Y SLV	0	12.8	0	0	1.4E2	0.535
10189	2840	Sisma X SLD	12.6	0	0	0	1.4E2	0.535	10190	2840	Sisma Y SLD	0	12.6	0	0	1.4E2	0.535
10191	2841	Sisma X SLV	25	0	0	0	2.7E2	0.535	10192	2841	Sisma Y SLV	0	25	0	0	2.7E2	0.535
10193	2841	Sisma X SLD	24.6	0	0	0	2.7E2	0.535	10194	2841	Sisma Y SLD	0	24.6	0	0	2.7E2	0.535
10195	2842	Sisma X SLV	25.6	0	0	0	2.8E2	0.535	10196	2842	Sisma Y SLV	0	25.6	0	0	2.8E2	0.535
10197	2842	Sisma X SLD	25.2	0	0	0	2.8E2	0.535	10198	2842	Sisma Y SLD	0	25.2	0	0	2.8E2	0.535
10199	2843	Sisma X SLV	8.5	0	0	0	93.308	0.535	10200	2843	Sisma Y SLV	0	8.5	0	0	93.308	0.535
10201	2843	Sisma X SLD	8.4	0	0	0	93.308	0.535	10202	2843	Sisma Y SLD	0	8.4	0	0	93.308	0.535
10203	2844	Sisma X SLV	13.7	0	0	0	1.5E2	0.535	10204	2844	Sisma Y SLV	0	13.7	0	0	1.5E2	0.535
10205	2844	Sisma X SLD	13.5	0	0	0	1.5E2	0.535	10206	2844	Sisma Y SLD	0	13.5	0	0	1.5E2	0.535
10207	2845	Sisma X SLV	9.7	0	0	0	1.1E2	0.536	10208	2845	Sisma Y SLV	0	9.7	0	0	1.1E2	0.536
10209	2845	Sisma X SLD	9.6	0	0	0	1.1E2	0.536	10210	2845	Sisma Y SLD	0	9.6	0	0	1.1E2	0.536
10211	2846	Sisma X SLV	5.2	0	0	0	56.611	0.536	10212	2846	Sisma Y SLV	0	5.2	0	0	56.611	0.536
10213	2846	Sisma X SLD	5.1	0	0	0	56.611	0.536	10214	2846	Sisma Y SLD	0	5.1	0	0	56.611	0.536
10215	2847	Sisma X SLV	24.3	0	0	0	2.7E2	0.536	10216	2847	Sisma Y SLV	0	24.3	0	0	2.7E2	0.536
10217	2847	Sisma X SLD	23.9	0	0	0	2.7E2	0.536	10218	2847	Sisma Y SLD	0	23.9	0	0	2.7E2	0.536
10219	2848	Sisma X SLV	14.1	0	0	0	1.5E2	0.537	10220	2848	Sisma Y SLV	0	14.1	0	0	1.5E2	0.537
10221	2848	Sisma X SLD	13.9	0	0	0	1.5E2	0.537	10222	2848	Sisma Y SLD	0	13.9	0	0	1.5E2	0.537
10223	2849	Sisma X SLV	25.8	0	0	0	281.91	0.537	10224	2849	Sisma Y SLV	0	25.8	0	0	281.91	0.537
10225	2849	Sisma X SLD	25.4	0	0	0	281.91	0.537	10226	2849	Sisma Y SLD	0	25.4	0	0	281.91	0.537
10227	2850	Sisma X SLV	29.9	0	0	0	3.3E2	0.538	10228	2850	Sisma Y SLV	0	29.9	0	0	3.3E2	0.538
10229	2850	Sisma X SLD	29.4	0	0	0	3.3E2	0.538	10230	2850	Sisma Y SLD	0	29.4	0	0	3.3E2	0.538
10231	2851	Sisma X SLV	11.8	0	0	0	1.3E2	0.538	10232	2851	Sisma Y SLV	0	11.8	0	0	1.3E2	0.538
10233	2851	Sisma X SLD	11.6	0	0	0	1.3E2	0.538	10234	2851	Sisma Y SLD	0	11.6	0	0	1.3E2	0.538
10235	2852	Sisma X SLV	11.8	0	0	0	1.3E2	0.538	10236	2852	Sisma Y SLV	0	11.8	0	0	1.3E2	0.538
10237	2852	Sisma X SLD	11.6	0	0	0	1.3E2	0.538	10238	2852	Sisma Y SLD	0	11.6	0	0	1.3E2	0.538
10239	2853	Sisma X SLV	12.6	0	0	0	1.4E2	0.538	10240	2853	Sisma Y SLV	0	12.6	0	0	1.4E2	0.538
10241	2853	Sisma X SLD	12.4	0	0	0	1.4E2	0.538	10242	2853	Sisma Y SLD	0	12.4	0	0	1.4E2	0.538
10243	2854	Sisma X SLV	12.6	0	0	0	1.4E2	0.538	10244	2854	Sisma Y SLV	0	12.6	0	0	1.4E2	0.538
10245	2854	Sisma X SLD	12.4	0	0	0	1.4E2	0.538	10246	2854	Sisma Y SLD	0	12.4	0	0	1.4E2	0.538
10247	2855	Sisma X SLV	27.2	0	0	0	3.0E2	0.539	10248	2855	Sisma Y SLV	0	27.2	0	0	3.0E2	0.539
10249	2855	Sisma X SLD	26.8	0	0	0	3.0E2	0.539	10250	2855	Sisma Y SLD	0	26.8	0	0	3.0E2	0.539
10251	2856	Sisma X SLV	13	0	0	0	1.4E2	0.539	10252	2856	Sisma Y SLV	0	13	0	0	1.4E2	0.539
10253	2856	Sisma X SLD	12.8	0	0	0	1.4E2	0.539	10254	2856	Sisma Y SLD	0	12.8	0	0	1.4E2	0.539
10255	2857	Sisma X SLV	10.5	0	0	0	1.1E2	0.539	10256	2857	Sisma Y SLV	0	10.5	0	0	1.1E2	0.539
10257	2857	Sisma X SLD	10.3	0	0	0	1.1E2	0.539	10258	2857	Sisma Y SLD	0	10.3	0	0	1.1E2	0.539
10259	2858	Sisma X SLV	14.1	0	0	0	1.5E2	0.539	10260	2858	Sisma Y SLV	0	14.1	0	0	1.5E2	0.539
10261	2858	Sisma X SLD	13.9	0	0	0	1.5E2	0.539	10262	2858	Sisma Y SLD	0	13.9	0	0	1.5E2	0.539
10263	2859	Sisma X SLV	24.5	0	0	0	2.7E2	0.539	10264	2859	Sisma Y SLV	0	24.5	0	0	2.7E2	0.539
10265	2859	Sisma X SLD	24.1	0	0	0	2.7E2	0.539	10266	2859	Sisma Y SLD	0	24.1	0	0	2.7E2	0.539
10267	2860	Sisma X SLV	13.3	0	0	0	1.4E2	0.539	10268	2860	Sisma Y SLV	0	13.3	0	0	1.4E2	0.539
10269	2860	Sisma X SLD	13.1	0	0	0	1.4E2	0.539	10270	2860	Sisma Y SLD	0	13.1	0	0	1.4E2	0.539
10271	2861	Sisma X SLV	23.9	0	0	0	2.6E2	0.54	10272	2861	Sisma Y SLV	0	23.9	0	0	2.6E2	0.54
10273	2861	Sisma X SLD	23.5	0	0	0	2.6E2	0.54	10274	2861	Sisma Y SLD	0	23.5	0	0	2.6E2	0.54
10275	2862	Sisma X SLV	24.3	0	0	0	2.6E2	0.541	10276	2862	Sisma Y SLV	0	24.3	0	0	2.6E2	0.541
10277	2862	Sisma X SLD	23.9	0	0	0	2.6E2	0.541	10278	2862	Sisma Y SLD	0	23.9	0	0	2.6E2	0.541
10279	2863	Sisma X SLV	14.4	0	0	0	1.6E2	0.541	10280	2863	Sisma Y SLV	0	14.4	0	0	1.6E2	0.541
10281	2863	Sisma X SLD	14.2	0	0	0	1.6E2	0.541	10282	2863	Sisma Y SLD	0	14.2	0	0	1.6E2	0.541
10283	2864	Sisma X SLV	13.6	0	0	0	146.67	0.542	10284	2864	Sisma Y SLV	0	13.6	0	0	146.67	0.542
10285	2864	Sisma X SLD	13.4	0	0	0	146.67	0.542	10286	2864	Sisma Y SLD	0	13.4	0	0	146.67	0.542
10287	2865	Sisma X SLV	24.9	0	0	0	2.7E2	0.542	10288	2865	Sisma Y SLV	0	24.9	0	0	2.7E2	0.542
10289	2865	Sisma X SLD	24.5	0	0	0	2.7E2	0.542	10290	2865	Sisma Y SLD	0	24.5	0	0	2.7E2	0.542
10291	2866	Sisma X SLV	12.2	0	0	0	1.3E2	0.542	10292	2866	Sisma Y SLV	0	12.2	0	0	1.3E2	0.542
10293	2866	Sisma X SLD	12	0	0	0	1.3E2	0.542	10294	2866	Sisma Y SLD	0	12	0	0	1.3E2	0.542
10295	2867	Sisma X SLV	12.2	0	0	0	1.3E2	0.542	10296	2867	Sisma Y SLV	0	12.2	0	0	1.3E2	0.542
10297	2867	Sisma X SLD	12	0	0	0	1.3E2	0.542	10298	2867	Sisma Y SLD	0	12	0	0	1.3E2	0.542
10299	2868	Sisma X SLV	25.6	0	0	0	2.8E2	0.543	10300	2868	Sisma Y SLV	0	25.6	0	0	2.8E2	0.543
10301	2868	Sisma X SLD	25.2	0	0	0	2.8E2	0.543	10302	2868	Sisma Y SLD	0	25.2	0	0	2.8E2	0.543
10303	2869	Sisma X SLV	28.3	0	0	0	3.1E2	0.543	10304	2869	Sisma Y SLV	0	28.3	0	0	3.1E2	0.543
10305	2869	Sisma X SLD	27.9	0	0	0	3.1E2	0.543	10306	2869	Sisma Y SLD	0	27.9	0	0	3.1E2	0.543
10307	2870	Sisma X SLV	26.9	0	0	0	290.23	0.543	10308	2870	Sisma Y SLV	0	26.9	0	0	290.23	0.543
10309	2870	Sisma X SLD	26.4	0	0	0	290.23	0.543	10310	2870	Sisma Y SLD	0	26.4	0	0	290.23	0.543
10311	2871	Sisma X SLV	29	0	0	0	3.1E2	0.543	10312	2871	Sisma Y SLV	0	29	0	0	3.1E2	0.543
10313	2871	Sisma X SLD	28.6	0	0	0	3.1E2	0.543	10314	2871	Sisma Y SLD	0	28.6	0	0	3.1E2	0.543
10315	2872	Sisma X SLV	22.6	0	0	0	2.4E2	0.543	10316	2872	Sisma Y SLV	0	22.6	0	0	2.4E2	0.543
10317	2872	Sisma X SLD	22.2	0	0	0	2.4E2	0.543	10318	2872	Sisma Y SLD	0	22.2	0	0	2.4E2	0.543
10319	2873	Sisma X SLV	26.4	0	0	0	2.8E2	0.543	10320	2873	Sisma Y SLV	0	26.4	0	0	2.8E2	0.543
10321	2873	Sisma X SLD	25.9	0	0	0	2.8E2	0.543	10322	2873	Sisma Y SLD	0	25.9	0	0	2.8E2	0.543
10323	2874	Sisma X SLV	12.7	0	0	0	1.4E2	0.543	10324	2874	Sisma Y SLV	0	12.7	0	0	1.4E2	0.543
10325	2874	Sisma X SLD	12.5	0	0	0	1.4E2	0.543	10326	2874	Sisma Y SLD	0	12.5	0	0	1.4E2	0.543
10327	2875	Sisma X SLV	23.4	0	0	0	2.5E2	0.544	10328	2875	Sisma Y SLV	0	23.4	0	0	2.5E2	0.544
10329	2875	Sisma X SLD	23	0	0	0	2.5E2	0.544	10330	2875	Sisma Y SLD	0	23	0	0	2.5E2	0.544
10331	2876	Sisma X SLV	12.6	0	0	0	1.4E2	0.544	10332	2876	Sisma Y SLV	0	12.6	0	0	1.4E2	0.544
10333	2876	Sisma X SLD	12.4	0	0	0	1.4E2	0.544	10334	2876	Sisma Y SLD	0	12.4	0	0	1.4E2	0.544
10335	2877	Sisma X SLV	23.2	0	0	0	2.5E2	0.544	10336	2877	Sisma Y SLV	0	23.2	0	0	2.5E2	0.544
10337	2877	Sisma X SLD	22.8	0	0	0	2.5E2	0.544	10338	2877	Sisma Y SLD	0	22.8	0	0	2.5E2	0.544
10339	2878	Sisma X SLV	4.6	0	0	0	49.301	0.545	10340	2878	Sisma Y SLV	0	4.6	0	0	49.301	0.545
10341	2878	Sisma X SLD	4.5	0	0	0	49.301	0.545	10342	2878	Sisma Y SLD	0	4.5	0	0	49.301	0.545
10343	2879	Sisma X SLV	11.6	0	0	0	1.3E2	0.545	10344	2879	Sisma Y SLV	0	11.6	0	0	1.3E2	0.545
10345	2879	Sisma X SLD	11.4	0	0	0	1.3E2	0.545	10346	2879	Sisma Y SLD	0	11.4	0	0	1.3E2	0.545
10347	2880	Sisma X SLV	11.6	0	0	0	1.3E2	0.545	10348	2880	Sisma Y SLV	0	11.6	0	0	1.3E2	0.545
10349	2880	Sisma X SLD	11.4	0	0	0	1.3E2	0.545	10350	2880	Sisma Y SLD	0	11.4	0	0	1.3E2	0.545
10351	2881	Sisma X SLV	10.4	0	0	0	1.1E2	0.545	10352	2881	Sisma Y SLV	0	10.4	0	0	1.1E2	0.545
10353	2881	Sisma X SLD	10.2	0	0	0	1.1E2	0.545	10354	2881	Sisma Y SLD	0	10.2	0	0	1.1E2	0.545

Indice	Nodo	Condizione	Fx	Fy	Fz	Mz	Peso	Gamma	Indice	Nodo	Condizione	Fx	Fy	Fz	Mz	Peso	Gamma
10355	2882	Sisma X SLV	11.8	0	0	0	1.3E2	0.546	10356	2882	Sisma Y SLV	0	11.8	0	0	1.3E2	0.546
10357	2882	Sisma X SLD	11.6	0	0	0	1.3E2	0.546	10358	2882	Sisma Y SLD	0	11.6	0	0	1.3E2	0.546
10359	2883	Sisma X SLV	11.8	0	0	0	1.3E2	0.546	10360	2883	Sisma Y SLV	0	11.8	0	0	1.3E2	0.546
10361	2883	Sisma X SLD	11.6	0	0	0	1.3E2	0.546	10362	2883	Sisma Y SLD	0	11.6	0	0	1.3E2	0.546
10363	2884	Sisma X SLV	23.6	0	0	0	253.02	0.546	10364	2884	Sisma Y SLV	0	23.6	0	0	253.02	0.546
10365	2884	Sisma X SLD	23.2	0	0	0	253.02	0.546	10366	2884	Sisma Y SLD	0	23.2	0	0	253.02	0.546
10367	2885	Sisma X SLV	15	0	0	0	1.6E2	0.546	10368	2885	Sisma Y SLV	0	15	0	0	1.6E2	0.546
10369	2885	Sisma X SLD	14.7	0	0	0	1.6E2	0.546	10370	2885	Sisma Y SLD	0	14.7	0	0	1.6E2	0.546
10371	2886	Sisma X SLV	11.7	0	0	0	1.2E2	0.547	10372	2886	Sisma Y SLV	0	11.7	0	0	1.2E2	0.547
10373	2886	Sisma X SLD	11.5	0	0	0	1.2E2	0.547	10374	2886	Sisma Y SLD	0	11.5	0	0	1.2E2	0.547
10375	2887	Sisma X SLV	11.7	0	0	0	1.2E2	0.547	10376	2887	Sisma Y SLV	0	11.7	0	0	1.2E2	0.547
10377	2887	Sisma X SLD	11.5	0	0	0	1.2E2	0.547	10378	2887	Sisma Y SLD	0	11.5	0	0	1.2E2	0.547
10379	2888	Sisma X SLV	27.5	0	0	0	294.81	0.547	10380	2888	Sisma Y SLV	0	27.5	0	0	294.81	0.547
10381	2888	Sisma X SLD	27.1	0	0	0	294.81	0.547	10382	2888	Sisma Y SLD	0	27.1	0	0	294.81	0.547
10383	2889	Sisma X SLV	24.2	0	0	0	2.6E2	0.547	10384	2889	Sisma Y SLV	0	24.2	0	0	2.6E2	0.547
10385	2889	Sisma X SLD	23.8	0	0	0	2.6E2	0.547	10386	2889	Sisma Y SLD	0	23.8	0	0	2.6E2	0.547
10387	2890	Sisma X SLV	26.8	0	0	0	2.9E2	0.547	10388	2890	Sisma Y SLV	0	26.8	0	0	2.9E2	0.547
10389	2890	Sisma X SLD	26.3	0	0	0	2.9E2	0.547	10390	2890	Sisma Y SLD	0	26.3	0	0	2.9E2	0.547
10391	2891	Sisma X SLV	25.2	0	0	0	2.7E2	0.547	10392	2891	Sisma Y SLV	0	25.2	0	0	2.7E2	0.547
10393	2891	Sisma X SLD	24.8	0	0	0	2.7E2	0.547	10394	2891	Sisma Y SLD	0	24.8	0	0	2.7E2	0.547
10395	2892	Sisma X SLV	12.9	0	0	0	1.4E2	0.547	10396	2892	Sisma Y SLV	0	12.9	0	0	1.4E2	0.547
10397	2892	Sisma X SLD	12.7	0	0	0	1.4E2	0.547	10398	2892	Sisma Y SLD	0	12.7	0	0	1.4E2	0.547
10399	2893	Sisma X SLV	25.3	0	0	0	2.7E2	0.547	10400	2893	Sisma Y SLV	0	25.3	0	0	2.7E2	0.547
10401	2893	Sisma X SLD	24.9	0	0	0	2.7E2	0.547	10402	2893	Sisma Y SLD	0	24.9	0	0	2.7E2	0.547
10403	2894	Sisma X SLV	23.7	0	0	0	2.5E2	0.547	10404	2894	Sisma Y SLV	0	23.7	0	0	2.5E2	0.547
10405	2894	Sisma X SLD	23.3	0	0	0	2.5E2	0.547	10406	2894	Sisma Y SLD	0	23.3	0	0	2.5E2	0.547
10407	2895	Sisma X SLV	22.3	0	0	0	238.2	0.547	10408	2895	Sisma Y SLV	0	22.3	0	0	238.2	0.547
10409	2895	Sisma X SLD	21.9	0	0	0	238.2	0.547	10410	2895	Sisma Y SLD	0	21.9	0	0	238.2	0.547
10411	2896	Sisma X SLV	22.5	0	0	0	2.4E2	0.548	10412	2896	Sisma Y SLV	0	22.5	0	0	2.4E2	0.548
10413	2896	Sisma X SLD	22.1	0	0	0	2.4E2	0.548	10414	2896	Sisma Y SLD	0	22.1	0	0	2.4E2	0.548
10415	2897	Sisma X SLV	11.7	0	0	0	1.3E2	0.548	10416	2897	Sisma Y SLV	0	11.7	0	0	1.3E2	0.548
10417	2897	Sisma X SLD	11.5	0	0	0	1.3E2	0.548	10418	2897	Sisma Y SLD	0	11.5	0	0	1.3E2	0.548
10419	2898	Sisma X SLV	12.3	0	0	0	1.3E2	0.548	10420	2898	Sisma Y SLV	0	12.3	0	0	1.3E2	0.548
10421	2898	Sisma X SLD	12.1	0	0	0	1.3E2	0.548	10422	2898	Sisma Y SLD	0	12.1	0	0	1.3E2	0.548
10423	2899	Sisma X SLV	22.6	0	0	0	2.4E2	0.548	10424	2899	Sisma Y SLV	0	22.6	0	0	2.4E2	0.548
10425	2899	Sisma X SLD	22.2	0	0	0	2.4E2	0.548	10426	2899	Sisma Y SLD	0	22.2	0	0	2.4E2	0.548
10427	2900	Sisma X SLV	23.6	0	0	0	2.5E2	0.548	10428	2900	Sisma Y SLV	0	23.6	0	0	2.5E2	0.548
10429	2900	Sisma X SLD	23.2	0	0	0	2.5E2	0.548	10430	2900	Sisma Y SLD	0	23.2	0	0	2.5E2	0.548
10431	2901	Sisma X SLV	26.6	0	0	0	2.8E2	0.549	10432	2901	Sisma Y SLV	0	26.6	0	0	2.8E2	0.549
10433	2901	Sisma X SLD	26.1	0	0	0	2.8E2	0.549	10434	2901	Sisma Y SLD	0	26.1	0	0	2.8E2	0.549
10435	2902	Sisma X SLV	24.8	0	0	0	2.6E2	0.549	10436	2902	Sisma Y SLV	0	24.8	0	0	2.6E2	0.549
10437	2902	Sisma X SLD	24.4	0	0	0	2.6E2	0.549	10438	2902	Sisma Y SLD	0	24.4	0	0	2.6E2	0.549
10439	2903	Sisma X SLV	10.4	0	0	0	1.1E2	0.549	10440	2903	Sisma Y SLV	0	10.4	0	0	1.1E2	0.549
10441	2903	Sisma X SLD	10.3	0	0	0	1.1E2	0.549	10442	2903	Sisma Y SLD	0	10.3	0	0	1.1E2	0.549
10443	2904	Sisma X SLV	22.3	0	0	0	2.4E2	0.549	10444	2904	Sisma Y SLV	0	22.3	0	0	2.4E2	0.549
10445	2904	Sisma X SLD	21.9	0	0	0	2.4E2	0.549	10446	2904	Sisma Y SLD	0	21.9	0	0	2.4E2	0.549
10447	2905	Sisma X SLV	10.8	0	0	0	1.2E2	0.549	10448	2905	Sisma Y SLV	0	10.8	0	0	1.2E2	0.549
10449	2905	Sisma X SLD	10.7	0	0	0	1.2E2	0.549	10450	2905	Sisma Y SLD	0	10.7	0	0	1.2E2	0.549
10451	2906	Sisma X SLV	12.4	0	0	0	1.3E2	0.55	10452	2906	Sisma Y SLV	0	12.4	0	0	1.3E2	0.55
10453	2906	Sisma X SLD	12.3	0	0	0	1.3E2	0.55	10454	2906	Sisma Y SLD	0	12.3	0	0	1.3E2	0.55
10455	2907	Sisma X SLV	22.9	0	0	0	2.4E2	0.55	10456	2907	Sisma Y SLV	0	22.9	0	0	2.4E2	0.55
10457	2907	Sisma X SLD	22.5	0	0	0	2.4E2	0.55	10458	2907	Sisma Y SLD	0	22.5	0	0	2.4E2	0.55
10459	2908	Sisma X SLV	12.3	0	0	0	1.3E2	0.55	10460	2908	Sisma Y SLV	0	12.3	0	0	1.3E2	0.55
10461	2908	Sisma X SLD	12.1	0	0	0	1.3E2	0.55	10462	2908	Sisma Y SLD	0	12.1	0	0	1.3E2	0.55
10463	2909	Sisma X SLV	22.6	0	0	0	2.4E2	0.55	10464	2909	Sisma Y SLV	0	22.6	0	0	2.4E2	0.55
10465	2909	Sisma X SLD	22.2	0	0	0	2.4E2	0.55	10466	2909	Sisma Y SLD	0	22.2	0	0	2.4E2	0.55
10467	2910	Sisma X SLV	10.6	0	0	0	1.1E2	0.55	10468	2910	Sisma Y SLV	0	10.6	0	0	1.1E2	0.55
10469	2910	Sisma X SLD	10.4	0	0	0	1.1E2	0.55	10470	2910	Sisma Y SLD	0	10.4	0	0	1.1E2	0.55
10471	2911	Sisma X SLV	5.7	0	0	0	60.382	0.554	10472	2911	Sisma Y SLV	0	5.7	0	0	60.382	0.554
10473	2911	Sisma X SLD	5.6	0	0	0	60.382	0.554	10474	2911	Sisma Y SLD	0	5.6	0	0	60.382	0.554
10475	2912	Sisma X SLV	11.2	0	0	0	1.2E2	0.558	10476	2912	Sisma Y SLV	0	11.2	0	0	1.2E2	0.558
10477	2912	Sisma X SLD	11.1	0	0	0	1.2E2	0.558	10478	2912	Sisma Y SLD	0	11.1	0	0	1.2E2	0.558
10479	2913	Sisma X SLV	6	0	0	0	62.465	0.56	10480	2913	Sisma Y SLV	0	6	0	0	62.465	0.56
10481	2913	Sisma X SLD	5.9	0	0	0	62.465	0.56	10482	2913	Sisma Y SLD	0	5.9	0	0	62.465	0.56
10483	2914	Sisma X SLV	16	0	0	0	1.7E2	0.563	10484	2914	Sisma Y SLV	0	16	0	0	1.7E2	0.563
10485	2914	Sisma X SLD	15.8	0	0	0	1.7E2	0.563	10486	2914	Sisma Y SLD	0	15.8	0	0	1.7E2	0.563
10487	2915	Sisma X SLV	12.2	0	0	0	1.3E2	0.563	10488	2915	Sisma Y SLV	0	12.2	0	0	1.3E2	0.563
10489	2915	Sisma X SLD	12	0	0	0	1.3E2	0.563	10490	2915	Sisma Y SLD	0	12	0	0	1.3E2	0.563
10491	2916	Sisma X SLV	14.2	0	0	0	1.5E2	0.565	10492	2916	Sisma Y SLV	0	14.2	0	0	1.5E2	0.565
10493	2916	Sisma X SLD	14	0	0	0	1.5E2	0.565	10494	2916	Sisma Y SLD	0	14	0	0	1.5E2	0.565
10495	2917	Sisma X SLV	6	0	0	0	62.561	0.566	10496	2917	Sisma Y SLV	0	6	0	0	62.561	0.566
10497	2917	Sisma X SLD	5.9	0	0	0	62.561	0.566	10498	2917	Sisma Y SLD	0	5.9	0	0	62.561	0.566
10499	2918	Sisma X SLV	27.6	0	0	0	2.8E2	0.57	10500	2918	Sisma Y SLV	0	27.6	0	0	2.8E2	0.57
10501	2918	Sisma X SLD	27.1	0	0	0	2.8E2	0.57	10502	2918	Sisma Y SLD	0	27.1	0	0	2.8E2	0.57
10503	2919	Sisma X SLV	12.5	0	0	0	1.3E2	0.575	10504	2919	Sisma Y SLV	0	12.5	0	0	1.3E2	0.575
10505	2919	Sisma X SLD	12.3	0	0	0	1.3E2	0.575	10506	2919	Sisma Y SLD	0	12.3	0	0	1.3E2	0.575
10507	2920	Sisma X SLV	15.9	0	0	0	1.6E2	0.577	10508	2920	Sisma Y SLV	0	15.9	0	0	1.6E2	0.577
10509	2920	Sisma X SLD	15.7	0	0	0	1.6E2	0.577	10510	2920	Sisma Y SLD	0	15.7	0	0	1.6E2	0.577
10511	2921	Sisma X SLV	12.1	0	0	0	122.7	0.579	10512	2921	Sisma Y SLV	0	12.1	0	0	122.7	0.579
10513	2921	Sisma X SLD	11.9	0	0	0	122.7	0.579	10514	2921	Sisma Y SLD	0	11.9	0	0	122.7	0.579
10515	2922	Sisma X SLV	9.2	0	0	0	93.051	0.579	10516	2922	Sisma Y SLV	0	9.2	0	0	93.051	0.579
10517	2922	Sisma X SLD	9.1	0	0	0	93.051	0.579	10518	2922	Sisma Y SLD	0	9.1	0	0	93.051	0.579
10519	2923	Sisma X SLV	11.1	0	0	0	1.1E2	0.581	10520	2923	Sisma Y SLV	0	11.1	0	0	1.1E2	0.581
10521	2923	Sisma X SLD	11	0	0	0	1.1E2	0.581	10522	2923	Sisma Y SLD	0	11	0	0	1.1E2	0.581
10523	2924	Sisma X SLV	19.1	0	0	0	1.9E2	0.581	10524	2924	Sisma Y SLV	0	19.1	0	0	1.9E2	0.581
10525	2924	Sisma X SLD	18.8	0	0	0	1.9E2	0.581	10526	2924	Sisma Y SLD	0	18.8	0	0	1.9E2	0.581
10527	2925	Sisma X SLV	10.5	0	0	0	1.1E2	0.583	10528	2925	Sisma Y SLV	0	10.5	0	0	1.1E2	0.583
10529	2925	Sisma X SLD	10.3	0	0	0	1.1E2	0.583	10530	2925	Sisma Y SLD	0	10.3	0	0	1.1E2	0.583
10531	2926	Sisma X SLV	9.4	0	0	0	94.629	0.583	10532	2926	Sisma Y SLV	0	9.4	0	0	94.629	0.583
10533	2926	Sisma X SLD	9.3	0	0	0	94.629	0.583	10534	2926	Sisma Y SLD	0	9.3	0	0	94.629	0.583
10535	2927	Sisma X SLV	35	0	0	0	3.5E2	0.583	10536	2927	Sisma Y SLV	0	35	0	0	3.5E2	0.583
10537	2927	Sisma X SLD	34.4	0	0	0	3.5E2	0.583	10538	2927	Sisma Y SLD	0	34.4	0	0	3.5E2	0.583
10539	2928	Sisma X SLV	37.4	0	0	0	3.8E2	0.583	10540	2928	Sisma Y SLV	0	37.4	0	0	3.8E2	0.583
10541	2928	Sisma X SLD	36.9	0	0	0	3.8E2	0.583	10542	2928	Sisma Y SLD	0	36.9	0	0	3.8E2	0.583
10543	2929	Sisma X SLV	37.4	0	0	0	3.8E2	0.583	10544	2929	Sisma Y SLV	0	37.4	0	0	3.8E2	0.583
10545	2929	Sisma X SLD	36.8	0	0	0	3.8E2	0.583	10546	2929	Sisma Y SLD	0	36.8	0	0	3.8E2	0.583
10547	2930	Sisma X SLV	30.6	0	0	0	307.57	0.583	10548	2930	Sisma Y SLV	0	30.6	0	0	307.57	0.583
10549	2930	Sisma X SLD	30.1	0	0	0	307.57	0.583	10550	2930	Sisma Y SLD	0	30.1	0	0	307.57	0.583
10551	2931	Sisma X SLV	30	0	0	0	3.0E2	0.583	10552	2931	Sisma Y SLV	0	30	0	0	3.0E2	0.583
10553	2931	Sisma X SLD	29.6	0	0	0	3.0E2	0.583	10554	2931	Sisma Y SLD	0	29.6	0	0	3.0E2	0.583
10555	2932	Sisma X SLV	30.1	0	0	0	3.0E2	0.583	10556	2932	Sisma Y SLV	0	30.1	0	0	3.0E2	0.583
10557	2932	Sisma X SLD	29.6	0	0	0	3.0E2	0.583	10558	2932	Sisma Y SLD	0	29.6	0	0	3.0E2	0.583
10559	2933	Sisma X SLV	10	0	0	0	99.991	0.584	10560	2933	Sisma Y SLV	0	10	0	0	99.991	0.584
10561	2933	Sisma X SLD	9.8	0	0	0	99.991	0.584	10562	2933	Sisma Y SLD	0	9.8	0	0	99.991	0.584

muratura

Indice	Nodo	Condizione	Fx	Fy	Fz	Mz	Peso	Gamma	Indice	Nodo	Condizione	Fx	Fy	Fz	Mz	Peso	Gamma
10563	2934	Sisma X SLV	30.7	0	0	0	3.1E2	0.584	10564	2934	Sisma Y SLV	0	30.7	0	0	3.1E2	0.584
10565	2934	Sisma X SLD	30.2	0	0	0	3.1E2	0.584	10566	2934	Sisma Y SLD	0	30.2	0	0	3.1E2	0.584
10567	2935	Sisma X SLV	28.9	0	0	0	2.9E2	0.584	10568	2935	Sisma Y SLV	0	28.9	0	0	2.9E2	0.584
10569	2935	Sisma X SLD	28.4	0	0	0	2.9E2	0.584	10570	2935	Sisma Y SLD	0	28.4	0	0	2.9E2	0.584
10571	2936	Sisma X SLV	28.9	0	0	0	2.9E2	0.584	10572	2936	Sisma Y SLV	0	28.9	0	0	2.9E2	0.584
10573	2936	Sisma X SLD	28.4	0	0	0	2.9E2	0.584	10574	2936	Sisma Y SLD	0	28.4	0	0	2.9E2	0.584
10575	2937	Sisma X SLV	30.5	0	0	0	3.1E2	0.584	10576	2937	Sisma Y SLV	0	30.5	0	0	3.1E2	0.584
10577	2937	Sisma X SLD	30	0	0	0	3.1E2	0.584	10578	2937	Sisma Y SLD	0	30	0	0	3.1E2	0.584
10579	2938	Sisma X SLV	31.4	0	0	0	3.1E2	0.584	10580	2938	Sisma Y SLV	0	31.4	0	0	3.1E2	0.584
10581	2938	Sisma X SLD	30.9	0	0	0	3.1E2	0.584	10582	2938	Sisma Y SLD	0	30.9	0	0	3.1E2	0.584
10583	2939	Sisma X SLV	31.7	0	0	0	3.2E2	0.584	10584	2939	Sisma Y SLV	0	31.7	0	0	3.2E2	0.584
10585	2939	Sisma X SLD	31.2	0	0	0	3.2E2	0.584	10586	2939	Sisma Y SLD	0	31.2	0	0	3.2E2	0.584
10587	2940	Sisma X SLV	32.3	0	0	0	3.2E2	0.584	10588	2940	Sisma Y SLV	0	32.3	0	0	3.2E2	0.584
10589	2940	Sisma X SLD	31.7	0	0	0	3.2E2	0.584	10590	2940	Sisma Y SLD	0	31.7	0	0	3.2E2	0.584
10591	2941	Sisma X SLV	28.9	0	0	0	2.9E2	0.585	10592	2941	Sisma Y SLV	0	28.9	0	0	2.9E2	0.585
10593	2941	Sisma X SLD	28.4	0	0	0	2.9E2	0.585	10594	2941	Sisma Y SLD	0	28.4	0	0	2.9E2	0.585
10595	2942	Sisma X SLV	28.7	0	0	0	2.9E2	0.585	10596	2942	Sisma Y SLV	0	28.7	0	0	2.9E2	0.585
10597	2942	Sisma X SLD	28.3	0	0	0	2.9E2	0.585	10598	2942	Sisma Y SLD	0	28.3	0	0	2.9E2	0.585
10599	2943	Sisma X SLV	30.4	0	0	0	3.0E2	0.585	10600	2943	Sisma Y SLV	0	30.4	0	0	3.0E2	0.585
10601	2943	Sisma X SLD	29.9	0	0	0	3.0E2	0.585	10602	2943	Sisma Y SLD	0	29.9	0	0	3.0E2	0.585
10603	2944	Sisma X SLV	32.7	0	0	0	3.3E2	0.585	10604	2944	Sisma Y SLV	0	32.7	0	0	3.3E2	0.585
10605	2944	Sisma X SLD	32.1	0	0	0	3.3E2	0.585	10606	2944	Sisma Y SLD	0	32.1	0	0	3.3E2	0.585
10607	2945	Sisma X SLV	9.5	0	0	0	94.747	0.585	10608	2945	Sisma Y SLV	0	9.5	0	0	94.747	0.585
10609	2945	Sisma X SLD	9.3	0	0	0	94.747	0.585	10610	2945	Sisma Y SLD	0	9.3	0	0	94.747	0.585
10611	2946	Sisma X SLV	10.1	0	0	0	100.67	0.585	10612	2946	Sisma Y SLV	0	10.1	0	0	100.67	0.585
10613	2946	Sisma X SLD	9.9	0	0	0	100.67	0.585	10614	2946	Sisma Y SLD	0	9.9	0	0	100.67	0.585
10615	2947	Sisma X SLV	29.1	0	0	0	2.9E2	0.585	10616	2947	Sisma Y SLV	0	29.1	0	0	2.9E2	0.585
10617	2947	Sisma X SLD	28.7	0	0	0	2.9E2	0.585	10618	2947	Sisma Y SLD	0	28.7	0	0	2.9E2	0.585
10619	2948	Sisma X SLV	28.7	0	0	0	2.9E2	0.585	10620	2948	Sisma Y SLV	0	28.7	0	0	2.9E2	0.585
10621	2948	Sisma X SLD	28.2	0	0	0	2.9E2	0.585	10622	2948	Sisma Y SLD	0	28.2	0	0	2.9E2	0.585
10623	2949	Sisma X SLV	30.5	0	0	0	3.1E2	0.585	10624	2949	Sisma Y SLV	0	30.5	0	0	3.1E2	0.585
10625	2949	Sisma X SLD	30	0	0	0	3.1E2	0.585	10626	2949	Sisma Y SLD	0	30	0	0	3.1E2	0.585
10627	2950	Sisma X SLV	19.1	0	0	0	1.9E2	0.586	10628	2950	Sisma Y SLV	0	19.1	0	0	1.9E2	0.586
10629	2950	Sisma X SLD	18.8	0	0	0	1.9E2	0.586	10630	2950	Sisma Y SLD	0	18.8	0	0	1.9E2	0.586
10631	2951	Sisma X SLV	30	0	0	0	3.0E2	0.586	10632	2951	Sisma Y SLV	0	30	0	0	3.0E2	0.586
10633	2951	Sisma X SLD	29.5	0	0	0	3.0E2	0.586	10634	2951	Sisma Y SLD	0	29.5	0	0	3.0E2	0.586
10635	2952	Sisma X SLV	29.6	0	0	0	3.0E2	0.586	10636	2952	Sisma Y SLV	0	29.6	0	0	3.0E2	0.586
10637	2952	Sisma X SLD	29.1	0	0	0	3.0E2	0.586	10638	2952	Sisma Y SLD	0	29.1	0	0	3.0E2	0.586
10639	2953	Sisma X SLV	30.1	0	0	0	301.17	0.586	10640	2953	Sisma Y SLV	0	30.1	0	0	301.17	0.586
10641	2953	Sisma X SLD	29.6	0	0	0	301.17	0.586	10642	2953	Sisma Y SLD	0	29.6	0	0	301.17	0.586
10643	2954	Sisma X SLV	29.6	0	0	0	3.0E2	0.586	10644	2954	Sisma Y SLV	0	29.6	0	0	3.0E2	0.586
10645	2954	Sisma X SLD	29.2	0	0	0	3.0E2	0.586	10646	2954	Sisma Y SLD	0	29.2	0	0	3.0E2	0.586
10647	2955	Sisma X SLV	31.1	0	0	0	310.87	0.586	10648	2955	Sisma Y SLV	0	31.1	0	0	310.87	0.586
10649	2955	Sisma X SLD	30.6	0	0	0	310.87	0.586	10650	2955	Sisma Y SLD	0	30.6	0	0	310.87	0.586
10651	2956	Sisma X SLV	30.7	0	0	0	3.1E2	0.586	10652	2956	Sisma Y SLV	0	30.7	0	0	3.1E2	0.586
10653	2956	Sisma X SLD	30.2	0	0	0	3.1E2	0.586	10654	2956	Sisma Y SLD	0	30.2	0	0	3.1E2	0.586
10655	2957	Sisma X SLV	31	0	0	0	3.1E2	0.586	10656	2957	Sisma Y SLV	0	31	0	0	3.1E2	0.586
10657	2957	Sisma X SLD	30.5	0	0	0	3.1E2	0.586	10658	2957	Sisma Y SLD	0	30.5	0	0	3.1E2	0.586
10659	2958	Sisma X SLV	30	0	0	0	3.0E2	0.586	10660	2958	Sisma Y SLV	0	30	0	0	3.0E2	0.586
10661	2958	Sisma X SLD	29.5	0	0	0	3.0E2	0.586	10662	2958	Sisma Y SLD	0	29.5	0	0	3.0E2	0.586
10663	2959	Sisma X SLV	30.8	0	0	0	3.1E2	0.586	10664	2959	Sisma Y SLV	0	30.8	0	0	3.1E2	0.586
10665	2959	Sisma X SLD	30.3	0	0	0	3.1E2	0.586	10666	2959	Sisma Y SLD	0	30.3	0	0	3.1E2	0.586
10667	2960	Sisma X SLV	28.6	0	0	0	2.9E2	0.586	10668	2960	Sisma Y SLV	0	28.6	0	0	2.9E2	0.586
10669	2960	Sisma X SLD	28.2	0	0	0	2.9E2	0.586	10670	2960	Sisma Y SLD	0	28.2	0	0	2.9E2	0.586
10671	2961	Sisma X SLV	25.1	0	0	0	2.5E2	0.586	10672	2961	Sisma Y SLV	0	25.1	0	0	2.5E2	0.586
10673	2961	Sisma X SLD	24.7	0	0	0	2.5E2	0.586	10674	2961	Sisma Y SLD	0	24.7	0	0	2.5E2	0.586
10675	2962	Sisma X SLV	28.9	0	0	0	2.9E2	0.586	10676	2962	Sisma Y SLV	0	28.9	0	0	2.9E2	0.586
10677	2962	Sisma X SLD	28.4	0	0	0	2.9E2	0.586	10678	2962	Sisma Y SLD	0	28.4	0	0	2.9E2	0.586
10679	2963	Sisma X SLV	29.1	0	0	0	2.9E2	0.586	10680	2963	Sisma Y SLV	0	29.1	0	0	2.9E2	0.586
10681	2963	Sisma X SLD	28.7	0	0	0	2.9E2	0.586	10682	2963	Sisma Y SLD	0	28.7	0	0	2.9E2	0.586
10683	2964	Sisma X SLV	30	0	0	0	3.0E2	0.586	10684	2964	Sisma Y SLV	0	30	0	0	3.0E2	0.586
10685	2964	Sisma X SLD	29.5	0	0	0	3.0E2	0.586	10686	2964	Sisma Y SLD	0	29.5	0	0	3.0E2	0.586
10687	2965	Sisma X SLV	31.9	0	0	0	3.2E2	0.586	10688	2965	Sisma Y SLV	0	31.9	0	0	3.2E2	0.586
10689	2965	Sisma X SLD	31.3	0	0	0	3.2E2	0.586	10690	2965	Sisma Y SLD	0	31.3	0	0	3.2E2	0.586
10691	2966	Sisma X SLV	10.7	0	0	0	107.07	0.586	10692	2966	Sisma Y SLV	0	10.7	0	0	107.07	0.586
10693	2966	Sisma X SLD	10.5	0	0	0	107.07	0.586	10694	2966	Sisma Y SLD	0	10.5	0	0	107.07	0.586
10695	2967	Sisma X SLV	18.4	0	0	0	1.8E2	0.586	10696	2967	Sisma Y SLV	0	18.4	0	0	1.8E2	0.586
10697	2967	Sisma X SLD	18.1	0	0	0	1.8E2	0.586	10698	2967	Sisma Y SLD	0	18.1	0	0	1.8E2	0.586
10699	2968	Sisma X SLV	28.1	0	0	0	2.8E2	0.586	10700	2968	Sisma Y SLV	0	28.1	0	0	2.8E2	0.586
10701	2968	Sisma X SLD	27.7	0	0	0	2.8E2	0.586	10702	2968	Sisma Y SLD	0	27.7	0	0	2.8E2	0.586
10703	2969	Sisma X SLV	30.7	0	0	0	3.1E2	0.587	10704	2969	Sisma Y SLV	0	30.7	0	0	3.1E2	0.587
10705	2969	Sisma X SLD	30.2	0	0	0	3.1E2	0.587	10706	2969	Sisma Y SLD	0	30.2	0	0	3.1E2	0.587
10707	2970	Sisma X SLV	28.6	0	0	0	2.9E2	0.587	10708	2970	Sisma Y SLV	0	28.6	0	0	2.9E2	0.587
10709	2970	Sisma X SLD	28.1	0	0	0	2.9E2	0.587	10710	2970	Sisma Y SLD	0	28.1	0	0	2.9E2	0.587
10711	2971	Sisma X SLV	29.8	0	0	0	3.0E2	0.587	10712	2971	Sisma Y SLV	0	29.8	0	0	3.0E2	0.587
10713	2971	Sisma X SLD	29.3	0	0	0	3.0E2	0.587	10714	2971	Sisma Y SLD	0	29.3	0	0	3.0E2	0.587
10715	2972	Sisma X SLV	29.8	0	0	0	3.0E2	0.587	10716	2972	Sisma Y SLV	0	29.8	0	0	3.0E2	0.587
10717	2972	Sisma X SLD	29.3	0	0	0	3.0E2	0.587	10718	2972	Sisma Y SLD	0	29.3	0	0	3.0E2	0.587
10719	2973	Sisma X SLV	28.1	0	0	0	280.84	0.587	10720	2973	Sisma Y SLV	0	28.1	0	0	280.84	0.587
10721	2973	Sisma X SLD	27.7	0	0	0	280.84	0.587	10722	2973	Sisma Y SLD	0	27.7	0	0	280.84	0.587
10723	2974	Sisma X SLV	28.5	0	0	0	2.8E2	0.587	10724	2974	Sisma Y SLV	0	28.5	0	0	2.8E2	0.587
10725	2974	Sisma X SLD	28.1	0	0	0	2.8E2	0.587	10726	2974	Sisma Y SLD	0	28.1	0	0	2.8E2	0.587
10727	2975	Sisma X SLV	27.2	0	0	0	2.7E2	0.587	10728	2975	Sisma Y SLV	0	27.2	0	0	2.7E2	0.587
10729	2975	Sisma X SLD	26.8	0	0	0	2.7E2	0.587	10730	2975	Sisma Y SLD	0	26.8	0	0	2.7E2	0.587
10731	2976	Sisma X SLV	30.4	0	0	0	3.0E2	0.588	10732	2976	Sisma Y SLV	0	30.4	0	0	3.0E2	0.588
10733	2976	Sisma X SLD	29.9	0	0	0	3.0E2	0.588	10734	2976	Sisma Y SLD	0	29.9	0	0	3.0E2	0.588
10735	2977	Sisma X SLV	29.6	0	0	0	3.0E2	0.588	10736	2977	Sisma Y SLV	0	29.6	0	0	3.0E2	0.588
10737	2977	Sisma X SLD	29.1	0	0	0	3.0E2	0.588	10738	2977	Sisma Y SLD	0	29.1	0	0	3.0E2	0.588
10739	2978	Sisma X SLV	30.8	0	0	0	3.1E2	0.588	10740	2978	Sisma Y SLV	0	30.8	0	0	3.1E2	0.588
10741	2978	Sisma X SLD	30.3	0	0	0	3.1E2	0.588	10742	2978	Sisma Y SLD	0	30.3	0	0	3.1E2	0.588
10743	2979	Sisma X SLV	29.1	0	0	0	2.9E2	0.588	10744	2979	Sisma Y SLV	0	29.1	0	0	2.9E2	0.588
10745	2979	Sisma X SLD	28.7	0	0	0	2.9E2	0.588	10746	2979	Sisma Y SLD	0	28.7	0	0	2.9E2	0.588
10747	2980	Sisma X SLV	29.6	0	0	0	3.0E2	0.588	10748	2980	Sisma Y SLV	0	29.6	0	0	3.0E2	0.588
10749	2980	Sisma X SLD	29.1	0	0	0	3.0E2	0.588	10750	2980	Sisma Y SLD	0	29.1	0	0	3.0E2	0.588
10751	2981	Sisma X SLV	30.9	0	0	0	3.1E2	0.588	10752	2981	Sisma Y SLV	0	30.9	0	0	3.1E2	0.588
10753	2981	Sisma X SLD	30.4	0	0	0	3.1E2	0.588	10754	2981	Sisma Y SLD	0	30.4	0	0	3.1E2	0.588
10755	2982	Sisma X SLV	29.2	0	0	0	291.29	0.588	10756	2982	Sisma Y SLV	0	29.2	0	0	291.29	0.588
10757	2982	Sisma X SLD	28.8	0	0	0	291.29	0.588	10758	2982	Sisma Y SLD	0	28.8	0	0	291.29	0.588
10759	2983	Sisma X SLV	29.9	0	0	0	3.0E2	0.588	10760	2983	Sisma Y SLV	0	29.9	0	0	3.0E2	0.588
10761	2983	Sisma X SLD	29.4	0	0	0	3.0E2	0.588	10762	2983	Sisma Y SLD	0	29.4	0	0	3.0E2	0.588
10763	2984	Sisma X SLV	10.6	0	0	0	1.1E2	0.588	10764	2984	Sisma Y SLV	0	10.6	0	0	1.1E2	0.588

Indice	Nodo	Condizione	Fx	Fy	Fz	Mz	Peso	Gamma	Indice	Nodo	Condizione	Fx	Fy	Fz	Mz	Peso	Gamma
10765	2984	Sisma X SLD	10.5	0	0	0	1.1E2	0.588	10766	2984	Sisma Y SLD	0	10.5	0	0	1.1E2	0.588
10767	2985	Sisma X SLV	28.5	0	0	0	2.8E2	0.588	10768	2985	Sisma Y SLV	0	28.5	0	0	2.8E2	0.588
10769	2985	Sisma X SLD	28	0	0	0	2.8E2	0.588	10770	2985	Sisma Y SLD	0	28	0	0	2.8E2	0.588
10771	2986	Sisma X SLV	30.1	0	0	0	3.0E2	0.588	10772	2986	Sisma Y SLV	0	30.1	0	0	3.0E2	0.588
10773	2986	Sisma X SLD	29.6	0	0	0	3.0E2	0.588	10774	2986	Sisma Y SLD	0	29.6	0	0	3.0E2	0.588
10775	2987	Sisma X SLV	29.3	0	0	0	2.9E2	0.588	10776	2987	Sisma Y SLV	0	29.3	0	0	2.9E2	0.588
10777	2987	Sisma X SLD	28.9	0	0	0	2.9E2	0.588	10778	2987	Sisma Y SLD	0	28.9	0	0	2.9E2	0.588
10779	2988	Sisma X SLV	30.6	0	0	0	3.0E2	0.588	10780	2988	Sisma Y SLV	0	30.6	0	0	3.0E2	0.588
10781	2988	Sisma X SLD	30.1	0	0	0	3.0E2	0.588	10782	2988	Sisma Y SLD	0	30.1	0	0	3.0E2	0.588
10783	2989	Sisma X SLV	28.7	0	0	0	2.9E2	0.588	10784	2989	Sisma Y SLV	0	28.7	0	0	2.9E2	0.588
10785	2989	Sisma X SLD	28.2	0	0	0	2.9E2	0.588	10786	2989	Sisma Y SLD	0	28.2	0	0	2.9E2	0.588
10787	2990	Sisma X SLV	29.4	0	0	0	2.9E2	0.588	10788	2990	Sisma Y SLV	0	29.4	0	0	2.9E2	0.588
10789	2990	Sisma X SLD	28.9	0	0	0	2.9E2	0.588	10790	2990	Sisma Y SLD	0	28.9	0	0	2.9E2	0.588
10791	2991	Sisma X SLV	30.9	0	0	0	3.1E2	0.588	10792	2991	Sisma Y SLV	0	30.9	0	0	3.1E2	0.588
10793	2991	Sisma X SLD	30.4	0	0	0	3.1E2	0.588	10794	2991	Sisma Y SLD	0	30.4	0	0	3.1E2	0.588
10795	2992	Sisma X SLV	29	0	0	0	2.9E2	0.588	10796	2992	Sisma Y SLV	0	29	0	0	2.9E2	0.588
10797	2992	Sisma X SLD	28.6	0	0	0	2.9E2	0.588	10798	2992	Sisma Y SLD	0	28.6	0	0	2.9E2	0.588
10799	2993	Sisma X SLV	10.3	0	0	0	1.0E2	0.588	10800	2993	Sisma Y SLV	0	10.3	0	0	1.0E2	0.588
10801	2993	Sisma X SLD	10.1	0	0	0	1.0E2	0.588	10802	2993	Sisma Y SLD	0	10.1	0	0	1.0E2	0.588
10803	2994	Sisma X SLV	30.4	0	0	0	3.0E2	0.589	10804	2994	Sisma Y SLV	0	30.4	0	0	3.0E2	0.589
10805	2994	Sisma X SLD	29.9	0	0	0	3.0E2	0.589	10806	2994	Sisma Y SLD	0	29.9	0	0	3.0E2	0.589
10807	2995	Sisma X SLV	27.6	0	0	0	2.7E2	0.589	10808	2995	Sisma Y SLV	0	27.6	0	0	2.7E2	0.589
10809	2995	Sisma X SLD	27.1	0	0	0	2.7E2	0.589	10810	2995	Sisma Y SLD	0	27.1	0	0	2.7E2	0.589
10811	2996	Sisma X SLV	28.4	0	0	0	283.11	0.589	10812	2996	Sisma Y SLV	0	28.4	0	0	283.11	0.589
10813	2996	Sisma X SLD	28	0	0	0	283.11	0.589	10814	2996	Sisma Y SLD	0	28	0	0	283.11	0.589
10815	2997	Sisma X SLV	29.4	0	0	0	2.9E2	0.589	10816	2997	Sisma Y SLV	0	29.4	0	0	2.9E2	0.589
10817	2997	Sisma X SLD	29	0	0	0	2.9E2	0.589	10818	2997	Sisma Y SLD	0	29	0	0	2.9E2	0.589
10819	2998	Sisma X SLV	26.8	0	0	0	2.7E2	0.589	10820	2998	Sisma Y SLV	0	26.8	0	0	2.7E2	0.589
10821	2998	Sisma X SLD	26.4	0	0	0	2.7E2	0.589	10822	2998	Sisma Y SLD	0	26.4	0	0	2.7E2	0.589
10823	2999	Sisma X SLV	10.9	0	0	0	1.1E2	0.589	10824	2999	Sisma Y SLV	0	10.9	0	0	1.1E2	0.589
10825	2999	Sisma X SLD	10.8	0	0	0	1.1E2	0.589	10826	2999	Sisma Y SLD	0	10.8	0	0	1.1E2	0.589
10827	3000	Sisma X SLV	28.4	0	0	0	2.8E2	0.589	10828	3000	Sisma Y SLV	0	28.4	0	0	2.8E2	0.589
10829	3000	Sisma X SLD	27.9	0	0	0	2.8E2	0.589	10830	3000	Sisma Y SLD	0	27.9	0	0	2.8E2	0.589
10831	3001	Sisma X SLV	29.9	0	0	0	3.0E2	0.589	10832	3001	Sisma Y SLV	0	29.9	0	0	3.0E2	0.589
10833	3001	Sisma X SLD	29.4	0	0	0	3.0E2	0.589	10834	3001	Sisma Y SLD	0	29.4	0	0	3.0E2	0.589
10835	3002	Sisma X SLV	29.7	0	0	0	3.0E2	0.589	10836	3002	Sisma Y SLV	0	29.7	0	0	3.0E2	0.589
10837	3002	Sisma X SLD	29.3	0	0	0	3.0E2	0.589	10838	3002	Sisma Y SLD	0	29.3	0	0	3.0E2	0.589
10839	3003	Sisma X SLV	28.9	0	0	0	2.9E2	0.589	10840	3003	Sisma Y SLV	0	28.9	0	0	2.9E2	0.589
10841	3003	Sisma X SLD	28.4	0	0	0	2.9E2	0.589	10842	3003	Sisma Y SLD	0	28.4	0	0	2.9E2	0.589
10843	3004	Sisma X SLV	30.4	0	0	0	3.0E2	0.589	10844	3004	Sisma Y SLV	0	30.4	0	0	3.0E2	0.589
10845	3004	Sisma X SLD	29.9	0	0	0	3.0E2	0.589	10846	3004	Sisma Y SLD	0	29.9	0	0	3.0E2	0.589
10847	3005	Sisma X SLV	28.1	0	0	0	2.8E2	0.589	10848	3005	Sisma Y SLV	0	28.1	0	0	2.8E2	0.589
10849	3005	Sisma X SLD	27.7	0	0	0	2.8E2	0.589	10850	3005	Sisma Y SLD	0	27.7	0	0	2.8E2	0.589
10851	3006	Sisma X SLV	28.9	0	0	0	2.9E2	0.59	10852	3006	Sisma Y SLV	0	28.9	0	0	2.9E2	0.59
10853	3006	Sisma X SLD	28.4	0	0	0	2.9E2	0.59	10854	3006	Sisma Y SLD	0	28.4	0	0	2.9E2	0.59
10855	3007	Sisma X SLV	30.7	0	0	0	3.1E2	0.59	10856	3007	Sisma Y SLV	0	30.7	0	0	3.1E2	0.59
10857	3007	Sisma X SLD	30.3	0	0	0	3.1E2	0.59	10858	3007	Sisma Y SLD	0	30.3	0	0	3.1E2	0.59
10859	3008	Sisma X SLV	28.5	0	0	0	283.15	0.59	10860	3008	Sisma Y SLV	0	28.5	0	0	283.15	0.59
10861	3008	Sisma X SLD	28	0	0	0	283.15	0.59	10862	3008	Sisma Y SLD	0	28	0	0	283.15	0.59
10863	3009	Sisma X SLV	17	0	0	0	1.7E2	0.59	10864	3009	Sisma Y SLV	0	17	0	0	1.7E2	0.59
10865	3009	Sisma X SLD	16.7	0	0	0	1.7E2	0.59	10866	3009	Sisma Y SLD	0	16.7	0	0	1.7E2	0.59
10867	3010	Sisma X SLV	28.4	0	0	0	2.8E2	0.59	10868	3010	Sisma Y SLV	0	28.4	0	0	2.8E2	0.59
10869	3010	Sisma X SLD	27.9	0	0	0	2.8E2	0.59	10870	3010	Sisma Y SLD	0	27.9	0	0	2.8E2	0.59
10871	3011	Sisma X SLV	27.5	0	0	0	2.7E2	0.59	10872	3011	Sisma Y SLV	0	27.5	0	0	2.7E2	0.59
10873	3011	Sisma X SLD	27	0	0	0	2.7E2	0.59	10874	3011	Sisma Y SLD	0	27	0	0	2.7E2	0.59
10875	3012	Sisma X SLV	29.3	0	0	0	2.9E2	0.59	10876	3012	Sisma Y SLV	0	29.3	0	0	2.9E2	0.59
10877	3012	Sisma X SLD	28.8	0	0	0	2.9E2	0.59	10878	3012	Sisma Y SLD	0	28.8	0	0	2.9E2	0.59
10879	3013	Sisma X SLV	28.6	0	0	0	2.8E2	0.59	10880	3013	Sisma Y SLV	0	28.6	0	0	2.8E2	0.59
10881	3013	Sisma X SLD	28.1	0	0	0	2.8E2	0.59	10882	3013	Sisma Y SLD	0	28.1	0	0	2.8E2	0.59
10883	3014	Sisma X SLV	30.1	0	0	0	3.0E2	0.59	10884	3014	Sisma Y SLV	0	30.1	0	0	3.0E2	0.59
10885	3014	Sisma X SLD	29.6	0	0	0	3.0E2	0.59	10886	3014	Sisma Y SLD	0	29.6	0	0	3.0E2	0.59
10887	3015	Sisma X SLV	27.9	0	0	0	2.8E2	0.59	10888	3015	Sisma Y SLV	0	27.9	0	0	2.8E2	0.59
10889	3015	Sisma X SLD	27.5	0	0	0	2.8E2	0.59	10890	3015	Sisma Y SLD	0	27.5	0	0	2.8E2	0.59
10891	3016	Sisma X SLV	26.9	0	0	0	2.7E2	0.59	10892	3016	Sisma Y SLV	0	26.9	0	0	2.7E2	0.59
10893	3016	Sisma X SLD	26.5	0	0	0	2.7E2	0.59	10894	3016	Sisma Y SLD	0	26.5	0	0	2.7E2	0.59
10895	3017	Sisma X SLV	28.3	0	0	0	2.8E2	0.591	10896	3017	Sisma Y SLV	0	28.3	0	0	2.8E2	0.591
10897	3017	Sisma X SLD	27.9	0	0	0	2.8E2	0.591	10898	3017	Sisma Y SLD	0	27.9	0	0	2.8E2	0.591
10899	3018	Sisma X SLV	28.7	0	0	0	2.8E2	0.591	10900	3018	Sisma Y SLV	0	28.7	0	0	2.8E2	0.591
10901	3018	Sisma X SLD	28.2	0	0	0	2.8E2	0.591	10902	3018	Sisma Y SLD	0	28.2	0	0	2.8E2	0.591
10903	3019	Sisma X SLV	28.4	0	0	0	282.07	0.591	10904	3019	Sisma Y SLV	0	28.4	0	0	282.07	0.591
10905	3019	Sisma X SLD	28	0	0	0	282.07	0.591	10906	3019	Sisma Y SLD	0	28	0	0	282.07	0.591
10907	3020	Sisma X SLV	30	0	0	0	297.04	0.591	10908	3020	Sisma Y SLV	0	30	0	0	297.04	0.591
10909	3020	Sisma X SLD	29.5	0	0	0	297.04	0.591	10910	3020	Sisma Y SLD	0	29.5	0	0	297.04	0.591
10911	3021	Sisma X SLV	27.8	0	0	0	2.8E2	0.591	10912	3021	Sisma Y SLV	0	27.8	0	0	2.8E2	0.591
10913	3021	Sisma X SLD	27.4	0	0	0	2.8E2	0.591	10914	3021	Sisma Y SLD	0	27.4	0	0	2.8E2	0.591
10915	3022	Sisma X SLV	29.4	0	0	0	2.9E2	0.591	10916	3022	Sisma Y SLV	0	29.4	0	0	2.9E2	0.591
10917	3022	Sisma X SLD	28.9	0	0	0	2.9E2	0.591	10918	3022	Sisma Y SLD	0	28.9	0	0	2.9E2	0.591
10919	3023	Sisma X SLV	28.2	0	0	0	2.8E2	0.591	10920	3023	Sisma Y SLV	0	28.2	0	0	2.8E2	0.591
10921	3023	Sisma X SLD	27.7	0	0	0	2.8E2	0.591	10922	3023	Sisma Y SLD	0	27.7	0	0	2.8E2	0.591
10923	3024	Sisma X SLV	28.4	0	0	0	2.8E2	0.591	10924	3024	Sisma Y SLV	0	28.4	0	0	2.8E2	0.591
10925	3024	Sisma X SLD	27.9	0	0	0	2.8E2	0.591	10926	3024	Sisma Y SLD	0	27.9	0	0	2.8E2	0.591
10927	3025	Sisma X SLV	29.9	0	0	0	3.0E2	0.591	10928	3025	Sisma Y SLV	0	29.9	0	0	3.0E2	0.591
10929	3025	Sisma X SLD	29.4	0	0	0	3.0E2	0.591	10930	3025	Sisma Y SLD	0	29.4	0	0	3.0E2	0.591
10931	3026	Sisma X SLV	27.8	0	0	0	2.8E2	0.591	10932	3026	Sisma Y SLV	0	27.8	0	0	2.8E2	0.591
10933	3026	Sisma X SLD	27.4	0	0	0	2.8E2	0.591	10934	3026	Sisma Y SLD	0	27.4	0	0	2.8E2	0.591
10935	3027	Sisma X SLV	27.9	0	0	0	2.8E2	0.591	10936	3027	Sisma Y SLV	0	27.9	0	0	2.8E2	0.591
10937	3027	Sisma X SLD	27.5	0	0	0	2.8E2	0.591	10938	3027	Sisma Y SLD	0	27.5	0	0	2.8E2	0.591
10939	3028	Sisma X SLV	28.4	0	0	0	2.8E2	0.591	10940	3028	Sisma Y SLV	0	28.4	0	0	2.8E2	0.591
10941	3028	Sisma X SLD	27.9	0	0	0	2.8E2	0.591	10942	3028	Sisma Y SLD	0	27.9	0	0	2.8E2	0.591
10943	3029	Sisma X SLV	27.9	0	0	0	2.8E2	0.591	10944	3029	Sisma Y SLV	0	27.9	0	0	2.8E2	0.591
10945	3029	Sisma X SLD	27.4	0	0	0	2.8E2	0.591	10946	3029	Sisma Y SLD	0	27.4	0	0	2.8E2	0.591
10947	3030	Sisma X SLV	29.9	0	0	0	3.0E2	0.591	10948	3030	Sisma Y SLV	0	29.9	0	0	3.0E2	0.591
10949	3030	Sisma X SLD	29.4	0	0	0	3.0E2	0.591	10950	3030	Sisma Y SLD	0	29.4	0	0	3.0E2	0.591
10951	3031	Sisma X SLV	27.9	0	0	0	2.8E2	0.591	10952	3031	Sisma Y SLV	0	27.9	0	0	2.8E2	0.591
10953	3031	Sisma X SLD	27.4	0	0	0	2.8E2	0.591	10954	3031	Sisma Y SLD	0	27.4	0	0	2.8E2	0.591
10955	3032	Sisma X SLV	28.4	0	0	0	2.8E2	0.591	10956	3032	Sisma Y SLV	0	28.4	0	0	2.8E2	0.591
10957	3032	Sisma X SLD	27.9	0	0	0	2.8E2	0.591	10958	3032	Sisma Y SLD	0	27.9	0	0	2.8E2	0.591
10959	3033	Sisma X SLV	27.9	0	0	0	2.8E2	0.591	10960	3033	Sisma Y SLV	0	27.9	0	0	2.8E2	0.591
10961	3033	Sisma X SLD	27.4	0	0	0	2.8E2	0.591	10962	3033	Sisma Y SLD	0	27.4	0	0	2.8E2	0.591
10963	3034	Sisma X SLV	28.4	0	0	0	2.8E2	0.591	10964	3034	Sisma Y SLV	0	28.4	0	0	2.8E2	0.591
10965	3034	Sisma X SLD	27.9	0	0	0	2.8E2	0.591	10966	3034	Sisma Y SLD	0	27.9	0	0	2.8E2	0.591
10967	3035	Sisma X SLV	27.9	0	0	0	2.8E2	0.591	10968	3035	Sisma Y SLV	0	27.9	0	0	2.8E2	0.591
10969	3035	Sisma X SLD	27.4	0	0	0	2.8E2	0.591	10970	3035	Sisma Y SLD	0	27.4	0	0	2.8E2	0.591
10971	3036	Sisma X SLV	27.8	0	0	0	2.8E2	0.591	10972	3036	Sisma Y SLV	0	27.8	0	0	2.8E2	0.591

muratura

Indice	Nodo	Condizione	Fx	Fy	Fz	Mz	Peso	Gamma	Indice	Nodo	Condizione	Fx	Fy	Fz	Mz	Peso	Gamma
10973	3036	Sisma X SLD	27.3	0	0	0	2.8E2	0.591	10974	3036	Sisma Y SLD	0	27.3	0	0	2.8E2	0.591
10975	3037	Sisma X SLV	44.9	0	0	0	4.5E2	0.591	10976	3037	Sisma Y SLV	0	44.9	0	0	4.5E2	0.591
10977	3037	Sisma X SLD	44.2	0	0	0	4.5E2	0.591	10978	3037	Sisma Y SLD	0	44.2	0	0	4.5E2	0.591
10979	3038	Sisma X SLV	43.6	0	0	0	4.3E2	0.591	10980	3038	Sisma Y SLV	0	43.6	0	0	4.3E2	0.591
10981	3038	Sisma X SLD	42.9	0	0	0	4.3E2	0.591	10982	3038	Sisma Y SLD	0	42.9	0	0	4.3E2	0.591
10983	3039	Sisma X SLV	28.4	0	0	0	2.8E2	0.591	10984	3039	Sisma Y SLV	0	28.4	0	0	2.8E2	0.591
10985	3039	Sisma X SLD	27.9	0	0	0	2.8E2	0.591	10986	3039	Sisma Y SLD	0	27.9	0	0	2.8E2	0.591
10987	3040	Sisma X SLV	28.1	0	0	0	278.11	0.591	10988	3040	Sisma Y SLV	0	28.1	0	0	278.11	0.591
10989	3040	Sisma X SLD	27.6	0	0	0	278.11	0.591	10990	3040	Sisma Y SLD	0	27.6	0	0	278.11	0.591
10991	3041	Sisma X SLV	29.8	0	0	0	3.0E2	0.591	10992	3041	Sisma Y SLV	0	29.8	0	0	3.0E2	0.591
10993	3041	Sisma X SLD	29.3	0	0	0	3.0E2	0.591	10994	3041	Sisma Y SLD	0	29.3	0	0	3.0E2	0.591
10995	3042	Sisma X SLV	29.8	0	0	0	3.0E2	0.591	10996	3042	Sisma Y SLV	0	29.8	0	0	3.0E2	0.591
10997	3042	Sisma X SLD	29.3	0	0	0	3.0E2	0.591	10998	3042	Sisma Y SLD	0	29.3	0	0	3.0E2	0.591
10999	3043	Sisma X SLV	30.5	0	0	0	3.0E2	0.591	11000	3043	Sisma Y SLV	0	30.5	0	0	3.0E2	0.591
11001	3043	Sisma X SLD	30	0	0	0	3.0E2	0.591	11002	3043	Sisma Y SLD	0	30	0	0	3.0E2	0.591
11003	3044	Sisma X SLV	30.5	0	0	0	3.0E2	0.591	11004	3044	Sisma Y SLV	0	30.5	0	0	3.0E2	0.591
11005	3044	Sisma X SLD	30	0	0	0	3.0E2	0.591	11006	3044	Sisma Y SLD	0	30	0	0	3.0E2	0.591
11007	3045	Sisma X SLV	31.5	0	0	0	3.1E2	0.591	11008	3045	Sisma Y SLV	0	31.5	0	0	3.1E2	0.591
11009	3045	Sisma X SLD	31	0	0	0	3.1E2	0.591	11010	3045	Sisma Y SLD	0	31	0	0	3.1E2	0.591
11011	3046	Sisma X SLV	31.5	0	0	0	3.1E2	0.591	11012	3046	Sisma Y SLV	0	31.5	0	0	3.1E2	0.591
11013	3046	Sisma X SLD	31	0	0	0	3.1E2	0.591	11014	3046	Sisma Y SLD	0	31	0	0	3.1E2	0.591
11015	3047	Sisma X SLV	32.7	0	0	0	3.2E2	0.591	11016	3047	Sisma Y SLV	0	32.7	0	0	3.2E2	0.591
11017	3047	Sisma X SLD	32.2	0	0	0	3.2E2	0.591	11018	3047	Sisma Y SLD	0	32.2	0	0	3.2E2	0.591
11019	3048	Sisma X SLV	32.7	0	0	0	3.2E2	0.591	11020	3048	Sisma Y SLV	0	32.7	0	0	3.2E2	0.591
11021	3048	Sisma X SLD	32.2	0	0	0	3.2E2	0.591	11022	3048	Sisma Y SLD	0	32.2	0	0	3.2E2	0.591
11023	3049	Sisma X SLV	33.6	0	0	0	3.3E2	0.591	11024	3049	Sisma Y SLV	0	33.6	0	0	3.3E2	0.591
11025	3049	Sisma X SLD	33.1	0	0	0	3.3E2	0.591	11026	3049	Sisma Y SLD	0	33.1	0	0	3.3E2	0.591
11027	3050	Sisma X SLV	33.6	0	0	0	3.3E2	0.591	11028	3050	Sisma Y SLV	0	33.6	0	0	3.3E2	0.591
11029	3050	Sisma X SLD	33.1	0	0	0	3.3E2	0.591	11030	3050	Sisma Y SLD	0	33.1	0	0	3.3E2	0.591
11031	3051	Sisma X SLV	34.2	0	0	0	3.4E2	0.591	11032	3051	Sisma Y SLV	0	34.2	0	0	3.4E2	0.591
11033	3051	Sisma X SLD	33.7	0	0	0	3.4E2	0.591	11034	3051	Sisma Y SLD	0	33.7	0	0	3.4E2	0.591
11035	3052	Sisma X SLV	34.2	0	0	0	3.4E2	0.591	11036	3052	Sisma Y SLV	0	34.2	0	0	3.4E2	0.591
11037	3052	Sisma X SLD	33.7	0	0	0	3.4E2	0.591	11038	3052	Sisma Y SLD	0	33.7	0	0	3.4E2	0.591
11039	3053	Sisma X SLV	34.6	0	0	0	3.4E2	0.591	11040	3053	Sisma Y SLV	0	34.6	0	0	3.4E2	0.591
11041	3053	Sisma X SLD	34.1	0	0	0	3.4E2	0.591	11042	3053	Sisma Y SLD	0	34.1	0	0	3.4E2	0.591
11043	3054	Sisma X SLV	34.6	0	0	0	3.4E2	0.591	11044	3054	Sisma Y SLV	0	34.6	0	0	3.4E2	0.591
11045	3054	Sisma X SLD	34.1	0	0	0	3.4E2	0.591	11046	3054	Sisma Y SLD	0	34.1	0	0	3.4E2	0.591
11047	3055	Sisma X SLV	34.9	0	0	0	3.5E2	0.591	11048	3055	Sisma Y SLV	0	34.9	0	0	3.5E2	0.591
11049	3055	Sisma X SLD	34.3	0	0	0	3.5E2	0.591	11050	3055	Sisma Y SLD	0	34.3	0	0	3.5E2	0.591
11051	3056	Sisma X SLV	34.9	0	0	0	3.5E2	0.591	11052	3056	Sisma Y SLV	0	34.9	0	0	3.5E2	0.591
11053	3056	Sisma X SLD	34.3	0	0	0	3.5E2	0.591	11054	3056	Sisma Y SLD	0	34.3	0	0	3.5E2	0.591
11055	3057	Sisma X SLV	35	0	0	0	3.5E2	0.591	11056	3057	Sisma Y SLV	0	35	0	0	3.5E2	0.591
11057	3057	Sisma X SLD	34.4	0	0	0	3.5E2	0.591	11058	3057	Sisma Y SLD	0	34.4	0	0	3.5E2	0.591
11059	3058	Sisma X SLV	35	0	0	0	3.5E2	0.591	11060	3058	Sisma Y SLV	0	35	0	0	3.5E2	0.591
11061	3058	Sisma X SLD	34.4	0	0	0	3.5E2	0.591	11062	3058	Sisma Y SLD	0	34.4	0	0	3.5E2	0.591
11063	3059	Sisma X SLV	35	0	0	0	3.5E2	0.591	11064	3059	Sisma Y SLV	0	35	0	0	3.5E2	0.591
11065	3059	Sisma X SLD	34.5	0	0	0	3.5E2	0.591	11066	3059	Sisma Y SLD	0	34.5	0	0	3.5E2	0.591
11067	3060	Sisma X SLV	35	0	0	0	3.5E2	0.591	11068	3060	Sisma Y SLV	0	35	0	0	3.5E2	0.591
11069	3060	Sisma X SLD	34.5	0	0	0	3.5E2	0.591	11070	3060	Sisma Y SLD	0	34.5	0	0	3.5E2	0.591
11071	3061	Sisma X SLV	35	0	0	0	3.5E2	0.591	11072	3061	Sisma Y SLV	0	35	0	0	3.5E2	0.591
11073	3061	Sisma X SLD	34.5	0	0	0	3.5E2	0.591	11074	3061	Sisma Y SLD	0	34.5	0	0	3.5E2	0.591
11075	3062	Sisma X SLV	35	0	0	0	3.5E2	0.591	11076	3062	Sisma Y SLV	0	35	0	0	3.5E2	0.591
11077	3062	Sisma X SLD	34.5	0	0	0	3.5E2	0.591	11078	3062	Sisma Y SLD	0	34.5	0	0	3.5E2	0.591
11079	3063	Sisma X SLV	48.3	0	0	0	478.76	0.591	11080	3063	Sisma Y SLV	0	48.3	0	0	478.76	0.591
11081	3063	Sisma X SLD	47.5	0	0	0	478.76	0.591	11082	3063	Sisma Y SLD	0	47.5	0	0	478.76	0.591
11083	3064	Sisma X SLV	49.1	0	0	0	4.9E2	0.591	11084	3064	Sisma Y SLV	0	49.1	0	0	4.9E2	0.591
11085	3064	Sisma X SLD	48.3	0	0	0	4.9E2	0.591	11086	3064	Sisma Y SLD	0	48.3	0	0	4.9E2	0.591
11087	3065	Sisma X SLV	32.9	0	0	0	3.3E2	0.591	11088	3065	Sisma Y SLV	0	32.9	0	0	3.3E2	0.591
11089	3065	Sisma X SLD	32.4	0	0	0	3.3E2	0.591	11090	3065	Sisma Y SLD	0	32.4	0	0	3.3E2	0.591
11091	3066	Sisma X SLV	32.9	0	0	0	3.3E2	0.591	11092	3066	Sisma Y SLV	0	32.9	0	0	3.3E2	0.591
11093	3066	Sisma X SLD	32.4	0	0	0	3.3E2	0.591	11094	3066	Sisma Y SLD	0	32.4	0	0	3.3E2	0.591
11095	3067	Sisma X SLV	32.9	0	0	0	3.3E2	0.591	11096	3067	Sisma Y SLV	0	32.9	0	0	3.3E2	0.591
11097	3067	Sisma X SLD	32.3	0	0	0	3.3E2	0.591	11098	3067	Sisma Y SLD	0	32.3	0	0	3.3E2	0.591
11099	3068	Sisma X SLV	32.8	0	0	0	3.3E2	0.591	11100	3068	Sisma Y SLV	0	32.8	0	0	3.3E2	0.591
11101	3068	Sisma X SLD	32.3	0	0	0	3.3E2	0.591	11102	3068	Sisma Y SLD	0	32.3	0	0	3.3E2	0.591
11103	3069	Sisma X SLV	32.8	0	0	0	3.2E2	0.591	11104	3069	Sisma Y SLV	0	32.8	0	0	3.2E2	0.591
11105	3069	Sisma X SLD	32.3	0	0	0	3.2E2	0.591	11106	3069	Sisma Y SLD	0	32.3	0	0	3.2E2	0.591
11107	3070	Sisma X SLV	32.7	0	0	0	3.2E2	0.591	11108	3070	Sisma Y SLV	0	32.7	0	0	3.2E2	0.591
11109	3070	Sisma X SLD	32.2	0	0	0	3.2E2	0.591	11110	3070	Sisma Y SLD	0	32.2	0	0	3.2E2	0.591
11111	3071	Sisma X SLV	32.6	0	0	0	3.2E2	0.591	11112	3071	Sisma Y SLV	0	32.6	0	0	3.2E2	0.591
11113	3071	Sisma X SLD	32	0	0	0	3.2E2	0.591	11114	3071	Sisma Y SLD	0	32	0	0	3.2E2	0.591
11115	3072	Sisma X SLV	32.5	0	0	0	3.2E2	0.591	11116	3072	Sisma Y SLV	0	32.5	0	0	3.2E2	0.591
11117	3072	Sisma X SLD	31.9	0	0	0	3.2E2	0.591	11118	3072	Sisma Y SLD	0	31.9	0	0	3.2E2	0.591
11119	3073	Sisma X SLV	32.5	0	0	0	3.2E2	0.591	11120	3073	Sisma Y SLV	0	32.5	0	0	3.2E2	0.591
11121	3073	Sisma X SLD	31.9	0	0	0	3.2E2	0.591	11122	3073	Sisma Y SLD	0	31.9	0	0	3.2E2	0.591
11123	3074	Sisma X SLV	32.6	0	0	0	3.2E2	0.591	11124	3074	Sisma Y SLV	0	32.6	0	0	3.2E2	0.591
11125	3074	Sisma X SLD	32.1	0	0	0	3.2E2	0.591	11126	3074	Sisma Y SLD	0	32.1	0	0	3.2E2	0.591
11127	3075	Sisma X SLV	32.8	0	0	0	324.98	0.591	11128	3075	Sisma Y SLV	0	32.8	0	0	324.98	0.591
11129	3075	Sisma X SLD	32.3	0	0	0	324.98	0.591	11130	3075	Sisma Y SLD	0	32.3	0	0	324.98	0.591
11131	3076	Sisma X SLV	36	0	0	0	3.6E2	0.591	11132	3076	Sisma Y SLV	0	36	0	0	3.6E2	0.591
11133	3076	Sisma X SLD	35.5	0	0	0	3.6E2	0.591	11134	3076	Sisma Y SLD	0	35.5	0	0	3.6E2	0.591
11135	3077	Sisma X SLV	42.6	0	0	0	4.2E2	0.591	11136	3077	Sisma Y SLV	0	42.6	0	0	4.2E2	0.591
11137	3077	Sisma X SLD	41.9	0	0	0	4.2E2	0.591	11138	3077	Sisma Y SLD	0	41.9	0	0	4.2E2	0.591
11139	3078	Sisma X SLV	41.8	0	0	0	414.03	0.591	11140	3078	Sisma Y SLV	0	41.8	0	0	414.03	0.591
11141	3078	Sisma X SLD	41.1	0	0	0	414.03	0.591	11142	3078	Sisma Y SLD	0	41.1	0	0	414.03	0.591
11143	3079	Sisma X SLV	36.4	0	0	0	360.66	0.591	11144	3079	Sisma Y SLV	0	36.4	0	0	360.66	0.591
11145	3079	Sisma X SLD	35.8	0	0	0	360.66	0.591	11146	3079	Sisma Y SLD	0	35.8	0	0	360.66	0.591
11147	3080	Sisma X SLV	36.4	0	0	0	3.6E2	0.591	11148	3080	Sisma Y SLV	0	36.4	0	0	3.6E2	0.591
11149	3080	Sisma X SLD	35.8	0	0	0	3.6E2	0.591	11150	3080	Sisma Y SLD	0	35.8	0	0	3.6E2	0.591
11151	3081	Sisma X SLV	36.3	0	0	0	3.6E2	0.591	11152	3081	Sisma Y SLV	0	36.3	0	0	3.6E2	0.591
11153	3081	Sisma X SLD	35.7	0	0	0	3.6E2	0.591	11154	3081	Sisma Y SLD	0	35.7	0	0	3.6E2	0.591
11155	3082	Sisma X SLV	36	0	0	0	3.6E2	0.591	11156	3082	Sisma Y SLV	0	36	0	0	3.6E2	0.591
11157	3082	Sisma X SLD	35.5	0	0	0	3.6E2	0.591	11158	3082	Sisma Y SLD	0	35.5	0	0	3.6E2	0.591
11159	3083	Sisma X SLV	35.6	0	0	0	3.5E2	0.591	11160	3083	Sisma Y SLV	0	35.6	0	0	3.5E2	0.591
11161	3083	Sisma X SLD	35	0	0	0	3.5E2	0.591	11162	3083	Sisma Y SLD	0	35	0	0	3.5E2	0.591
11163	3084	Sisma X SLV	35	0	0	0	346.97	0.591	11164	3084	Sisma Y SLV	0	35	0	0	346.97	0.591
11165	3084	Sisma X SLD	34.4	0	0	0	346.97	0.591	11166	3084	Sisma Y SLD	0	34.4	0	0	346.97	0.591
11167	3085	Sisma X SLV	34.4	0	0	0	3.4E2	0.591	11168	3085	Sisma Y SLV	0	34.4	0	0	3.4E2	0.591
11169	3085	Sisma X SLD	33.8	0	0	0	3.4E2	0.591	11170	3085	Sisma Y SLD	0	33.8	0	0	3.4E2	0.591
11171	3086	Sisma X SLV	34	0	0	0	3.4E2	0.591	11172	3086	Sisma Y SLV	0	34	0	0	3.4E2	0.591
11173	3086	Sisma X SLD	33.4	0	0	0	3.4E2	0.591	11174	3086	Sisma Y SLD	0	33.4	0	0	3.4E2	0.591

Indice	Nodo	Condizione	Fx	Fy	Fz	Mz	Peso	Gamma	Indice	Nodo	Condizione	Fx	Fy	Fz	Mz	Peso	Gamma
11175	3087	Sisma X SLV	33.7	0	0	0	3.3E2	0.591	11176	3087	Sisma Y SLV	0	33.7	0	0	3.3E2	0.591
11177	3087	Sisma X SLD	33.2	0	0	0	3.3E2	0.591	11178	3087	Sisma Y SLD	0	33.2	0	0	3.3E2	0.591
11179	3088	Sisma X SLV	33.6	0	0	0	3.3E2	0.591	11180	3088	Sisma Y SLV	0	33.6	0	0	3.3E2	0.591
11181	3088	Sisma X SLD	33.1	0	0	0	3.3E2	0.591	11182	3088	Sisma Y SLD	0	33.1	0	0	3.3E2	0.591
11183	3089	Sisma X SLV	29.4	0	0	0	2.9E2	0.591	11184	3089	Sisma Y SLV	0	29.4	0	0	2.9E2	0.591
11185	3089	Sisma X SLD	28.9	0	0	0	2.9E2	0.591	11186	3089	Sisma Y SLD	0	28.9	0	0	2.9E2	0.591
11187	3090	Sisma X SLV	27.9	0	0	0	2.8E2	0.591	11188	3090	Sisma Y SLV	0	27.9	0	0	2.8E2	0.591
11189	3090	Sisma X SLD	27.4	0	0	0	2.8E2	0.591	11190	3090	Sisma Y SLD	0	27.4	0	0	2.8E2	0.591
11191	3091	Sisma X SLV	46.3	0	0	0	4.6E2	0.591	11192	3091	Sisma Y SLV	0	46.3	0	0	4.6E2	0.591
11193	3091	Sisma X SLD	45.6	0	0	0	4.6E2	0.591	11194	3091	Sisma Y SLD	0	45.6	0	0	4.6E2	0.591
11195	3092	Sisma X SLV	47	0	0	0	465.7	0.591	11196	3092	Sisma Y SLV	0	47	0	0	465.7	0.591
11197	3092	Sisma X SLD	46.2	0	0	0	465.7	0.591	11198	3092	Sisma Y SLD	0	46.2	0	0	465.7	0.591
11199	3093	Sisma X SLV	28.8	0	0	0	2.9E2	0.591	11200	3093	Sisma Y SLV	0	28.8	0	0	2.9E2	0.591
11201	3093	Sisma X SLD	28.4	0	0	0	2.9E2	0.591	11202	3093	Sisma Y SLD	0	28.4	0	0	2.9E2	0.591
11203	3094	Sisma X SLV	14.7	0	0	0	1.5E2	0.592	11204	3094	Sisma Y SLV	0	14.7	0	0	1.5E2	0.592
11205	3094	Sisma X SLD	14.5	0	0	0	1.5E2	0.592	11206	3094	Sisma Y SLD	0	14.5	0	0	1.5E2	0.592
11207	3095	Sisma X SLV	14.7	0	0	0	1.5E2	0.592	11208	3095	Sisma Y SLV	0	14.7	0	0	1.5E2	0.592
11209	3095	Sisma X SLD	14.5	0	0	0	1.5E2	0.592	11210	3095	Sisma Y SLD	0	14.5	0	0	1.5E2	0.592
11211	3096	Sisma X SLV	15.5	0	0	0	153.55	0.592	11212	3096	Sisma Y SLV	0	15.5	0	0	153.55	0.592
11213	3096	Sisma X SLD	15.3	0	0	0	153.55	0.592	11214	3096	Sisma Y SLD	0	15.3	0	0	153.55	0.592
11215	3097	Sisma X SLV	14.9	0	0	0	147.82	0.592	11216	3097	Sisma Y SLV	0	14.9	0	0	147.82	0.592
11217	3097	Sisma X SLD	14.7	0	0	0	147.82	0.592	11218	3097	Sisma Y SLD	0	14.7	0	0	147.82	0.592
11219	3098	Sisma X SLV	14.9	0	0	0	147.82	0.592	11220	3098	Sisma Y SLV	0	14.9	0	0	147.82	0.592
11221	3098	Sisma X SLD	14.7	0	0	0	147.82	0.592	11222	3098	Sisma Y SLD	0	14.7	0	0	147.82	0.592
11223	3099	Sisma X SLV	28.2	0	0	0	279.04	0.592	11224	3099	Sisma Y SLV	0	28.2	0	0	279.04	0.592
11225	3099	Sisma X SLD	27.8	0	0	0	279.04	0.592	11226	3099	Sisma Y SLD	0	27.8	0	0	279.04	0.592
11227	3100	Sisma X SLV	16.2	0	0	0	1.6E2	0.593	11228	3100	Sisma Y SLV	0	16.2	0	0	1.6E2	0.593
11229	3100	Sisma X SLD	15.9	0	0	0	1.6E2	0.593	11230	3100	Sisma Y SLD	0	15.9	0	0	1.6E2	0.593
11231	3101	Sisma X SLV	32.4	0	0	0	3.2E2	0.593	11232	3101	Sisma Y SLV	0	32.4	0	0	3.2E2	0.593
11233	3101	Sisma X SLD	31.8	0	0	0	3.2E2	0.593	11234	3101	Sisma Y SLD	0	31.8	0	0	3.2E2	0.593
11235	3102	Sisma X SLV	15.3	0	0	0	1.5E2	0.593	11236	3102	Sisma Y SLV	0	15.3	0	0	1.5E2	0.593
11237	3102	Sisma X SLD	15	0	0	0	1.5E2	0.593	11238	3102	Sisma Y SLD	0	15	0	0	1.5E2	0.593
11239	3103	Sisma X SLV	31.4	0	0	0	3.1E2	0.593	11240	3103	Sisma Y SLV	0	31.4	0	0	3.1E2	0.593
11241	3103	Sisma X SLD	30.9	0	0	0	3.1E2	0.593	11242	3103	Sisma Y SLD	0	30.9	0	0	3.1E2	0.593
11243	3104	Sisma X SLV	14.9	0	0	0	1.5E2	0.593	11244	3104	Sisma Y SLV	0	14.9	0	0	1.5E2	0.593
11245	3104	Sisma X SLD	14.6	0	0	0	1.5E2	0.593	11246	3104	Sisma Y SLD	0	14.6	0	0	1.5E2	0.593
11247	3105	Sisma X SLV	14.9	0	0	0	1.5E2	0.593	11248	3105	Sisma Y SLV	0	14.9	0	0	1.5E2	0.593
11249	3105	Sisma X SLD	14.6	0	0	0	1.5E2	0.593	11250	3105	Sisma Y SLD	0	14.6	0	0	1.5E2	0.593
11251	3106	Sisma X SLV	34.1	0	0	0	3.4E2	0.593	11252	3106	Sisma Y SLV	0	34.1	0	0	3.4E2	0.593
11253	3106	Sisma X SLD	33.6	0	0	0	3.4E2	0.593	11254	3106	Sisma Y SLD	0	33.6	0	0	3.4E2	0.593
11255	3107	Sisma X SLV	28.1	0	0	0	2.8E2	0.594	11256	3107	Sisma Y SLV	0	28.1	0	0	2.8E2	0.594
11257	3107	Sisma X SLD	27.6	0	0	0	2.8E2	0.594	11258	3107	Sisma Y SLD	0	27.6	0	0	2.8E2	0.594
11259	3108	Sisma X SLV	16.1	0	0	0	1.6E2	0.594	11260	3108	Sisma Y SLV	0	16.1	0	0	1.6E2	0.594
11261	3108	Sisma X SLD	15.8	0	0	0	1.6E2	0.594	11262	3108	Sisma Y SLD	0	15.8	0	0	1.6E2	0.594
11263	3109	Sisma X SLV	16.6	0	0	0	1.6E2	0.594	11264	3109	Sisma Y SLV	0	16.6	0	0	1.6E2	0.594
11265	3109	Sisma X SLD	16.3	0	0	0	1.6E2	0.594	11266	3109	Sisma Y SLD	0	16.3	0	0	1.6E2	0.594
11267	3110	Sisma X SLV	30.7	0	0	0	3.0E2	0.594	11268	3110	Sisma Y SLV	0	30.7	0	0	3.0E2	0.594
11269	3110	Sisma X SLD	30.2	0	0	0	3.0E2	0.594	11270	3110	Sisma Y SLD	0	30.2	0	0	3.0E2	0.594
11271	3111	Sisma X SLV	14.8	0	0	0	1.5E2	0.594	11272	3111	Sisma Y SLV	0	14.8	0	0	1.5E2	0.594
11273	3111	Sisma X SLD	14.6	0	0	0	1.5E2	0.594	11274	3111	Sisma Y SLD	0	14.6	0	0	1.5E2	0.594
11275	3112	Sisma X SLV	14.8	0	0	0	1.5E2	0.594	11276	3112	Sisma Y SLV	0	14.8	0	0	1.5E2	0.594
11277	3112	Sisma X SLD	14.6	0	0	0	1.5E2	0.594	11278	3112	Sisma Y SLD	0	14.6	0	0	1.5E2	0.594
11279	3113	Sisma X SLV	8.6	0	0	0	84.397	0.594	11280	3113	Sisma Y SLV	0	8.6	0	0	84.397	0.594
11281	3113	Sisma X SLD	8.4	0	0	0	84.397	0.594	11282	3113	Sisma Y SLD	0	8.4	0	0	84.397	0.594
11283	3114	Sisma X SLV	32	0	0	0	315.26	0.595	11284	3114	Sisma Y SLV	0	32	0	0	315.26	0.595
11285	3114	Sisma X SLD	31.5	0	0	0	315.26	0.595	11286	3114	Sisma Y SLD	0	31.5	0	0	315.26	0.595
11287	3115	Sisma X SLV	15.2	0	0	0	1.5E2	0.595	11288	3115	Sisma Y SLV	0	15.2	0	0	1.5E2	0.595
11289	3115	Sisma X SLD	14.9	0	0	0	1.5E2	0.595	11290	3115	Sisma Y SLD	0	14.9	0	0	1.5E2	0.595
11291	3116	Sisma X SLV	27.9	0	0	0	2.8E2	0.595	11292	3116	Sisma Y SLV	0	27.9	0	0	2.8E2	0.595
11293	3116	Sisma X SLD	27.5	0	0	0	2.8E2	0.595	11294	3116	Sisma Y SLD	0	27.5	0	0	2.8E2	0.595
11295	3117	Sisma X SLV	31	0	0	0	3.1E2	0.595	11296	3117	Sisma Y SLV	0	31	0	0	3.1E2	0.595
11297	3117	Sisma X SLD	30.5	0	0	0	3.1E2	0.595	11298	3117	Sisma Y SLD	0	30.5	0	0	3.1E2	0.595
11299	3118	Sisma X SLV	28.8	0	0	0	2.8E2	0.595	11300	3118	Sisma Y SLV	0	28.8	0	0	2.8E2	0.595
11301	3118	Sisma X SLD	28.3	0	0	0	2.8E2	0.595	11302	3118	Sisma Y SLD	0	28.3	0	0	2.8E2	0.595
11303	3119	Sisma X SLV	16.8	0	0	0	164.9	0.595	11304	3119	Sisma Y SLV	0	16.8	0	0	164.9	0.595
11305	3119	Sisma X SLD	16.5	0	0	0	164.9	0.595	11306	3119	Sisma Y SLD	0	16.5	0	0	164.9	0.595
11307	3120	Sisma X SLV	14.7	0	0	0	1.4E2	0.596	11308	3120	Sisma Y SLV	0	14.7	0	0	1.4E2	0.596
11309	3120	Sisma X SLD	14.5	0	0	0	1.4E2	0.596	11310	3120	Sisma Y SLD	0	14.5	0	0	1.4E2	0.596
11311	3121	Sisma X SLV	14.7	0	0	0	1.4E2	0.596	11312	3121	Sisma Y SLV	0	14.7	0	0	1.4E2	0.596
11313	3121	Sisma X SLD	14.5	0	0	0	1.4E2	0.596	11314	3121	Sisma Y SLD	0	14.5	0	0	1.4E2	0.596
11315	3122	Sisma X SLV	15.9	0	0	0	1.6E2	0.596	11316	3122	Sisma Y SLV	0	15.9	0	0	1.6E2	0.596
11317	3122	Sisma X SLD	15.7	0	0	0	1.6E2	0.596	11318	3122	Sisma Y SLD	0	15.7	0	0	1.6E2	0.596
11319	3123	Sisma X SLV	33.9	0	0	0	3.3E2	0.596	11320	3123	Sisma Y SLV	0	33.9	0	0	3.3E2	0.596
11321	3123	Sisma X SLD	33.4	0	0	0	3.3E2	0.596	11322	3123	Sisma Y SLD	0	33.4	0	0	3.3E2	0.596
11323	3124	Sisma X SLV	12.4	0	0	0	1.2E2	0.596	11324	3124	Sisma Y SLV	0	12.4	0	0	1.2E2	0.596
11325	3124	Sisma X SLD	12.2	0	0	0	1.2E2	0.596	11326	3124	Sisma Y SLD	0	12.2	0	0	1.2E2	0.596
11327	3125	Sisma X SLV	27.8	0	0	0	2.7E2	0.596	11328	3125	Sisma Y SLV	0	27.8	0	0	2.7E2	0.596
11329	3125	Sisma X SLD	27.3	0	0	0	2.7E2	0.596	11330	3125	Sisma Y SLD	0	27.3	0	0	2.7E2	0.596
11331	3126	Sisma X SLV	31.6	0	0	0	310.5	0.597	11332	3126	Sisma Y SLV	0	31.6	0	0	310.5	0.597
11333	3126	Sisma X SLD	31.1	0	0	0	310.5	0.597	11334	3126	Sisma Y SLD	0	31.1	0	0	310.5	0.597
11335	3127	Sisma X SLV	15	0	0	0	1.5E2	0.597	11336	3127	Sisma Y SLV	0	15	0	0	1.5E2	0.597
11337	3127	Sisma X SLD	14.8	0	0	0	1.5E2	0.597	11338	3127	Sisma Y SLD	0	14.8	0	0	1.5E2	0.597
11339	3128	Sisma X SLV	30.3	0	0	0	3.0E2	0.597	11340	3128	Sisma Y SLV	0	30.3	0	0	3.0E2	0.597
11341	3128	Sisma X SLD	29.8	0	0	0	3.0E2	0.597	11342	3128	Sisma Y SLD	0	29.8	0	0	3.0E2	0.597
11343	3129	Sisma X SLV	14.6	0	0	0	1.4E2	0.597	11344	3129	Sisma Y SLV	0	14.6	0	0	1.4E2	0.597
11345	3129	Sisma X SLD	14.4	0	0	0	1.4E2	0.597	11346	3129	Sisma Y SLD	0	14.4	0	0	1.4E2	0.597
11347	3130	Sisma X SLV	14.6	0	0	0	1.4E2	0.597	11348	3130	Sisma Y SLV	0	14.6	0	0	1.4E2	0.597
11349	3130	Sisma X SLD	14.4	0	0	0	1.4E2	0.597	11350	3130	Sisma Y SLD	0	14.4	0	0	1.4E2	0.597
11351	3131	Sisma X SLV	16.3	0	0	0	1.6E2	0.597	11352	3131	Sisma Y SLV	0	16.3	0	0	1.6E2	0.597
11353	3131	Sisma X SLD	16	0	0	0	1.6E2	0.597	11354	3131	Sisma Y SLD	0	16	0	0	1.6E2	0.597
11355	3132	Sisma X SLV	29.4	0	0	0	2.9E2	0.597	11356	3132	Sisma Y SLV	0	29.4	0	0	2.9E2	0.597
11357	3132	Sisma X SLD	29	0	0	0	2.9E2	0.597	11358	3132	Sisma Y SLD	0	29	0	0	2.9E2	0.597
11359	3133	Sisma X SLV	31.7	0	0	0	310.95	0.598	11360	3133	Sisma Y SLV	0	31.7	0	0	310.95	0.598
11361	3133	Sisma X SLD	31.2	0	0	0	310.95	0.598	11362	3133	Sisma Y SLD	0	31.2	0	0	310.95	0.598
11363	3134	Sisma X SLV	35	0	0	0	3.4E2	0.598	11364	3134	Sisma Y SLV	0	35	0	0	3.4E2	0.598
11365	3134	Sisma X SLD	34.5	0	0	0	3.4E2	0.598	11366	3134	Sisma Y SLD	0	34.5	0	0	3.4E2	0.598
11367	3135	Sisma X SLV	32.9	0	0	0	3.2E2	0.598	11368	3135	Sisma Y SLV	0	32.9	0	0	3.2E2	0.598
11369	3135	Sisma X SLD	32.3	0	0	0	3.2E2	0.598	11370	3135	Sisma Y SLD	0	32.3	0	0	3.2E2	0.598
11371	3136	Sisma X SLV	27.4	0	0	0	2.7E2	0.598	11372	3136	Sisma Y SLV	0	27.4	0	0	2.7E2	0.598
11373	3136	Sisma X SLD	26.9	0	0	0	2.7E2	0.598	11374	3136	Sisma Y SLD	0	26.9	0	0	2.7E2	0.598
11375	3137	Sisma X SLV	15.7	0	0	0	1.5E2	0.598	11376	3137	Sisma Y SLV	0	15.7	0	0	1.5E2	0.598
11377	3137	Sisma X SLD	15.4	0	0	0	1.5E2	0.598	11378	3137	Sisma Y SLD	0	15.4	0	0	1.5E2	0.598
11379	3138	Sisma X SLV	27.5	0	0	0	2.7E2	0.598	11380	3138	Sisma Y SLV	0	27.5	0	0	2.7E2	0.598
11381	3138	Sisma X SLD	27.1	0	0	0	2.7E2	0.598	11382	3138	Sisma Y SLD	0	27.1	0	0	2.7E2	0.598

muratura

Indice	Nodo	Condizione	Fx	Fy	Fz	Mz	Peso	Gamma	Indice	Nodo	Condizione	Fx	Fy	Fz	Mz	Peso	Gamma
11383	3139	Sisma X SLV	33.7	0	0	0	3.3E2	0.598	11384	3139	Sisma Y SLV	0	33.7	0	0	3.3E2	0.598
11385	3139	Sisma X SLD	33.1	0	0	0	3.3E2	0.598	11386	3139	Sisma Y SLD	0	33.1	0	0	3.3E2	0.598
11387	3140	Sisma X SLV	14.1	0	0	0	1.4E2	0.599	11388	3140	Sisma Y SLV	0	14.1	0	0	1.4E2	0.599
11389	3140	Sisma X SLD	13.9	0	0	0	1.4E2	0.599	11390	3140	Sisma Y SLD	0	13.9	0	0	1.4E2	0.599
11391	3141	Sisma X SLV	14.1	0	0	0	1.4E2	0.599	11392	3141	Sisma Y SLV	0	14.1	0	0	1.4E2	0.599
11393	3141	Sisma X SLD	13.9	0	0	0	1.4E2	0.599	11394	3141	Sisma Y SLD	0	13.9	0	0	1.4E2	0.599
11395	3142	Sisma X SLV	28.3	0	0	0	2.8E2	0.599	11396	3142	Sisma Y SLV	0	28.3	0	0	2.8E2	0.599
11397	3142	Sisma X SLD	27.8	0	0	0	2.8E2	0.599	11398	3142	Sisma Y SLD	0	27.8	0	0	2.8E2	0.599
11399	3143	Sisma X SLV	14.4	0	0	0	1.4E2	0.599	11400	3143	Sisma Y SLV	0	14.4	0	0	1.4E2	0.599
11401	3143	Sisma X SLD	14.2	0	0	0	1.4E2	0.599	11402	3143	Sisma Y SLD	0	14.2	0	0	1.4E2	0.599
11403	3144	Sisma X SLV	14.4	0	0	0	1.4E2	0.599	11404	3144	Sisma Y SLV	0	14.4	0	0	1.4E2	0.599
11405	3144	Sisma X SLD	14.2	0	0	0	1.4E2	0.599	11406	3144	Sisma Y SLD	0	14.2	0	0	1.4E2	0.599
11407	3145	Sisma X SLV	31.2	0	0	0	3.1E2	0.599	11408	3145	Sisma Y SLV	0	31.2	0	0	3.1E2	0.599
11409	3145	Sisma X SLD	30.7	0	0	0	3.1E2	0.599	11410	3145	Sisma Y SLD	0	30.7	0	0	3.1E2	0.599
11411	3146	Sisma X SLV	14.9	0	0	0	1.5E2	0.599	11412	3146	Sisma Y SLV	0	14.9	0	0	1.5E2	0.599
11413	3146	Sisma X SLD	14.6	0	0	0	1.5E2	0.599	11414	3146	Sisma Y SLD	0	14.6	0	0	1.5E2	0.599
11415	3147	Sisma X SLV	29.2	0	0	0	2.9E2	0.599	11416	3147	Sisma Y SLV	0	29.2	0	0	2.9E2	0.599
11417	3147	Sisma X SLD	28.7	0	0	0	2.9E2	0.599	11418	3147	Sisma Y SLD	0	28.7	0	0	2.9E2	0.599
11419	3148	Sisma X SLV	15.3	0	0	0	1.5E2	0.6	11420	3148	Sisma Y SLV	0	15.3	0	0	1.5E2	0.6
11421	3148	Sisma X SLD	15.1	0	0	0	1.5E2	0.6	11422	3148	Sisma Y SLD	0	15.1	0	0	1.5E2	0.6
11423	3149	Sisma X SLV	27.3	0	0	0	2.7E2	0.6	11424	3149	Sisma Y SLV	0	27.3	0	0	2.7E2	0.6
11425	3149	Sisma X SLD	26.8	0	0	0	2.7E2	0.6	11426	3149	Sisma Y SLD	0	26.8	0	0	2.7E2	0.6
11427	3150	Sisma X SLV	15.9	0	0	0	1.5E2	0.601	11428	3150	Sisma Y SLV	0	15.9	0	0	1.5E2	0.601
11429	3150	Sisma X SLD	15.6	0	0	0	1.5E2	0.601	11430	3150	Sisma Y SLD	0	15.6	0	0	1.5E2	0.601
11431	3151	Sisma X SLV	28.4	0	0	0	2.8E2	0.601	11432	3151	Sisma Y SLV	0	28.4	0	0	2.8E2	0.601
11433	3151	Sisma X SLD	27.9	0	0	0	2.8E2	0.601	11434	3151	Sisma Y SLD	0	27.9	0	0	2.8E2	0.601
11435	3152	Sisma X SLV	4.9	0	0	0	47.67	0.601	11436	3152	Sisma Y SLV	0	4.9	0	0	47.67	0.601
11437	3152	Sisma X SLD	4.8	0	0	0	47.67	0.601	11438	3152	Sisma Y SLD	0	4.8	0	0	47.67	0.601
11439	3153	Sisma X SLV	12.1	0	0	0	1.2E2	0.601	11440	3153	Sisma Y SLV	0	12.1	0	0	1.2E2	0.601
11441	3153	Sisma X SLD	11.9	0	0	0	1.2E2	0.601	11442	3153	Sisma Y SLD	0	11.9	0	0	1.2E2	0.601
11443	3154	Sisma X SLV	33.3	0	0	0	3.2E2	0.601	11444	3154	Sisma Y SLV	0	33.3	0	0	3.2E2	0.601
11445	3154	Sisma X SLD	32.8	0	0	0	3.2E2	0.601	11446	3154	Sisma Y SLD	0	32.8	0	0	3.2E2	0.601
11447	3155	Sisma X SLV	14.2	0	0	0	1.4E2	0.601	11448	3155	Sisma Y SLV	0	14.2	0	0	1.4E2	0.601
11449	3155	Sisma X SLD	14	0	0	0	1.4E2	0.601	11450	3155	Sisma Y SLD	0	14	0	0	1.4E2	0.601
11451	3156	Sisma X SLV	14.2	0	0	0	1.4E2	0.601	11452	3156	Sisma Y SLV	0	14.2	0	0	1.4E2	0.601
11453	3156	Sisma X SLD	14	0	0	0	1.4E2	0.601	11454	3156	Sisma Y SLD	0	14	0	0	1.4E2	0.601
11455	3157	Sisma X SLV	30.7	0	0	0	3.0E2	0.602	11456	3157	Sisma Y SLV	0	30.7	0	0	3.0E2	0.602
11457	3157	Sisma X SLD	30.2	0	0	0	3.0E2	0.602	11458	3157	Sisma Y SLD	0	30.2	0	0	3.0E2	0.602
11459	3158	Sisma X SLV	14.7	0	0	0	1.4E2	0.602	11460	3158	Sisma Y SLV	0	14.7	0	0	1.4E2	0.602
11461	3158	Sisma X SLD	14.4	0	0	0	1.4E2	0.602	11462	3158	Sisma Y SLD	0	14.4	0	0	1.4E2	0.602
11463	3159	Sisma X SLV	6.8	0	0	0	65.933	0.602	11464	3159	Sisma Y SLV	0	6.8	0	0	65.933	0.602
11465	3159	Sisma X SLD	6.7	0	0	0	65.933	0.602	11466	3159	Sisma Y SLD	0	6.7	0	0	65.933	0.602
11467	3160	Sisma X SLV	27.9	0	0	0	2.7E2	0.602	11468	3160	Sisma Y SLV	0	27.9	0	0	2.7E2	0.602
11469	3160	Sisma X SLD	27.5	0	0	0	2.7E2	0.602	11470	3160	Sisma Y SLD	0	27.5	0	0	2.7E2	0.602
11471	3161	Sisma X SLV	14.8	0	0	0	1.4E2	0.602	11472	3161	Sisma Y SLV	0	14.8	0	0	1.4E2	0.602
11473	3161	Sisma X SLD	14.6	0	0	0	1.4E2	0.602	11474	3161	Sisma Y SLD	0	14.6	0	0	1.4E2	0.602
11475	3162	Sisma X SLV	26.9	0	0	0	2.6E2	0.603	11476	3162	Sisma Y SLV	0	26.9	0	0	2.6E2	0.603
11477	3162	Sisma X SLD	26.4	0	0	0	2.6E2	0.603	11478	3162	Sisma Y SLD	0	26.4	0	0	2.6E2	0.603
11479	3163	Sisma X SLV	27.8	0	0	0	2.7E2	0.603	11480	3163	Sisma Y SLV	0	27.8	0	0	2.7E2	0.603
11481	3163	Sisma X SLD	27.3	0	0	0	2.7E2	0.603	11482	3163	Sisma Y SLD	0	27.3	0	0	2.7E2	0.603
11483	3164	Sisma X SLV	29.9	0	0	0	290.2	0.603	11484	3164	Sisma Y SLV	0	29.9	0	0	290.2	0.603
11485	3164	Sisma X SLD	29.4	0	0	0	290.2	0.603	11486	3164	Sisma Y SLD	0	29.4	0	0	290.2	0.603
11487	3165	Sisma X SLV	33.3	0	0	0	3.2E2	0.603	11488	3165	Sisma Y SLV	0	33.3	0	0	3.2E2	0.603
11489	3165	Sisma X SLD	32.8	0	0	0	3.2E2	0.603	11490	3165	Sisma Y SLD	0	32.8	0	0	3.2E2	0.603
11491	3166	Sisma X SLV	31.1	0	0	0	3.0E2	0.603	11492	3166	Sisma Y SLV	0	31.1	0	0	3.0E2	0.603
11493	3166	Sisma X SLD	30.6	0	0	0	3.0E2	0.603	11494	3166	Sisma Y SLD	0	30.6	0	0	3.0E2	0.603
11495	3167	Sisma X SLV	26.4	0	0	0	2.6E2	0.603	11496	3167	Sisma Y SLV	0	26.4	0	0	2.6E2	0.603
11497	3167	Sisma X SLD	26	0	0	0	2.6E2	0.603	11498	3167	Sisma Y SLD	0	26	0	0	2.6E2	0.603
11499	3168	Sisma X SLV	13.8	0	0	0	1.3E2	0.603	11500	3168	Sisma Y SLV	0	13.8	0	0	1.3E2	0.603
11501	3168	Sisma X SLD	13.5	0	0	0	1.3E2	0.603	11502	3168	Sisma Y SLD	0	13.5	0	0	1.3E2	0.603
11503	3169	Sisma X SLV	13.8	0	0	0	1.3E2	0.603	11504	3169	Sisma Y SLV	0	13.8	0	0	1.3E2	0.603
11505	3169	Sisma X SLD	13.5	0	0	0	1.3E2	0.603	11506	3169	Sisma Y SLD	0	13.5	0	0	1.3E2	0.603
11507	3170	Sisma X SLV	15.6	0	0	0	1.5E2	0.604	11508	3170	Sisma Y SLV	0	15.6	0	0	1.5E2	0.604
11509	3170	Sisma X SLD	15.3	0	0	0	1.5E2	0.604	11510	3170	Sisma Y SLD	0	15.3	0	0	1.5E2	0.604
11511	3171	Sisma X SLV	14	0	0	0	1.4E2	0.604	11512	3171	Sisma Y SLV	0	14	0	0	1.4E2	0.604
11513	3171	Sisma X SLD	13.8	0	0	0	1.4E2	0.604	11514	3171	Sisma Y SLD	0	13.8	0	0	1.4E2	0.604
11515	3172	Sisma X SLV	14	0	0	0	1.4E2	0.604	11516	3172	Sisma Y SLV	0	14	0	0	1.4E2	0.604
11517	3172	Sisma X SLD	13.8	0	0	0	1.4E2	0.604	11518	3172	Sisma Y SLD	0	13.8	0	0	1.4E2	0.604
11519	3173	Sisma X SLV	15.4	0	0	0	1.5E2	0.604	11520	3173	Sisma Y SLV	0	15.4	0	0	1.5E2	0.604
11521	3173	Sisma X SLD	15.1	0	0	0	1.5E2	0.604	11522	3173	Sisma Y SLD	0	15.1	0	0	1.5E2	0.604
11523	3174	Sisma X SLV	27.5	0	0	0	2.7E2	0.604	11524	3174	Sisma Y SLV	0	27.5	0	0	2.7E2	0.604
11525	3174	Sisma X SLD	27	0	0	0	2.7E2	0.604	11526	3174	Sisma Y SLD	0	27	0	0	2.7E2	0.604
11527	3175	Sisma X SLV	32.8	0	0	0	3.2E2	0.604	11528	3175	Sisma Y SLV	0	32.8	0	0	3.2E2	0.604
11529	3175	Sisma X SLD	32.3	0	0	0	3.2E2	0.604	11530	3175	Sisma Y SLD	0	32.3	0	0	3.2E2	0.604
11531	3176	Sisma X SLV	30.1	0	0	0	2.9E2	0.605	11532	3176	Sisma Y SLV	0	30.1	0	0	2.9E2	0.605
11533	3176	Sisma X SLD	29.6	0	0	0	2.9E2	0.605	11534	3176	Sisma Y SLD	0	29.6	0	0	2.9E2	0.605
11535	3177	Sisma X SLV	14.4	0	0	0	1.4E2	0.605	11536	3177	Sisma Y SLV	0	14.4	0	0	1.4E2	0.605
11537	3177	Sisma X SLD	14.2	0	0	0	1.4E2	0.605	11538	3177	Sisma Y SLD	0	14.2	0	0	1.4E2	0.605
11539	3178	Sisma X SLV	26.9	0	0	0	260.28	0.605	11540	3178	Sisma Y SLV	0	26.9	0	0	260.28	0.605
11541	3178	Sisma X SLD	26.4	0	0	0	260.28	0.605	11542	3178	Sisma Y SLD	0	26.4	0	0	260.28	0.605
11543	3179	Sisma X SLV	14.2	0	0	0	1.4E2	0.605	11544	3179	Sisma Y SLV	0	14.2	0	0	1.4E2	0.605
11545	3179	Sisma X SLD	13.9	0	0	0	1.4E2	0.605	11546	3179	Sisma Y SLD	0	13.9	0	0	1.4E2	0.605
11547	3180	Sisma X SLV	26.4	0	0	0	2.6E2	0.605	11548	3180	Sisma Y SLV	0	26.4	0	0	2.6E2	0.605
11549	3180	Sisma X SLD	26	0	0	0	2.6E2	0.605	11550	3180	Sisma Y SLD	0	26	0	0	2.6E2	0.605
11551	3181	Sisma X SLV	12.1	0	0	0	1.2E2	0.605	11552	3181	Sisma Y SLV	0	12.1	0	0	1.2E2	0.605
11553	3181	Sisma X SLD	11.9	0	0	0	1.2E2	0.605	11554	3181	Sisma Y SLD	0	11.9	0	0	1.2E2	0.605
11555	3182	Sisma X SLV	13.7	0	0	0	1.3E2	0.605	11556	3182	Sisma Y SLV	0	13.7	0	0	1.3E2	0.605
11557	3182	Sisma X SLD	13.5	0	0	0	1.3E2	0.605	11558	3182	Sisma Y SLD	0	13.5	0	0	1.3E2	0.605
11559	3183	Sisma X SLV	13.7	0	0	0	1.3E2	0.605	11560	3183	Sisma Y SLV	0	13.7	0	0	1.3E2	0.605
11561	3183	Sisma X SLD	13.5	0	0	0	1.3E2	0.605	11562	3183	Sisma Y SLD	0	13.5	0	0	1.3E2	0.605
11563	3184	Sisma X SLV	13.7	0	0	0	1.3E2	0.605	11564	3184	Sisma Y SLV	0	13.7	0	0	1.3E2	0.605
11565	3184	Sisma X SLD	13.5	0	0	0	1.3E2	0.605	11566	3184	Sisma Y SLD	0	13.5	0	0	1.3E2	0.605
11567	3185	Sisma X SLV	13.7	0	0	0	1.3E2	0.605	11568	3185	Sisma Y SLV	0	13.7	0	0	1.3E2	0.605
11569	3185	Sisma X SLD	13.5	0	0	0	1.3E2	0.605	11570	3185	Sisma Y SLD	0	13.5	0	0	1.3E2	0.605
11571	3186	Sisma X SLV	27.4	0	0	0	2.7E2	0.606	11572	3186	Sisma Y SLV	0	27.4	0	0	2.7E2	0.606
11573	3186	Sisma X SLD	27	0	0	0	2.7E2	0.606	11574	3186	Sisma Y SLD	0	27	0	0	2.7E2	0.606
11575	3187	Sisma X SLV	28.4	0	0	0	2.7E2	0.606	11576	3187	Sisma Y SLV	0	28.4	0	0	2.7E2	0.606
11577	3187	Sisma X SLD	28	0	0	0	2.7E2	0.606	11578	3187	Sisma Y SLD	0	28	0	0	2.7E2	0.606
11579	3188	Sisma X SLV	32.1	0	0	0	3.1E2	0.606	11580	3188	Sisma Y SLV	0	32.1	0	0	3.1E2	0.606
11581	3188	Sisma X SLD	31.6	0	0	0	3.1E2	0.606	11582	3188	Sisma Y SLD	0	31.6	0	0	3.1E2	0.606
11583	3189	Sisma X SLV	29.9	0	0	0	2.9E2	0.606	11584	3189	Sisma Y SLV	0	29.9	0	0	2.9E2	0.606

Indice	Nodo	Condizione	Fx	Fy	Fz	Mz	Peso	Gamma	Indice	Nodo	Condizione	Fx	Fy	Fz	Mz	Peso	Gamma
11585	3189	Sisma X SLD	29.4	0	0	0	2.9E2	0.606	11586	3189	Sisma Y SLD	0	29.4	0	0	2.9E2	0.606
11587	3190	Sisma X SLV	26	0	0	0	2.5E2	0.606	11588	3190	Sisma Y SLV	0	26	0	0	2.5E2	0.606
11589	3190	Sisma X SLD	25.5	0	0	0	2.5E2	0.606	11590	3190	Sisma Y SLD	0	25.5	0	0	2.5E2	0.606
11591	3191	Sisma X SLV	32.1	0	0	0	3.1E2	0.606	11592	3191	Sisma Y SLV	0	32.1	0	0	3.1E2	0.606
11593	3191	Sisma X SLD	31.6	0	0	0	3.1E2	0.606	11594	3191	Sisma Y SLD	0	31.6	0	0	3.1E2	0.606
11595	3192	Sisma X SLV	29.5	0	0	0	2.9E2	0.607	11596	3192	Sisma Y SLV	0	29.5	0	0	2.9E2	0.607
11597	3192	Sisma X SLD	29.1	0	0	0	2.9E2	0.607	11598	3192	Sisma Y SLD	0	29.1	0	0	2.9E2	0.607
11599	3193	Sisma X SLV	14.8	0	0	0	1.4E2	0.607	11600	3193	Sisma Y SLV	0	14.8	0	0	1.4E2	0.607
11601	3193	Sisma X SLD	14.6	0	0	0	1.4E2	0.607	11602	3193	Sisma Y SLD	0	14.6	0	0	1.4E2	0.607
11603	3194	Sisma X SLV	26.7	0	0	0	258.03	0.607	11604	3194	Sisma Y SLV	0	26.7	0	0	258.03	0.607
11605	3194	Sisma X SLD	26.3	0	0	0	258.03	0.607	11606	3194	Sisma Y SLD	0	26.3	0	0	258.03	0.607
11607	3195	Sisma X SLV	27.6	0	0	0	2.7E2	0.607	11608	3195	Sisma Y SLV	0	27.6	0	0	2.7E2	0.607
11609	3195	Sisma X SLD	27.2	0	0	0	2.7E2	0.607	11610	3195	Sisma Y SLD	0	27.2	0	0	2.7E2	0.607
11611	3196	Sisma X SLV	26	0	0	0	2.5E2	0.607	11612	3196	Sisma Y SLV	0	26	0	0	2.5E2	0.607
11613	3196	Sisma X SLD	25.6	0	0	0	2.5E2	0.607	11614	3196	Sisma Y SLD	0	25.6	0	0	2.5E2	0.607
11615	3197	Sisma X SLV	31.8	0	0	0	3.1E2	0.607	11616	3197	Sisma Y SLV	0	31.8	0	0	3.1E2	0.607
11617	3197	Sisma X SLD	31.3	0	0	0	3.1E2	0.607	11618	3197	Sisma Y SLD	0	31.3	0	0	3.1E2	0.607
11619	3198	Sisma X SLV	13.4	0	0	0	1.3E2	0.607	11620	3198	Sisma Y SLV	0	13.4	0	0	1.3E2	0.607
11621	3198	Sisma X SLD	13.2	0	0	0	1.3E2	0.607	11622	3198	Sisma Y SLD	0	13.2	0	0	1.3E2	0.607
11623	3199	Sisma X SLV	14.2	0	0	0	1.4E2	0.607	11624	3199	Sisma Y SLV	0	14.2	0	0	1.4E2	0.607
11625	3199	Sisma X SLD	14	0	0	0	1.4E2	0.607	11626	3199	Sisma Y SLD	0	14	0	0	1.4E2	0.607
11627	3200	Sisma X SLV	26.2	0	0	0	2.5E2	0.607	11628	3200	Sisma Y SLV	0	26.2	0	0	2.5E2	0.607
11629	3200	Sisma X SLD	25.8	0	0	0	2.5E2	0.607	11630	3200	Sisma Y SLD	0	25.8	0	0	2.5E2	0.607
11631	3201	Sisma X SLV	29.4	0	0	0	2.8E2	0.607	11632	3201	Sisma Y SLV	0	29.4	0	0	2.8E2	0.607
11633	3201	Sisma X SLD	28.9	0	0	0	2.8E2	0.607	11634	3201	Sisma Y SLD	0	28.9	0	0	2.8E2	0.607
11635	3202	Sisma X SLV	12.2	0	0	0	1.2E2	0.608	11636	3202	Sisma Y SLV	0	12.2	0	0	1.2E2	0.608
11637	3202	Sisma X SLD	12	0	0	0	1.2E2	0.608	11638	3202	Sisma Y SLD	0	12	0	0	1.2E2	0.608
11639	3203	Sisma X SLV	25.8	0	0	0	2.5E2	0.608	11640	3203	Sisma Y SLV	0	25.8	0	0	2.5E2	0.608
11641	3203	Sisma X SLD	25.4	0	0	0	2.5E2	0.608	11642	3203	Sisma Y SLD	0	25.4	0	0	2.5E2	0.608
11643	3204	Sisma X SLV	12.6	0	0	0	121.87	0.608	11644	3204	Sisma Y SLV	0	12.6	0	0	121.87	0.608
11645	3204	Sisma X SLD	12.4	0	0	0	121.87	0.608	11646	3204	Sisma Y SLD	0	12.4	0	0	121.87	0.608
11647	3205	Sisma X SLV	14.4	0	0	0	1.4E2	0.608	11648	3205	Sisma Y SLV	0	14.4	0	0	1.4E2	0.608
11649	3205	Sisma X SLD	14.2	0	0	0	1.4E2	0.608	11650	3205	Sisma Y SLD	0	14.2	0	0	1.4E2	0.608
11651	3206	Sisma X SLV	26.2	0	0	0	2.5E2	0.608	11652	3206	Sisma Y SLV	0	26.2	0	0	2.5E2	0.608
11653	3206	Sisma X SLD	25.8	0	0	0	2.5E2	0.608	11654	3206	Sisma Y SLD	0	25.8	0	0	2.5E2	0.608
11655	3207	Sisma X SLV	14.2	0	0	0	1.4E2	0.609	11656	3207	Sisma Y SLV	0	14.2	0	0	1.4E2	0.609
11657	3207	Sisma X SLD	14	0	0	0	1.4E2	0.609	11658	3207	Sisma Y SLD	0	14	0	0	1.4E2	0.609
11659	3208	Sisma X SLV	26	0	0	0	2.5E2	0.609	11660	3208	Sisma Y SLV	0	26	0	0	2.5E2	0.609
11661	3208	Sisma X SLD	25.6	0	0	0	2.5E2	0.609	11662	3208	Sisma Y SLD	0	25.6	0	0	2.5E2	0.609
11663	3209	Sisma X SLV	15.2	0	0	0	1.5E2	0.609	11664	3209	Sisma Y SLV	0	15.2	0	0	1.5E2	0.609
11665	3209	Sisma X SLD	15	0	0	0	1.5E2	0.609	11666	3209	Sisma Y SLD	0	15	0	0	1.5E2	0.609
11667	3210	Sisma X SLV	16.6	0	0	0	1.6E2	0.615	11668	3210	Sisma Y SLV	0	16.6	0	0	1.6E2	0.615
11669	3210	Sisma X SLD	16.3	0	0	0	1.6E2	0.615	11670	3210	Sisma Y SLD	0	16.3	0	0	1.6E2	0.615
11671	3211	Sisma X SLV	20.2	0	0	0	1.9E2	0.622	11672	3211	Sisma Y SLV	0	20.2	0	0	1.9E2	0.622
11673	3211	Sisma X SLD	19.9	0	0	0	1.9E2	0.622	11674	3211	Sisma Y SLD	0	19.9	0	0	1.9E2	0.622
11675	3212	Sisma X SLV	21.6	0	0	0	2.0E2	0.631	11676	3212	Sisma Y SLV	0	21.6	0	0	2.0E2	0.631
11677	3212	Sisma X SLD	21.2	0	0	0	2.0E2	0.631	11678	3212	Sisma Y SLD	0	21.2	0	0	2.0E2	0.631
11679	3213	Sisma X SLV	13.3	0	0	0	1.2E2	0.635	11680	3213	Sisma Y SLV	0	13.3	0	0	1.2E2	0.635
11681	3213	Sisma X SLD	13.1	0	0	0	1.2E2	0.635	11682	3213	Sisma Y SLD	0	13.1	0	0	1.2E2	0.635
11683	3214	Sisma X SLV	22.1	0	0	0	2.0E2	0.636	11684	3214	Sisma Y SLV	0	22.1	0	0	2.0E2	0.636
11685	3214	Sisma X SLD	21.8	0	0	0	2.0E2	0.636	11686	3214	Sisma Y SLD	0	21.8	0	0	2.0E2	0.636
11687	3215	Sisma X SLV	13.2	0	0	0	1.2E2	0.639	11688	3215	Sisma Y SLV	0	13.2	0	0	1.2E2	0.639
11689	3215	Sisma X SLD	13	0	0	0	1.2E2	0.639	11690	3215	Sisma Y SLD	0	13	0	0	1.2E2	0.639
11691	3216	Sisma X SLV	12	0	0	0	1.1E2	0.639	11692	3216	Sisma Y SLV	0	12	0	0	1.1E2	0.639
11693	3216	Sisma X SLD	11.8	0	0	0	1.1E2	0.639	11694	3216	Sisma Y SLD	0	11.8	0	0	1.1E2	0.639
11695	3217	Sisma X SLV	21.6	0	0	0	2.0E2	0.639	11696	3217	Sisma Y SLV	0	21.6	0	0	2.0E2	0.639
11697	3217	Sisma X SLD	21.3	0	0	0	2.0E2	0.639	11698	3217	Sisma Y SLD	0	21.3	0	0	2.0E2	0.639
11699	3218	Sisma X SLV	13.3	0	0	0	1.2E2	0.64	11700	3218	Sisma Y SLV	0	13.3	0	0	1.2E2	0.64
11701	3218	Sisma X SLD	13.1	0	0	0	1.2E2	0.64	11702	3218	Sisma Y SLD	0	13.1	0	0	1.2E2	0.64
11703	3219	Sisma X SLV	10.3	0	0	0	94.832	0.64	11704	3219	Sisma Y SLV	0	10.3	0	0	94.832	0.64
11705	3219	Sisma X SLD	10.2	0	0	0	94.832	0.64	11706	3219	Sisma Y SLD	0	10.2	0	0	94.832	0.64
11707	3220	Sisma X SLV	9.8	0	0	0	89.724	0.64	11708	3220	Sisma Y SLV	0	9.8	0	0	89.724	0.64
11709	3220	Sisma X SLD	9.6	0	0	0	89.724	0.64	11710	3220	Sisma Y SLD	0	9.6	0	0	89.724	0.64
11711	3221	Sisma X SLV	13.1	0	0	0	1.2E2	0.64	11712	3221	Sisma Y SLV	0	13.1	0	0	1.2E2	0.64
11713	3221	Sisma X SLD	12.9	0	0	0	1.2E2	0.64	11714	3221	Sisma Y SLD	0	12.9	0	0	1.2E2	0.64
11715	3222	Sisma X SLV	8.8	0	0	0	80.558	0.64	11716	3222	Sisma Y SLV	0	8.8	0	0	80.558	0.64
11717	3222	Sisma X SLD	8.7	0	0	0	80.558	0.64	11718	3222	Sisma Y SLD	0	8.7	0	0	80.558	0.64
11719	3223	Sisma X SLV	18.8	0	0	0	1.7E2	0.64	11720	3223	Sisma Y SLV	0	18.8	0	0	1.7E2	0.64
11721	3223	Sisma X SLD	18.5	0	0	0	1.7E2	0.64	11722	3223	Sisma Y SLD	0	18.5	0	0	1.7E2	0.64
11723	3224	Sisma X SLV	11.2	0	0	0	1.0E2	0.642	11724	3224	Sisma Y SLV	0	11.2	0	0	1.0E2	0.642
11725	3224	Sisma X SLD	11	0	0	0	1.0E2	0.642	11726	3224	Sisma Y SLD	0	11	0	0	1.0E2	0.642
11727	3225	Sisma X SLV	19.4	0	0	0	1.8E2	0.642	11728	3225	Sisma Y SLV	0	19.4	0	0	1.8E2	0.642
11729	3225	Sisma X SLD	19.1	0	0	0	1.8E2	0.642	11730	3225	Sisma Y SLD	0	19.1	0	0	1.8E2	0.642
11731	3226	Sisma X SLV	12.2	0	0	0	1.1E2	0.642	11732	3226	Sisma Y SLV	0	12.2	0	0	1.1E2	0.642
11733	3226	Sisma X SLD	12	0	0	0	1.1E2	0.642	11734	3226	Sisma Y SLD	0	12	0	0	1.1E2	0.642
11735	3227	Sisma X SLV	9.2	0	0	0	83.649	0.643	11736	3227	Sisma Y SLV	0	9.2	0	0	83.649	0.643
11737	3227	Sisma X SLD	9	0	0	0	83.649	0.643	11738	3227	Sisma Y SLD	0	9	0	0	83.649	0.643
11739	3228	Sisma X SLV	17	0	0	0	1.5E2	0.643	11740	3228	Sisma Y SLV	0	17	0	0	1.5E2	0.643
11741	3228	Sisma X SLD	16.7	0	0	0	1.5E2	0.643	11742	3228	Sisma Y SLD	0	16.7	0	0	1.5E2	0.643
11743	3229	Sisma X SLV	11.5	0	0	0	1.0E2	0.645	11744	3229	Sisma Y SLV	0	11.5	0	0	1.0E2	0.645
11745	3229	Sisma X SLD	11.3	0	0	0	1.0E2	0.645	11746	3229	Sisma Y SLD	0	11.3	0	0	1.0E2	0.645
11747	3230	Sisma X SLV	31.4	0	0	0	2.9E2	0.645	11748	3230	Sisma Y SLV	0	31.4	0	0	2.9E2	0.645
11749	3230	Sisma X SLD	30.9	0	0	0	2.9E2	0.645	11750	3230	Sisma Y SLD	0	30.9	0	0	2.9E2	0.645
11751	3231	Sisma X SLV	18	0	0	0	163.54	0.646	11752	3231	Sisma Y SLV	0	18	0	0	163.54	0.646
11753	3231	Sisma X SLD	17.7	0	0	0	163.54	0.646	11754	3231	Sisma Y SLD	0	17.7	0	0	163.54	0.646
11755	3232	Sisma X SLV	11.2	0	0	0	1.0E2	0.647	11756	3232	Sisma Y SLV	0	11.2	0	0	1.0E2	0.647
11757	3232	Sisma X SLD	11	0	0	0	1.0E2	0.647	11758	3232	Sisma Y SLD	0	11	0	0	1.0E2	0.647
11759	3233	Sisma X SLV	12	0	0	0	1.1E2	0.649	11760	3233	Sisma Y SLV	0	12	0	0	1.1E2	0.649
11761	3233	Sisma X SLD	11.8	0	0	0	1.1E2	0.649	11762	3233	Sisma Y SLD	0	11.8	0	0	1.1E2	0.649
11763	3234	Sisma X SLV	26.2	0	0	0	2.4E2	0.651	11764	3234	Sisma Y SLV	0	26.2	0	0	2.4E2	0.651
11765	3234	Sisma X SLD	25.8	0	0	0	2.4E2	0.651	11766	3234	Sisma Y SLD	0	25.8	0	0	2.4E2	0.651
11767	3235	Sisma X SLV	17.7	0	0	0	1.6E2	0.652	11768	3235	Sisma Y SLV	0	17.7	0	0	1.6E2	0.652
11769	3235	Sisma X SLD	17.5	0	0	0	1.6E2	0.652	11770	3235	Sisma Y SLD	0	17.5	0	0	1.6E2	0.652
11771	3236	Sisma X SLV	12.9	0	0	0	1.2E2	0.652	11772	3236	Sisma Y SLV	0	12.9	0	0	1.2E2	0.652
11773	3236	Sisma X SLD	12.7	0	0	0	1.2E2	0.652	11774	3236	Sisma Y SLD	0	12.7	0	0	1.2E2	0.652
11775	3237	Sisma X SLV	40.3	0	0	0	361.6	0.654	11776	3237	Sisma Y SLV	0	40.3	0	0	361.6	0.654
11777	3237	Sisma X SLD	39.7	0	0	0	361.6	0.654	11778	3237	Sisma Y SLD	0	39.7	0	0	361.6	0.654
11779	3238	Sisma X SLV	42.3	0	0	0	378.93	0.654	11780	3238	Sisma Y SLV	0	42.3	0	0	378.93	0.654
11781	3238	Sisma X SLD	41.6	0	0	0	378.93	0.654	11782	3238	Sisma Y SLD	0	41.6	0	0	378.93	0.654
11783	3239	Sisma X SLV	41.7	0	0	0	3.7E2	0.654	11784	3239	Sisma Y SLV	0	41.7	0	0	3.7E2	0.654
11785	3239	Sisma X SLD	41	0	0	0	3.7E2	0.654	11786	3239	Sisma Y SLD	0	41	0	0	3.7E2	0.654
11787	3240	Sisma X SLV	34.4	0	0	0	3.1E2	0.654	11788	3240	Sisma Y SLV	0	34.4	0	0	3.1E2	0.654
11789	3240	Sisma X SLD	33.9	0	0	0	3.1E2	0.654	11790	3240	Sisma Y SLD	0	33.9	0	0	3.1E2	0.654
11791	3241	Sisma X SLV	34.2	0	0	0	3.1E2	0.654	11792	3241	Sisma Y SLV	0	34.2	0	0	3.1E2	0.654

muratura

Indice	Nodo	Condizione	Fx	Fy	Fz	Mz	Peso	Gamma	Indice	Nodo	Condizione	Fx	Fy	Fz	Mz	Peso	Gamma
11793	3241	Sisma X SLD	33.7	0	0	0	3.1E2	0.654	11794	3241	Sisma Y SLD	0	33.7	0	0	3.1E2	0.654
11795	3242	Sisma X SLV	34.3	0	0	0	3.1E2	0.654	11796	3242	Sisma Y SLV	0	34.3	0	0	3.1E2	0.654
11797	3242	Sisma X SLD	33.7	0	0	0	3.1E2	0.654	11798	3242	Sisma Y SLD	0	33.7	0	0	3.1E2	0.654
11799	3243	Sisma X SLV	34.6	0	0	0	3.1E2	0.654	11800	3243	Sisma Y SLV	0	34.6	0	0	3.1E2	0.654
11801	3243	Sisma X SLD	34	0	0	0	3.1E2	0.654	11802	3243	Sisma Y SLD	0	34	0	0	3.1E2	0.654
11803	3244	Sisma X SLV	32.4	0	0	0	2.9E2	0.654	11804	3244	Sisma Y SLV	0	32.4	0	0	2.9E2	0.654
11805	3244	Sisma X SLD	31.9	0	0	0	2.9E2	0.654	11806	3244	Sisma Y SLD	0	31.9	0	0	2.9E2	0.654
11807	3245	Sisma X SLV	32.4	0	0	0	2.9E2	0.654	11808	3245	Sisma Y SLV	0	32.4	0	0	2.9E2	0.654
11809	3245	Sisma X SLD	31.9	0	0	0	2.9E2	0.654	11810	3245	Sisma Y SLD	0	31.9	0	0	2.9E2	0.654
11811	3246	Sisma X SLV	34.2	0	0	0	3.1E2	0.654	11812	3246	Sisma Y SLV	0	34.2	0	0	3.1E2	0.654
11813	3246	Sisma X SLD	33.7	0	0	0	3.1E2	0.654	11814	3246	Sisma Y SLD	0	33.7	0	0	3.1E2	0.654
11815	3247	Sisma X SLV	34.9	0	0	0	3.1E2	0.654	11816	3247	Sisma Y SLV	0	34.9	0	0	3.1E2	0.654
11817	3247	Sisma X SLD	34.4	0	0	0	3.1E2	0.654	11818	3247	Sisma Y SLD	0	34.4	0	0	3.1E2	0.654
11819	3248	Sisma X SLV	35.2	0	0	0	3.2E2	0.655	11820	3248	Sisma Y SLV	0	35.2	0	0	3.2E2	0.655
11821	3248	Sisma X SLD	34.6	0	0	0	3.2E2	0.655	11822	3248	Sisma Y SLD	0	34.6	0	0	3.2E2	0.655
11823	3249	Sisma X SLV	32.4	0	0	0	2.9E2	0.655	11824	3249	Sisma Y SLV	0	32.4	0	0	2.9E2	0.655
11825	3249	Sisma X SLD	31.8	0	0	0	2.9E2	0.655	11826	3249	Sisma Y SLD	0	31.8	0	0	2.9E2	0.655
11827	3250	Sisma X SLV	32.3	0	0	0	2.9E2	0.655	11828	3250	Sisma Y SLV	0	32.3	0	0	2.9E2	0.655
11829	3250	Sisma X SLD	31.8	0	0	0	2.9E2	0.655	11830	3250	Sisma Y SLD	0	31.8	0	0	2.9E2	0.655
11831	3251	Sisma X SLV	34.1	0	0	0	3.1E2	0.655	11832	3251	Sisma Y SLV	0	34.1	0	0	3.1E2	0.655
11833	3251	Sisma X SLD	33.6	0	0	0	3.1E2	0.655	11834	3251	Sisma Y SLD	0	33.6	0	0	3.1E2	0.655
11835	3252	Sisma X SLV	35.4	0	0	0	3.2E2	0.655	11836	3252	Sisma Y SLV	0	35.4	0	0	3.2E2	0.655
11837	3252	Sisma X SLD	34.9	0	0	0	3.2E2	0.655	11838	3252	Sisma Y SLD	0	34.9	0	0	3.2E2	0.655
11839	3253	Sisma X SLV	32.4	0	0	0	2.9E2	0.655	11840	3253	Sisma Y SLV	0	32.4	0	0	2.9E2	0.655
11841	3253	Sisma X SLD	31.9	0	0	0	2.9E2	0.655	11842	3253	Sisma Y SLD	0	31.9	0	0	2.9E2	0.655
11843	3254	Sisma X SLV	32.2	0	0	0	2.9E2	0.655	11844	3254	Sisma Y SLV	0	32.2	0	0	2.9E2	0.655
11845	3254	Sisma X SLD	31.7	0	0	0	2.9E2	0.655	11846	3254	Sisma Y SLD	0	31.7	0	0	2.9E2	0.655
11847	3255	Sisma X SLV	34.1	0	0	0	3.0E2	0.655	11848	3255	Sisma Y SLV	0	34.1	0	0	3.0E2	0.655
11849	3255	Sisma X SLD	33.6	0	0	0	3.0E2	0.655	11850	3255	Sisma Y SLD	0	33.6	0	0	3.0E2	0.655
11851	3256	Sisma X SLV	35.4	0	0	0	3.2E2	0.655	11852	3256	Sisma Y SLV	0	35.4	0	0	3.2E2	0.655
11853	3256	Sisma X SLD	34.9	0	0	0	3.2E2	0.655	11854	3256	Sisma Y SLD	0	34.9	0	0	3.2E2	0.655
11855	3257	Sisma X SLV	32.6	0	0	0	2.9E2	0.655	11856	3257	Sisma Y SLV	0	32.6	0	0	2.9E2	0.655
11857	3257	Sisma X SLD	32.1	0	0	0	2.9E2	0.655	11858	3257	Sisma Y SLD	0	32.1	0	0	2.9E2	0.655
11859	3258	Sisma X SLV	34.1	0	0	0	3.1E2	0.656	11860	3258	Sisma Y SLV	0	34.1	0	0	3.1E2	0.656
11861	3258	Sisma X SLD	33.6	0	0	0	3.1E2	0.656	11862	3258	Sisma Y SLD	0	33.6	0	0	3.1E2	0.656
11863	3259	Sisma X SLV	32.1	0	0	0	2.9E2	0.656	11864	3259	Sisma Y SLV	0	32.1	0	0	2.9E2	0.656
11865	3259	Sisma X SLD	31.6	0	0	0	2.9E2	0.656	11866	3259	Sisma Y SLD	0	31.6	0	0	2.9E2	0.656
11867	3260	Sisma X SLV	32.8	0	0	0	2.9E2	0.656	11868	3260	Sisma Y SLV	0	32.8	0	0	2.9E2	0.656
11869	3260	Sisma X SLD	32.2	0	0	0	2.9E2	0.656	11870	3260	Sisma Y SLD	0	32.2	0	0	2.9E2	0.656
11871	3261	Sisma X SLV	34.2	0	0	0	3.1E2	0.656	11872	3261	Sisma Y SLV	0	34.2	0	0	3.1E2	0.656
11873	3261	Sisma X SLD	33.7	0	0	0	3.1E2	0.656	11874	3261	Sisma Y SLD	0	33.7	0	0	3.1E2	0.656
11875	3262	Sisma X SLV	32.7	0	0	0	2.9E2	0.656	11876	3262	Sisma Y SLV	0	32.7	0	0	2.9E2	0.656
11877	3262	Sisma X SLD	32.2	0	0	0	2.9E2	0.656	11878	3262	Sisma Y SLD	0	32.2	0	0	2.9E2	0.656
11879	3263	Sisma X SLV	34.2	0	0	0	3.1E2	0.656	11880	3263	Sisma Y SLV	0	34.2	0	0	3.1E2	0.656
11881	3263	Sisma X SLD	33.7	0	0	0	3.1E2	0.656	11882	3263	Sisma Y SLD	0	33.7	0	0	3.1E2	0.656
11883	3264	Sisma X SLV	32	0	0	0	2.9E2	0.656	11884	3264	Sisma Y SLV	0	32	0	0	2.9E2	0.656
11885	3264	Sisma X SLD	31.5	0	0	0	2.9E2	0.656	11886	3264	Sisma Y SLD	0	31.5	0	0	2.9E2	0.656
11887	3265	Sisma X SLV	32.5	0	0	0	2.9E2	0.656	11888	3265	Sisma Y SLV	0	32.5	0	0	2.9E2	0.656
11889	3265	Sisma X SLD	32	0	0	0	2.9E2	0.656	11890	3265	Sisma Y SLD	0	32	0	0	2.9E2	0.656
11891	3266	Sisma X SLV	33.1	0	0	0	3.0E2	0.656	11892	3266	Sisma Y SLV	0	33.1	0	0	3.0E2	0.656
11893	3266	Sisma X SLD	32.6	0	0	0	3.0E2	0.656	11894	3266	Sisma Y SLD	0	32.6	0	0	3.0E2	0.656
11895	3267	Sisma X SLV	34.9	0	0	0	3.1E2	0.656	11896	3267	Sisma Y SLV	0	34.9	0	0	3.1E2	0.656
11897	3267	Sisma X SLD	34.4	0	0	0	3.1E2	0.656	11898	3267	Sisma Y SLD	0	34.4	0	0	3.1E2	0.656
11899	3268	Sisma X SLV	34.1	0	0	0	3.0E2	0.656	11900	3268	Sisma Y SLV	0	34.1	0	0	3.0E2	0.656
11901	3268	Sisma X SLD	33.6	0	0	0	3.0E2	0.656	11902	3268	Sisma Y SLD	0	33.6	0	0	3.0E2	0.656
11903	3269	Sisma X SLV	32	0	0	0	2.9E2	0.657	11904	3269	Sisma Y SLV	0	32	0	0	2.9E2	0.657
11905	3269	Sisma X SLD	31.5	0	0	0	2.9E2	0.657	11906	3269	Sisma Y SLD	0	31.5	0	0	2.9E2	0.657
11907	3270	Sisma X SLV	32.2	0	0	0	287.02	0.657	11908	3270	Sisma Y SLV	0	32.2	0	0	287.02	0.657
11909	3270	Sisma X SLD	31.6	0	0	0	287.02	0.657	11910	3270	Sisma Y SLD	0	31.6	0	0	287.02	0.657
11911	3271	Sisma X SLV	33.1	0	0	0	3.0E2	0.657	11912	3271	Sisma Y SLV	0	33.1	0	0	3.0E2	0.657
11913	3271	Sisma X SLD	32.6	0	0	0	3.0E2	0.657	11914	3271	Sisma Y SLD	0	32.6	0	0	3.0E2	0.657
11915	3272	Sisma X SLV	33	0	0	0	2.9E2	0.657	11916	3272	Sisma Y SLV	0	33	0	0	2.9E2	0.657
11917	3272	Sisma X SLD	32.5	0	0	0	2.9E2	0.657	11918	3272	Sisma Y SLD	0	32.5	0	0	2.9E2	0.657
11919	3273	Sisma X SLV	33.9	0	0	0	3.0E2	0.657	11920	3273	Sisma Y SLV	0	33.9	0	0	3.0E2	0.657
11921	3273	Sisma X SLD	33.4	0	0	0	3.0E2	0.657	11922	3273	Sisma Y SLD	0	33.4	0	0	3.0E2	0.657
11923	3274	Sisma X SLV	31.9	0	0	0	2.8E2	0.657	11924	3274	Sisma Y SLV	0	31.9	0	0	2.8E2	0.657
11925	3274	Sisma X SLD	31.4	0	0	0	2.8E2	0.657	11926	3274	Sisma Y SLD	0	31.4	0	0	2.8E2	0.657
11927	3275	Sisma X SLV	31.9	0	0	0	2.8E2	0.657	11928	3275	Sisma Y SLV	0	31.9	0	0	2.8E2	0.657
11929	3275	Sisma X SLD	31.4	0	0	0	2.8E2	0.657	11930	3275	Sisma Y SLD	0	31.4	0	0	2.8E2	0.657
11931	3276	Sisma X SLV	31.7	0	0	0	2.8E2	0.657	11932	3276	Sisma Y SLV	0	31.7	0	0	2.8E2	0.657
11933	3276	Sisma X SLD	31.2	0	0	0	2.8E2	0.657	11934	3276	Sisma Y SLD	0	31.2	0	0	2.8E2	0.657
11935	3277	Sisma X SLV	31.3	0	0	0	2.8E2	0.657	11936	3277	Sisma Y SLV	0	31.3	0	0	2.8E2	0.657
11937	3277	Sisma X SLD	30.8	0	0	0	2.8E2	0.657	11938	3277	Sisma Y SLD	0	30.8	0	0	2.8E2	0.657
11939	3278	Sisma X SLV	16.4	0	0	0	1.5E2	0.657	11940	3278	Sisma Y SLV	0	16.4	0	0	1.5E2	0.657
11941	3278	Sisma X SLD	16.1	0	0	0	1.5E2	0.657	11942	3278	Sisma Y SLD	0	16.1	0	0	1.5E2	0.657
11943	3279	Sisma X SLV	32.4	0	0	0	2.9E2	0.657	11944	3279	Sisma Y SLV	0	32.4	0	0	2.9E2	0.657
11945	3279	Sisma X SLD	31.9	0	0	0	2.9E2	0.657	11946	3279	Sisma Y SLD	0	31.9	0	0	2.9E2	0.657
11947	3280	Sisma X SLV	33.7	0	0	0	3.0E2	0.657	11948	3280	Sisma Y SLV	0	33.7	0	0	3.0E2	0.657
11949	3280	Sisma X SLD	33.2	0	0	0	3.0E2	0.657	11950	3280	Sisma Y SLD	0	33.2	0	0	3.0E2	0.657
11951	3281	Sisma X SLV	31.8	0	0	0	2.8E2	0.657	11952	3281	Sisma Y SLV	0	31.8	0	0	2.8E2	0.657
11953	3281	Sisma X SLD	31.3	0	0	0	2.8E2	0.657	11954	3281	Sisma Y SLD	0	31.3	0	0	2.8E2	0.657
11955	3282	Sisma X SLV	32.9	0	0	0	293.22	0.658	11956	3282	Sisma Y SLV	0	32.9	0	0	293.22	0.658
11957	3282	Sisma X SLD	32.4	0	0	0	293.22	0.658	11958	3282	Sisma Y SLD	0	32.4	0	0	293.22	0.658
11959	3283	Sisma X SLV	34.2	0	0	0	3.0E2	0.658	11960	3283	Sisma Y SLV	0	34.2	0	0	3.0E2	0.658
11961	3283	Sisma X SLD	33.6	0	0	0	3.0E2	0.658	11962	3283	Sisma Y SLD	0	33.6	0	0	3.0E2	0.658
11963	3284	Sisma X SLV	30.9	0	0	0	2.8E2	0.658	11964	3284	Sisma Y SLV	0	30.9	0	0	2.8E2	0.658
11965	3284	Sisma X SLD	30.4	0	0	0	2.8E2	0.658	11966	3284	Sisma Y SLD	0	30.4	0	0	2.8E2	0.658
11967	3285	Sisma X SLV	32.7	0	0	0	2.9E2	0.658	11968	3285	Sisma Y SLV	0	32.7	0	0	2.9E2	0.658
11969	3285	Sisma X SLD	32.2	0	0	0	2.9E2	0.658	11970	3285	Sisma Y SLD	0	32.2	0	0	2.9E2	0.658
11971	3286	Sisma X SLV	31.4	0	0	0	279.5	0.658	11972	3286	Sisma Y SLV	0	31.4	0	0	279.5	0.658
11973	3286	Sisma X SLD	30.9	0	0	0	279.5	0.658	11974	3286	Sisma Y SLD	0	30.9	0	0	279.5	0.658
11975	3287	Sisma X SLV	31.7	0	0	0	2.8E2	0.658	11976	3287	Sisma Y SLV	0	31.7	0	0	2.8E2	0.658
11977	3287	Sisma X SLD	31.2	0	0	0	2.8E2	0.658	11978	3287	Sisma Y SLD	0	31.2	0	0	2.8E2	0.658
11979	3288	Sisma X SLV	32.3	0	0	0	2.9E2	0.658	11980	3288	Sisma Y SLV	0	32.3	0	0	2.9E2	0.658
11981	3288	Sisma X SLD	31.8	0	0	0	2.9E2	0.658	11982	3288	Sisma Y SLD	0	31.8	0	0	2.9E2	0.658
11983	3289	Sisma X SLV	33.9	0	0	0	3.0E2	0.658	11984	3289	Sisma Y SLV	0	33.9	0	0	3.0E2	0.658
11985	3289	Sisma X SLD	33.3	0	0	0	3.0E2	0.658	11986	3289	Sisma Y SLD	0	33.3	0	0	3.0E2	0.658
11987	3290	Sisma X SLV	31.7	0	0	0	2.8E2	0.658	11988	3290	Sisma Y SLV	0	31.7	0	0	2.8E2	0.658
11989	3290	Sisma X SLD	31.2	0	0	0	2.8E2	0.658	11990	3290	Sisma Y SLD	0	31.2	0	0	2.8E2	0.658
11991	3291	Sisma X SLV	32.3	0	0	0	2.9E2	0.658	11992	3291	Sisma Y SLV	0	32.3	0	0	2.9E2	0.658
11993	3291	Sisma X SLD	31.8	0	0	0	2.9E2	0.658	11994	3291	Sisma Y SLD	0	31.8	0	0	2.9E2	0.658

Indice	Nodo	Condizione	Fx	Fy	Fz	Mz	Peso	Gamma	Indice	Nodo	Condizione	Fx	Fy	Fz	Mz	Peso	Gamma
11995	3292	Sisma X SLV	33.9	0	0	0	3.0E2	0.658	11996	3292	Sisma Y SLV	0	33.9	0	0	3.0E2	0.658
11997	3292	Sisma X SLD	33.4	0	0	0	3.0E2	0.658	11998	3292	Sisma Y SLD	0	33.4	0	0	3.0E2	0.658
11999	3293	Sisma X SLV	31.8	0	0	0	283.21	0.658	12000	3293	Sisma Y SLV	0	31.8	0	0	283.21	0.658
12001	3293	Sisma X SLD	31.3	0	0	0	283.21	0.658	12002	3293	Sisma Y SLD	0	31.3	0	0	283.21	0.658
12003	3294	Sisma X SLV	32.4	0	0	0	2.9E2	0.658	12004	3294	Sisma Y SLV	0	32.4	0	0	2.9E2	0.658
12005	3294	Sisma X SLD	31.9	0	0	0	2.9E2	0.658	12006	3294	Sisma Y SLD	0	31.9	0	0	2.9E2	0.658
12007	3295	Sisma X SLV	32.2	0	0	0	2.9E2	0.658	12008	3295	Sisma Y SLV	0	32.2	0	0	2.9E2	0.658
12009	3295	Sisma X SLD	31.7	0	0	0	2.9E2	0.658	12010	3295	Sisma Y SLD	0	31.7	0	0	2.9E2	0.658
12011	3296	Sisma X SLV	33.7	0	0	0	300.44	0.658	12012	3296	Sisma Y SLV	0	33.7	0	0	300.44	0.658
12013	3296	Sisma X SLD	33.2	0	0	0	300.44	0.658	12014	3296	Sisma Y SLD	0	33.2	0	0	300.44	0.658
12015	3297	Sisma X SLV	31.5	0	0	0	2.8E2	0.658	12016	3297	Sisma Y SLV	0	31.5	0	0	2.8E2	0.658
12017	3297	Sisma X SLD	31	0	0	0	2.8E2	0.658	12018	3297	Sisma Y SLD	0	31	0	0	2.8E2	0.658
12019	3298	Sisma X SLV	32.2	0	0	0	2.9E2	0.658	12020	3298	Sisma Y SLV	0	32.2	0	0	2.9E2	0.658
12021	3298	Sisma X SLD	31.7	0	0	0	2.9E2	0.658	12022	3298	Sisma Y SLD	0	31.7	0	0	2.9E2	0.658
12023	3299	Sisma X SLV	33.9	0	0	0	3.0E2	0.658	12024	3299	Sisma Y SLV	0	33.9	0	0	3.0E2	0.658
12025	3299	Sisma X SLD	33.3	0	0	0	3.0E2	0.658	12026	3299	Sisma Y SLD	0	33.3	0	0	3.0E2	0.658
12027	3300	Sisma X SLV	31.7	0	0	0	2.8E2	0.658	12028	3300	Sisma Y SLV	0	31.7	0	0	2.8E2	0.658
12029	3300	Sisma X SLD	31.2	0	0	0	2.8E2	0.658	12030	3300	Sisma Y SLD	0	31.2	0	0	2.8E2	0.658
12031	3301	Sisma X SLV	30.7	0	0	0	273.4	0.658	12032	3301	Sisma Y SLV	0	30.7	0	0	273.4	0.658
12033	3301	Sisma X SLD	30.2	0	0	0	273.4	0.658	12034	3301	Sisma Y SLD	0	30.2	0	0	273.4	0.658
12035	3302	Sisma X SLV	33.4	0	0	0	3.0E2	0.658	12036	3302	Sisma Y SLV	0	33.4	0	0	3.0E2	0.658
12037	3302	Sisma X SLD	32.9	0	0	0	3.0E2	0.658	12038	3302	Sisma Y SLD	0	32.9	0	0	3.0E2	0.658
12039	3303	Sisma X SLV	31.7	0	0	0	2.8E2	0.658	12040	3303	Sisma Y SLV	0	31.7	0	0	2.8E2	0.658
12041	3303	Sisma X SLD	31.2	0	0	0	2.8E2	0.658	12042	3303	Sisma Y SLD	0	31.2	0	0	2.8E2	0.658
12043	3304	Sisma X SLV	32	0	0	0	2.8E2	0.659	12044	3304	Sisma Y SLV	0	32	0	0	2.8E2	0.659
12045	3304	Sisma X SLD	31.5	0	0	0	2.8E2	0.659	12046	3304	Sisma Y SLD	0	31.5	0	0	2.8E2	0.659
12047	3305	Sisma X SLV	31.9	0	0	0	2.8E2	0.659	12048	3305	Sisma Y SLV	0	31.9	0	0	2.8E2	0.659
12049	3305	Sisma X SLD	31.4	0	0	0	2.8E2	0.659	12050	3305	Sisma Y SLD	0	31.4	0	0	2.8E2	0.659
12051	3306	Sisma X SLV	33.6	0	0	0	3.0E2	0.659	12052	3306	Sisma Y SLV	0	33.6	0	0	3.0E2	0.659
12053	3306	Sisma X SLD	33.1	0	0	0	3.0E2	0.659	12054	3306	Sisma Y SLD	0	33.1	0	0	3.0E2	0.659
12055	3307	Sisma X SLV	31.3	0	0	0	278.33	0.659	12056	3307	Sisma Y SLV	0	31.3	0	0	278.33	0.659
12057	3307	Sisma X SLD	30.8	0	0	0	278.33	0.659	12058	3307	Sisma Y SLD	0	30.8	0	0	278.33	0.659
12059	3308	Sisma X SLV	31.2	0	0	0	2.8E2	0.659	12060	3308	Sisma Y SLV	0	31.2	0	0	2.8E2	0.659
12061	3308	Sisma X SLD	30.8	0	0	0	2.8E2	0.659	12062	3308	Sisma Y SLD	0	30.8	0	0	2.8E2	0.659
12063	3309	Sisma X SLV	31.9	0	0	0	2.8E2	0.659	12064	3309	Sisma Y SLV	0	31.9	0	0	2.8E2	0.659
12065	3309	Sisma X SLD	31.4	0	0	0	2.8E2	0.659	12066	3309	Sisma Y SLD	0	31.4	0	0	2.8E2	0.659
12067	3310	Sisma X SLV	33.7	0	0	0	3.0E2	0.659	12068	3310	Sisma Y SLV	0	33.7	0	0	3.0E2	0.659
12069	3310	Sisma X SLD	33.2	0	0	0	3.0E2	0.659	12070	3310	Sisma Y SLD	0	33.2	0	0	3.0E2	0.659
12071	3311	Sisma X SLV	31.4	0	0	0	2.8E2	0.659	12072	3311	Sisma Y SLV	0	31.4	0	0	2.8E2	0.659
12073	3311	Sisma X SLD	30.9	0	0	0	2.8E2	0.659	12074	3311	Sisma Y SLD	0	30.9	0	0	2.8E2	0.659
12075	3312	Sisma X SLV	16.7	0	0	0	1.5E2	0.659	12076	3312	Sisma Y SLV	0	16.7	0	0	1.5E2	0.659
12077	3312	Sisma X SLD	16.4	0	0	0	1.5E2	0.659	12078	3312	Sisma Y SLD	0	16.4	0	0	1.5E2	0.659
12079	3313	Sisma X SLV	16.7	0	0	0	1.5E2	0.659	12080	3313	Sisma Y SLV	0	16.7	0	0	1.5E2	0.659
12081	3313	Sisma X SLD	16.4	0	0	0	1.5E2	0.659	12082	3313	Sisma Y SLD	0	16.4	0	0	1.5E2	0.659
12083	3314	Sisma X SLV	31.6	0	0	0	2.8E2	0.659	12084	3314	Sisma Y SLV	0	31.6	0	0	2.8E2	0.659
12085	3314	Sisma X SLD	31.1	0	0	0	2.8E2	0.659	12086	3314	Sisma Y SLD	0	31.1	0	0	2.8E2	0.659
12087	3315	Sisma X SLV	31.7	0	0	0	2.8E2	0.659	12088	3315	Sisma Y SLV	0	31.7	0	0	2.8E2	0.659
12089	3315	Sisma X SLD	31.2	0	0	0	2.8E2	0.659	12090	3315	Sisma Y SLD	0	31.2	0	0	2.8E2	0.659
12091	3316	Sisma X SLV	31.8	0	0	0	2.8E2	0.659	12092	3316	Sisma Y SLV	0	31.8	0	0	2.8E2	0.659
12093	3316	Sisma X SLD	31.3	0	0	0	2.8E2	0.659	12094	3316	Sisma Y SLD	0	31.3	0	0	2.8E2	0.659
12095	3317	Sisma X SLV	33.4	0	0	0	3.0E2	0.659	12096	3317	Sisma Y SLV	0	33.4	0	0	3.0E2	0.659
12097	3317	Sisma X SLD	32.9	0	0	0	3.0E2	0.659	12098	3317	Sisma Y SLD	0	32.9	0	0	3.0E2	0.659
12099	3318	Sisma X SLV	31.1	0	0	0	2.8E2	0.659	12100	3318	Sisma Y SLV	0	31.1	0	0	2.8E2	0.659
12101	3318	Sisma X SLD	30.6	0	0	0	2.8E2	0.659	12102	3318	Sisma Y SLD	0	30.6	0	0	2.8E2	0.659
12103	3319	Sisma X SLV	30.6	0	0	0	2.7E2	0.659	12104	3319	Sisma Y SLV	0	30.6	0	0	2.7E2	0.659
12105	3319	Sisma X SLD	30.1	0	0	0	2.7E2	0.659	12106	3319	Sisma Y SLD	0	30.1	0	0	2.7E2	0.659
12107	3320	Sisma X SLV	31.5	0	0	0	2.8E2	0.659	12108	3320	Sisma Y SLV	0	31.5	0	0	2.8E2	0.659
12109	3320	Sisma X SLD	31	0	0	0	2.8E2	0.659	12110	3320	Sisma Y SLD	0	31	0	0	2.8E2	0.659
12111	3321	Sisma X SLV	31.7	0	0	0	2.8E2	0.659	12112	3321	Sisma Y SLV	0	31.7	0	0	2.8E2	0.659
12113	3321	Sisma X SLD	31.2	0	0	0	2.8E2	0.659	12114	3321	Sisma Y SLD	0	31.2	0	0	2.8E2	0.659
12115	3322	Sisma X SLV	33.3	0	0	0	3.0E2	0.659	12116	3322	Sisma Y SLV	0	33.3	0	0	3.0E2	0.659
12117	3322	Sisma X SLD	32.8	0	0	0	3.0E2	0.659	12118	3322	Sisma Y SLD	0	32.8	0	0	3.0E2	0.659
12119	3323	Sisma X SLV	31.1	0	0	0	2.8E2	0.659	12120	3323	Sisma Y SLV	0	31.1	0	0	2.8E2	0.659
12121	3323	Sisma X SLD	30.6	0	0	0	2.8E2	0.659	12122	3323	Sisma Y SLD	0	30.6	0	0	2.8E2	0.659
12123	3324	Sisma X SLV	31.2	0	0	0	2.8E2	0.659	12124	3324	Sisma Y SLV	0	31.2	0	0	2.8E2	0.659
12125	3324	Sisma X SLD	30.7	0	0	0	2.8E2	0.659	12126	3324	Sisma Y SLD	0	30.7	0	0	2.8E2	0.659
12127	3325	Sisma X SLV	31.7	0	0	0	2.8E2	0.659	12128	3325	Sisma Y SLV	0	31.7	0	0	2.8E2	0.659
12129	3325	Sisma X SLD	31.1	0	0	0	2.8E2	0.659	12130	3325	Sisma Y SLD	0	31.1	0	0	2.8E2	0.659
12131	3326	Sisma X SLV	33.3	0	0	0	3.0E2	0.659	12132	3326	Sisma Y SLV	0	33.3	0	0	3.0E2	0.659
12133	3326	Sisma X SLD	32.8	0	0	0	3.0E2	0.659	12134	3326	Sisma Y SLD	0	32.8	0	0	3.0E2	0.659
12135	3327	Sisma X SLV	31.1	0	0	0	2.8E2	0.659	12136	3327	Sisma Y SLV	0	31.1	0	0	2.8E2	0.659
12137	3327	Sisma X SLD	30.6	0	0	0	2.8E2	0.659	12138	3327	Sisma Y SLD	0	30.6	0	0	2.8E2	0.659
12139	3328	Sisma X SLV	31.1	0	0	0	2.8E2	0.659	12140	3328	Sisma Y SLV	0	31.1	0	0	2.8E2	0.659
12141	3328	Sisma X SLD	30.6	0	0	0	2.8E2	0.659	12142	3328	Sisma Y SLD	0	30.6	0	0	2.8E2	0.659
12143	3329	Sisma X SLV	31.6	0	0	0	2.8E2	0.659	12144	3329	Sisma Y SLV	0	31.6	0	0	2.8E2	0.659
12145	3329	Sisma X SLD	31.1	0	0	0	2.8E2	0.659	12146	3329	Sisma Y SLD	0	31.1	0	0	2.8E2	0.659
12147	3330	Sisma X SLV	33.3	0	0	0	3.0E2	0.659	12148	3330	Sisma Y SLV	0	33.3	0	0	3.0E2	0.659
12149	3330	Sisma X SLD	32.8	0	0	0	3.0E2	0.659	12150	3330	Sisma Y SLD	0	32.8	0	0	3.0E2	0.659
12151	3331	Sisma X SLV	31.1	0	0	0	2.8E2	0.659	12152	3331	Sisma Y SLV	0	31.1	0	0	2.8E2	0.659
12153	3331	Sisma X SLD	30.6	0	0	0	2.8E2	0.659	12154	3331	Sisma Y SLD	0	30.6	0	0	2.8E2	0.659
12155	3332	Sisma X SLV	31.1	0	0	0	2.8E2	0.659	12156	3332	Sisma Y SLV	0	31.1	0	0	2.8E2	0.659
12157	3332	Sisma X SLD	30.6	0	0	0	2.8E2	0.659	12158	3332	Sisma Y SLD	0	30.6	0	0	2.8E2	0.659
12159	3333	Sisma X SLV	31.6	0	0	0	2.8E2	0.659	12160	3333	Sisma Y SLV	0	31.6	0	0	2.8E2	0.659
12161	3333	Sisma X SLD	31.1	0	0	0	2.8E2	0.659	12162	3333	Sisma Y SLD	0	31.1	0	0	2.8E2	0.659
12163	3334	Sisma X SLV	31.1	0	0	0	2.8E2	0.659	12164	3334	Sisma Y SLV	0	31.1	0	0	2.8E2	0.659
12165	3334	Sisma X SLD	30.6	0	0	0	2.8E2	0.659	12166	3334	Sisma Y SLD	0	30.6	0	0	2.8E2	0.659
12167	3335	Sisma X SLV	31.2	0	0	0	2.8E2	0.659	12168	3335	Sisma Y SLV	0	31.2	0	0	2.8E2	0.659
12169	3335	Sisma X SLD	30.7	0	0	0	2.8E2	0.659	12170	3335	Sisma Y SLD	0	30.7	0	0	2.8E2	0.659
12171	3336	Sisma X SLV	50.2	0	0	0	4.5E2	0.659	12172	3336	Sisma Y SLV	0	50.2	0	0	4.5E2	0.659
12173	3336	Sisma X SLD	49.4	0	0	0	4.5E2	0.659	12174	3336	Sisma Y SLD	0	49.4	0	0	4.5E2	0.659
12175	3337	Sisma X SLV	48.3	0	0	0	4.3E2	0.659	12176	3337	Sisma Y SLV	0	48.3	0	0	4.3E2	0.659
12177	3337	Sisma X SLD	47.5	0	0	0	4.3E2	0.659	12178	3337	Sisma Y SLD	0	47.5	0	0	4.3E2	0.659
12179	3338	Sisma X SLV	31.6	0	0	0	2.8E2	0.659	12180	3338	Sisma Y SLV	0	31.6	0	0	2.8E2	0.659
12181	3338	Sisma X SLD	31.1	0	0	0	2.8E2	0.659	12182	3338	Sisma Y SLD	0	31.1	0	0	2.8E2	0.659
12183	3339	Sisma X SLV	31.6	0	0	0	2.8E2	0.659	12184	3339	Sisma Y SLV	0	31.6	0	0	2.8E2	0.659
12185	3339	Sisma X SLD	31.1	0	0	0	2.8E2	0.659	12186	3339	Sisma Y SLD	0	31.1	0	0	2.8E2	0.659
12187	3340	Sisma X SLV	31.5	0	0	0	280.06	0.659	12188	3340	Sisma Y SLV	0	31.5	0	0	280.06	0.659
12189	3340	Sisma X SLD	31	0	0	0	280.06	0.659	12190	3340	Sisma Y SLD	0	31	0	0	280.06	0.659
12191	3341	Sisma X SLV	32.7	0	0	0	2.9E2	0.659	12192	3341	Sisma Y SLV	0	32.7	0	0	2.9E2	0.659
12193	3341	Sisma X SLD	32.2	0	0	0	2.9E2	0.659	12194	3341	Sisma Y SLD	0	32.2	0	0	2.9E2	0.659
12195	3342	Sisma X SLV	32.7	0	0	0	2.9E2	0.659	12196	3342	Sisma Y SLV	0	32.7	0	0	2.9E2	0.659
12197	3342	Sisma X SLD	32.2	0	0	0	2.9E2	0.659	12198	3342	Sisma Y SLD	0	32.2	0	0	2.9E2	0.659
12199	3343	Sisma X SLV	33.5	0	0	0	3.0E2	0.659	12200	3343	Sisma Y SLV	0	33.5	0	0	3.0E2	0.659
12201	3343	Sisma X SLD	33	0	0	0	3.0E2	0.659	12202	3343	Sisma Y SLD	0	33	0	0	3.0E2	0.659

muratura

Indice	Nodo	Condizione	Fx	Fy	Fz	Mz	Peso	Gamma	Indice	Nodo	Condizione	Fx	Fy	Fz	Mz	Peso	Gamma
12203	3344	Sisma X SLV	33.5	0	0	0	3.0E2	0.659	12204	3344	Sisma Y SLV	0	33.5	0	0	3.0E2	0.659
12205	3344	Sisma X SLD	33	0	0	0	3.0E2	0.659	12206	3344	Sisma Y SLD	0	33	0	0	3.0E2	0.659
12207	3345	Sisma X SLV	34.9	0	0	0	3.1E2	0.659	12208	3345	Sisma Y SLV	0	34.9	0	0	3.1E2	0.659
12209	3345	Sisma X SLD	34.4	0	0	0	3.1E2	0.659	12210	3345	Sisma Y SLD	0	34.4	0	0	3.1E2	0.659
12211	3346	Sisma X SLV	34.9	0	0	0	3.1E2	0.659	12212	3346	Sisma Y SLV	0	34.9	0	0	3.1E2	0.659
12213	3346	Sisma X SLD	34.4	0	0	0	3.1E2	0.659	12214	3346	Sisma Y SLD	0	34.4	0	0	3.1E2	0.659
12215	3347	Sisma X SLV	36.5	0	0	0	3.2E2	0.659	12216	3347	Sisma Y SLV	0	36.5	0	0	3.2E2	0.659
12217	3347	Sisma X SLD	36	0	0	0	3.2E2	0.659	12218	3347	Sisma Y SLD	0	36	0	0	3.2E2	0.659
12219	3348	Sisma X SLV	36.5	0	0	0	3.2E2	0.659	12220	3348	Sisma Y SLV	0	36.5	0	0	3.2E2	0.659
12221	3348	Sisma X SLD	36	0	0	0	3.2E2	0.659	12222	3348	Sisma Y SLD	0	36	0	0	3.2E2	0.659
12223	3349	Sisma X SLV	37.6	0	0	0	3.3E2	0.659	12224	3349	Sisma Y SLV	0	37.6	0	0	3.3E2	0.659
12225	3349	Sisma X SLD	37	0	0	0	3.3E2	0.659	12226	3349	Sisma Y SLD	0	37	0	0	3.3E2	0.659
12227	3350	Sisma X SLV	37.6	0	0	0	3.3E2	0.659	12228	3350	Sisma Y SLV	0	37.6	0	0	3.3E2	0.659
12229	3350	Sisma X SLD	37	0	0	0	3.3E2	0.659	12230	3350	Sisma Y SLD	0	37	0	0	3.3E2	0.659
12231	3351	Sisma X SLV	38.3	0	0	0	3.4E2	0.659	12232	3351	Sisma Y SLV	0	38.3	0	0	3.4E2	0.659
12233	3351	Sisma X SLD	37.7	0	0	0	3.4E2	0.659	12234	3351	Sisma Y SLD	0	37.7	0	0	3.4E2	0.659
12235	3352	Sisma X SLV	38.3	0	0	0	3.4E2	0.659	12236	3352	Sisma Y SLV	0	38.3	0	0	3.4E2	0.659
12237	3352	Sisma X SLD	37.7	0	0	0	3.4E2	0.659	12238	3352	Sisma Y SLD	0	37.7	0	0	3.4E2	0.659
12239	3353	Sisma X SLV	38.8	0	0	0	3.5E2	0.659	12240	3353	Sisma Y SLV	0	38.8	0	0	3.5E2	0.659
12241	3353	Sisma X SLD	38.2	0	0	0	3.5E2	0.659	12242	3353	Sisma Y SLD	0	38.2	0	0	3.5E2	0.659
12243	3354	Sisma X SLV	38.8	0	0	0	3.5E2	0.659	12244	3354	Sisma Y SLV	0	38.8	0	0	3.5E2	0.659
12245	3354	Sisma X SLD	38.2	0	0	0	3.5E2	0.659	12246	3354	Sisma Y SLD	0	38.2	0	0	3.5E2	0.659
12247	3355	Sisma X SLV	39.1	0	0	0	347.45	0.659	12248	3355	Sisma Y SLV	0	39.1	0	0	347.45	0.659
12249	3355	Sisma X SLD	38.5	0	0	0	347.45	0.659	12250	3355	Sisma Y SLD	0	38.5	0	0	347.45	0.659
12251	3356	Sisma X SLV	39.1	0	0	0	347.45	0.659	12252	3356	Sisma Y SLV	0	39.1	0	0	347.45	0.659
12253	3356	Sisma X SLD	38.5	0	0	0	347.45	0.659	12254	3356	Sisma Y SLD	0	38.5	0	0	347.45	0.659
12255	3357	Sisma X SLV	39.2	0	0	0	3.5E2	0.659	12256	3357	Sisma Y SLV	0	39.2	0	0	3.5E2	0.659
12257	3357	Sisma X SLD	38.6	0	0	0	3.5E2	0.659	12258	3357	Sisma Y SLD	0	38.6	0	0	3.5E2	0.659
12259	3358	Sisma X SLV	39.2	0	0	0	3.5E2	0.659	12260	3358	Sisma Y SLV	0	39.2	0	0	3.5E2	0.659
12261	3358	Sisma X SLD	38.6	0	0	0	3.5E2	0.659	12262	3358	Sisma Y SLD	0	38.6	0	0	3.5E2	0.659
12263	3359	Sisma X SLV	39.2	0	0	0	3.5E2	0.659	12264	3359	Sisma Y SLV	0	39.2	0	0	3.5E2	0.659
12265	3359	Sisma X SLD	38.6	0	0	0	3.5E2	0.659	12266	3359	Sisma Y SLD	0	38.6	0	0	3.5E2	0.659
12267	3360	Sisma X SLV	39.2	0	0	0	3.5E2	0.659	12268	3360	Sisma Y SLV	0	39.2	0	0	3.5E2	0.659
12269	3360	Sisma X SLD	38.6	0	0	0	3.5E2	0.659	12270	3360	Sisma Y SLD	0	38.6	0	0	3.5E2	0.659
12271	3361	Sisma X SLV	39.2	0	0	0	3.5E2	0.659	12272	3361	Sisma Y SLV	0	39.2	0	0	3.5E2	0.659
12273	3361	Sisma X SLD	38.6	0	0	0	3.5E2	0.659	12274	3361	Sisma Y SLD	0	38.6	0	0	3.5E2	0.659
12275	3362	Sisma X SLV	39.2	0	0	0	3.5E2	0.659	12276	3362	Sisma Y SLV	0	39.2	0	0	3.5E2	0.659
12277	3362	Sisma X SLD	38.6	0	0	0	3.5E2	0.659	12278	3362	Sisma Y SLD	0	38.6	0	0	3.5E2	0.659
12279	3363	Sisma X SLV	54.6	0	0	0	4.9E2	0.659	12280	3363	Sisma Y SLV	0	54.6	0	0	4.9E2	0.659
12281	3363	Sisma X SLD	53.7	0	0	0	4.9E2	0.659	12282	3363	Sisma Y SLD	0	53.7	0	0	4.9E2	0.659
12283	3364	Sisma X SLV	54.8	0	0	0	4.9E2	0.659	12284	3364	Sisma Y SLV	0	54.8	0	0	4.9E2	0.659
12285	3364	Sisma X SLD	54	0	0	0	4.9E2	0.659	12286	3364	Sisma Y SLD	0	54	0	0	4.9E2	0.659
12287	3365	Sisma X SLV	36.7	0	0	0	3.3E2	0.659	12288	3365	Sisma Y SLV	0	36.7	0	0	3.3E2	0.659
12289	3365	Sisma X SLD	36.1	0	0	0	3.3E2	0.659	12290	3365	Sisma Y SLD	0	36.1	0	0	3.3E2	0.659
12291	3366	Sisma X SLV	36.7	0	0	0	3.3E2	0.659	12292	3366	Sisma Y SLV	0	36.7	0	0	3.3E2	0.659
12293	3366	Sisma X SLD	36.1	0	0	0	3.3E2	0.659	12294	3366	Sisma Y SLD	0	36.1	0	0	3.3E2	0.659
12295	3367	Sisma X SLV	36.7	0	0	0	3.3E2	0.659	12296	3367	Sisma Y SLV	0	36.7	0	0	3.3E2	0.659
12297	3367	Sisma X SLD	36.1	0	0	0	3.3E2	0.659	12298	3367	Sisma Y SLD	0	36.1	0	0	3.3E2	0.659
12299	3368	Sisma X SLV	36.6	0	0	0	3.3E2	0.659	12300	3368	Sisma Y SLV	0	36.6	0	0	3.3E2	0.659
12301	3368	Sisma X SLD	36.1	0	0	0	3.3E2	0.659	12302	3368	Sisma Y SLD	0	36.1	0	0	3.3E2	0.659
12303	3369	Sisma X SLV	36.6	0	0	0	325.2	0.659	12304	3369	Sisma Y SLV	0	36.6	0	0	325.2	0.659
12305	3369	Sisma X SLD	36	0	0	0	325.2	0.659	12306	3369	Sisma Y SLD	0	36	0	0	325.2	0.659
12307	3370	Sisma X SLV	36.5	0	0	0	3.2E2	0.659	12308	3370	Sisma Y SLV	0	36.5	0	0	3.2E2	0.659
12309	3370	Sisma X SLD	35.9	0	0	0	3.2E2	0.659	12310	3370	Sisma Y SLD	0	35.9	0	0	3.2E2	0.659
12311	3371	Sisma X SLV	36.3	0	0	0	3.2E2	0.659	12312	3371	Sisma Y SLV	0	36.3	0	0	3.2E2	0.659
12313	3371	Sisma X SLD	35.7	0	0	0	3.2E2	0.659	12314	3371	Sisma Y SLD	0	35.7	0	0	3.2E2	0.659
12315	3372	Sisma X SLV	36.1	0	0	0	3.2E2	0.659	12316	3372	Sisma Y SLV	0	36.1	0	0	3.2E2	0.659
12317	3372	Sisma X SLD	35.5	0	0	0	3.2E2	0.659	12318	3372	Sisma Y SLD	0	35.5	0	0	3.2E2	0.659
12319	3373	Sisma X SLV	36.1	0	0	0	3.2E2	0.659	12320	3373	Sisma Y SLV	0	36.1	0	0	3.2E2	0.659
12321	3373	Sisma X SLD	35.5	0	0	0	3.2E2	0.659	12322	3373	Sisma Y SLD	0	35.5	0	0	3.2E2	0.659
12323	3374	Sisma X SLV	36.3	0	0	0	3.2E2	0.659	12324	3374	Sisma Y SLV	0	36.3	0	0	3.2E2	0.659
12325	3374	Sisma X SLD	35.7	0	0	0	3.2E2	0.659	12326	3374	Sisma Y SLD	0	35.7	0	0	3.2E2	0.659
12327	3375	Sisma X SLV	36.6	0	0	0	3.3E2	0.659	12328	3375	Sisma Y SLV	0	36.6	0	0	3.3E2	0.659
12329	3375	Sisma X SLD	36	0	0	0	3.3E2	0.659	12330	3375	Sisma Y SLD	0	36	0	0	3.3E2	0.659
12331	3376	Sisma X SLV	40.4	0	0	0	3.6E2	0.659	12332	3376	Sisma Y SLV	0	40.4	0	0	3.6E2	0.659
12333	3376	Sisma X SLD	39.8	0	0	0	3.6E2	0.659	12334	3376	Sisma Y SLD	0	39.8	0	0	3.6E2	0.659
12335	3377	Sisma X SLV	47.6	0	0	0	4.2E2	0.659	12336	3377	Sisma Y SLV	0	47.6	0	0	4.2E2	0.659
12337	3377	Sisma X SLD	46.9	0	0	0	4.2E2	0.659	12338	3377	Sisma Y SLD	0	46.9	0	0	4.2E2	0.659
12339	3378	Sisma X SLV	46.7	0	0	0	4.2E2	0.659	12340	3378	Sisma Y SLV	0	46.7	0	0	4.2E2	0.659
12341	3378	Sisma X SLD	46	0	0	0	4.2E2	0.659	12342	3378	Sisma Y SLD	0	46	0	0	4.2E2	0.659
12343	3379	Sisma X SLV	40.7	0	0	0	3.6E2	0.659	12344	3379	Sisma Y SLV	0	40.7	0	0	3.6E2	0.659
12345	3379	Sisma X SLD	40.1	0	0	0	3.6E2	0.659	12346	3379	Sisma Y SLD	0	40.1	0	0	3.6E2	0.659
12347	3380	Sisma X SLV	40.7	0	0	0	3.6E2	0.659	12348	3380	Sisma Y SLV	0	40.7	0	0	3.6E2	0.659
12349	3380	Sisma X SLD	40	0	0	0	3.6E2	0.659	12350	3380	Sisma Y SLD	0	40	0	0	3.6E2	0.659
12351	3381	Sisma X SLV	40.6	0	0	0	3.6E2	0.659	12352	3381	Sisma Y SLV	0	40.6	0	0	3.6E2	0.659
12353	3381	Sisma X SLD	39.9	0	0	0	3.6E2	0.659	12354	3381	Sisma Y SLD	0	39.9	0	0	3.6E2	0.659
12355	3382	Sisma X SLV	40.3	0	0	0	3.6E2	0.659	12356	3382	Sisma Y SLV	0	40.3	0	0	3.6E2	0.659
12357	3382	Sisma X SLD	39.7	0	0	0	3.6E2	0.659	12358	3382	Sisma Y SLD	0	39.7	0	0	3.6E2	0.659
12359	3383	Sisma X SLV	39.8	0	0	0	3.5E2	0.659	12360	3383	Sisma Y SLV	0	39.8	0	0	3.5E2	0.659
12361	3383	Sisma X SLD	39.2	0	0	0	3.5E2	0.659	12362	3383	Sisma Y SLD	0	39.2	0	0	3.5E2	0.659
12363	3384	Sisma X SLV	39	0	0	0	3.5E2	0.659	12364	3384	Sisma Y SLV	0	39	0	0	3.5E2	0.659
12365	3384	Sisma X SLD	38.4	0	0	0	3.5E2	0.659	12366	3384	Sisma Y SLD	0	38.4	0	0	3.5E2	0.659
12367	3385	Sisma X SLV	38.2	0	0	0	3.4E2	0.659	12368	3385	Sisma Y SLV	0	38.2	0	0	3.4E2	0.659
12369	3385	Sisma X SLD	37.6	0	0	0	3.4E2	0.659	12370	3385	Sisma Y SLD	0	37.6	0	0	3.4E2	0.659
12371	3386	Sisma X SLV	37.7	0	0	0	3.3E2	0.659	12372	3386	Sisma Y SLV	0	37.7	0	0	3.3E2	0.659
12373	3386	Sisma X SLD	37.1	0	0	0	3.3E2	0.659	12374	3386	Sisma Y SLD	0	37.1	0	0	3.3E2	0.659
12375	3387	Sisma X SLV	37.4	0	0	0	3.3E2	0.659	12376	3387	Sisma Y SLV	0	37.4	0	0	3.3E2	0.659
12377	3387	Sisma X SLD	36.8	0	0	0	3.3E2	0.659	12378	3387	Sisma Y SLD	0	36.8	0	0	3.3E2	0.659
12379	3388	Sisma X SLV	37.3	0	0	0	3.3E2	0.659	12380	3388	Sisma Y SLV	0	37.3	0	0	3.3E2	0.659
12381	3388	Sisma X SLD	36.7	0	0	0	3.3E2	0.659	12382	3388	Sisma Y SLD	0	36.7	0	0	3.3E2	0.659
12383	3389	Sisma X SLV	32.4	0	0	0	288.35	0.659	12384	3389	Sisma Y SLV	0	32.4	0	0	288.35	0.659
12385	3389	Sisma X SLD	31.9	0	0	0	288.35	0.659	12386	3389	Sisma Y SLD	0	31.9	0	0	288.35	0.659
12387	3390	Sisma X SLV	31.1	0	0	0	2.8E2	0.659	12388	3390	Sisma Y SLV	0	31.1	0	0	2.8E2	0.659
12389	3390	Sisma X SLD	30.6	0	0	0	2.8E2	0.659	12390	3390	Sisma Y SLD	0	30.6	0	0	2.8E2	0.659
12391	3391	Sisma X SLV	31.1	0	0	0	2.8E2	0.659	12392	3391	Sisma Y SLV	0	31.1	0	0	2.8E2	0.659
12393	3391	Sisma X SLD	30.6	0	0	0	2.8E2	0.659	12394	3391	Sisma Y SLD	0	30.6	0	0	2.8E2	0.659
12395	3392	Sisma X SLV	52.1	0	0	0	4.6E2	0.659	12396	3392	Sisma Y SLV	0	52.1	0	0	4.6E2	0.659
12397	3392	Sisma X SLD	51.3	0	0	0	4.6E2	0.659	12398	3392	Sisma Y SLD	0	51.3	0	0	4.6E2	0.659
12399	3393	Sisma X SLV	52.4	0	0	0	465.93	0.659	12400	3393	Sisma Y SLV	0	52.4	0	0	465.93	0.659
12401	3393	Sisma X SLD	51.6	0	0	0	465.93	0.659	12402	3393	Sisma Y SLD	0	51.6	0	0	465.93	0.659
12403	3394	Sisma X SLV	32.3	0	0	0	2.9E2	0.659	12404	3394	Sisma Y SLV	0	32.3	0	0	2.9E2	0.659

Indice	Nodo	Condizione	Fx	Fy	Fz	Mz	Peso	Gamma	Indice	Nodo	Condizione	Fx	Fy	Fz	Mz	Peso	Gamma
12405	3394	Sisma X SLD	31.8	0	0	0	2.9E2	0.659	12406	3394	Sisma Y SLD	0	31.8	0	0	2.9E2	0.659
12407	3395	Sisma X SLV	32.5	0	0	0	2.9E2	0.659	12408	3395	Sisma Y SLV	0	32.5	0	0	2.9E2	0.659
12409	3395	Sisma X SLD	32	0	0	0	2.9E2	0.659	12410	3395	Sisma Y SLD	0	32	0	0	2.9E2	0.659
12411	3396	Sisma X SLV	16.7	0	0	0	1.5E2	0.66	12412	3396	Sisma Y SLV	0	16.7	0	0	1.5E2	0.66
12413	3396	Sisma X SLD	16.4	0	0	0	1.5E2	0.66	12414	3396	Sisma Y SLD	0	16.4	0	0	1.5E2	0.66
12415	3397	Sisma X SLV	16.7	0	0	0	1.5E2	0.66	12416	3397	Sisma Y SLV	0	16.7	0	0	1.5E2	0.66
12417	3397	Sisma X SLD	16.4	0	0	0	1.5E2	0.66	12418	3397	Sisma Y SLD	0	16.4	0	0	1.5E2	0.66
12419	3398	Sisma X SLV	31.4	0	0	0	2.8E2	0.66	12420	3398	Sisma Y SLV	0	31.4	0	0	2.8E2	0.66
12421	3398	Sisma X SLD	30.9	0	0	0	2.8E2	0.66	12422	3398	Sisma Y SLD	0	30.9	0	0	2.8E2	0.66
12423	3399	Sisma X SLV	18.1	0	0	0	160.3	0.66	12424	3399	Sisma Y SLV	0	18.1	0	0	160.3	0.66
12425	3399	Sisma X SLD	17.8	0	0	0	160.3	0.66	12426	3399	Sisma Y SLD	0	17.8	0	0	160.3	0.66
12427	3400	Sisma X SLV	36.2	0	0	0	3.2E2	0.66	12428	3400	Sisma Y SLV	0	36.2	0	0	3.2E2	0.66
12429	3400	Sisma X SLD	35.6	0	0	0	3.2E2	0.66	12430	3400	Sisma Y SLD	0	35.6	0	0	3.2E2	0.66
12431	3401	Sisma X SLV	17	0	0	0	1.5E2	0.66	12432	3401	Sisma Y SLV	0	17	0	0	1.5E2	0.66
12433	3401	Sisma X SLD	16.7	0	0	0	1.5E2	0.66	12434	3401	Sisma Y SLD	0	16.7	0	0	1.5E2	0.66
12435	3402	Sisma X SLV	35.6	0	0	0	3.2E2	0.66	12436	3402	Sisma Y SLV	0	35.6	0	0	3.2E2	0.66
12437	3402	Sisma X SLD	35	0	0	0	3.2E2	0.66	12438	3402	Sisma Y SLD	0	35	0	0	3.2E2	0.66
12439	3403	Sisma X SLV	16.6	0	0	0	1.5E2	0.66	12440	3403	Sisma Y SLV	0	16.6	0	0	1.5E2	0.66
12441	3403	Sisma X SLD	16.3	0	0	0	1.5E2	0.66	12442	3403	Sisma Y SLD	0	16.3	0	0	1.5E2	0.66
12443	3404	Sisma X SLV	16.6	0	0	0	1.5E2	0.66	12444	3404	Sisma Y SLV	0	16.6	0	0	1.5E2	0.66
12445	3404	Sisma X SLD	16.3	0	0	0	1.5E2	0.66	12446	3404	Sisma Y SLD	0	16.3	0	0	1.5E2	0.66
12447	3405	Sisma X SLV	37.5	0	0	0	3.3E2	0.661	12448	3405	Sisma Y SLV	0	37.5	0	0	3.3E2	0.661
12449	3405	Sisma X SLD	37	0	0	0	3.3E2	0.661	12450	3405	Sisma Y SLD	0	37	0	0	3.3E2	0.661
12451	3406	Sisma X SLV	31.3	0	0	0	2.8E2	0.661	12452	3406	Sisma Y SLV	0	31.3	0	0	2.8E2	0.661
12453	3406	Sisma X SLD	30.8	0	0	0	2.8E2	0.661	12454	3406	Sisma Y SLD	0	30.8	0	0	2.8E2	0.661
12455	3407	Sisma X SLV	17.9	0	0	0	1.6E2	0.661	12456	3407	Sisma Y SLV	0	17.9	0	0	1.6E2	0.661
12457	3407	Sisma X SLD	17.6	0	0	0	1.6E2	0.661	12458	3407	Sisma Y SLD	0	17.6	0	0	1.6E2	0.661
12459	3408	Sisma X SLV	18.5	0	0	0	1.6E2	0.661	12460	3408	Sisma Y SLV	0	18.5	0	0	1.6E2	0.661
12461	3408	Sisma X SLD	18.2	0	0	0	1.6E2	0.661	12462	3408	Sisma Y SLD	0	18.2	0	0	1.6E2	0.661
12463	3409	Sisma X SLV	34.7	0	0	0	3.1E2	0.661	12464	3409	Sisma Y SLV	0	34.7	0	0	3.1E2	0.661
12465	3409	Sisma X SLD	34.1	0	0	0	3.1E2	0.661	12466	3409	Sisma Y SLD	0	34.1	0	0	3.1E2	0.661
12467	3410	Sisma X SLV	16.5	0	0	0	1.5E2	0.661	12468	3410	Sisma Y SLV	0	16.5	0	0	1.5E2	0.661
12469	3410	Sisma X SLD	16.2	0	0	0	1.5E2	0.661	12470	3410	Sisma Y SLD	0	16.2	0	0	1.5E2	0.661
12471	3411	Sisma X SLV	16.5	0	0	0	1.5E2	0.661	12472	3411	Sisma Y SLV	0	16.5	0	0	1.5E2	0.661
12473	3411	Sisma X SLD	16.2	0	0	0	1.5E2	0.661	12474	3411	Sisma Y SLD	0	16.2	0	0	1.5E2	0.661
12475	3412	Sisma X SLV	35.6	0	0	0	315.52	0.661	12476	3412	Sisma Y SLV	0	35.6	0	0	315.52	0.661
12477	3412	Sisma X SLD	35	0	0	0	315.52	0.661	12478	3412	Sisma Y SLD	0	35	0	0	315.52	0.661
12479	3413	Sisma X SLV	16.9	0	0	0	1.5E2	0.661	12480	3413	Sisma Y SLV	0	16.9	0	0	1.5E2	0.661
12481	3413	Sisma X SLD	16.6	0	0	0	1.5E2	0.661	12482	3413	Sisma Y SLD	0	16.6	0	0	1.5E2	0.661
12483	3414	Sisma X SLV	35.3	0	0	0	3.1E2	0.662	12484	3414	Sisma Y SLV	0	35.3	0	0	3.1E2	0.662
12485	3414	Sisma X SLD	34.8	0	0	0	3.1E2	0.662	12486	3414	Sisma Y SLD	0	34.8	0	0	3.1E2	0.662
12487	3415	Sisma X SLV	31.1	0	0	0	2.8E2	0.662	12488	3415	Sisma Y SLV	0	31.1	0	0	2.8E2	0.662
12489	3415	Sisma X SLD	30.6	0	0	0	2.8E2	0.662	12490	3415	Sisma Y SLD	0	30.6	0	0	2.8E2	0.662
12491	3416	Sisma X SLV	32	0	0	0	2.8E2	0.662	12492	3416	Sisma Y SLV	0	32	0	0	2.8E2	0.662
12493	3416	Sisma X SLD	31.5	0	0	0	2.8E2	0.662	12494	3416	Sisma Y SLD	0	31.5	0	0	2.8E2	0.662
12495	3417	Sisma X SLV	16.4	0	0	0	145.25	0.662	12496	3417	Sisma Y SLV	0	16.4	0	0	145.25	0.662
12497	3417	Sisma X SLD	16.1	0	0	0	145.25	0.662	12498	3417	Sisma Y SLD	0	16.1	0	0	145.25	0.662
12499	3418	Sisma X SLV	16.4	0	0	0	145.25	0.662	12500	3418	Sisma Y SLV	0	16.4	0	0	145.25	0.662
12501	3418	Sisma X SLD	16.1	0	0	0	145.25	0.662	12502	3418	Sisma Y SLD	0	16.1	0	0	145.25	0.662
12503	3419	Sisma X SLV	17.7	0	0	0	1.6E2	0.662	12504	3419	Sisma Y SLV	0	17.7	0	0	1.6E2	0.662
12505	3419	Sisma X SLD	17.4	0	0	0	1.6E2	0.662	12506	3419	Sisma Y SLD	0	17.4	0	0	1.6E2	0.662
12507	3420	Sisma X SLV	37.3	0	0	0	3.3E2	0.662	12508	3420	Sisma Y SLV	0	37.3	0	0	3.3E2	0.662
12509	3420	Sisma X SLD	36.7	0	0	0	3.3E2	0.662	12510	3420	Sisma Y SLD	0	36.7	0	0	3.3E2	0.662
12511	3421	Sisma X SLV	13.8	0	0	0	1.2E2	0.662	12512	3421	Sisma Y SLV	0	13.8	0	0	1.2E2	0.662
12513	3421	Sisma X SLD	13.6	0	0	0	1.2E2	0.662	12514	3421	Sisma Y SLD	0	13.6	0	0	1.2E2	0.662
12515	3422	Sisma X SLV	30.9	0	0	0	2.7E2	0.663	12516	3422	Sisma Y SLV	0	30.9	0	0	2.7E2	0.663
12517	3422	Sisma X SLD	30.4	0	0	0	2.7E2	0.663	12518	3422	Sisma Y SLD	0	30.4	0	0	2.7E2	0.663
12519	3423	Sisma X SLV	36	0	0	0	3.2E2	0.663	12520	3423	Sisma Y SLV	0	36	0	0	3.2E2	0.663
12521	3423	Sisma X SLD	35.5	0	0	0	3.2E2	0.663	12522	3423	Sisma Y SLD	0	35.5	0	0	3.2E2	0.663
12523	3424	Sisma X SLV	39.4	0	0	0	3.5E2	0.663	12524	3424	Sisma Y SLV	0	39.4	0	0	3.5E2	0.663
12525	3424	Sisma X SLD	38.8	0	0	0	3.5E2	0.663	12526	3424	Sisma Y SLD	0	38.8	0	0	3.5E2	0.663
12527	3425	Sisma X SLV	36.4	0	0	0	3.2E2	0.663	12528	3425	Sisma Y SLV	0	36.4	0	0	3.2E2	0.663
12529	3425	Sisma X SLD	35.8	0	0	0	3.2E2	0.663	12530	3425	Sisma Y SLD	0	35.8	0	0	3.2E2	0.663
12531	3426	Sisma X SLV	35.2	0	0	0	3.1E2	0.663	12532	3426	Sisma Y SLV	0	35.2	0	0	3.1E2	0.663
12533	3426	Sisma X SLD	34.6	0	0	0	3.1E2	0.663	12534	3426	Sisma Y SLD	0	34.6	0	0	3.1E2	0.663
12535	3427	Sisma X SLV	30.8	0	0	0	2.7E2	0.663	12536	3427	Sisma Y SLV	0	30.8	0	0	2.7E2	0.663
12537	3427	Sisma X SLD	30.3	0	0	0	2.7E2	0.663	12538	3427	Sisma Y SLD	0	30.3	0	0	2.7E2	0.663
12539	3428	Sisma X SLV	16.7	0	0	0	1.5E2	0.663	12540	3428	Sisma Y SLV	0	16.7	0	0	1.5E2	0.663
12541	3428	Sisma X SLD	16.5	0	0	0	1.5E2	0.663	12542	3428	Sisma Y SLD	0	16.5	0	0	1.5E2	0.663
12543	3429	Sisma X SLV	16.1	0	0	0	1.4E2	0.663	12544	3429	Sisma Y SLV	0	16.1	0	0	1.4E2	0.663
12545	3429	Sisma X SLD	15.9	0	0	0	1.4E2	0.663	12546	3429	Sisma Y SLD	0	15.9	0	0	1.4E2	0.663
12547	3430	Sisma X SLV	16.1	0	0	0	1.4E2	0.663	12548	3430	Sisma Y SLV	0	16.1	0	0	1.4E2	0.663
12549	3430	Sisma X SLD	15.9	0	0	0	1.4E2	0.663	12550	3430	Sisma Y SLD	0	15.9	0	0	1.4E2	0.663
12551	3431	Sisma X SLV	16.3	0	0	0	1.4E2	0.663	12552	3431	Sisma Y SLV	0	16.3	0	0	1.4E2	0.663
12553	3431	Sisma X SLD	16	0	0	0	1.4E2	0.663	12554	3431	Sisma Y SLD	0	16	0	0	1.4E2	0.663
12555	3432	Sisma X SLV	16.3	0	0	0	1.4E2	0.663	12556	3432	Sisma Y SLV	0	16.3	0	0	1.4E2	0.663
12557	3432	Sisma X SLD	16	0	0	0	1.4E2	0.663	12558	3432	Sisma Y SLD	0	16	0	0	1.4E2	0.663
12559	3433	Sisma X SLV	34.6	0	0	0	3.1E2	0.663	12560	3433	Sisma Y SLV	0	34.6	0	0	3.1E2	0.663
12561	3433	Sisma X SLD	34.1	0	0	0	3.1E2	0.663	12562	3433	Sisma Y SLD	0	34.1	0	0	3.1E2	0.663
12563	3434	Sisma X SLV	15.8	0	0	0	1.4E2	0.663	12564	3434	Sisma Y SLV	0	15.8	0	0	1.4E2	0.663
12565	3434	Sisma X SLD	15.6	0	0	0	1.4E2	0.663	12566	3434	Sisma Y SLD	0	15.6	0	0	1.4E2	0.663
12567	3435	Sisma X SLV	18.2	0	0	0	1.6E2	0.663	12568	3435	Sisma Y SLV	0	18.2	0	0	1.6E2	0.663
12569	3435	Sisma X SLD	17.9	0	0	0	1.6E2	0.663	12570	3435	Sisma Y SLD	0	17.9	0	0	1.6E2	0.663
12571	3436	Sisma X SLV	32	0	0	0	2.8E2	0.663	12572	3436	Sisma Y SLV	0	32	0	0	2.8E2	0.663
12573	3436	Sisma X SLD	31.5	0	0	0	2.8E2	0.663	12574	3436	Sisma Y SLD	0	31.5	0	0	2.8E2	0.663
12575	3437	Sisma X SLV	17.5	0	0	0	1.5E2	0.663	12576	3437	Sisma Y SLV	0	17.5	0	0	1.5E2	0.663
12577	3437	Sisma X SLD	17.2	0	0	0	1.5E2	0.663	12578	3437	Sisma Y SLD	0	17.2	0	0	1.5E2	0.663
12579	3438	Sisma X SLV	30.7	0	0	0	270.76	0.664	12580	3438	Sisma Y SLV	0	30.7	0	0	270.76	0.664
12581	3438	Sisma X SLD	30.2	0	0	0	270.76	0.664	12582	3438	Sisma Y SLD	0	30.2	0	0	270.76	0.664
12583	3439	Sisma X SLV	37	0	0	0	3.3E2	0.664	12584	3439	Sisma Y SLV	0	37	0	0	3.3E2	0.664
12585	3439	Sisma X SLD	36.4	0	0	0	3.3E2	0.664	12586	3439	Sisma Y SLD	0	36.4	0	0	3.3E2	0.664
12587	3440	Sisma X SLV	31.5	0	0	0	2.8E2	0.664	12588	3440	Sisma Y SLV	0	31.5	0	0	2.8E2	0.664
12589	3440	Sisma X SLD	31	0	0	0	2.8E2	0.664	12590	3440	Sisma Y SLD	0	31	0	0	2.8E2	0.664
12591	3441	Sisma X SLV	16.1	0	0	0	142.42	0.664	12592	3441	Sisma Y SLV	0	16.1	0	0	142.42	0.664
12593	3441	Sisma X SLD	15.9	0	0	0	142.42	0.664	12594	3441	Sisma Y SLD	0	15.9	0	0	142.42	0.664
12595	3442	Sisma X SLV	16.1	0	0	0	142.42	0.664	12596	3442	Sisma Y SLV	0	16.1	0	0	142.42	0.664
12597	3442	Sisma X SLD	15.9	0	0	0	142.42	0.664	12598	3442	Sisma Y SLD	0	15.9	0	0	142.42	0.664
12599	3443	Sisma X SLV	34.8	0	0	0	3.1E2	0.664	12600	3443	Sisma Y SLV	0	34.8	0	0	3.1E2	0.664
12601	3443	Sisma X SLD	34.2	0	0	0	3.1E2	0.664	12602	3443	Sisma Y SLD	0	34.2	0	0	3.1E2	0.664
12603	3444	Sisma X SLV	16.6	0	0	0	1.5E2	0.664	12604	3444	Sisma Y SLV	0	16.6	0	0	1.5E2	0.664
12605	3444	Sisma X SLD	16.3	0	0	0	1.5E2	0.664	12606	3444	Sisma Y SLD	0	16.3	0	0	1.5E2	0.664
12607	3445	Sisma X SLV	33	0	0	0	2.9E2	0.664	12608	3445	Sisma Y SLV	0	33	0	0	2.9E2	0.664
12609	3445	Sisma X SLD	32.5	0	0	0	2.9E2	0.664	12610	3445	Sisma Y SLD	0	32.5	0	0	2.9E2	0.664
12611	3446	Sisma X SLV	17.1	0	0	0	1.5E2	0.665	12612	3446	Sisma Y SLV	0	17.1	0	0	1.5E2	0.665

Indice	Nodo	Condizione	Fx	Fy	Fz	Mz	Peso	Gamma	Indice	Nodo	Condizione	Fx	Fy	Fz	Mz	Peso	Gamma
12613	3446	Sisma X SLD	16.9	0	0	0	1.5E2	0.665	12614	3446	Sisma Y SLD	0	16.9	0	0	1.5E2	0.665
12615	3447	Sisma X SLV	30.4	0	0	0	267.68	0.665	12616	3447	Sisma Y SLV	0	30.4	0	0	267.68	0.665
12617	3447	Sisma X SLD	29.9	0	0	0	267.68	0.665	12618	3447	Sisma Y SLD	0	29.9	0	0	267.68	0.665
12619	3448	Sisma X SLV	17.8	0	0	0	1.6E2	0.665	12620	3448	Sisma Y SLV	0	17.8	0	0	1.6E2	0.665
12621	3448	Sisma X SLD	17.5	0	0	0	1.6E2	0.665	12622	3448	Sisma Y SLD	0	17.5	0	0	1.6E2	0.665
12623	3449	Sisma X SLV	30.6	0	0	0	2.7E2	0.665	12624	3449	Sisma Y SLV	0	30.6	0	0	2.7E2	0.665
12625	3449	Sisma X SLD	30.1	0	0	0	2.7E2	0.665	12626	3449	Sisma Y SLD	0	30.1	0	0	2.7E2	0.665
12627	3450	Sisma X SLV	13.6	0	0	0	1.2E2	0.665	12628	3450	Sisma Y SLV	0	13.6	0	0	1.2E2	0.665
12629	3450	Sisma X SLD	13.4	0	0	0	1.2E2	0.665	12630	3450	Sisma Y SLD	0	13.4	0	0	1.2E2	0.665
12631	3451	Sisma X SLV	16	0	0	0	1.4E2	0.665	12632	3451	Sisma Y SLV	0	16	0	0	1.4E2	0.665
12633	3451	Sisma X SLD	15.7	0	0	0	1.4E2	0.665	12634	3451	Sisma Y SLD	0	15.7	0	0	1.4E2	0.665
12635	3452	Sisma X SLV	16	0	0	0	1.4E2	0.665	12636	3452	Sisma Y SLV	0	16	0	0	1.4E2	0.665
12637	3452	Sisma X SLD	15.7	0	0	0	1.4E2	0.665	12638	3452	Sisma Y SLD	0	15.7	0	0	1.4E2	0.665
12639	3453	Sisma X SLV	36.8	0	0	0	3.2E2	0.665	12640	3453	Sisma Y SLV	0	36.8	0	0	3.2E2	0.665
12641	3453	Sisma X SLD	36.3	0	0	0	3.2E2	0.665	12642	3453	Sisma Y SLD	0	36.3	0	0	3.2E2	0.665
12643	3454	Sisma X SLV	15.8	0	0	0	1.4E2	0.666	12644	3454	Sisma Y SLV	0	15.8	0	0	1.4E2	0.666
12645	3454	Sisma X SLD	15.6	0	0	0	1.4E2	0.666	12646	3454	Sisma Y SLD	0	15.6	0	0	1.4E2	0.666
12647	3455	Sisma X SLV	15.8	0	0	0	1.4E2	0.666	12648	3455	Sisma Y SLV	0	15.8	0	0	1.4E2	0.666
12649	3455	Sisma X SLD	15.6	0	0	0	1.4E2	0.666	12650	3455	Sisma Y SLD	0	15.6	0	0	1.4E2	0.666
12651	3456	Sisma X SLV	34	0	0	0	3.0E2	0.666	12652	3456	Sisma Y SLV	0	34	0	0	3.0E2	0.666
12653	3456	Sisma X SLD	33.4	0	0	0	3.0E2	0.666	12654	3456	Sisma Y SLD	0	33.4	0	0	3.0E2	0.666
12655	3457	Sisma X SLV	34.4	0	0	0	3.0E2	0.666	12656	3457	Sisma Y SLV	0	34.4	0	0	3.0E2	0.666
12657	3457	Sisma X SLD	33.8	0	0	0	3.0E2	0.666	12658	3457	Sisma Y SLD	0	33.8	0	0	3.0E2	0.666
12659	3458	Sisma X SLV	38.2	0	0	0	3.4E2	0.666	12660	3458	Sisma Y SLV	0	38.2	0	0	3.4E2	0.666
12661	3458	Sisma X SLD	37.6	0	0	0	3.4E2	0.666	12662	3458	Sisma Y SLD	0	37.6	0	0	3.4E2	0.666
12663	3459	Sisma X SLV	35.1	0	0	0	309.2	0.666	12664	3459	Sisma Y SLV	0	35.1	0	0	309.2	0.666
12665	3459	Sisma X SLD	34.6	0	0	0	309.2	0.666	12666	3459	Sisma Y SLD	0	34.6	0	0	309.2	0.666
12667	3460	Sisma X SLV	30	0	0	0	2.6E2	0.666	12668	3460	Sisma Y SLV	0	30	0	0	2.6E2	0.666
12669	3460	Sisma X SLD	29.6	0	0	0	2.6E2	0.666	12670	3460	Sisma Y SLD	0	29.6	0	0	2.6E2	0.666
12671	3461	Sisma X SLV	16.4	0	0	0	1.4E2	0.666	12672	3461	Sisma Y SLV	0	16.4	0	0	1.4E2	0.666
12673	3461	Sisma X SLD	16.1	0	0	0	1.4E2	0.666	12674	3461	Sisma Y SLD	0	16.1	0	0	1.4E2	0.666
12675	3462	Sisma X SLV	31.3	0	0	0	2.8E2	0.666	12676	3462	Sisma Y SLV	0	31.3	0	0	2.8E2	0.666
12677	3462	Sisma X SLD	30.8	0	0	0	2.8E2	0.666	12678	3462	Sisma Y SLD	0	30.8	0	0	2.8E2	0.666
12679	3463	Sisma X SLV	31.2	0	0	0	2.7E2	0.666	12680	3463	Sisma Y SLV	0	31.2	0	0	2.7E2	0.666
12681	3463	Sisma X SLD	30.7	0	0	0	2.7E2	0.666	12682	3463	Sisma Y SLD	0	30.7	0	0	2.7E2	0.666
12683	3464	Sisma X SLV	16.6	0	0	0	1.5E2	0.666	12684	3464	Sisma Y SLV	0	16.6	0	0	1.5E2	0.666
12685	3464	Sisma X SLD	16.4	0	0	0	1.5E2	0.666	12686	3464	Sisma Y SLD	0	16.4	0	0	1.5E2	0.666
12687	3465	Sisma X SLV	30	0	0	0	2.6E2	0.666	12688	3465	Sisma Y SLV	0	30	0	0	2.6E2	0.666
12689	3465	Sisma X SLD	29.6	0	0	0	2.6E2	0.666	12690	3465	Sisma Y SLD	0	29.6	0	0	2.6E2	0.666
12691	3466	Sisma X SLV	15.8	0	0	0	1.4E2	0.666	12692	3466	Sisma Y SLV	0	15.8	0	0	1.4E2	0.666
12693	3466	Sisma X SLD	15.5	0	0	0	1.4E2	0.666	12694	3466	Sisma Y SLD	0	15.5	0	0	1.4E2	0.666
12695	3467	Sisma X SLV	15.8	0	0	0	1.4E2	0.666	12696	3467	Sisma Y SLV	0	15.8	0	0	1.4E2	0.666
12697	3467	Sisma X SLD	15.5	0	0	0	1.4E2	0.666	12698	3467	Sisma Y SLD	0	15.5	0	0	1.4E2	0.666
12699	3468	Sisma X SLV	17.3	0	0	0	1.5E2	0.667	12700	3468	Sisma Y SLV	0	17.3	0	0	1.5E2	0.667
12701	3468	Sisma X SLD	17	0	0	0	1.5E2	0.667	12702	3468	Sisma Y SLD	0	17	0	0	1.5E2	0.667
12703	3469	Sisma X SLV	29.9	0	0	0	2.6E2	0.667	12704	3469	Sisma Y SLV	0	29.9	0	0	2.6E2	0.667
12705	3469	Sisma X SLD	29.4	0	0	0	2.6E2	0.667	12706	3469	Sisma Y SLD	0	29.4	0	0	2.6E2	0.667
12707	3470	Sisma X SLV	36.8	0	0	0	3.2E2	0.667	12708	3470	Sisma Y SLV	0	36.8	0	0	3.2E2	0.667
12709	3470	Sisma X SLD	36.2	0	0	0	3.2E2	0.667	12710	3470	Sisma Y SLD	0	36.2	0	0	3.2E2	0.667
12711	3471	Sisma X SLV	15.7	0	0	0	137.57	0.667	12712	3471	Sisma Y SLV	0	15.7	0	0	137.57	0.667
12713	3471	Sisma X SLD	15.4	0	0	0	137.57	0.667	12714	3471	Sisma Y SLD	0	15.4	0	0	137.57	0.667
12715	3472	Sisma X SLV	15.7	0	0	0	137.57	0.667	12716	3472	Sisma Y SLV	0	15.7	0	0	137.57	0.667
12717	3472	Sisma X SLD	15.4	0	0	0	137.57	0.667	12718	3472	Sisma Y SLD	0	15.4	0	0	137.57	0.667
12719	3473	Sisma X SLV	15.7	0	0	0	1.4E2	0.667	12720	3473	Sisma Y SLV	0	15.7	0	0	1.4E2	0.667
12721	3473	Sisma X SLD	15.4	0	0	0	1.4E2	0.667	12722	3473	Sisma Y SLD	0	15.4	0	0	1.4E2	0.667
12723	3474	Sisma X SLV	15.7	0	0	0	1.4E2	0.667	12724	3474	Sisma Y SLV	0	15.7	0	0	1.4E2	0.667
12725	3474	Sisma X SLD	15.4	0	0	0	1.4E2	0.667	12726	3474	Sisma Y SLD	0	15.4	0	0	1.4E2	0.667
12727	3475	Sisma X SLV	34.1	0	0	0	3.0E2	0.667	12728	3475	Sisma Y SLV	0	34.1	0	0	3.0E2	0.667
12729	3475	Sisma X SLD	33.5	0	0	0	3.0E2	0.667	12730	3475	Sisma Y SLD	0	33.5	0	0	3.0E2	0.667
12731	3476	Sisma X SLV	13.6	0	0	0	1.2E2	0.667	12732	3476	Sisma Y SLV	0	13.6	0	0	1.2E2	0.667
12733	3476	Sisma X SLD	13.4	0	0	0	1.2E2	0.667	12734	3476	Sisma Y SLD	0	13.4	0	0	1.2E2	0.667
12735	3477	Sisma X SLV	16.2	0	0	0	1.4E2	0.667	12736	3477	Sisma Y SLV	0	16.2	0	0	1.4E2	0.667
12737	3477	Sisma X SLD	15.9	0	0	0	1.4E2	0.667	12738	3477	Sisma Y SLD	0	15.9	0	0	1.4E2	0.667
12739	3478	Sisma X SLV	30.2	0	0	0	2.7E2	0.668	12740	3478	Sisma Y SLV	0	30.2	0	0	2.7E2	0.668
12741	3478	Sisma X SLD	29.7	0	0	0	2.7E2	0.668	12742	3478	Sisma Y SLD	0	29.7	0	0	2.7E2	0.668
12743	3479	Sisma X SLV	16	0	0	0	1.4E2	0.668	12744	3479	Sisma Y SLV	0	16	0	0	1.4E2	0.668
12745	3479	Sisma X SLD	15.7	0	0	0	1.4E2	0.668	12746	3479	Sisma Y SLD	0	15.7	0	0	1.4E2	0.668
12747	3480	Sisma X SLV	29.7	0	0	0	2.6E2	0.668	12748	3480	Sisma Y SLV	0	29.7	0	0	2.6E2	0.668
12749	3480	Sisma X SLD	29.2	0	0	0	2.6E2	0.668	12750	3480	Sisma Y SLD	0	29.2	0	0	2.6E2	0.668
12751	3481	Sisma X SLV	32.2	0	0	0	2.8E2	0.668	12752	3481	Sisma Y SLV	0	32.2	0	0	2.8E2	0.668
12753	3481	Sisma X SLD	31.7	0	0	0	2.8E2	0.668	12754	3481	Sisma Y SLD	0	31.7	0	0	2.8E2	0.668
12755	3482	Sisma X SLV	31	0	0	0	2.7E2	0.668	12756	3482	Sisma Y SLV	0	31	0	0	2.7E2	0.668
12757	3482	Sisma X SLD	30.5	0	0	0	2.7E2	0.668	12758	3482	Sisma Y SLD	0	30.5	0	0	2.7E2	0.668
12759	3483	Sisma X SLV	37.3	0	0	0	3.3E2	0.668	12760	3483	Sisma Y SLV	0	37.3	0	0	3.3E2	0.668
12761	3483	Sisma X SLD	36.7	0	0	0	3.3E2	0.668	12762	3483	Sisma Y SLD	0	36.7	0	0	3.3E2	0.668
12763	3484	Sisma X SLV	34.2	0	0	0	3.0E2	0.668	12764	3484	Sisma Y SLV	0	34.2	0	0	3.0E2	0.668
12765	3484	Sisma X SLD	33.7	0	0	0	3.0E2	0.668	12766	3484	Sisma Y SLD	0	33.7	0	0	3.0E2	0.668
12767	3485	Sisma X SLV	29.6	0	0	0	259.32	0.668	12768	3485	Sisma Y SLV	0	29.6	0	0	259.32	0.668
12769	3485	Sisma X SLD	29.1	0	0	0	259.32	0.668	12770	3485	Sisma Y SLD	0	29.1	0	0	259.32	0.668
12771	3486	Sisma X SLV	36.8	0	0	0	3.2E2	0.668	12772	3486	Sisma Y SLV	0	36.8	0	0	3.2E2	0.668
12773	3486	Sisma X SLD	36.2	0	0	0	3.2E2	0.668	12774	3486	Sisma Y SLD	0	36.2	0	0	3.2E2	0.668
12775	3487	Sisma X SLV	31.3	0	0	0	2.7E2	0.668	12776	3487	Sisma Y SLV	0	31.3	0	0	2.7E2	0.668
12777	3487	Sisma X SLD	30.8	0	0	0	2.7E2	0.668	12778	3487	Sisma Y SLD	0	30.8	0	0	2.7E2	0.668
12779	3488	Sisma X SLV	33.8	0	0	0	3.0E2	0.668	12780	3488	Sisma Y SLV	0	33.8	0	0	3.0E2	0.668
12781	3488	Sisma X SLD	33.2	0	0	0	3.0E2	0.668	12782	3488	Sisma Y SLD	0	33.2	0	0	3.0E2	0.668
12783	3489	Sisma X SLV	16.8	0	0	0	1.5E2	0.668	12784	3489	Sisma Y SLV	0	16.8	0	0	1.5E2	0.668
12785	3489	Sisma X SLD	16.5	0	0	0	1.5E2	0.668	12786	3489	Sisma Y SLD	0	16.5	0	0	1.5E2	0.668
12787	3490	Sisma X SLV	29.6	0	0	0	2.6E2	0.668	12788	3490	Sisma Y SLV	0	29.6	0	0	2.6E2	0.668
12789	3490	Sisma X SLD	29.2	0	0	0	2.6E2	0.668	12790	3490	Sisma Y SLD	0	29.2	0	0	2.6E2	0.668
12791	3491	Sisma X SLV	36.8	0	0	0	3.2E2	0.668	12792	3491	Sisma Y SLV	0	36.8	0	0	3.2E2	0.668
12793	3491	Sisma X SLD	36.2	0	0	0	3.2E2	0.668	12794	3491	Sisma Y SLD	0	36.2	0	0	3.2E2	0.668
12795	3492	Sisma X SLV	29.4	0	0	0	2.6E2	0.669	12796	3492	Sisma Y SLV	0	29.4	0	0	2.6E2	0.669
12797	3492	Sisma X SLD	29	0	0	0	2.6E2	0.669	12798	3492	Sisma Y SLD	0	29	0	0	2.6E2	0.669
12799	3493	Sisma X SLV	33.8	0	0	0	3.0E2	0.669	12800	3493	Sisma Y SLV	0	33.8	0	0	3.0E2	0.669
12801	3493	Sisma X SLD	33.2	0	0	0	3.0E2	0.669	12802	3493	Sisma Y SLD	0	33.2	0	0	3.0E2	0.669
12803	3494	Sisma X SLV	15.1	0	0	0	1.3E2	0.669	12804	3494	Sisma Y SLV	0	15.1	0	0	1.3E2	0.669
12805	3494	Sisma X SLD	14.8	0	0	0	1.3E2	0.669	12806	3494	Sisma Y SLD	0	14.8	0	0	1.3E2	0.669
12807	3495	Sisma X SLV	29.4	0	0	0	2.6E2	0.669	12808	3495	Sisma Y SLV	0	29.4	0	0	2.6E2	0.669
12809	3495	Sisma X SLD	28.9	0	0	0	2.6E2	0.669	12810	3495	Sisma Y SLD	0	28.9	0	0	2.6E2	0.669
12811	3496	Sisma X SLV	13.8	0	0	0	1.2E2	0.669	12812	3496	Sisma Y SLV	0	13.8	0	0	1.2E2	0.669
12813	3496	Sisma X SLD	13.6	0	0	0	1.2E2	0.669	12814	3496	Sisma Y SLD	0	13.6	0	0	1.2E2	0.669

Indice	Nodo	Condizione	Fx	Fy	Fz	Mz	Peso	Gamma	Indice	Nodo	Condizione	Fx	Fy	Fz	Mz	Peso	Gamma
12815	3497	Sisma X SLV	16.1	0	0	0	1.4E2	0.669	12816	3497	Sisma Y SLV	0	16.1	0	0	1.4E2	0.669
12817	3497	Sisma X SLD	15.8	0	0	0	1.4E2	0.669	12818	3497	Sisma Y SLD	0	15.8	0	0	1.4E2	0.669
12819	3498	Sisma X SLV	29.6	0	0	0	2.6E2	0.669	12820	3498	Sisma Y SLV	0	29.6	0	0	2.6E2	0.669
12821	3498	Sisma X SLD	29.1	0	0	0	2.6E2	0.669	12822	3498	Sisma Y SLD	0	29.1	0	0	2.6E2	0.669
12823	3499	Sisma X SLV	14.3	0	0	0	1.3E2	0.669	12824	3499	Sisma Y SLV	0	14.3	0	0	1.3E2	0.669
12825	3499	Sisma X SLD	14.1	0	0	0	1.3E2	0.669	12826	3499	Sisma Y SLD	0	14.1	0	0	1.3E2	0.669
12827	3500	Sisma X SLV	16.3	0	0	0	1.4E2	0.669	12828	3500	Sisma Y SLV	0	16.3	0	0	1.4E2	0.669
12829	3500	Sisma X SLD	16.1	0	0	0	1.4E2	0.669	12830	3500	Sisma Y SLD	0	16.1	0	0	1.4E2	0.669
12831	3501	Sisma X SLV	29.4	0	0	0	2.6E2	0.669	12832	3501	Sisma Y SLV	0	29.4	0	0	2.6E2	0.669
12833	3501	Sisma X SLD	28.9	0	0	0	2.6E2	0.669	12834	3501	Sisma Y SLD	0	28.9	0	0	2.6E2	0.669
12835	3502	Sisma X SLV	16.1	0	0	0	1.4E2	0.669	12836	3502	Sisma Y SLV	0	16.1	0	0	1.4E2	0.669
12837	3502	Sisma X SLD	15.8	0	0	0	1.4E2	0.669	12838	3502	Sisma Y SLD	0	15.8	0	0	1.4E2	0.669
12839	3503	Sisma X SLV	29.3	0	0	0	2.6E2	0.669	12840	3503	Sisma Y SLV	0	29.3	0	0	2.6E2	0.669
12841	3503	Sisma X SLD	28.8	0	0	0	2.6E2	0.669	12842	3503	Sisma Y SLD	0	28.8	0	0	2.6E2	0.669
12843	3504	Sisma X SLV	22.7	0	0	0	2.0E2	0.677	12844	3504	Sisma Y SLV	0	22.7	0	0	2.0E2	0.677
12845	3504	Sisma X SLD	22.4	0	0	0	2.0E2	0.677	12846	3504	Sisma Y SLD	0	22.4	0	0	2.0E2	0.677
12847	3505	Sisma X SLV	6.8	0	0	0	58.127	0.684	12848	3505	Sisma Y SLV	0	6.8	0	0	58.127	0.684
12849	3505	Sisma X SLD	6.7	0	0	0	58.127	0.684	12850	3505	Sisma Y SLD	0	6.7	0	0	58.127	0.684
12851	3506	Sisma X SLV	13.7	0	0	0	1.2E2	0.685	12852	3506	Sisma Y SLV	0	13.7	0	0	1.2E2	0.685
12853	3506	Sisma X SLD	13.5	0	0	0	1.2E2	0.685	12854	3506	Sisma Y SLD	0	13.5	0	0	1.2E2	0.685
12855	3507	Sisma X SLV	13.7	0	0	0	1.2E2	0.685	12856	3507	Sisma Y SLV	0	13.7	0	0	1.2E2	0.685
12857	3507	Sisma X SLD	13.4	0	0	0	1.2E2	0.685	12858	3507	Sisma Y SLD	0	13.4	0	0	1.2E2	0.685
12859	3508	Sisma X SLV	6.8	0	0	0	57.771	0.685	12860	3508	Sisma Y SLV	0	6.8	0	0	57.771	0.685
12861	3508	Sisma X SLD	6.6	0	0	0	57.771	0.685	12862	3508	Sisma Y SLD	0	6.6	0	0	57.771	0.685
12863	3509	Sisma X SLV	24.9	0	0	0	2.1E2	0.686	12864	3509	Sisma Y SLV	0	24.9	0	0	2.1E2	0.686
12865	3509	Sisma X SLD	24.5	0	0	0	2.1E2	0.686	12866	3509	Sisma Y SLD	0	24.5	0	0	2.1E2	0.686
12867	3510	Sisma X SLV	19.4	0	0	0	1.6E2	0.69	12868	3510	Sisma Y SLV	0	19.4	0	0	1.6E2	0.69
12869	3510	Sisma X SLD	19.1	0	0	0	1.6E2	0.69	12870	3510	Sisma Y SLD	0	19.1	0	0	1.6E2	0.69
12871	3511	Sisma X SLV	9.7	0	0	0	82.222	0.691	12872	3511	Sisma Y SLV	0	9.7	0	0	82.222	0.691
12873	3511	Sisma X SLD	9.5	0	0	0	82.222	0.691	12874	3511	Sisma Y SLD	0	9.5	0	0	82.222	0.691
12875	3512	Sisma X SLV	9.9	0	0	0	84.24	0.691	12876	3512	Sisma Y SLV	0	9.9	0	0	84.24	0.691
12877	3512	Sisma X SLD	9.8	0	0	0	84.24	0.691	12878	3512	Sisma Y SLD	0	9.8	0	0	84.24	0.691
12879	3513	Sisma X SLV	24.9	0	0	0	2.1E2	0.692	12880	3513	Sisma Y SLV	0	24.9	0	0	2.1E2	0.692
12881	3513	Sisma X SLD	24.5	0	0	0	2.1E2	0.692	12882	3513	Sisma Y SLD	0	24.5	0	0	2.1E2	0.692
12883	3514	Sisma X SLV	23.6	0	0	0	2.0E2	0.693	12884	3514	Sisma Y SLV	0	23.6	0	0	2.0E2	0.693
12885	3514	Sisma X SLD	23.3	0	0	0	2.0E2	0.693	12886	3514	Sisma Y SLD	0	23.3	0	0	2.0E2	0.693
12887	3515	Sisma X SLV	18.2	0	0	0	153.71	0.694	12888	3515	Sisma Y SLV	0	18.2	0	0	153.71	0.694
12889	3515	Sisma X SLD	17.9	0	0	0	153.71	0.694	12890	3515	Sisma Y SLD	0	17.9	0	0	153.71	0.694
12891	3516	Sisma X SLV	13.7	0	0	0	1.2E2	0.694	12892	3516	Sisma Y SLV	0	13.7	0	0	1.2E2	0.694
12893	3516	Sisma X SLD	13.5	0	0	0	1.2E2	0.694	12894	3516	Sisma Y SLD	0	13.5	0	0	1.2E2	0.694
12895	3517	Sisma X SLV	14.3	0	0	0	1.2E2	0.695	12896	3517	Sisma Y SLV	0	14.3	0	0	1.2E2	0.695
12897	3517	Sisma X SLD	14.1	0	0	0	1.2E2	0.695	12898	3517	Sisma Y SLD	0	14.1	0	0	1.2E2	0.695
12899	3518	Sisma X SLV	13.3	0	0	0	1.1E2	0.695	12900	3518	Sisma Y SLV	0	13.3	0	0	1.1E2	0.695
12901	3518	Sisma X SLD	13.1	0	0	0	1.1E2	0.695	12902	3518	Sisma Y SLD	0	13.1	0	0	1.1E2	0.695
12903	3519	Sisma X SLV	11.9	0	0	0	1.0E2	0.695	12904	3519	Sisma Y SLV	0	11.9	0	0	1.0E2	0.695
12905	3519	Sisma X SLD	11.8	0	0	0	1.0E2	0.695	12906	3519	Sisma Y SLD	0	11.8	0	0	1.0E2	0.695
12907	3520	Sisma X SLV	12	0	0	0	1.0E2	0.696	12908	3520	Sisma Y SLV	0	12	0	0	1.0E2	0.696
12909	3520	Sisma X SLD	11.8	0	0	0	1.0E2	0.696	12910	3520	Sisma Y SLD	0	11.8	0	0	1.0E2	0.696
12911	3521	Sisma X SLV	13.1	0	0	0	1.1E2	0.696	12912	3521	Sisma Y SLV	0	13.1	0	0	1.1E2	0.696
12913	3521	Sisma X SLD	12.9	0	0	0	1.1E2	0.696	12914	3521	Sisma Y SLD	0	12.9	0	0	1.1E2	0.696
12915	3522	Sisma X SLV	12.9	0	0	0	1.1E2	0.697	12916	3522	Sisma Y SLV	0	12.9	0	0	1.1E2	0.697
12917	3522	Sisma X SLD	12.7	0	0	0	1.1E2	0.697	12918	3522	Sisma Y SLD	0	12.7	0	0	1.1E2	0.697
12919	3523	Sisma X SLV	12.9	0	0	0	1.1E2	0.697	12920	3523	Sisma Y SLV	0	12.9	0	0	1.1E2	0.697
12921	3523	Sisma X SLD	12.7	0	0	0	1.1E2	0.697	12922	3523	Sisma Y SLD	0	12.7	0	0	1.1E2	0.697
12923	3524	Sisma X SLV	12	0	0	0	1.0E2	0.7	12924	3524	Sisma Y SLV	0	12	0	0	1.0E2	0.7
12925	3524	Sisma X SLD	11.8	0	0	0	1.0E2	0.7	12926	3524	Sisma Y SLD	0	11.8	0	0	1.0E2	0.7
12927	3525	Sisma X SLV	19.2	0	0	0	1.6E2	0.7	12928	3525	Sisma Y SLV	0	19.2	0	0	1.6E2	0.7
12929	3525	Sisma X SLD	18.9	0	0	0	1.6E2	0.7	12930	3525	Sisma Y SLD	0	18.9	0	0	1.6E2	0.7
12931	3526	Sisma X SLV	13.4	0	0	0	1.1E2	0.701	12932	3526	Sisma Y SLV	0	13.4	0	0	1.1E2	0.701
12933	3526	Sisma X SLD	13.2	0	0	0	1.1E2	0.701	12934	3526	Sisma Y SLD	0	13.2	0	0	1.1E2	0.701
12935	3527	Sisma X SLV	17.2	0	0	0	1.4E2	0.703	12936	3527	Sisma Y SLV	0	17.2	0	0	1.4E2	0.703
12937	3527	Sisma X SLD	16.9	0	0	0	1.4E2	0.703	12938	3527	Sisma Y SLD	0	16.9	0	0	1.4E2	0.703
12939	3528	Sisma X SLV	37.2	0	0	0	3.0E2	0.718	12940	3528	Sisma Y SLV	0	37.2	0	0	3.0E2	0.718
12941	3528	Sisma X SLD	36.6	0	0	0	3.0E2	0.718	12942	3528	Sisma Y SLD	0	36.6	0	0	3.0E2	0.718
12943	3529	Sisma X SLV	17.3	0	0	0	1.4E2	0.72	12944	3529	Sisma Y SLV	0	17.3	0	0	1.4E2	0.72
12945	3529	Sisma X SLD	17	0	0	0	1.4E2	0.72	12946	3529	Sisma Y SLD	0	17	0	0	1.4E2	0.72
12947	3530	Sisma X SLV	17.2	0	0	0	140.31	0.72	12948	3530	Sisma Y SLV	0	17.2	0	0	140.31	0.72
12949	3530	Sisma X SLD	17	0	0	0	140.31	0.72	12950	3530	Sisma Y SLD	0	17	0	0	140.31	0.72
12951	3531	Sisma X SLV	36.6	0	0	0	297.47	0.72	12952	3531	Sisma Y SLV	0	36.6	0	0	297.47	0.72
12953	3531	Sisma X SLD	36	0	0	0	297.47	0.72	12954	3531	Sisma Y SLD	0	36	0	0	297.47	0.72
12955	3532	Sisma X SLV	47	0	0	0	3.8E2	0.724	12956	3532	Sisma Y SLV	0	47	0	0	3.8E2	0.724
12957	3532	Sisma X SLD	46.3	0	0	0	3.8E2	0.724	12958	3532	Sisma Y SLD	0	46.3	0	0	3.8E2	0.724
12959	3533	Sisma X SLV	49.2	0	0	0	397.99	0.724	12960	3533	Sisma Y SLV	0	49.2	0	0	397.99	0.724
12961	3533	Sisma X SLD	48.4	0	0	0	397.99	0.724	12962	3533	Sisma Y SLD	0	48.4	0	0	397.99	0.724
12963	3534	Sisma X SLV	49.6	0	0	0	4.0E2	0.724	12964	3534	Sisma Y SLV	0	49.6	0	0	4.0E2	0.724
12965	3534	Sisma X SLD	48.8	0	0	0	4.0E2	0.724	12966	3534	Sisma Y SLD	0	48.8	0	0	4.0E2	0.724
12967	3535	Sisma X SLV	38.4	0	0	0	3.1E2	0.724	12968	3535	Sisma Y SLV	0	38.4	0	0	3.1E2	0.724
12969	3535	Sisma X SLD	37.8	0	0	0	3.1E2	0.724	12970	3535	Sisma Y SLD	0	37.8	0	0	3.1E2	0.724
12971	3536	Sisma X SLV	38.3	0	0	0	309.82	0.725	12972	3536	Sisma Y SLV	0	38.3	0	0	309.82	0.725
12973	3536	Sisma X SLD	37.7	0	0	0	309.82	0.725	12974	3536	Sisma Y SLD	0	37.7	0	0	309.82	0.725
12975	3537	Sisma X SLV	38.3	0	0	0	3.1E2	0.725	12976	3537	Sisma Y SLV	0	38.3	0	0	3.1E2	0.725
12977	3537	Sisma X SLD	37.7	0	0	0	3.1E2	0.725	12978	3537	Sisma Y SLD	0	37.7	0	0	3.1E2	0.725
12979	3538	Sisma X SLV	35.9	0	0	0	2.9E2	0.725	12980	3538	Sisma Y SLV	0	35.9	0	0	2.9E2	0.725
12981	3538	Sisma X SLD	35.3	0	0	0	2.9E2	0.725	12982	3538	Sisma Y SLD	0	35.3	0	0	2.9E2	0.725
12983	3539	Sisma X SLV	35.9	0	0	0	290.43	0.725	12984	3539	Sisma Y SLV	0	35.9	0	0	290.43	0.725
12985	3539	Sisma X SLD	35.3	0	0	0	290.43	0.725	12986	3539	Sisma Y SLD	0	35.3	0	0	290.43	0.725
12987	3540	Sisma X SLV	37.9	0	0	0	3.1E2	0.725	12988	3540	Sisma Y SLV	0	37.9	0	0	3.1E2	0.725
12989	3540	Sisma X SLD	37.3	0	0	0	3.1E2	0.725	12990	3540	Sisma Y SLD	0	37.3	0	0	3.1E2	0.725
12991	3541	Sisma X SLV	38.4	0	0	0	3.1E2	0.725	12992	3541	Sisma Y SLV	0	38.4	0	0	3.1E2	0.725
12993	3541	Sisma X SLD	37.8	0	0	0	3.1E2	0.725	12994	3541	Sisma Y SLD	0	37.8	0	0	3.1E2	0.725
12995	3542	Sisma X SLV	38.6	0	0	0	3.1E2	0.725	12996	3542	Sisma Y SLV	0	38.6	0	0	3.1E2	0.725
12997	3542	Sisma X SLD	37.9	0	0	0	3.1E2	0.725	12998	3542	Sisma Y SLD	0	37.9	0	0	3.1E2	0.725
12999	3543	Sisma X SLV	35.8	0	0	0	2.9E2	0.725	13000	3543	Sisma Y SLV	0	35.8	0	0	2.9E2	0.725
13001	3543	Sisma X SLD	35.2	0	0	0	2.9E2	0.725	13002	3543	Sisma Y SLD	0	35.2	0	0	2.9E2	0.725
13003	3544	Sisma X SLV	35.8	0	0	0	2.9E2	0.725	13004	3544	Sisma Y SLV	0	35.8	0	0	2.9E2	0.725
13005	3544	Sisma X SLD	35.2	0	0	0	2.9E2	0.725	13006	3544	Sisma Y SLD	0	35.2	0	0	2.9E2	0.725
13007	3545	Sisma X SLV	37.8	0	0	0	3.1E2	0.725	13008	3545	Sisma Y SLV	0	37.8	0	0	3.1E2	0.725
13009	3545	Sisma X SLD	37.2	0	0	0	3.1E2	0.725	13010	3545	Sisma Y SLD	0	37.2	0	0	3.1E2	0.725
13011	3546	Sisma X SLV	38.7	0	0	0	3.1E2	0.725	13012	3546	Sisma Y SLV	0	38.7	0	0	3.1E2	0.725
13013	3546	Sisma X SLD	38	0	0	0	3.1E2	0.725	13014	3546	Sisma Y SLD	0	38	0	0	3.1E2	0.725
13015	3547	Sisma X SLV	38.7	0	0	0	3.1E2	0.725	13016	3547	Sisma Y SLV	0	38.7	0	0	3.1E2	0.725
13017	3547	Sisma X SLD	38.1	0	0	0	3.1E2	0.725	13018	3547	Sisma Y SLD	0	38.1	0	0	3.1E2	0.725
13019	3548	Sisma X SLV	35.8	0	0	0	2.9E2	0.725	13020	3548	Sisma Y SLV	0	35.8	0	0	2.9E2	0.725
13021	3548	Sisma X SLD	35.2	0	0	0	2.9E2	0.725	13022	3548	Sisma Y SLD	0	35.2	0	0	2.9E2	0.725

muratura

Indice	Nodo	Condizione	Fx	Fy	Fz	Mz	Peso	Gamma	Indice	Nodo	Condizione	Fx	Fy	Fz	Mz	Peso	Gamma
13023	3549	Sisma X SLV	35.7	0	0	0	2.9E2	0.725	13024	3549	Sisma Y SLV	0	35.7	0	0	2.9E2	0.725
13025	3549	Sisma X SLD	35.1	0	0	0	2.9E2	0.725	13026	3549	Sisma Y SLD	0	35.1	0	0	2.9E2	0.725
13027	3550	Sisma X SLV	37.7	0	0	0	3.0E2	0.725	13028	3550	Sisma Y SLV	0	37.7	0	0	3.0E2	0.725
13029	3550	Sisma X SLD	37.1	0	0	0	3.0E2	0.725	13030	3550	Sisma Y SLD	0	37.1	0	0	3.0E2	0.725
13031	3551	Sisma X SLV	35.7	0	0	0	2.9E2	0.725	13032	3551	Sisma Y SLV	0	35.7	0	0	2.9E2	0.725
13033	3551	Sisma X SLD	35.2	0	0	0	2.9E2	0.725	13034	3551	Sisma Y SLD	0	35.2	0	0	2.9E2	0.725
13035	3552	Sisma X SLV	35.6	0	0	0	2.9E2	0.725	13036	3552	Sisma Y SLV	0	35.6	0	0	2.9E2	0.725
13037	3552	Sisma X SLD	35	0	0	0	2.9E2	0.725	13038	3552	Sisma Y SLD	0	35	0	0	2.9E2	0.725
13039	3553	Sisma X SLV	38.6	0	0	0	3.1E2	0.725	13040	3553	Sisma Y SLV	0	38.6	0	0	3.1E2	0.725
13041	3553	Sisma X SLD	38	0	0	0	3.1E2	0.725	13042	3553	Sisma Y SLD	0	38	0	0	3.1E2	0.725
13043	3554	Sisma X SLV	37.6	0	0	0	304.09	0.725	13044	3554	Sisma Y SLV	0	37.6	0	0	304.09	0.725
13045	3554	Sisma X SLD	37	0	0	0	304.09	0.725	13046	3554	Sisma Y SLD	0	37	0	0	304.09	0.725
13047	3555	Sisma X SLV	35.7	0	0	0	2.9E2	0.725	13048	3555	Sisma Y SLV	0	35.7	0	0	2.9E2	0.725
13049	3555	Sisma X SLD	35.2	0	0	0	2.9E2	0.725	13050	3555	Sisma Y SLD	0	35.2	0	0	2.9E2	0.725
13051	3556	Sisma X SLV	37.6	0	0	0	3.0E2	0.726	13052	3556	Sisma Y SLV	0	37.6	0	0	3.0E2	0.726
13053	3556	Sisma X SLD	37	0	0	0	3.0E2	0.726	13054	3556	Sisma Y SLD	0	37	0	0	3.0E2	0.726
13055	3557	Sisma X SLV	35.5	0	0	0	2.9E2	0.726	13056	3557	Sisma Y SLV	0	35.5	0	0	2.9E2	0.726
13057	3557	Sisma X SLD	34.9	0	0	0	2.9E2	0.726	13058	3557	Sisma Y SLD	0	34.9	0	0	2.9E2	0.726
13059	3558	Sisma X SLV	35.7	0	0	0	2.9E2	0.726	13060	3558	Sisma Y SLV	0	35.7	0	0	2.9E2	0.726
13061	3558	Sisma X SLD	35.1	0	0	0	2.9E2	0.726	13062	3558	Sisma Y SLD	0	35.1	0	0	2.9E2	0.726
13063	3559	Sisma X SLV	37.5	0	0	0	3.0E2	0.726	13064	3559	Sisma Y SLV	0	37.5	0	0	3.0E2	0.726
13065	3559	Sisma X SLD	36.9	0	0	0	3.0E2	0.726	13066	3559	Sisma Y SLD	0	36.9	0	0	3.0E2	0.726
13067	3560	Sisma X SLV	35.5	0	0	0	2.9E2	0.726	13068	3560	Sisma Y SLV	0	35.5	0	0	2.9E2	0.726
13069	3560	Sisma X SLD	35	0	0	0	2.9E2	0.726	13070	3560	Sisma Y SLD	0	35	0	0	2.9E2	0.726
13071	3561	Sisma X SLV	35.4	0	0	0	2.9E2	0.726	13072	3561	Sisma Y SLV	0	35.4	0	0	2.9E2	0.726
13073	3561	Sisma X SLD	34.8	0	0	0	2.9E2	0.726	13074	3561	Sisma Y SLD	0	34.8	0	0	2.9E2	0.726
13075	3562	Sisma X SLV	38.2	0	0	0	3.1E2	0.726	13076	3562	Sisma Y SLV	0	38.2	0	0	3.1E2	0.726
13077	3562	Sisma X SLD	37.6	0	0	0	3.1E2	0.726	13078	3562	Sisma Y SLD	0	37.6	0	0	3.1E2	0.726
13079	3563	Sisma X SLV	36.3	0	0	0	2.9E2	0.726	13080	3563	Sisma Y SLV	0	36.3	0	0	2.9E2	0.726
13081	3563	Sisma X SLD	35.8	0	0	0	2.9E2	0.726	13082	3563	Sisma Y SLD	0	35.8	0	0	2.9E2	0.726
13083	3564	Sisma X SLV	37.4	0	0	0	3.0E2	0.726	13084	3564	Sisma Y SLV	0	37.4	0	0	3.0E2	0.726
13085	3564	Sisma X SLD	36.8	0	0	0	3.0E2	0.726	13086	3564	Sisma Y SLD	0	36.8	0	0	3.0E2	0.726
13087	3565	Sisma X SLV	35.3	0	0	0	2.9E2	0.726	13088	3565	Sisma Y SLV	0	35.3	0	0	2.9E2	0.726
13089	3565	Sisma X SLD	34.8	0	0	0	2.9E2	0.726	13090	3565	Sisma Y SLD	0	34.8	0	0	2.9E2	0.726
13091	3566	Sisma X SLV	36.3	0	0	0	2.9E2	0.726	13092	3566	Sisma Y SLV	0	36.3	0	0	2.9E2	0.726
13093	3566	Sisma X SLD	35.7	0	0	0	2.9E2	0.726	13094	3566	Sisma Y SLD	0	35.7	0	0	2.9E2	0.726
13095	3567	Sisma X SLV	35.3	0	0	0	2.8E2	0.726	13096	3567	Sisma Y SLV	0	35.3	0	0	2.8E2	0.726
13097	3567	Sisma X SLD	34.7	0	0	0	2.8E2	0.726	13098	3567	Sisma Y SLD	0	34.7	0	0	2.8E2	0.726
13099	3568	Sisma X SLV	36.2	0	0	0	2.9E2	0.726	13100	3568	Sisma Y SLV	0	36.2	0	0	2.9E2	0.726
13101	3568	Sisma X SLD	35.7	0	0	0	2.9E2	0.726	13102	3568	Sisma Y SLD	0	35.7	0	0	2.9E2	0.726
13103	3569	Sisma X SLV	37.3	0	0	0	3.0E2	0.726	13104	3569	Sisma Y SLV	0	37.3	0	0	3.0E2	0.726
13105	3569	Sisma X SLD	36.7	0	0	0	3.0E2	0.726	13106	3569	Sisma Y SLD	0	36.7	0	0	3.0E2	0.726
13107	3570	Sisma X SLV	35.2	0	0	0	283.89	0.726	13108	3570	Sisma Y SLV	0	35.2	0	0	283.89	0.726
13109	3570	Sisma X SLD	34.6	0	0	0	283.89	0.726	13110	3570	Sisma Y SLD	0	34.6	0	0	283.89	0.726
13111	3571	Sisma X SLV	35.1	0	0	0	2.8E2	0.726	13112	3571	Sisma Y SLV	0	35.1	0	0	2.8E2	0.726
13113	3571	Sisma X SLD	34.5	0	0	0	2.8E2	0.726	13114	3571	Sisma Y SLD	0	34.5	0	0	2.8E2	0.726
13115	3572	Sisma X SLV	34.4	0	0	0	2.8E2	0.726	13116	3572	Sisma Y SLV	0	34.4	0	0	2.8E2	0.726
13117	3572	Sisma X SLD	33.9	0	0	0	2.8E2	0.726	13118	3572	Sisma Y SLD	0	33.9	0	0	2.8E2	0.726
13119	3573	Sisma X SLV	34.7	0	0	0	2.8E2	0.726	13120	3573	Sisma Y SLV	0	34.7	0	0	2.8E2	0.726
13121	3573	Sisma X SLD	34.2	0	0	0	2.8E2	0.726	13122	3573	Sisma Y SLD	0	34.2	0	0	2.8E2	0.726
13123	3574	Sisma X SLV	35	0	0	0	2.8E2	0.726	13124	3574	Sisma Y SLV	0	35	0	0	2.8E2	0.726
13125	3574	Sisma X SLD	34.5	0	0	0	2.8E2	0.726	13126	3574	Sisma Y SLD	0	34.5	0	0	2.8E2	0.726
13127	3575	Sisma X SLV	37.7	0	0	0	304.36	0.726	13128	3575	Sisma Y SLV	0	37.7	0	0	304.36	0.726
13129	3575	Sisma X SLD	37.1	0	0	0	304.36	0.726	13130	3575	Sisma Y SLD	0	37.1	0	0	304.36	0.726
13131	3576	Sisma X SLV	37.1	0	0	0	3.0E2	0.726	13132	3576	Sisma Y SLV	0	37.1	0	0	3.0E2	0.726
13133	3576	Sisma X SLD	36.5	0	0	0	3.0E2	0.726	13134	3576	Sisma Y SLD	0	36.5	0	0	3.0E2	0.726
13135	3577	Sisma X SLV	35.1	0	0	0	2.8E2	0.726	13136	3577	Sisma Y SLV	0	35.1	0	0	2.8E2	0.726
13137	3577	Sisma X SLD	34.5	0	0	0	2.8E2	0.726	13138	3577	Sisma Y SLD	0	34.5	0	0	2.8E2	0.726
13139	3578	Sisma X SLV	36.1	0	0	0	291.03	0.726	13140	3578	Sisma Y SLV	0	36.1	0	0	291.03	0.726
13141	3578	Sisma X SLD	35.5	0	0	0	291.03	0.726	13142	3578	Sisma Y SLD	0	35.5	0	0	291.03	0.726
13143	3579	Sisma X SLV	36	0	0	0	2.9E2	0.727	13144	3579	Sisma Y SLV	0	36	0	0	2.9E2	0.727
13145	3579	Sisma X SLD	35.4	0	0	0	2.9E2	0.727	13146	3579	Sisma Y SLD	0	35.4	0	0	2.9E2	0.727
13147	3580	Sisma X SLV	34.9	0	0	0	2.8E2	0.727	13148	3580	Sisma Y SLV	0	34.9	0	0	2.8E2	0.727
13149	3580	Sisma X SLD	34.3	0	0	0	2.8E2	0.727	13150	3580	Sisma Y SLD	0	34.3	0	0	2.8E2	0.727
13151	3581	Sisma X SLV	18.6	0	0	0	1.5E2	0.727	13152	3581	Sisma Y SLV	0	18.6	0	0	1.5E2	0.727
13153	3581	Sisma X SLD	18.3	0	0	0	1.5E2	0.727	13154	3581	Sisma Y SLD	0	18.3	0	0	1.5E2	0.727
13155	3582	Sisma X SLV	18.6	0	0	0	1.5E2	0.727	13156	3582	Sisma Y SLV	0	18.6	0	0	1.5E2	0.727
13157	3582	Sisma X SLD	18.3	0	0	0	1.5E2	0.727	13158	3582	Sisma Y SLD	0	18.3	0	0	1.5E2	0.727
13159	3583	Sisma X SLV	35	0	0	0	2.8E2	0.727	13160	3583	Sisma Y SLV	0	35	0	0	2.8E2	0.727
13161	3583	Sisma X SLD	34.4	0	0	0	2.8E2	0.727	13162	3583	Sisma Y SLD	0	34.4	0	0	2.8E2	0.727
13163	3584	Sisma X SLV	36.9	0	0	0	3.0E2	0.727	13164	3584	Sisma Y SLV	0	36.9	0	0	3.0E2	0.727
13165	3584	Sisma X SLD	36.3	0	0	0	3.0E2	0.727	13166	3584	Sisma Y SLD	0	36.3	0	0	3.0E2	0.727
13167	3585	Sisma X SLV	35.2	0	0	0	2.8E2	0.727	13168	3585	Sisma Y SLV	0	35.2	0	0	2.8E2	0.727
13169	3585	Sisma X SLD	34.7	0	0	0	2.8E2	0.727	13170	3585	Sisma Y SLD	0	34.7	0	0	2.8E2	0.727
13171	3586	Sisma X SLV	37	0	0	0	3.0E2	0.727	13172	3586	Sisma Y SLV	0	37	0	0	3.0E2	0.727
13173	3586	Sisma X SLD	36.4	0	0	0	3.0E2	0.727	13174	3586	Sisma Y SLD	0	36.4	0	0	3.0E2	0.727
13175	3587	Sisma X SLV	34.6	0	0	0	2.8E2	0.727	13176	3587	Sisma Y SLV	0	34.6	0	0	2.8E2	0.727
13177	3587	Sisma X SLD	34	0	0	0	2.8E2	0.727	13178	3587	Sisma Y SLD	0	34	0	0	2.8E2	0.727
13179	3588	Sisma X SLV	35.2	0	0	0	2.8E2	0.727	13180	3588	Sisma Y SLV	0	35.2	0	0	2.8E2	0.727
13181	3588	Sisma X SLD	34.7	0	0	0	2.8E2	0.727	13182	3588	Sisma Y SLD	0	34.7	0	0	2.8E2	0.727
13183	3589	Sisma X SLV	37	0	0	0	3.0E2	0.727	13184	3589	Sisma Y SLV	0	37	0	0	3.0E2	0.727
13185	3589	Sisma X SLD	36.4	0	0	0	3.0E2	0.727	13186	3589	Sisma Y SLD	0	36.4	0	0	3.0E2	0.727
13187	3590	Sisma X SLV	34.6	0	0	0	2.8E2	0.727	13188	3590	Sisma Y SLV	0	34.6	0	0	2.8E2	0.727
13189	3590	Sisma X SLD	34	0	0	0	2.8E2	0.727	13190	3590	Sisma Y SLD	0	34	0	0	2.8E2	0.727
13191	3591	Sisma X SLV	34.2	0	0	0	2.8E2	0.727	13192	3591	Sisma Y SLV	0	34.2	0	0	2.8E2	0.727
13193	3591	Sisma X SLD	33.7	0	0	0	2.8E2	0.727	13194	3591	Sisma Y SLD	0	33.7	0	0	2.8E2	0.727
13195	3592	Sisma X SLV	34.9	0	0	0	2.8E2	0.727	13196	3592	Sisma Y SLV	0	34.9	0	0	2.8E2	0.727
13197	3592	Sisma X SLD	34.4	0	0	0	2.8E2	0.727	13198	3592	Sisma Y SLD	0	34.4	0	0	2.8E2	0.727
13199	3593	Sisma X SLV	35.1	0	0	0	283.37	0.727	13200	3593	Sisma Y SLV	0	35.1	0	0	283.37	0.727
13201	3593	Sisma X SLD	34.6	0	0	0	283.37	0.727	13202	3593	Sisma Y SLD	0	34.6	0	0	283.37	0.727
13203	3594	Sisma X SLV	36.9	0	0	0	297.82	0.727	13204	3594	Sisma Y SLV	0	36.9	0	0	297.82	0.727
13205	3594	Sisma X SLD	36.4	0	0	0	297.82	0.727	13206	3594	Sisma Y SLD	0	36.4	0	0	297.82	0.727
13207	3595	Sisma X SLV	34.5	0	0	0	2.8E2	0.727	13208	3595	Sisma Y SLV	0	34.5	0	0	2.8E2	0.727
13209	3595	Sisma X SLD	33.9	0	0	0	2.8E2	0.727	13210	3595	Sisma Y SLD	0	33.9	0	0	2.8E2	0.727
13211	3596	Sisma X SLV	35.2	0	0	0	2.8E2	0.727	13212	3596	Sisma Y SLV	0	35.2	0	0	2.8E2	0.727
13213	3596	Sisma X SLD	34.6	0	0	0	2.8E2	0.727	13214	3596	Sisma Y SLD	0	34.6	0	0	2.8E2	0.727
13215	3597	Sisma X SLV	37	0	0	0	3.0E2	0.727	13216	3597	Sisma Y SLV	0	37	0	0	3.0E2	0.727
13217	3597	Sisma X SLD	36.4	0	0	0	3.0E2	0.727	13218	3597	Sisma Y SLD	0	36.4	0	0	3.0E2	0.727
13219	3598	Sisma X SLV	34.5	0	0	0	278.46	0.727	13220	3598	Sisma Y SLV	0	34.5	0	0	278.46	0.727
13221	3598	Sisma X SLD	34	0	0	0	278.46	0.727	13222	3598	Sisma Y SLD	0	34	0	0	278.46	0.727
13223	3599	Sisma X SLV	34.8	0	0	0	2.8E2	0.727	13224	3599	Sisma Y SLV	0	34.8	0	0	2.8E2	0.727

Indice	Nodo	Condizione	Fx	Fy	Fz	Mz	Peso	Gamma	Indice	Nodo	Condizione	Fx	Fy	Fz	Mz	Peso	Gamma
13225	3599	Sisma X SLD	34.2	0	0	0	2.8E2	0.727	13226	3599	Sisma Y SLD	0	34.2	0	0	2.8E2	0.727
13227	3600	Sisma X SLV	34.9	0	0	0	2.8E2	0.727	13228	3600	Sisma Y SLV	0	34.9	0	0	2.8E2	0.727
13229	3600	Sisma X SLD	34.3	0	0	0	2.8E2	0.727	13230	3600	Sisma Y SLD	0	34.3	0	0	2.8E2	0.727
13231	3601	Sisma X SLV	34.6	0	0	0	2.8E2	0.727	13232	3601	Sisma Y SLV	0	34.6	0	0	2.8E2	0.727
13233	3601	Sisma X SLD	34.1	0	0	0	2.8E2	0.727	13234	3601	Sisma Y SLD	0	34.1	0	0	2.8E2	0.727
13235	3602	Sisma X SLV	35	0	0	0	2.8E2	0.727	13236	3602	Sisma Y SLV	0	35	0	0	2.8E2	0.727
13237	3602	Sisma X SLD	34.5	0	0	0	2.8E2	0.727	13238	3602	Sisma Y SLD	0	34.5	0	0	2.8E2	0.727
13239	3603	Sisma X SLV	36.9	0	0	0	3.0E2	0.727	13240	3603	Sisma Y SLV	0	36.9	0	0	3.0E2	0.727
13241	3603	Sisma X SLD	36.3	0	0	0	3.0E2	0.727	13242	3603	Sisma Y SLD	0	36.3	0	0	3.0E2	0.727
13243	3604	Sisma X SLV	34.4	0	0	0	2.8E2	0.727	13244	3604	Sisma Y SLV	0	34.4	0	0	2.8E2	0.727
13245	3604	Sisma X SLD	33.8	0	0	0	2.8E2	0.727	13246	3604	Sisma Y SLD	0	33.8	0	0	2.8E2	0.727
13247	3605	Sisma X SLV	34.2	0	0	0	2.8E2	0.727	13248	3605	Sisma Y SLV	0	34.2	0	0	2.8E2	0.727
13249	3605	Sisma X SLD	33.7	0	0	0	2.8E2	0.727	13250	3605	Sisma Y SLD	0	33.7	0	0	2.8E2	0.727
13251	3606	Sisma X SLV	35	0	0	0	282.42	0.727	13252	3606	Sisma Y SLV	0	35	0	0	282.42	0.727
13253	3606	Sisma X SLD	34.5	0	0	0	282.42	0.727	13254	3606	Sisma Y SLD	0	34.5	0	0	282.42	0.727
13255	3607	Sisma X SLV	36.9	0	0	0	3.0E2	0.727	13256	3607	Sisma Y SLV	0	36.9	0	0	3.0E2	0.727
13257	3607	Sisma X SLD	36.3	0	0	0	3.0E2	0.727	13258	3607	Sisma Y SLD	0	36.3	0	0	3.0E2	0.727
13259	3608	Sisma X SLV	34.4	0	0	0	2.8E2	0.727	13260	3608	Sisma Y SLV	0	34.4	0	0	2.8E2	0.727
13261	3608	Sisma X SLD	33.9	0	0	0	2.8E2	0.727	13262	3608	Sisma Y SLD	0	33.9	0	0	2.8E2	0.727
13263	3609	Sisma X SLV	34.5	0	0	0	2.8E2	0.727	13264	3609	Sisma Y SLV	0	34.5	0	0	2.8E2	0.727
13265	3609	Sisma X SLD	34	0	0	0	2.8E2	0.727	13266	3609	Sisma Y SLD	0	34	0	0	2.8E2	0.727
13267	3610	Sisma X SLV	35	0	0	0	2.8E2	0.727	13268	3610	Sisma Y SLV	0	35	0	0	2.8E2	0.727
13269	3610	Sisma X SLD	34.4	0	0	0	2.8E2	0.727	13270	3610	Sisma Y SLD	0	34.4	0	0	2.8E2	0.727
13271	3611	Sisma X SLV	36.8	0	0	0	3.0E2	0.727	13272	3611	Sisma Y SLV	0	36.8	0	0	3.0E2	0.727
13273	3611	Sisma X SLD	36.2	0	0	0	3.0E2	0.727	13274	3611	Sisma Y SLD	0	36.2	0	0	3.0E2	0.727
13275	3612	Sisma X SLV	34.3	0	0	0	2.8E2	0.727	13276	3612	Sisma Y SLV	0	34.3	0	0	2.8E2	0.727
13277	3612	Sisma X SLD	33.8	0	0	0	2.8E2	0.727	13278	3612	Sisma Y SLD	0	33.8	0	0	2.8E2	0.727
13279	3613	Sisma X SLV	34.2	0	0	0	2.8E2	0.727	13280	3613	Sisma Y SLV	0	34.2	0	0	2.8E2	0.727
13281	3613	Sisma X SLD	33.6	0	0	0	2.8E2	0.727	13282	3613	Sisma Y SLD	0	33.6	0	0	2.8E2	0.727
13283	3614	Sisma X SLV	34.4	0	0	0	2.8E2	0.727	13284	3614	Sisma Y SLV	0	34.4	0	0	2.8E2	0.727
13285	3614	Sisma X SLD	33.8	0	0	0	2.8E2	0.727	13286	3614	Sisma Y SLD	0	33.8	0	0	2.8E2	0.727
13287	3615	Sisma X SLV	34.9	0	0	0	2.8E2	0.727	13288	3615	Sisma Y SLV	0	34.9	0	0	2.8E2	0.727
13289	3615	Sisma X SLD	34.4	0	0	0	2.8E2	0.727	13290	3615	Sisma Y SLD	0	34.4	0	0	2.8E2	0.727
13291	3616	Sisma X SLV	36.7	0	0	0	3.0E2	0.727	13292	3616	Sisma Y SLV	0	36.7	0	0	3.0E2	0.727
13293	3616	Sisma X SLD	36.2	0	0	0	3.0E2	0.727	13294	3616	Sisma Y SLD	0	36.2	0	0	3.0E2	0.727
13295	3617	Sisma X SLV	34.3	0	0	0	2.8E2	0.727	13296	3617	Sisma Y SLV	0	34.3	0	0	2.8E2	0.727
13297	3617	Sisma X SLD	33.7	0	0	0	2.8E2	0.727	13298	3617	Sisma Y SLD	0	33.7	0	0	2.8E2	0.727
13299	3618	Sisma X SLV	34.3	0	0	0	2.8E2	0.727	13300	3618	Sisma Y SLV	0	34.3	0	0	2.8E2	0.727
13301	3618	Sisma X SLD	33.8	0	0	0	2.8E2	0.727	13302	3618	Sisma Y SLD	0	33.8	0	0	2.8E2	0.727
13303	3619	Sisma X SLV	34.9	0	0	0	281.32	0.727	13304	3619	Sisma Y SLV	0	34.9	0	0	281.32	0.727
13305	3619	Sisma X SLD	34.3	0	0	0	281.32	0.727	13306	3619	Sisma Y SLD	0	34.3	0	0	281.32	0.727
13307	3620	Sisma X SLV	36.7	0	0	0	3.0E2	0.727	13308	3620	Sisma Y SLV	0	36.7	0	0	3.0E2	0.727
13309	3620	Sisma X SLD	36.1	0	0	0	3.0E2	0.727	13310	3620	Sisma Y SLD	0	36.1	0	0	3.0E2	0.727
13311	3621	Sisma X SLV	34.3	0	0	0	2.8E2	0.727	13312	3621	Sisma Y SLV	0	34.3	0	0	2.8E2	0.727
13313	3621	Sisma X SLD	33.7	0	0	0	2.8E2	0.727	13314	3621	Sisma Y SLD	0	33.7	0	0	2.8E2	0.727
13315	3622	Sisma X SLV	34.3	0	0	0	2.8E2	0.727	13316	3622	Sisma Y SLV	0	34.3	0	0	2.8E2	0.727
13317	3622	Sisma X SLD	33.7	0	0	0	2.8E2	0.727	13318	3622	Sisma Y SLD	0	33.7	0	0	2.8E2	0.727
13319	3623	Sisma X SLV	34.9	0	0	0	281.28	0.727	13320	3623	Sisma Y SLV	0	34.9	0	0	281.28	0.727
13321	3623	Sisma X SLD	34.3	0	0	0	281.28	0.727	13322	3623	Sisma Y SLD	0	34.3	0	0	281.28	0.727
13323	3624	Sisma X SLV	36.7	0	0	0	3.0E2	0.727	13324	3624	Sisma Y SLV	0	36.7	0	0	3.0E2	0.727
13325	3624	Sisma X SLD	36.1	0	0	0	3.0E2	0.727	13326	3624	Sisma Y SLD	0	36.1	0	0	3.0E2	0.727
13327	3625	Sisma X SLV	34.3	0	0	0	2.8E2	0.727	13328	3625	Sisma Y SLV	0	34.3	0	0	2.8E2	0.727
13329	3625	Sisma X SLD	33.7	0	0	0	2.8E2	0.727	13330	3625	Sisma Y SLD	0	33.7	0	0	2.8E2	0.727
13331	3626	Sisma X SLV	34.5	0	0	0	2.8E2	0.727	13332	3626	Sisma Y SLV	0	34.5	0	0	2.8E2	0.727
13333	3626	Sisma X SLD	34	0	0	0	2.8E2	0.727	13334	3626	Sisma Y SLD	0	34	0	0	2.8E2	0.727
13335	3627	Sisma X SLV	34.3	0	0	0	2.8E2	0.727	13336	3627	Sisma Y SLV	0	34.3	0	0	2.8E2	0.727
13337	3627	Sisma X SLD	33.7	0	0	0	2.8E2	0.727	13338	3627	Sisma Y SLD	0	33.7	0	0	2.8E2	0.727
13339	3628	Sisma X SLV	55.7	0	0	0	4.5E2	0.727	13340	3628	Sisma Y SLV	0	55.7	0	0	4.5E2	0.727
13341	3628	Sisma X SLD	54.8	0	0	0	4.5E2	0.727	13342	3628	Sisma Y SLD	0	54.8	0	0	4.5E2	0.727
13343	3629	Sisma X SLV	52.9	0	0	0	4.3E2	0.727	13344	3629	Sisma Y SLV	0	52.9	0	0	4.3E2	0.727
13345	3629	Sisma X SLD	52.1	0	0	0	4.3E2	0.727	13346	3629	Sisma Y SLD	0	52.1	0	0	4.3E2	0.727
13347	3630	Sisma X SLV	34.9	0	0	0	2.8E2	0.727	13348	3630	Sisma Y SLV	0	34.9	0	0	2.8E2	0.727
13349	3630	Sisma X SLD	34.3	0	0	0	2.8E2	0.727	13350	3630	Sisma Y SLD	0	34.3	0	0	2.8E2	0.727
13351	3631	Sisma X SLV	34.9	0	0	0	2.8E2	0.727	13352	3631	Sisma Y SLV	0	34.9	0	0	2.8E2	0.727
13353	3631	Sisma X SLD	34.3	0	0	0	2.8E2	0.727	13354	3631	Sisma Y SLD	0	34.3	0	0	2.8E2	0.727
13355	3632	Sisma X SLV	34.9	0	0	0	2.8E2	0.727	13356	3632	Sisma Y SLV	0	34.9	0	0	2.8E2	0.727
13357	3632	Sisma X SLD	34.3	0	0	0	2.8E2	0.727	13358	3632	Sisma Y SLD	0	34.3	0	0	2.8E2	0.727
13359	3633	Sisma X SLV	34.8	0	0	0	2.8E2	0.727	13360	3633	Sisma Y SLV	0	34.8	0	0	2.8E2	0.727
13361	3633	Sisma X SLD	34.3	0	0	0	2.8E2	0.727	13362	3633	Sisma Y SLD	0	34.3	0	0	2.8E2	0.727
13363	3634	Sisma X SLV	35.3	0	0	0	2.8E2	0.727	13364	3634	Sisma Y SLV	0	35.3	0	0	2.8E2	0.727
13365	3634	Sisma X SLD	34.7	0	0	0	2.8E2	0.727	13366	3634	Sisma Y SLD	0	34.7	0	0	2.8E2	0.727
13367	3635	Sisma X SLV	35.3	0	0	0	2.8E2	0.727	13368	3635	Sisma Y SLV	0	35.3	0	0	2.8E2	0.727
13369	3635	Sisma X SLD	34.7	0	0	0	2.8E2	0.727	13370	3635	Sisma Y SLD	0	34.7	0	0	2.8E2	0.727
13371	3636	Sisma X SLV	36	0	0	0	2.9E2	0.727	13372	3636	Sisma Y SLV	0	36	0	0	2.9E2	0.727
13373	3636	Sisma X SLD	35.4	0	0	0	2.9E2	0.727	13374	3636	Sisma Y SLD	0	35.4	0	0	2.9E2	0.727
13375	3637	Sisma X SLV	36	0	0	0	2.9E2	0.727	13376	3637	Sisma Y SLV	0	36	0	0	2.9E2	0.727
13377	3637	Sisma X SLD	35.4	0	0	0	2.9E2	0.727	13378	3637	Sisma Y SLD	0	35.4	0	0	2.9E2	0.727
13379	3638	Sisma X SLV	38.2	0	0	0	3.1E2	0.727	13380	3638	Sisma Y SLV	0	38.2	0	0	3.1E2	0.727
13381	3638	Sisma X SLD	37.5	0	0	0	3.1E2	0.727	13382	3638	Sisma Y SLD	0	37.5	0	0	3.1E2	0.727
13383	3639	Sisma X SLV	38.2	0	0	0	3.1E2	0.727	13384	3639	Sisma Y SLV	0	38.2	0	0	3.1E2	0.727
13385	3639	Sisma X SLD	37.5	0	0	0	3.1E2	0.727	13386	3639	Sisma Y SLD	0	37.5	0	0	3.1E2	0.727
13387	3640	Sisma X SLV	40.9	0	0	0	329.61	0.727	13388	3640	Sisma Y SLV	0	40.9	0	0	329.61	0.727
13389	3640	Sisma X SLD	40.2	0	0	0	329.61	0.727	13390	3640	Sisma Y SLD	0	40.2	0	0	329.61	0.727
13391	3641	Sisma X SLV	40.9	0	0	0	329.61	0.727	13392	3641	Sisma Y SLV	0	40.9	0	0	329.61	0.727
13393	3641	Sisma X SLD	40.2	0	0	0	329.61	0.727	13394	3641	Sisma Y SLD	0	40.2	0	0	329.61	0.727
13395	3642	Sisma X SLV	41.7	0	0	0	3.4E2	0.727	13396	3642	Sisma Y SLV	0	41.7	0	0	3.4E2	0.727
13397	3642	Sisma X SLD	41	0	0	0	3.4E2	0.727	13398	3642	Sisma Y SLD	0	41	0	0	3.4E2	0.727
13399	3643	Sisma X SLV	41.7	0	0	0	3.4E2	0.727	13400	3643	Sisma Y SLV	0	41.7	0	0	3.4E2	0.727
13401	3643	Sisma X SLD	41	0	0	0	3.4E2	0.727	13402	3643	Sisma Y SLD	0	41	0	0	3.4E2	0.727
13403	3644	Sisma X SLV	42.5	0	0	0	3.4E2	0.727	13404	3644	Sisma Y SLV	0	42.5	0	0	3.4E2	0.727
13405	3644	Sisma X SLD	41.8	0	0	0	3.4E2	0.727	13406	3644	Sisma Y SLD	0	41.8	0	0	3.4E2	0.727
13407	3645	Sisma X SLV	42.5	0	0	0	3.4E2	0.727	13408	3645	Sisma Y SLV	0	42.5	0	0	3.4E2	0.727
13409	3645	Sisma X SLD	41.8	0	0	0	3.4E2	0.727	13410	3645	Sisma Y SLD	0	41.8	0	0	3.4E2	0.727
13411	3646	Sisma X SLV	43.2	0	0	0	3.5E2	0.727	13412	3646	Sisma Y SLV	0	43.2	0	0	3.5E2	0.727
13413	3646	Sisma X SLD	42.5	0	0	0	3.5E2	0.727	13414	3646	Sisma Y SLD	0	42.5	0	0	3.5E2	0.727
13415	3647	Sisma X SLV	43.2	0	0	0	3.5E2	0.727	13416	3647	Sisma Y SLV	0	43.2	0	0	3.5E2	0.727
13417	3647	Sisma X SLD	42.5	0	0	0	3.5E2	0.727	13418	3647	Sisma Y SLD	0	42.5	0	0	3.5E2	0.727
13419	3648	Sisma X SLV	43.4	0	0	0	3.5E2	0.727	13420	3648	Sisma Y SLV	0	43.4	0	0	3.5E2	0.727
13421	3648	Sisma X SLD	42.7	0	0	0	3.5E2	0.727	13422	3648	Sisma Y SLD	0	42.7	0	0	3.5E2	0.727
13423	3649	Sisma X SLV	43.4	0	0	0	3.5E2	0.727	13424	3649	Sisma Y SLV	0	43.4	0	0	3.5E2	0.727
13425	3649	Sisma X SLD	42.7	0	0	0	3.5E2	0.727	13426	3649	Sisma Y SLD	0	42.7	0	0	3.5E2	0.727
13427	3650	Sisma X SLV	43.5	0	0	0	3.5E2	0.727	13428	3650	Sisma Y SLV	0	43.5	0	0	3.5E2	0.727
13429	3650	Sisma X SLD	42.8	0	0	0	3.5E2	0.727	13430	3650	Sisma Y SLD	0	42.8	0	0	3.5E2	0.727
13431	3651	Sisma X SLV	43.5	0	0	0	3.5E2	0.727	13432	3651	Sisma Y SLV	0	43.5	0	0	3.5E2	0.727

muratura

Indice	Nodo	Condizione	Fx	Fy	Fz	Mz	Peso	Gamma	Indice	Nodo	Condizione	Fx	Fy	Fz	Mz	Peso	Gamma
13433	3651	Sisma X SLD	42.8	0	0	0	3.5E2	0.727	13434	3651	Sisma Y SLD	0	42.8	0	0	3.5E2	0.727
13435	3652	Sisma X SLV	43.5	0	0	0	3.5E2	0.727	13436	3652	Sisma Y SLV	0	43.5	0	0	3.5E2	0.727
13437	3652	Sisma X SLD	42.8	0	0	0	3.5E2	0.727	13438	3652	Sisma Y SLD	0	42.8	0	0	3.5E2	0.727
13439	3653	Sisma X SLV	43.5	0	0	0	3.5E2	0.727	13440	3653	Sisma Y SLV	0	43.5	0	0	3.5E2	0.727
13441	3653	Sisma X SLD	42.8	0	0	0	3.5E2	0.727	13442	3653	Sisma Y SLD	0	42.8	0	0	3.5E2	0.727
13443	3654	Sisma X SLV	43.5	0	0	0	3.5E2	0.727	13444	3654	Sisma Y SLV	0	43.5	0	0	3.5E2	0.727
13445	3654	Sisma X SLD	42.8	0	0	0	3.5E2	0.727	13446	3654	Sisma Y SLD	0	42.8	0	0	3.5E2	0.727
13447	3655	Sisma X SLV	43.5	0	0	0	3.5E2	0.727	13448	3655	Sisma Y SLV	0	43.5	0	0	3.5E2	0.727
13449	3655	Sisma X SLD	42.8	0	0	0	3.5E2	0.727	13450	3655	Sisma Y SLD	0	42.8	0	0	3.5E2	0.727
13451	3656	Sisma X SLV	62.1	0	0	0	5.0E2	0.727	13452	3656	Sisma Y SLV	0	62.1	0	0	5.0E2	0.727
13453	3656	Sisma X SLD	61.1	0	0	0	5.0E2	0.727	13454	3656	Sisma Y SLD	0	61.1	0	0	5.0E2	0.727
13455	3657	Sisma X SLV	60.6	0	0	0	4.9E2	0.727	13456	3657	Sisma Y SLV	0	60.6	0	0	4.9E2	0.727
13457	3657	Sisma X SLD	59.6	0	0	0	4.9E2	0.727	13458	3657	Sisma Y SLD	0	59.6	0	0	4.9E2	0.727
13459	3658	Sisma X SLV	40.5	0	0	0	3.3E2	0.727	13460	3658	Sisma Y SLV	0	40.5	0	0	3.3E2	0.727
13461	3658	Sisma X SLD	39.8	0	0	0	3.3E2	0.727	13462	3658	Sisma Y SLD	0	39.8	0	0	3.3E2	0.727
13463	3659	Sisma X SLV	40.5	0	0	0	3.3E2	0.727	13464	3659	Sisma Y SLV	0	40.5	0	0	3.3E2	0.727
13465	3659	Sisma X SLD	39.8	0	0	0	3.3E2	0.727	13466	3659	Sisma Y SLD	0	39.8	0	0	3.3E2	0.727
13467	3660	Sisma X SLV	40.5	0	0	0	3.3E2	0.727	13468	3660	Sisma Y SLV	0	40.5	0	0	3.3E2	0.727
13469	3660	Sisma X SLD	39.8	0	0	0	3.3E2	0.727	13470	3660	Sisma Y SLD	0	39.8	0	0	3.3E2	0.727
13471	3661	Sisma X SLV	40.5	0	0	0	326.02	0.727	13472	3661	Sisma Y SLV	0	40.5	0	0	326.02	0.727
13473	3661	Sisma X SLD	39.8	0	0	0	326.02	0.727	13474	3661	Sisma Y SLD	0	39.8	0	0	326.02	0.727
13475	3662	Sisma X SLV	40.4	0	0	0	3.3E2	0.727	13476	3662	Sisma Y SLV	0	40.4	0	0	3.3E2	0.727
13477	3662	Sisma X SLD	39.8	0	0	0	3.3E2	0.727	13478	3662	Sisma Y SLD	0	39.8	0	0	3.3E2	0.727
13479	3663	Sisma X SLV	40.3	0	0	0	3.2E2	0.727	13480	3663	Sisma Y SLV	0	40.3	0	0	3.2E2	0.727
13481	3663	Sisma X SLD	39.7	0	0	0	3.2E2	0.727	13482	3663	Sisma Y SLD	0	39.7	0	0	3.2E2	0.727
13483	3664	Sisma X SLV	40	0	0	0	3.2E2	0.727	13484	3664	Sisma Y SLV	0	40	0	0	3.2E2	0.727
13485	3664	Sisma X SLD	39.4	0	0	0	3.2E2	0.727	13486	3664	Sisma Y SLD	0	39.4	0	0	3.2E2	0.727
13487	3665	Sisma X SLV	39.7	0	0	0	3.2E2	0.727	13488	3665	Sisma Y SLV	0	39.7	0	0	3.2E2	0.727
13489	3665	Sisma X SLD	39	0	0	0	3.2E2	0.727	13490	3665	Sisma Y SLD	0	39	0	0	3.2E2	0.727
13491	3666	Sisma X SLV	39.7	0	0	0	3.2E2	0.727	13492	3666	Sisma Y SLV	0	39.7	0	0	3.2E2	0.727
13493	3666	Sisma X SLD	39	0	0	0	3.2E2	0.727	13494	3666	Sisma Y SLD	0	39	0	0	3.2E2	0.727
13495	3667	Sisma X SLV	39.8	0	0	0	320.94	0.727	13496	3667	Sisma Y SLV	0	39.8	0	0	320.94	0.727
13497	3667	Sisma X SLD	39.2	0	0	0	320.94	0.727	13498	3667	Sisma Y SLD	0	39.2	0	0	320.94	0.727
13499	3668	Sisma X SLV	40.4	0	0	0	3.3E2	0.727	13500	3668	Sisma Y SLV	0	40.4	0	0	3.3E2	0.727
13501	3668	Sisma X SLD	39.8	0	0	0	3.3E2	0.727	13502	3668	Sisma Y SLD	0	39.8	0	0	3.3E2	0.727
13503	3669	Sisma X SLV	44.7	0	0	0	3.6E2	0.727	13504	3669	Sisma Y SLV	0	44.7	0	0	3.6E2	0.727
13505	3669	Sisma X SLD	44	0	0	0	3.6E2	0.727	13506	3669	Sisma Y SLD	0	44	0	0	3.6E2	0.727
13507	3670	Sisma X SLV	52.9	0	0	0	426.34	0.727	13508	3670	Sisma Y SLV	0	52.9	0	0	426.34	0.727
13509	3670	Sisma X SLD	52.1	0	0	0	426.34	0.727	13510	3670	Sisma Y SLD	0	52.1	0	0	426.34	0.727
13511	3671	Sisma X SLV	52	0	0	0	4.2E2	0.727	13512	3671	Sisma Y SLV	0	52	0	0	4.2E2	0.727
13513	3671	Sisma X SLD	51.2	0	0	0	4.2E2	0.727	13514	3671	Sisma Y SLD	0	51.2	0	0	4.2E2	0.727
13515	3672	Sisma X SLV	45.1	0	0	0	3.6E2	0.727	13516	3672	Sisma Y SLV	0	45.1	0	0	3.6E2	0.727
13517	3672	Sisma X SLD	44.4	0	0	0	3.6E2	0.727	13518	3672	Sisma Y SLD	0	44.4	0	0	3.6E2	0.727
13519	3673	Sisma X SLV	45	0	0	0	3.6E2	0.727	13520	3673	Sisma Y SLV	0	45	0	0	3.6E2	0.727
13521	3673	Sisma X SLD	44.3	0	0	0	3.6E2	0.727	13522	3673	Sisma Y SLD	0	44.3	0	0	3.6E2	0.727
13523	3674	Sisma X SLV	45	0	0	0	3.6E2	0.727	13524	3674	Sisma Y SLV	0	45	0	0	3.6E2	0.727
13525	3674	Sisma X SLD	44.3	0	0	0	3.6E2	0.727	13526	3674	Sisma Y SLD	0	44.3	0	0	3.6E2	0.727
13527	3675	Sisma X SLV	44.8	0	0	0	360.95	0.727	13528	3675	Sisma Y SLV	0	44.8	0	0	360.95	0.727
13529	3675	Sisma X SLD	44.1	0	0	0	360.95	0.727	13530	3675	Sisma Y SLD	0	44.1	0	0	360.95	0.727
13531	3676	Sisma X SLV	44.4	0	0	0	3.6E2	0.727	13532	3676	Sisma Y SLV	0	44.4	0	0	3.6E2	0.727
13533	3676	Sisma X SLD	43.7	0	0	0	3.6E2	0.727	13534	3676	Sisma Y SLD	0	43.7	0	0	3.6E2	0.727
13535	3677	Sisma X SLV	43.1	0	0	0	3.5E2	0.727	13536	3677	Sisma Y SLV	0	43.1	0	0	3.5E2	0.727
13537	3677	Sisma X SLD	42.4	0	0	0	3.5E2	0.727	13538	3677	Sisma Y SLD	0	42.4	0	0	3.5E2	0.727
13539	3678	Sisma X SLV	41.6	0	0	0	3.4E2	0.727	13540	3678	Sisma Y SLV	0	41.6	0	0	3.4E2	0.727
13541	3678	Sisma X SLD	41	0	0	0	3.4E2	0.727	13542	3678	Sisma Y SLD	0	41	0	0	3.4E2	0.727
13543	3679	Sisma X SLV	41.2	0	0	0	3.3E2	0.727	13544	3679	Sisma Y SLV	0	41.2	0	0	3.3E2	0.727
13545	3679	Sisma X SLD	40.6	0	0	0	3.3E2	0.727	13546	3679	Sisma Y SLD	0	40.6	0	0	3.3E2	0.727
13547	3680	Sisma X SLV	41	0	0	0	3.3E2	0.727	13548	3680	Sisma Y SLV	0	41	0	0	3.3E2	0.727
13549	3680	Sisma X SLD	40.4	0	0	0	3.3E2	0.727	13550	3680	Sisma Y SLD	0	40.4	0	0	3.3E2	0.727
13551	3681	Sisma X SLV	40.9	0	0	0	3.3E2	0.727	13552	3681	Sisma Y SLV	0	40.9	0	0	3.3E2	0.727
13553	3681	Sisma X SLD	40.3	0	0	0	3.3E2	0.727	13554	3681	Sisma Y SLD	0	40.3	0	0	3.3E2	0.727
13555	3682	Sisma X SLV	35.6	0	0	0	2.9E2	0.727	13556	3682	Sisma Y SLV	0	35.6	0	0	2.9E2	0.727
13557	3682	Sisma X SLD	35	0	0	0	2.9E2	0.727	13558	3682	Sisma Y SLD	0	35	0	0	2.9E2	0.727
13559	3683	Sisma X SLV	34.3	0	0	0	2.8E2	0.727	13560	3683	Sisma Y SLV	0	34.3	0	0	2.8E2	0.727
13561	3683	Sisma X SLD	33.7	0	0	0	2.8E2	0.727	13562	3683	Sisma Y SLD	0	33.7	0	0	2.8E2	0.727
13563	3684	Sisma X SLV	34.3	0	0	0	2.8E2	0.727	13564	3684	Sisma Y SLV	0	34.3	0	0	2.8E2	0.727
13565	3684	Sisma X SLD	33.7	0	0	0	2.8E2	0.727	13566	3684	Sisma Y SLD	0	33.7	0	0	2.8E2	0.727
13567	3685	Sisma X SLV	34.3	0	0	0	2.8E2	0.727	13568	3685	Sisma Y SLV	0	34.3	0	0	2.8E2	0.727
13569	3685	Sisma X SLD	33.7	0	0	0	2.8E2	0.727	13570	3685	Sisma Y SLD	0	33.7	0	0	2.8E2	0.727
13571	3686	Sisma X SLV	59.4	0	0	0	478.35	0.727	13572	3686	Sisma Y SLV	0	59.4	0	0	478.35	0.727
13573	3686	Sisma X SLD	58.4	0	0	0	478.35	0.727	13574	3686	Sisma Y SLD	0	58.4	0	0	478.35	0.727
13575	3687	Sisma X SLV	57.8	0	0	0	4.7E2	0.727	13576	3687	Sisma Y SLV	0	57.8	0	0	4.7E2	0.727
13577	3687	Sisma X SLD	56.8	0	0	0	4.7E2	0.727	13578	3687	Sisma Y SLD	0	56.8	0	0	4.7E2	0.727
13579	3688	Sisma X SLV	35.7	0	0	0	2.9E2	0.727	13580	3688	Sisma Y SLV	0	35.7	0	0	2.9E2	0.727
13581	3688	Sisma X SLD	35.1	0	0	0	2.9E2	0.727	13582	3688	Sisma Y SLD	0	35.1	0	0	2.9E2	0.727
13583	3689	Sisma X SLV	35.7	0	0	0	2.9E2	0.727	13584	3689	Sisma Y SLV	0	35.7	0	0	2.9E2	0.727
13585	3689	Sisma X SLD	35.1	0	0	0	2.9E2	0.727	13586	3689	Sisma Y SLD	0	35.1	0	0	2.9E2	0.727
13587	3690	Sisma X SLV	18.4	0	0	0	1.5E2	0.727	13588	3690	Sisma Y SLV	0	18.4	0	0	1.5E2	0.727
13589	3690	Sisma X SLD	18.1	0	0	0	1.5E2	0.727	13590	3690	Sisma Y SLD	0	18.1	0	0	1.5E2	0.727
13591	3691	Sisma X SLV	18.4	0	0	0	1.5E2	0.727	13592	3691	Sisma Y SLV	0	18.4	0	0	1.5E2	0.727
13593	3691	Sisma X SLD	18.1	0	0	0	1.5E2	0.727	13594	3691	Sisma Y SLD	0	18.1	0	0	1.5E2	0.727
13595	3692	Sisma X SLV	34.7	0	0	0	279.47	0.727	13596	3692	Sisma Y SLV	0	34.7	0	0	279.47	0.727
13597	3692	Sisma X SLD	34.1	0	0	0	279.47	0.727	13598	3692	Sisma Y SLD	0	34.1	0	0	279.47	0.727
13599	3693	Sisma X SLV	19.9	0	0	0	1.6E2	0.728	13600	3693	Sisma Y SLV	0	19.9	0	0	1.6E2	0.728
13601	3693	Sisma X SLD	19.6	0	0	0	1.6E2	0.728	13602	3693	Sisma Y SLD	0	19.6	0	0	1.6E2	0.728
13603	3694	Sisma X SLV	40.2	0	0	0	3.2E2	0.728	13604	3694	Sisma Y SLV	0	40.2	0	0	3.2E2	0.728
13605	3694	Sisma X SLD	39.6	0	0	0	3.2E2	0.728	13606	3694	Sisma Y SLD	0	39.6	0	0	3.2E2	0.728
13607	3695	Sisma X SLV	18.7	0	0	0	1.5E2	0.728	13608	3695	Sisma Y SLV	0	18.7	0	0	1.5E2	0.728
13609	3695	Sisma X SLD	18.4	0	0	0	1.5E2	0.728	13610	3695	Sisma Y SLD	0	18.4	0	0	1.5E2	0.728
13611	3696	Sisma X SLV	39.7	0	0	0	3.2E2	0.728	13612	3696	Sisma Y SLV	0	39.7	0	0	3.2E2	0.728
13613	3696	Sisma X SLD	39.1	0	0	0	3.2E2	0.728	13614	3696	Sisma Y SLD	0	39.1	0	0	3.2E2	0.728
13615	3697	Sisma X SLV	18.3	0	0	0	1.5E2	0.728	13616	3697	Sisma Y SLV	0	18.3	0	0	1.5E2	0.728
13617	3697	Sisma X SLD	18	0	0	0	1.5E2	0.728	13618	3697	Sisma Y SLD	0	18	0	0	1.5E2	0.728
13619	3698	Sisma X SLV	18.3	0	0	0	1.5E2	0.728	13620	3698	Sisma Y SLV	0	18.3	0	0	1.5E2	0.728
13621	3698	Sisma X SLD	18	0	0	0	1.5E2	0.728	13622	3698	Sisma Y SLD	0	18	0	0	1.5E2	0.728
13623	3699	Sisma X SLV	40.8	0	0	0	3.3E2	0.728	13624	3699	Sisma Y SLV	0	40.8	0	0	3.3E2	0.728
13625	3699	Sisma X SLD	40.2	0	0	0	3.3E2	0.728	13626	3699	Sisma Y SLD	0	40.2	0	0	3.3E2	0.728
13627	3700	Sisma X SLV	34.5	0	0	0	2.8E2	0.728	13628	3700	Sisma Y SLV	0	34.5	0	0	2.8E2	0.728
13629	3700	Sisma X SLD	34	0	0	0	2.8E2	0.728	13630	3700	Sisma Y SLD	0	34	0	0	2.8E2	0.728
13631	3701	Sisma X SLV	20.5	0	0	0	1.6E2	0.728	13632	3701	Sisma Y SLV	0	20.5	0	0	1.6E2	0.728
13633	3701	Sisma X SLD	20.1	0	0	0	1.6E2	0.728	13634	3701	Sisma Y SLD	0	20.1	0	0	1.6E2	0.728

Indice	Nodo	Condizione	Fx	Fy	Fz	Mz	Peso	Gamma	Indice	Nodo	Condizione	Fx	Fy	Fz	Mz	Peso	Gamma
13635	3702	Sisma X SLV	39.8	0	0	0	3.2E2	0.728	13636	3702	Sisma Y SLV	0	39.8	0	0	3.2E2	0.728
13637	3702	Sisma X SLD	39.2	0	0	0	3.2E2	0.728	13638	3702	Sisma Y SLD	0	39.2	0	0	3.2E2	0.728
13639	3703	Sisma X SLV	19.8	0	0	0	1.6E2	0.728	13640	3703	Sisma Y SLV	0	19.8	0	0	1.6E2	0.728
13641	3703	Sisma X SLD	19.5	0	0	0	1.6E2	0.728	13642	3703	Sisma Y SLD	0	19.5	0	0	1.6E2	0.728
13643	3704	Sisma X SLV	18.2	0	0	0	1.5E2	0.728	13644	3704	Sisma Y SLV	0	18.2	0	0	1.5E2	0.728
13645	3704	Sisma X SLD	17.9	0	0	0	1.5E2	0.728	13646	3704	Sisma Y SLD	0	17.9	0	0	1.5E2	0.728
13647	3705	Sisma X SLV	18.2	0	0	0	1.5E2	0.728	13648	3705	Sisma Y SLV	0	18.2	0	0	1.5E2	0.728
13649	3705	Sisma X SLD	17.9	0	0	0	1.5E2	0.728	13650	3705	Sisma Y SLD	0	17.9	0	0	1.5E2	0.728
13651	3706	Sisma X SLV	39.1	0	0	0	3.1E2	0.728	13652	3706	Sisma Y SLV	0	39.1	0	0	3.1E2	0.728
13653	3706	Sisma X SLD	38.4	0	0	0	3.1E2	0.728	13654	3706	Sisma Y SLD	0	38.4	0	0	3.1E2	0.728
13655	3707	Sisma X SLV	18.6	0	0	0	1.5E2	0.728	13656	3707	Sisma Y SLV	0	18.6	0	0	1.5E2	0.728
13657	3707	Sisma X SLD	18.3	0	0	0	1.5E2	0.728	13658	3707	Sisma Y SLD	0	18.3	0	0	1.5E2	0.728
13659	3708	Sisma X SLV	40.3	0	0	0	3.2E2	0.728	13660	3708	Sisma Y SLV	0	40.3	0	0	3.2E2	0.728
13661	3708	Sisma X SLD	39.6	0	0	0	3.2E2	0.728	13662	3708	Sisma Y SLD	0	39.6	0	0	3.2E2	0.728
13663	3709	Sisma X SLV	34.3	0	0	0	2.8E2	0.728	13664	3709	Sisma Y SLV	0	34.3	0	0	2.8E2	0.728
13665	3709	Sisma X SLD	33.8	0	0	0	2.8E2	0.728	13666	3709	Sisma Y SLD	0	33.8	0	0	2.8E2	0.728
13667	3710	Sisma X SLV	35.2	0	0	0	283.42	0.728	13668	3710	Sisma Y SLV	0	35.2	0	0	283.42	0.728
13669	3710	Sisma X SLD	34.7	0	0	0	283.42	0.728	13670	3710	Sisma Y SLD	0	34.7	0	0	283.42	0.728
13671	3711	Sisma X SLV	18.1	0	0	0	1.5E2	0.728	13672	3711	Sisma Y SLV	0	18.1	0	0	1.5E2	0.728
13673	3711	Sisma X SLD	17.8	0	0	0	1.5E2	0.728	13674	3711	Sisma Y SLD	0	17.8	0	0	1.5E2	0.728
13675	3712	Sisma X SLV	18.1	0	0	0	1.5E2	0.728	13676	3712	Sisma Y SLV	0	18.1	0	0	1.5E2	0.728
13677	3712	Sisma X SLD	17.8	0	0	0	1.5E2	0.728	13678	3712	Sisma Y SLD	0	17.8	0	0	1.5E2	0.728
13679	3713	Sisma X SLV	40.5	0	0	0	3.3E2	0.729	13680	3713	Sisma Y SLV	0	40.5	0	0	3.3E2	0.729
13681	3713	Sisma X SLD	39.9	0	0	0	3.3E2	0.729	13682	3713	Sisma Y SLD	0	39.9	0	0	3.3E2	0.729
13683	3714	Sisma X SLV	18.1	0	0	0	1.5E2	0.729	13684	3714	Sisma Y SLV	0	18.1	0	0	1.5E2	0.729
13685	3714	Sisma X SLD	17.8	0	0	0	1.5E2	0.729	13686	3714	Sisma Y SLD	0	17.8	0	0	1.5E2	0.729
13687	3715	Sisma X SLV	18.1	0	0	0	1.5E2	0.729	13688	3715	Sisma Y SLV	0	18.1	0	0	1.5E2	0.729
13689	3715	Sisma X SLD	17.8	0	0	0	1.5E2	0.729	13690	3715	Sisma Y SLD	0	17.8	0	0	1.5E2	0.729
13691	3716	Sisma X SLV	19.6	0	0	0	1.6E2	0.729	13692	3716	Sisma Y SLV	0	19.6	0	0	1.6E2	0.729
13693	3716	Sisma X SLD	19.3	0	0	0	1.6E2	0.729	13694	3716	Sisma Y SLD	0	19.3	0	0	1.6E2	0.729
13695	3717	Sisma X SLV	15.2	0	0	0	1.2E2	0.729	13696	3717	Sisma Y SLV	0	15.2	0	0	1.2E2	0.729
13697	3717	Sisma X SLD	15	0	0	0	1.2E2	0.729	13698	3717	Sisma Y SLD	0	15	0	0	1.2E2	0.729
13699	3718	Sisma X SLV	41.3	0	0	0	3.3E2	0.729	13700	3718	Sisma Y SLV	0	41.3	0	0	3.3E2	0.729
13701	3718	Sisma X SLD	40.6	0	0	0	3.3E2	0.729	13702	3718	Sisma Y SLD	0	40.6	0	0	3.3E2	0.729
13703	3719	Sisma X SLV	43.9	0	0	0	3.5E2	0.729	13704	3719	Sisma Y SLV	0	43.9	0	0	3.5E2	0.729
13705	3719	Sisma X SLD	43.2	0	0	0	3.5E2	0.729	13706	3719	Sisma Y SLD	0	43.2	0	0	3.5E2	0.729
13707	3720	Sisma X SLV	39.8	0	0	0	3.2E2	0.729	13708	3720	Sisma Y SLV	0	39.8	0	0	3.2E2	0.729
13709	3720	Sisma X SLD	39.2	0	0	0	3.2E2	0.729	13710	3720	Sisma Y SLD	0	39.2	0	0	3.2E2	0.729
13711	3721	Sisma X SLV	34.1	0	0	0	2.7E2	0.729	13712	3721	Sisma Y SLV	0	34.1	0	0	2.7E2	0.729
13713	3721	Sisma X SLD	33.5	0	0	0	2.7E2	0.729	13714	3721	Sisma Y SLD	0	33.5	0	0	2.7E2	0.729
13715	3722	Sisma X SLV	34.1	0	0	0	2.7E2	0.729	13716	3722	Sisma Y SLV	0	34.1	0	0	2.7E2	0.729
13717	3722	Sisma X SLD	33.6	0	0	0	2.7E2	0.729	13718	3722	Sisma Y SLD	0	33.6	0	0	2.7E2	0.729
13719	3723	Sisma X SLV	18	0	0	0	1.4E2	0.729	13720	3723	Sisma Y SLV	0	18	0	0	1.4E2	0.729
13721	3723	Sisma X SLD	17.7	0	0	0	1.4E2	0.729	13722	3723	Sisma Y SLD	0	17.7	0	0	1.4E2	0.729
13723	3724	Sisma X SLV	18	0	0	0	1.4E2	0.729	13724	3724	Sisma Y SLV	0	18	0	0	1.4E2	0.729
13725	3724	Sisma X SLD	17.7	0	0	0	1.4E2	0.729	13726	3724	Sisma Y SLD	0	17.7	0	0	1.4E2	0.729
13727	3725	Sisma X SLV	38.6	0	0	0	3.1E2	0.729	13728	3725	Sisma Y SLV	0	38.6	0	0	3.1E2	0.729
13729	3725	Sisma X SLD	38	0	0	0	3.1E2	0.729	13730	3725	Sisma Y SLD	0	38	0	0	3.1E2	0.729
13731	3726	Sisma X SLV	18.4	0	0	0	1.5E2	0.729	13732	3726	Sisma Y SLV	0	18.4	0	0	1.5E2	0.729
13733	3726	Sisma X SLD	18.1	0	0	0	1.5E2	0.729	13734	3726	Sisma Y SLD	0	18.1	0	0	1.5E2	0.729
13735	3727	Sisma X SLV	40.2	0	0	0	3.2E2	0.729	13736	3727	Sisma Y SLV	0	40.2	0	0	3.2E2	0.729
13737	3727	Sisma X SLD	39.5	0	0	0	3.2E2	0.729	13738	3727	Sisma Y SLD	0	39.5	0	0	3.2E2	0.729
13739	3728	Sisma X SLV	20.1	0	0	0	1.6E2	0.729	13740	3728	Sisma Y SLV	0	20.1	0	0	1.6E2	0.729
13741	3728	Sisma X SLD	19.8	0	0	0	1.6E2	0.729	13742	3728	Sisma Y SLD	0	19.8	0	0	1.6E2	0.729
13743	3729	Sisma X SLV	33.1	0	0	0	2.7E2	0.729	13744	3729	Sisma Y SLV	0	33.1	0	0	2.7E2	0.729
13745	3729	Sisma X SLD	32.6	0	0	0	2.7E2	0.729	13746	3729	Sisma Y SLD	0	32.6	0	0	2.7E2	0.729
13747	3730	Sisma X SLV	19.4	0	0	0	1.6E2	0.729	13748	3730	Sisma Y SLV	0	19.4	0	0	1.6E2	0.729
13749	3730	Sisma X SLD	19.1	0	0	0	1.6E2	0.729	13750	3730	Sisma Y SLD	0	19.1	0	0	1.6E2	0.729
13751	3731	Sisma X SLV	40.2	0	0	0	3.2E2	0.729	13752	3731	Sisma Y SLV	0	40.2	0	0	3.2E2	0.729
13753	3731	Sisma X SLD	39.6	0	0	0	3.2E2	0.729	13754	3731	Sisma Y SLD	0	39.6	0	0	3.2E2	0.729
13755	3732	Sisma X SLV	33.8	0	0	0	2.7E2	0.729	13756	3732	Sisma Y SLV	0	33.8	0	0	2.7E2	0.729
13757	3732	Sisma X SLD	33.3	0	0	0	2.7E2	0.729	13758	3732	Sisma Y SLD	0	33.3	0	0	2.7E2	0.729
13759	3733	Sisma X SLV	34.7	0	0	0	2.8E2	0.729	13760	3733	Sisma Y SLV	0	34.7	0	0	2.8E2	0.729
13761	3733	Sisma X SLD	34.2	0	0	0	2.8E2	0.729	13762	3733	Sisma Y SLD	0	34.2	0	0	2.8E2	0.729
13763	3734	Sisma X SLV	17.9	0	0	0	1.4E2	0.729	13764	3734	Sisma Y SLV	0	17.9	0	0	1.4E2	0.729
13765	3734	Sisma X SLD	17.6	0	0	0	1.4E2	0.729	13766	3734	Sisma Y SLD	0	17.6	0	0	1.4E2	0.729
13767	3735	Sisma X SLV	17.9	0	0	0	1.4E2	0.729	13768	3735	Sisma Y SLV	0	17.9	0	0	1.4E2	0.729
13769	3735	Sisma X SLD	17.6	0	0	0	1.4E2	0.729	13770	3735	Sisma Y SLD	0	17.6	0	0	1.4E2	0.729
13771	3736	Sisma X SLV	38.3	0	0	0	3.1E2	0.73	13772	3736	Sisma Y SLV	0	38.3	0	0	3.1E2	0.73
13773	3736	Sisma X SLD	37.7	0	0	0	3.1E2	0.73	13774	3736	Sisma Y SLD	0	37.7	0	0	3.1E2	0.73
13775	3737	Sisma X SLV	18.2	0	0	0	1.5E2	0.73	13776	3737	Sisma Y SLV	0	18.2	0	0	1.5E2	0.73
13777	3737	Sisma X SLD	18	0	0	0	1.5E2	0.73	13778	3737	Sisma Y SLD	0	18	0	0	1.5E2	0.73
13779	3738	Sisma X SLV	37	0	0	0	3.0E2	0.73	13780	3738	Sisma Y SLV	0	37	0	0	3.0E2	0.73
13781	3738	Sisma X SLD	36.5	0	0	0	3.0E2	0.73	13782	3738	Sisma Y SLD	0	36.5	0	0	3.0E2	0.73
13783	3739	Sisma X SLV	19.1	0	0	0	1.5E2	0.73	13784	3739	Sisma Y SLV	0	19.1	0	0	1.5E2	0.73
13785	3739	Sisma X SLD	18.8	0	0	0	1.5E2	0.73	13786	3739	Sisma Y SLD	0	18.8	0	0	1.5E2	0.73
13787	3740	Sisma X SLV	15	0	0	0	1.2E2	0.73	13788	3740	Sisma Y SLV	0	15	0	0	1.2E2	0.73
13789	3740	Sisma X SLD	14.8	0	0	0	1.2E2	0.73	13790	3740	Sisma Y SLD	0	14.8	0	0	1.2E2	0.73
13791	3741	Sisma X SLV	17.7	0	0	0	1.4E2	0.73	13792	3741	Sisma Y SLV	0	17.7	0	0	1.4E2	0.73
13793	3741	Sisma X SLD	17.4	0	0	0	1.4E2	0.73	13794	3741	Sisma Y SLD	0	17.4	0	0	1.4E2	0.73
13795	3742	Sisma X SLV	17.7	0	0	0	1.4E2	0.73	13796	3742	Sisma Y SLV	0	17.7	0	0	1.4E2	0.73
13797	3742	Sisma X SLD	17.4	0	0	0	1.4E2	0.73	13798	3742	Sisma Y SLD	0	17.4	0	0	1.4E2	0.73
13799	3743	Sisma X SLV	19.8	0	0	0	1.6E2	0.73	13800	3743	Sisma Y SLV	0	19.8	0	0	1.6E2	0.73
13801	3743	Sisma X SLD	19.5	0	0	0	1.6E2	0.73	13802	3743	Sisma Y SLD	0	19.5	0	0	1.6E2	0.73
13803	3744	Sisma X SLV	31.7	0	0	0	2.5E2	0.73	13804	3744	Sisma Y SLV	0	31.7	0	0	2.5E2	0.73
13805	3744	Sisma X SLD	31.2	0	0	0	2.5E2	0.73	13806	3744	Sisma Y SLD	0	31.2	0	0	2.5E2	0.73
13807	3745	Sisma X SLV	33.5	0	0	0	2.7E2	0.73	13808	3745	Sisma Y SLV	0	33.5	0	0	2.7E2	0.73
13809	3745	Sisma X SLD	33	0	0	0	2.7E2	0.73	13810	3745	Sisma Y SLD	0	33	0	0	2.7E2	0.73
13811	3746	Sisma X SLV	17.7	0	0	0	1.4E2	0.73	13812	3746	Sisma Y SLV	0	17.7	0	0	1.4E2	0.73
13813	3746	Sisma X SLD	17.4	0	0	0	1.4E2	0.73	13814	3746	Sisma Y SLD	0	17.4	0	0	1.4E2	0.73
13815	3747	Sisma X SLV	17.7	0	0	0	1.4E2	0.73	13816	3747	Sisma Y SLV	0	17.7	0	0	1.4E2	0.73
13817	3747	Sisma X SLD	17.4	0	0	0	1.4E2	0.73	13818	3747	Sisma Y SLD	0	17.4	0	0	1.4E2	0.73
13819	3748	Sisma X SLV	40.1	0	0	0	3.2E2	0.73	13820	3748	Sisma Y SLV	0	40.1	0	0	3.2E2	0.73
13821	3748	Sisma X SLD	39.4	0	0	0	3.2E2	0.73	13822	3748	Sisma Y SLD	0	39.4	0	0	3.2E2	0.73
13823	3749	Sisma X SLV	37.9	0	0	0	3.0E2	0.73	13824	3749	Sisma Y SLV	0	37.9	0	0	3.0E2	0.73
13825	3749	Sisma X SLD	37.3	0	0	0	3.0E2	0.73	13826	3749	Sisma Y SLD	0	37.3	0	0	3.0E2	0.73
13827	3750	Sisma X SLV	42.9	0	0	0	3.4E2	0.73	13828	3750	Sisma Y SLV	0	42.9	0	0	3.4E2	0.73
13829	3750	Sisma X SLD	42.2	0	0	0	3.4E2	0.73	13830	3750	Sisma Y SLD	0	42.2	0	0	3.4E2	0.73
13831	3751	Sisma X SLV	38.9	0	0	0	312.16	0.73	13832	3751	Sisma Y SLV	0	38.9	0	0	312.16	0.73
13833	3751	Sisma X SLD	38.3	0	0	0	312.16	0.73	13834	3751	Sisma Y SLD	0	38.3	0	0	312.16	0.73
13835	3752	Sisma X SLV	33.4	0	0	0	2.7E2	0.73	13836	3752	Sisma Y SLV	0	33.4	0	0	2.7E2	0.73
13837	3752	Sisma X SLD	32.9	0	0	0	2.7E2	0.73	13838	3752	Sisma Y SLD	0	32.9	0	0	2.7E2	0.73
13839	3753	Sisma X SLV	38.1	0	0	0	3.1E2	0.73	13840	3753	Sisma Y SLV	0	38.1	0	0	3.1E2	0.73
13841	3753	Sisma X SLD	37.5	0	0	0	3.1E2	0.73	13842	3753	Sisma Y SLD	0	37.5	0	0	3.1E2	0.73

muratura

Indice	Nodo	Condizione	Fx	Fy	Fz	Mz	Peso	Gamma	Indice	Nodo	Condizione	Fx	Fy	Fz	Mz	Peso	Gamma
13843	3754	Sisma X SLV	18.1	0	0	0	1.4E2	0.73	13844	3754	Sisma Y SLV	0	18.1	0	0	1.4E2	0.73
13845	3754	Sisma X SLD	17.8	0	0	0	1.4E2	0.73	13846	3754	Sisma Y SLD	0	17.8	0	0	1.4E2	0.73
13847	3755	Sisma X SLV	34.4	0	0	0	2.8E2	0.73	13848	3755	Sisma Y SLV	0	34.4	0	0	2.8E2	0.73
13849	3755	Sisma X SLD	33.8	0	0	0	2.8E2	0.73	13850	3755	Sisma Y SLD	0	33.8	0	0	2.8E2	0.73
13851	3756	Sisma X SLV	34.2	0	0	0	2.7E2	0.73	13852	3756	Sisma Y SLV	0	34.2	0	0	2.7E2	0.73
13853	3756	Sisma X SLD	33.7	0	0	0	2.7E2	0.73	13854	3756	Sisma Y SLD	0	33.7	0	0	2.7E2	0.73
13855	3757	Sisma X SLV	18.7	0	0	0	1.5E2	0.73	13856	3757	Sisma Y SLV	0	18.7	0	0	1.5E2	0.73
13857	3757	Sisma X SLD	18.4	0	0	0	1.5E2	0.73	13858	3757	Sisma Y SLD	0	18.4	0	0	1.5E2	0.73
13859	3758	Sisma X SLV	17.6	0	0	0	1.4E2	0.73	13860	3758	Sisma Y SLV	0	17.6	0	0	1.4E2	0.73
13861	3758	Sisma X SLD	17.3	0	0	0	1.4E2	0.73	13862	3758	Sisma Y SLD	0	17.3	0	0	1.4E2	0.73
13863	3759	Sisma X SLV	17.6	0	0	0	1.4E2	0.73	13864	3759	Sisma Y SLV	0	17.6	0	0	1.4E2	0.73
13865	3759	Sisma X SLD	17.3	0	0	0	1.4E2	0.73	13866	3759	Sisma Y SLD	0	17.3	0	0	1.4E2	0.73
13867	3760	Sisma X SLV	33.2	0	0	0	2.7E2	0.73	13868	3760	Sisma Y SLV	0	33.2	0	0	2.7E2	0.73
13869	3760	Sisma X SLD	32.7	0	0	0	2.7E2	0.73	13870	3760	Sisma Y SLD	0	32.7	0	0	2.7E2	0.73
13871	3761	Sisma X SLV	17.5	0	0	0	1.4E2	0.731	13872	3761	Sisma Y SLV	0	17.5	0	0	1.4E2	0.731
13873	3761	Sisma X SLD	17.3	0	0	0	1.4E2	0.731	13874	3761	Sisma Y SLD	0	17.3	0	0	1.4E2	0.731
13875	3762	Sisma X SLV	17.5	0	0	0	1.4E2	0.731	13876	3762	Sisma Y SLV	0	17.5	0	0	1.4E2	0.731
13877	3762	Sisma X SLD	17.3	0	0	0	1.4E2	0.731	13878	3762	Sisma Y SLD	0	17.3	0	0	1.4E2	0.731
13879	3763	Sisma X SLV	17.5	0	0	0	1.4E2	0.731	13880	3763	Sisma Y SLV	0	17.5	0	0	1.4E2	0.731
13881	3763	Sisma X SLD	17.2	0	0	0	1.4E2	0.731	13882	3763	Sisma Y SLD	0	17.2	0	0	1.4E2	0.731
13883	3764	Sisma X SLV	17.5	0	0	0	1.4E2	0.731	13884	3764	Sisma Y SLV	0	17.5	0	0	1.4E2	0.731
13885	3764	Sisma X SLD	17.2	0	0	0	1.4E2	0.731	13886	3764	Sisma Y SLD	0	17.2	0	0	1.4E2	0.731
13887	3765	Sisma X SLV	19.4	0	0	0	1.6E2	0.731	13888	3765	Sisma Y SLV	0	19.4	0	0	1.6E2	0.731
13889	3765	Sisma X SLD	19.1	0	0	0	1.6E2	0.731	13890	3765	Sisma Y SLD	0	19.1	0	0	1.6E2	0.731
13891	3766	Sisma X SLV	31.8	0	0	0	2.6E2	0.731	13892	3766	Sisma Y SLV	0	31.8	0	0	2.6E2	0.731
13893	3766	Sisma X SLD	31.3	0	0	0	2.6E2	0.731	13894	3766	Sisma Y SLD	0	31.3	0	0	2.6E2	0.731
13895	3767	Sisma X SLV	40.9	0	0	0	3.3E2	0.731	13896	3767	Sisma Y SLV	0	40.9	0	0	3.3E2	0.731
13897	3767	Sisma X SLD	40.2	0	0	0	3.3E2	0.731	13898	3767	Sisma Y SLD	0	40.2	0	0	3.3E2	0.731
13899	3768	Sisma X SLV	15	0	0	0	1.2E2	0.731	13900	3768	Sisma Y SLV	0	15	0	0	1.2E2	0.731
13901	3768	Sisma X SLD	14.8	0	0	0	1.2E2	0.731	13902	3768	Sisma Y SLD	0	14.8	0	0	1.2E2	0.731
13903	3769	Sisma X SLV	38	0	0	0	3.0E2	0.731	13904	3769	Sisma Y SLV	0	38	0	0	3.0E2	0.731
13905	3769	Sisma X SLD	37.4	0	0	0	3.0E2	0.731	13906	3769	Sisma Y SLD	0	37.4	0	0	3.0E2	0.731
13907	3770	Sisma X SLV	35.3	0	0	0	2.8E2	0.731	13908	3770	Sisma Y SLV	0	35.3	0	0	2.8E2	0.731
13909	3770	Sisma X SLD	34.7	0	0	0	2.8E2	0.731	13910	3770	Sisma Y SLD	0	34.7	0	0	2.8E2	0.731
13911	3771	Sisma X SLV	42.2	0	0	0	3.4E2	0.731	13912	3771	Sisma Y SLV	0	42.2	0	0	3.4E2	0.731
13913	3771	Sisma X SLD	41.5	0	0	0	3.4E2	0.731	13914	3771	Sisma Y SLD	0	41.5	0	0	3.4E2	0.731
13915	3772	Sisma X SLV	34.2	0	0	0	2.7E2	0.731	13916	3772	Sisma Y SLV	0	34.2	0	0	2.7E2	0.731
13917	3772	Sisma X SLD	33.7	0	0	0	2.7E2	0.731	13918	3772	Sisma Y SLD	0	33.7	0	0	2.7E2	0.731
13919	3773	Sisma X SLV	17.9	0	0	0	1.4E2	0.731	13920	3773	Sisma Y SLV	0	17.9	0	0	1.4E2	0.731
13921	3773	Sisma X SLD	17.6	0	0	0	1.4E2	0.731	13922	3773	Sisma Y SLD	0	17.6	0	0	1.4E2	0.731
13923	3774	Sisma X SLV	38.2	0	0	0	306.14	0.731	13924	3774	Sisma Y SLV	0	38.2	0	0	306.14	0.731
13925	3774	Sisma X SLD	37.6	0	0	0	306.14	0.731	13926	3774	Sisma Y SLD	0	37.6	0	0	306.14	0.731
13927	3775	Sisma X SLV	33.2	0	0	0	2.7E2	0.731	13928	3775	Sisma Y SLV	0	33.2	0	0	2.7E2	0.731
13929	3775	Sisma X SLD	32.6	0	0	0	2.7E2	0.731	13930	3775	Sisma Y SLD	0	32.6	0	0	2.7E2	0.731
13931	3776	Sisma X SLV	18.1	0	0	0	1.4E2	0.731	13932	3776	Sisma Y SLV	0	18.1	0	0	1.4E2	0.731
13933	3776	Sisma X SLD	17.8	0	0	0	1.4E2	0.731	13934	3776	Sisma Y SLD	0	17.8	0	0	1.4E2	0.731
13935	3777	Sisma X SLV	32.9	0	0	0	2.6E2	0.731	13936	3777	Sisma Y SLV	0	32.9	0	0	2.6E2	0.731
13937	3777	Sisma X SLD	32.4	0	0	0	2.6E2	0.731	13938	3777	Sisma Y SLD	0	32.4	0	0	2.6E2	0.731
13939	3778	Sisma X SLV	32.9	0	0	0	2.6E2	0.731	13940	3778	Sisma Y SLV	0	32.9	0	0	2.6E2	0.731
13941	3778	Sisma X SLD	32.4	0	0	0	2.6E2	0.731	13942	3778	Sisma Y SLD	0	32.4	0	0	2.6E2	0.731
13943	3779	Sisma X SLV	41.6	0	0	0	3.3E2	0.731	13944	3779	Sisma Y SLV	0	41.6	0	0	3.3E2	0.731
13945	3779	Sisma X SLD	40.9	0	0	0	3.3E2	0.731	13946	3779	Sisma Y SLD	0	40.9	0	0	3.3E2	0.731
13947	3780	Sisma X SLV	34.4	0	0	0	2.8E2	0.731	13948	3780	Sisma Y SLV	0	34.4	0	0	2.8E2	0.731
13949	3780	Sisma X SLD	33.9	0	0	0	2.8E2	0.731	13950	3780	Sisma Y SLD	0	33.9	0	0	2.8E2	0.731
13951	3781	Sisma X SLV	37.8	0	0	0	3.0E2	0.731	13952	3781	Sisma Y SLV	0	37.8	0	0	3.0E2	0.731
13953	3781	Sisma X SLD	37.2	0	0	0	3.0E2	0.731	13954	3781	Sisma Y SLD	0	37.2	0	0	3.0E2	0.731
13955	3782	Sisma X SLV	41.8	0	0	0	3.3E2	0.731	13956	3782	Sisma Y SLV	0	41.8	0	0	3.3E2	0.731
13957	3782	Sisma X SLD	41.1	0	0	0	3.3E2	0.731	13958	3782	Sisma Y SLD	0	41.1	0	0	3.3E2	0.731
13959	3783	Sisma X SLV	18.7	0	0	0	1.5E2	0.731	13960	3783	Sisma Y SLV	0	18.7	0	0	1.5E2	0.731
13961	3783	Sisma X SLD	18.4	0	0	0	1.5E2	0.731	13962	3783	Sisma Y SLD	0	18.4	0	0	1.5E2	0.731
13963	3784	Sisma X SLV	37.8	0	0	0	3.0E2	0.731	13964	3784	Sisma Y SLV	0	37.8	0	0	3.0E2	0.731
13965	3784	Sisma X SLD	37.2	0	0	0	3.0E2	0.731	13966	3784	Sisma Y SLD	0	37.2	0	0	3.0E2	0.731
13967	3785	Sisma X SLV	32.5	0	0	0	260.07	0.731	13968	3785	Sisma Y SLV	0	32.5	0	0	260.07	0.731
13969	3785	Sisma X SLD	31.9	0	0	0	260.07	0.731	13970	3785	Sisma Y SLD	0	31.9	0	0	260.07	0.731
13971	3786	Sisma X SLV	32.7	0	0	0	2.6E2	0.731	13972	3786	Sisma Y SLV	0	32.7	0	0	2.6E2	0.731
13973	3786	Sisma X SLD	32.2	0	0	0	2.6E2	0.731	13974	3786	Sisma Y SLD	0	32.2	0	0	2.6E2	0.731
13975	3787	Sisma X SLV	32.7	0	0	0	2.6E2	0.731	13976	3787	Sisma Y SLV	0	32.7	0	0	2.6E2	0.731
13977	3787	Sisma X SLD	32.2	0	0	0	2.6E2	0.731	13978	3787	Sisma Y SLD	0	32.2	0	0	2.6E2	0.731
13979	3788	Sisma X SLV	15.2	0	0	0	1.2E2	0.731	13980	3788	Sisma Y SLV	0	15.2	0	0	1.2E2	0.731
13981	3788	Sisma X SLD	14.9	0	0	0	1.2E2	0.731	13982	3788	Sisma Y SLD	0	14.9	0	0	1.2E2	0.731
13983	3789	Sisma X SLV	16.7	0	0	0	1.3E2	0.732	13984	3789	Sisma Y SLV	0	16.7	0	0	1.3E2	0.732
13985	3789	Sisma X SLD	16.5	0	0	0	1.3E2	0.732	13986	3789	Sisma Y SLD	0	16.5	0	0	1.3E2	0.732
13987	3790	Sisma X SLV	17.8	0	0	0	1.4E2	0.732	13988	3790	Sisma Y SLV	0	17.8	0	0	1.4E2	0.732
13989	3790	Sisma X SLD	17.5	0	0	0	1.4E2	0.732	13990	3790	Sisma Y SLD	0	17.5	0	0	1.4E2	0.732
13991	3791	Sisma X SLV	32.6	0	0	0	2.6E2	0.732	13992	3791	Sisma Y SLV	0	32.6	0	0	2.6E2	0.732
13993	3791	Sisma X SLD	32.1	0	0	0	2.6E2	0.732	13994	3791	Sisma Y SLD	0	32.1	0	0	2.6E2	0.732
13995	3792	Sisma X SLV	15.6	0	0	0	1.2E2	0.732	13996	3792	Sisma Y SLV	0	15.6	0	0	1.2E2	0.732
13997	3792	Sisma X SLD	15.3	0	0	0	1.2E2	0.732	13998	3792	Sisma Y SLD	0	15.3	0	0	1.2E2	0.732
13999	3793	Sisma X SLV	18	0	0	0	1.4E2	0.732	14000	3793	Sisma Y SLV	0	18	0	0	1.4E2	0.732
14001	3793	Sisma X SLD	17.7	0	0	0	1.4E2	0.732	14002	3793	Sisma Y SLD	0	17.7	0	0	1.4E2	0.732
14003	3794	Sisma X SLV	32.4	0	0	0	2.6E2	0.732	14004	3794	Sisma Y SLV	0	32.4	0	0	2.6E2	0.732
14005	3794	Sisma X SLD	31.8	0	0	0	2.6E2	0.732	14006	3794	Sisma Y SLD	0	31.8	0	0	2.6E2	0.732
14007	3795	Sisma X SLV	17.8	0	0	0	1.4E2	0.732	14008	3795	Sisma Y SLV	0	17.8	0	0	1.4E2	0.732
14009	3795	Sisma X SLD	17.5	0	0	0	1.4E2	0.732	14010	3795	Sisma Y SLD	0	17.5	0	0	1.4E2	0.732
14011	3796	Sisma X SLV	32.4	0	0	0	259.08	0.732	14012	3796	Sisma Y SLV	0	32.4	0	0	259.08	0.732
14013	3796	Sisma X SLD	31.8	0	0	0	259.08	0.732	14014	3796	Sisma Y SLD	0	31.8	0	0	259.08	0.732
14015	3797	Sisma X SLV	30.4	0	0	0	2.4E2	0.733	14016	3797	Sisma Y SLV	0	30.4	0	0	2.4E2	0.733
14017	3797	Sisma X SLD	29.9	0	0	0	2.4E2	0.733	14018	3797	Sisma Y SLD	0	29.9	0	0	2.4E2	0.733
14019	3798	Sisma X SLV	30	0	0	0	2.4E2	0.738	14020	3798	Sisma Y SLV	0	30	0	0	2.4E2	0.738
14021	3798	Sisma X SLD	29.5	0	0	0	2.4E2	0.738	14022	3798	Sisma Y SLD	0	29.5	0	0	2.4E2	0.738
14023	3799	Sisma X SLV	13.9	0	0	0	1.1E2	0.738	14024	3799	Sisma Y SLV	0	13.9	0	0	1.1E2	0.738
14025	3799	Sisma X SLD	13.7	0	0	0	1.1E2	0.738	14026	3799	Sisma Y SLD	0	13.7	0	0	1.1E2	0.738
14027	3800	Sisma X SLV	14.6	0	0	0	1.2E2	0.738	14028	3800	Sisma Y SLV	0	14.6	0	0	1.2E2	0.738
14029	3800	Sisma X SLD	14.4	0	0	0	1.2E2	0.738	14030	3800	Sisma Y SLD	0	14.4	0	0	1.2E2	0.738
14031	3801	Sisma X SLV	27.5	0	0	0	2.2E2	0.738	14032	3801	Sisma Y SLV	0	27.5	0	0	2.2E2	0.738
14033	3801	Sisma X SLD	27.1	0	0	0	2.2E2	0.738	14034	3801	Sisma Y SLD	0	27.1	0	0	2.2E2	0.738
14035	3802	Sisma X SLV	30.7	0	0	0	2.4E2	0.739	14036	3802	Sisma Y SLV	0	30.7	0	0	2.4E2	0.739
14037	3802	Sisma X SLD	30.2	0	0	0	2.4E2	0.739	14038	3802	Sisma Y SLD	0	30.2	0	0	2.4E2	0.739
14039	3803	Sisma X SLV	27.2	0	0	0	2.1E2	0.743	14040	3803	Sisma Y SLV	0	27.2	0	0	2.1E2	0.743
14041	3803	Sisma X SLD	26.8	0	0	0	2.1E2	0.743	14042	3803	Sisma Y SLD	0	26.8	0	0	2.1E2	0.743
14043	3804	Sisma X SLV	28	0	0	0	2.2E2	0.743	14044	3804	Sisma Y SLV	0	28	0	0	2.2E2	0.743

Indice	Nodo	Condizione	Fx	Fy	Fz	Mz	Peso	Gamma	Indice	Nodo	Condizione	Fx	Fy	Fz	Mz	Peso	Gamma
14045	3804	Sisma X SLD	27.6	0	0	0	2.2E2	0.743	14046	3804	Sisma Y SLD	0	27.6	0	0	2.2E2	0.743
14047	3805	Sisma X SLV	13.3	0	0	0	1.0E2	0.744	14048	3805	Sisma Y SLV	0	13.3	0	0	1.0E2	0.744
14049	3805	Sisma X SLD	13.1	0	0	0	1.0E2	0.744	14050	3805	Sisma Y SLD	0	13.1	0	0	1.0E2	0.744
14051	3806	Sisma X SLV	13.5	0	0	0	1.1E2	0.744	14052	3806	Sisma Y SLV	0	13.5	0	0	1.1E2	0.744
14053	3806	Sisma X SLD	13.3	0	0	0	1.1E2	0.744	14054	3806	Sisma Y SLD	0	13.3	0	0	1.1E2	0.744
14055	3807	Sisma X SLV	26	0	0	0	2.0E2	0.745	14056	3807	Sisma Y SLV	0	26	0	0	2.0E2	0.745
14057	3807	Sisma X SLD	25.6	0	0	0	2.0E2	0.745	14058	3807	Sisma Y SLD	0	25.6	0	0	2.0E2	0.745
14059	3808	Sisma X SLV	25.1	0	0	0	2.0E2	0.745	14060	3808	Sisma Y SLV	0	25.1	0	0	2.0E2	0.745
14061	3808	Sisma X SLD	24.7	0	0	0	2.0E2	0.745	14062	3808	Sisma Y SLD	0	24.7	0	0	2.0E2	0.745
14063	3809	Sisma X SLV	13.6	0	0	0	106.63	0.745	14064	3809	Sisma Y SLV	0	13.6	0	0	106.63	0.745
14065	3809	Sisma X SLD	13.3	0	0	0	106.63	0.745	14066	3809	Sisma Y SLD	0	13.3	0	0	106.63	0.745
14067	3810	Sisma X SLV	13.6	0	0	0	1.1E2	0.746	14068	3810	Sisma Y SLV	0	13.6	0	0	1.1E2	0.746
14069	3810	Sisma X SLD	13.4	0	0	0	1.1E2	0.746	14070	3810	Sisma Y SLD	0	13.4	0	0	1.1E2	0.746
14071	3811	Sisma X SLV	13.2	0	0	0	1.0E2	0.746	14072	3811	Sisma Y SLV	0	13.2	0	0	1.0E2	0.746
14073	3811	Sisma X SLD	13	0	0	0	1.0E2	0.746	14074	3811	Sisma Y SLD	0	13	0	0	1.0E2	0.746
14075	3812	Sisma X SLV	13.4	0	0	0	1.1E2	0.747	14076	3812	Sisma Y SLV	0	13.4	0	0	1.1E2	0.747
14077	3812	Sisma X SLD	13.2	0	0	0	1.1E2	0.747	14078	3812	Sisma Y SLD	0	13.2	0	0	1.1E2	0.747
14079	3813	Sisma X SLV	13.6	0	0	0	1.1E2	0.747	14080	3813	Sisma Y SLV	0	13.6	0	0	1.1E2	0.747
14081	3813	Sisma X SLD	13.4	0	0	0	1.1E2	0.747	14082	3813	Sisma Y SLD	0	13.4	0	0	1.1E2	0.747
14083	3814	Sisma X SLV	13.1	0	0	0	1.0E2	0.748	14084	3814	Sisma Y SLV	0	13.1	0	0	1.0E2	0.748
14085	3814	Sisma X SLD	12.9	0	0	0	1.0E2	0.748	14086	3814	Sisma Y SLD	0	12.9	0	0	1.0E2	0.748
14087	3815	Sisma X SLV	13.3	0	0	0	1.0E2	0.751	14088	3815	Sisma Y SLV	0	13.3	0	0	1.0E2	0.751
14089	3815	Sisma X SLD	13.1	0	0	0	1.0E2	0.751	14090	3815	Sisma Y SLD	0	13.1	0	0	1.0E2	0.751
14091	2	Sisma X SLV	4.8E4	0	0	0	3.6E5	0.795	14092	2	Sisma Y SLV	0	4.8E4	0	0	3.6E5	0.795
14093	2	Eccentricità Y per sisma X SLV	0	0	0	-3.5E6	3.6E5	0.795	14094	2	Eccentricità X per sisma Y SLV	0	0	0	4.3E6	3.6E5	0.795
14095	2	Sisma X SLD	4.7E4	0	0	0	3.6E5	0.795	14096	2	Sisma Y SLD	0	4.7E4	0	0	3.6E5	0.795
14097	2	Eccentricità Y per sisma X SLD	0	0	0	-3.5E6	3.6E5	0.795	14098	2	Eccentricità X per sisma Y SLD	0	0	0	4.2E6	3.6E5	0.795
14099	4253	Sisma X SLV	21.9	0	0	0	1.5E2	0.845	14100	4253	Sisma Y SLV	0	21.9	0	0	1.5E2	0.845
14101	4253	Sisma X SLD	21.6	0	0	0	1.5E2	0.845	14102	4253	Sisma Y SLD	0	21.6	0	0	1.5E2	0.845
14103	4254	Sisma X SLV	21.9	0	0	0	1.5E2	0.845	14104	4254	Sisma Y SLV	0	21.9	0	0	1.5E2	0.845
14105	4254	Sisma X SLD	21.6	0	0	0	1.5E2	0.845	14106	4254	Sisma Y SLD	0	21.6	0	0	1.5E2	0.845
14107	4255	Sisma X SLV	23.5	0	0	0	1.6E2	0.849	14108	4255	Sisma Y SLV	0	23.5	0	0	1.6E2	0.849
14109	4255	Sisma X SLD	23.1	0	0	0	1.6E2	0.849	14110	4255	Sisma Y SLD	0	23.1	0	0	1.6E2	0.849
14111	4256	Sisma X SLV	23.5	0	0	0	1.6E2	0.849	14112	4256	Sisma Y SLV	0	23.5	0	0	1.6E2	0.849
14113	4256	Sisma X SLD	23.1	0	0	0	1.6E2	0.849	14114	4256	Sisma Y SLD	0	23.1	0	0	1.6E2	0.849
14115	4257	Sisma X SLV	24	0	0	0	1.7E2	0.85	14116	4257	Sisma Y SLV	0	24	0	0	1.7E2	0.85
14117	4257	Sisma X SLD	23.6	0	0	0	1.7E2	0.85	14118	4257	Sisma Y SLD	0	23.6	0	0	1.7E2	0.85
14119	4258	Sisma X SLV	24	0	0	0	1.7E2	0.85	14120	4258	Sisma Y SLV	0	24	0	0	1.7E2	0.85
14121	4258	Sisma X SLD	23.6	0	0	0	1.7E2	0.85	14122	4258	Sisma Y SLD	0	23.6	0	0	1.7E2	0.85
14123	4259	Sisma X SLV	36	0	0	0	2.4E2	0.861	14124	4259	Sisma Y SLV	0	36	0	0	2.4E2	0.861
14125	4259	Sisma X SLD	35.4	0	0	0	2.4E2	0.861	14126	4259	Sisma Y SLD	0	35.4	0	0	2.4E2	0.861
14127	4260	Sisma X SLV	32.5	0	0	0	2.2E2	0.861	14128	4260	Sisma Y SLV	0	32.5	0	0	2.2E2	0.861
14129	4260	Sisma X SLD	31.9	0	0	0	2.2E2	0.861	14130	4260	Sisma Y SLD	0	31.9	0	0	2.2E2	0.861
14131	4261	Sisma X SLV	53.8	0	0	0	3.7E2	0.861	14132	4261	Sisma Y SLV	0	53.8	0	0	3.7E2	0.861
14133	4261	Sisma X SLD	53	0	0	0	3.7E2	0.861	14134	4261	Sisma Y SLD	0	53	0	0	3.7E2	0.861
14135	4262	Sisma X SLV	49.5	0	0	0	3.4E2	0.861	14136	4262	Sisma Y SLV	0	49.5	0	0	3.4E2	0.861
14137	4262	Sisma X SLD	48.8	0	0	0	3.4E2	0.861	14138	4262	Sisma Y SLD	0	48.8	0	0	3.4E2	0.861
14139	4263	Sisma X SLV	33.1	0	0	0	2.3E2	0.861	14140	4263	Sisma Y SLV	0	33.1	0	0	2.3E2	0.861
14141	4263	Sisma X SLD	32.5	0	0	0	2.3E2	0.861	14142	4263	Sisma Y SLD	0	32.5	0	0	2.3E2	0.861
14143	4264	Sisma X SLV	33.1	0	0	0	2.3E2	0.861	14144	4264	Sisma Y SLV	0	33.1	0	0	2.3E2	0.861
14145	4264	Sisma X SLD	32.5	0	0	0	2.3E2	0.861	14146	4264	Sisma Y SLD	0	32.5	0	0	2.3E2	0.861
14147	4265	Sisma X SLV	33.1	0	0	0	2.3E2	0.861	14148	4265	Sisma Y SLV	0	33.1	0	0	2.3E2	0.861
14149	4265	Sisma X SLD	32.5	0	0	0	2.3E2	0.861	14150	4265	Sisma Y SLD	0	32.5	0	0	2.3E2	0.861
14151	4266	Sisma X SLV	36.8	0	0	0	2.5E2	0.861	14152	4266	Sisma Y SLV	0	36.8	0	0	2.5E2	0.861
14153	4266	Sisma X SLD	36.2	0	0	0	2.5E2	0.861	14154	4266	Sisma Y SLD	0	36.2	0	0	2.5E2	0.861
14155	4267	Sisma X SLV	57.8	0	0	0	3.9E2	0.861	14156	4267	Sisma Y SLV	0	57.8	0	0	3.9E2	0.861
14157	4267	Sisma X SLD	56.9	0	0	0	3.9E2	0.861	14158	4267	Sisma Y SLD	0	56.9	0	0	3.9E2	0.861
14159	4268	Sisma X SLV	56.8	0	0	0	3.9E2	0.861	14160	4268	Sisma Y SLV	0	56.8	0	0	3.9E2	0.861
14161	4268	Sisma X SLD	55.9	0	0	0	3.9E2	0.861	14162	4268	Sisma Y SLD	0	55.9	0	0	3.9E2	0.861
14163	4269	Sisma X SLV	21.3	0	0	0	1.4E2	0.861	14164	4269	Sisma Y SLV	0	21.3	0	0	1.4E2	0.861
14165	4269	Sisma X SLD	20.9	0	0	0	1.4E2	0.861	14166	4269	Sisma Y SLD	0	20.9	0	0	1.4E2	0.861
14167	4270	Sisma X SLV	21.3	0	0	0	1.4E2	0.861	14168	4270	Sisma Y SLV	0	21.3	0	0	1.4E2	0.861
14169	4270	Sisma X SLD	20.9	0	0	0	1.4E2	0.861	14170	4270	Sisma Y SLD	0	20.9	0	0	1.4E2	0.861
14171	4271	Sisma X SLV	21.3	0	0	0	1.4E2	0.861	14172	4271	Sisma Y SLV	0	21.3	0	0	1.4E2	0.861
14173	4271	Sisma X SLD	20.9	0	0	0	1.4E2	0.861	14174	4271	Sisma Y SLD	0	20.9	0	0	1.4E2	0.861
14175	4272	Sisma X SLV	21.3	0	0	0	1.4E2	0.861	14176	4272	Sisma Y SLV	0	21.3	0	0	1.4E2	0.861
14177	4272	Sisma X SLD	20.9	0	0	0	1.4E2	0.861	14178	4272	Sisma Y SLD	0	20.9	0	0	1.4E2	0.861
14179	4273	Sisma X SLV	21.3	0	0	0	1.4E2	0.861	14180	4273	Sisma Y SLV	0	21.3	0	0	1.4E2	0.861
14181	4273	Sisma X SLD	20.9	0	0	0	1.4E2	0.861	14182	4273	Sisma Y SLD	0	20.9	0	0	1.4E2	0.861
14183	4274	Sisma X SLV	21.3	0	0	0	1.4E2	0.861	14184	4274	Sisma Y SLV	0	21.3	0	0	1.4E2	0.861
14185	4274	Sisma X SLD	20.9	0	0	0	1.4E2	0.861	14186	4274	Sisma Y SLD	0	20.9	0	0	1.4E2	0.861
14187	4275	Sisma X SLV	21.3	0	0	0	1.4E2	0.861	14188	4275	Sisma Y SLV	0	21.3	0	0	1.4E2	0.861
14189	4275	Sisma X SLD	20.9	0	0	0	1.4E2	0.861	14190	4275	Sisma Y SLD	0	20.9	0	0	1.4E2	0.861
14191	4276	Sisma X SLV	21.3	0	0	0	1.4E2	0.861	14192	4276	Sisma Y SLV	0	21.3	0	0	1.4E2	0.861
14193	4276	Sisma X SLD	20.9	0	0	0	1.4E2	0.861	14194	4276	Sisma Y SLD	0	20.9	0	0	1.4E2	0.861
14195	4277	Sisma X SLV	21.3	0	0	0	1.4E2	0.861	14196	4277	Sisma Y SLV	0	21.3	0	0	1.4E2	0.861
14197	4277	Sisma X SLD	20.9	0	0	0	1.4E2	0.861	14198	4277	Sisma Y SLD	0	20.9	0	0	1.4E2	0.861
14199	4278	Sisma X SLV	21.3	0	0	0	1.5E2	0.861	14200	4278	Sisma Y SLV	0	21.3	0	0	1.5E2	0.861
14201	4278	Sisma X SLD	21	0	0	0	1.5E2	0.861	14202	4278	Sisma Y SLD	0	21	0	0	1.5E2	0.861
14203	4279	Sisma X SLV	21.5	0	0	0	1.5E2	0.861	14204	4279	Sisma Y SLV	0	21.5	0	0	1.5E2	0.861
14205	4279	Sisma X SLD	21.1	0	0	0	1.5E2	0.861	14206	4279	Sisma Y SLD	0	21.1	0	0	1.5E2	0.861
14207	4280	Sisma X SLV	21.8	0	0	0	1.5E2	0.861	14208	4280	Sisma Y SLV	0	21.8	0	0	1.5E2	0.861
14209	4280	Sisma X SLD	21.4	0	0	0	1.5E2	0.861	14210	4280	Sisma Y SLD	0	21.4	0	0	1.5E2	0.861
14211	4281	Sisma X SLV	23	0	0	0	1.6E2	0.861	14212	4281	Sisma Y SLV	0	23	0	0	1.6E2	0.861
14213	4281	Sisma X SLD	22.6	0	0	0	1.6E2	0.861	14214	4281	Sisma Y SLD	0	22.6	0	0	1.6E2	0.861
14215	4282	Sisma X SLV	45.8	0	0	0	3.1E2	0.861	14216	4282	Sisma Y SLV	0	45.8	0	0	3.1E2	0.861
14217	4282	Sisma X SLD	45.1	0	0	0	3.1E2	0.861	14218	4282	Sisma Y SLD	0	45.1	0	0	3.1E2	0.861
14219	4283	Sisma X SLV	36.4	0	0	0	2.5E2	0.861	14220	4283	Sisma Y SLV	0	36.4	0	0	2.5E2	0.861
14221	4283	Sisma X SLD	35.9	0	0	0	2.5E2	0.861	14222	4283	Sisma Y SLD	0	35.9	0	0	2.5E2	0.861
14223	4284	Sisma X SLV	56.3	0	0	0	3.8E2	0.861	14224	4284	Sisma Y SLV	0	56.3	0	0	3.8E2	0.861
14225	4284	Sisma X SLD	55.4	0	0	0	3.8E2	0.861	14226	4284	Sisma Y SLD	0	55.4	0	0	3.8E2	0.861
14227	4285	Sisma X SLV	33.1	0	0	0	2.3E2	0.861	14228	4285	Sisma Y SLV	0	33.1	0	0	2.3E2	0.861
14229	4285	Sisma X SLD	32.5	0	0	0	2.3E2	0.861	14230	4285	Sisma Y SLD	0	32.5	0	0	2.3E2	0.861
14231	4286	Sisma X SLV	33.1	0	0	0	2.3E2	0.861	14232	4286	Sisma Y SLV	0	33.1	0	0	2.3E2	0.861
14233	4286	Sisma X SLD	32.5	0	0	0	2.3E2	0.861	14234	4286	Sisma Y SLD	0	32.5	0	0	2.3E2	0.861
14235	4287	Sisma X SLV	33.1	0	0	0	225.02	0.861	14236	4287	Sisma Y SLV	0	33.1	0	0	225.02	0.861
14237	4287	Sisma X SLD	32.5	0	0	0	225.02	0.861	14238	4287	Sisma Y SLD	0	32.5	0	0	225.02	0.861
14239	4288	Sisma X SLV	37.7	0	0	0	2.6E2	0.861	14240	4288	Sisma Y SLV	0	37.7	0	0	2.6E2	0.861
14241	4288	Sisma X SLD	37.1	0	0	0	2.6E2	0.861	14242	4288	Sisma Y SLD	0	37.1	0	0	2.6E2	0.861
14243	4289	Sisma X SLV	32.5	0	0	0	2.2E2	0.861	14244	4289	Sisma Y SLV	0	32.5	0	0	2.2E2	0.861

muratura

Indice	Nodo	Condizione	Fx	Fy	Fz	Mz	Peso	Gamma	Indice	Nodo	Condizione	Fx	Fy	Fz	Mz	Peso	Gamma
14245	4289	Sisma X SLD	32	0	0	0	2.2E2	0.861	14246	4289	Sisma Y SLD	0	32	0	0	2.2E2	0.861
14247	4290	Sisma X SLV	33.1	0	0	0	225.04	0.861	14248	4290	Sisma Y SLV	0	33.1	0	0	225.04	0.861
14249	4290	Sisma X SLD	32.5	0	0	0	225.04	0.861	14250	4290	Sisma Y SLD	0	32.5	0	0	225.04	0.861
14251	4291	Sisma X SLV	33	0	0	0	2.2E2	0.861	14252	4291	Sisma Y SLV	0	33	0	0	2.2E2	0.861
14253	4291	Sisma X SLD	32.4	0	0	0	2.2E2	0.861	14254	4291	Sisma Y SLD	0	32.4	0	0	2.2E2	0.861
14255	4292	Sisma X SLV	33.1	0	0	0	2.2E2	0.861	14256	4292	Sisma Y SLV	0	33.1	0	0	2.2E2	0.861
14257	4292	Sisma X SLD	32.5	0	0	0	2.2E2	0.861	14258	4292	Sisma Y SLD	0	32.5	0	0	2.2E2	0.861
14259	4293	Sisma X SLV	32.5	0	0	0	2.2E2	0.861	14260	4293	Sisma Y SLV	0	32.5	0	0	2.2E2	0.861
14261	4293	Sisma X SLD	32	0	0	0	2.2E2	0.861	14262	4293	Sisma Y SLD	0	32	0	0	2.2E2	0.861
14263	4294	Sisma X SLV	33.1	0	0	0	2.2E2	0.861	14264	4294	Sisma Y SLV	0	33.1	0	0	2.2E2	0.861
14265	4294	Sisma X SLD	32.5	0	0	0	2.2E2	0.861	14266	4294	Sisma Y SLD	0	32.5	0	0	2.2E2	0.861
14267	4295	Sisma X SLV	33	0	0	0	2.2E2	0.861	14268	4295	Sisma Y SLV	0	33	0	0	2.2E2	0.861
14269	4295	Sisma X SLD	32.5	0	0	0	2.2E2	0.861	14270	4295	Sisma Y SLD	0	32.5	0	0	2.2E2	0.861
14271	4296	Sisma X SLV	33	0	0	0	2.2E2	0.861	14272	4296	Sisma Y SLV	0	33	0	0	2.2E2	0.861
14273	4296	Sisma X SLD	32.5	0	0	0	2.2E2	0.861	14274	4296	Sisma Y SLD	0	32.5	0	0	2.2E2	0.861
14275	4297	Sisma X SLV	32.7	0	0	0	2.2E2	0.861	14276	4297	Sisma Y SLV	0	32.7	0	0	2.2E2	0.861
14277	4297	Sisma X SLD	32.1	0	0	0	2.2E2	0.861	14278	4297	Sisma Y SLD	0	32.1	0	0	2.2E2	0.861
14279	4298	Sisma X SLV	33	0	0	0	2.2E2	0.861	14280	4298	Sisma Y SLV	0	33	0	0	2.2E2	0.861
14281	4298	Sisma X SLD	32.5	0	0	0	2.2E2	0.861	14282	4298	Sisma Y SLD	0	32.5	0	0	2.2E2	0.861
14283	4299	Sisma X SLV	33.1	0	0	0	2.3E2	0.861	14284	4299	Sisma Y SLV	0	33.1	0	0	2.3E2	0.861
14285	4299	Sisma X SLD	32.6	0	0	0	2.3E2	0.861	14286	4299	Sisma Y SLD	0	32.6	0	0	2.3E2	0.861
14287	4300	Sisma X SLV	33	0	0	0	2.2E2	0.861	14288	4300	Sisma Y SLV	0	33	0	0	2.2E2	0.861
14289	4300	Sisma X SLD	32.5	0	0	0	2.2E2	0.861	14290	4300	Sisma Y SLD	0	32.5	0	0	2.2E2	0.861
14291	4301	Sisma X SLV	20.9	0	0	0	1.4E2	0.861	14292	4301	Sisma Y SLV	0	20.9	0	0	1.4E2	0.861
14293	4301	Sisma X SLD	20.5	0	0	0	1.4E2	0.861	14294	4301	Sisma Y SLD	0	20.5	0	0	1.4E2	0.861
14295	4302	Sisma X SLV	34.6	0	0	0	2.4E2	0.861	14296	4302	Sisma Y SLV	0	34.6	0	0	2.4E2	0.861
14297	4302	Sisma X SLD	34.1	0	0	0	2.4E2	0.861	14298	4302	Sisma Y SLD	0	34.1	0	0	2.4E2	0.861
14299	4303	Sisma X SLV	35.1	0	0	0	2.4E2	0.861	14300	4303	Sisma Y SLV	0	35.1	0	0	2.4E2	0.861
14301	4303	Sisma X SLD	34.5	0	0	0	2.4E2	0.861	14302	4303	Sisma Y SLD	0	34.5	0	0	2.4E2	0.861
14303	4304	Sisma X SLV	35.7	0	0	0	2.4E2	0.861	14304	4304	Sisma Y SLV	0	35.7	0	0	2.4E2	0.861
14305	4304	Sisma X SLD	35.1	0	0	0	2.4E2	0.861	14306	4304	Sisma Y SLD	0	35.1	0	0	2.4E2	0.861
14307	4305	Sisma X SLV	33	0	0	0	2.2E2	0.861	14308	4305	Sisma Y SLV	0	33	0	0	2.2E2	0.861
14309	4305	Sisma X SLD	32.5	0	0	0	2.2E2	0.861	14310	4305	Sisma Y SLD	0	32.5	0	0	2.2E2	0.861
14311	4306	Sisma X SLV	33	0	0	0	2.2E2	0.861	14312	4306	Sisma Y SLV	0	33	0	0	2.2E2	0.861
14313	4306	Sisma X SLD	32.5	0	0	0	2.2E2	0.861	14314	4306	Sisma Y SLD	0	32.5	0	0	2.2E2	0.861
14315	4307	Sisma X SLV	33.4	0	0	0	227.65	0.861	14316	4307	Sisma Y SLV	0	33.4	0	0	227.65	0.861
14317	4307	Sisma X SLD	32.9	0	0	0	227.65	0.861	14318	4307	Sisma Y SLD	0	32.9	0	0	227.65	0.861
14319	4308	Sisma X SLV	32.9	0	0	0	2.2E2	0.861	14320	4308	Sisma Y SLV	0	32.9	0	0	2.2E2	0.861
14321	4308	Sisma X SLD	32.4	0	0	0	2.2E2	0.861	14322	4308	Sisma Y SLD	0	32.4	0	0	2.2E2	0.861
14323	4309	Sisma X SLV	34.9	0	0	0	2.4E2	0.861	14324	4309	Sisma Y SLV	0	34.9	0	0	2.4E2	0.861
14325	4309	Sisma X SLD	34.4	0	0	0	2.4E2	0.861	14326	4309	Sisma Y SLD	0	34.4	0	0	2.4E2	0.861
14327	4310	Sisma X SLV	20.9	0	0	0	1.4E2	0.861	14328	4310	Sisma Y SLV	0	20.9	0	0	1.4E2	0.861
14329	4310	Sisma X SLD	20.5	0	0	0	1.4E2	0.861	14330	4310	Sisma Y SLD	0	20.5	0	0	1.4E2	0.861
14331	4311	Sisma X SLV	35.6	0	0	0	2.4E2	0.861	14332	4311	Sisma Y SLV	0	35.6	0	0	2.4E2	0.861
14333	4311	Sisma X SLD	35	0	0	0	2.4E2	0.861	14334	4311	Sisma Y SLD	0	35	0	0	2.4E2	0.861
14335	4312	Sisma X SLV	33.9	0	0	0	2.3E2	0.861	14336	4312	Sisma Y SLV	0	33.9	0	0	2.3E2	0.861
14337	4312	Sisma X SLD	33.4	0	0	0	2.3E2	0.861	14338	4312	Sisma Y SLD	0	33.4	0	0	2.3E2	0.861
14339	4313	Sisma X SLV	33	0	0	0	2.2E2	0.861	14340	4313	Sisma Y SLV	0	33	0	0	2.2E2	0.861
14341	4313	Sisma X SLD	32.5	0	0	0	2.2E2	0.861	14342	4313	Sisma Y SLD	0	32.5	0	0	2.2E2	0.861
14343	4314	Sisma X SLV	33.2	0	0	0	2.3E2	0.861	14344	4314	Sisma Y SLV	0	33.2	0	0	2.3E2	0.861
14345	4314	Sisma X SLD	32.7	0	0	0	2.3E2	0.861	14346	4314	Sisma Y SLD	0	32.7	0	0	2.3E2	0.861
14347	4315	Sisma X SLV	33	0	0	0	2.2E2	0.861	14348	4315	Sisma Y SLV	0	33	0	0	2.2E2	0.861
14349	4315	Sisma X SLD	32.5	0	0	0	2.2E2	0.861	14350	4315	Sisma Y SLD	0	32.5	0	0	2.2E2	0.861
14351	4316	Sisma X SLV	33.5	0	0	0	2.3E2	0.861	14352	4316	Sisma Y SLV	0	33.5	0	0	2.3E2	0.861
14353	4316	Sisma X SLD	33	0	0	0	2.3E2	0.861	14354	4316	Sisma Y SLD	0	33	0	0	2.3E2	0.861
14355	4317	Sisma X SLV	20.9	0	0	0	1.4E2	0.861	14356	4317	Sisma Y SLV	0	20.9	0	0	1.4E2	0.861
14357	4317	Sisma X SLD	20.6	0	0	0	1.4E2	0.861	14358	4317	Sisma Y SLD	0	20.6	0	0	1.4E2	0.861
14359	4318	Sisma X SLV	37.4	0	0	0	2.5E2	0.861	14360	4318	Sisma Y SLV	0	37.4	0	0	2.5E2	0.861
14361	4318	Sisma X SLD	36.8	0	0	0	2.5E2	0.861	14362	4318	Sisma Y SLD	0	36.8	0	0	2.5E2	0.861
14363	4319	Sisma X SLV	37.1	0	0	0	252.25	0.861	14364	4319	Sisma Y SLV	0	37.1	0	0	252.25	0.861
14365	4319	Sisma X SLD	36.5	0	0	0	252.25	0.861	14366	4319	Sisma Y SLD	0	36.5	0	0	252.25	0.861
14367	4320	Sisma X SLV	34.8	0	0	0	237.14	0.861	14368	4320	Sisma Y SLV	0	34.8	0	0	237.14	0.861
14369	4320	Sisma X SLD	34.3	0	0	0	237.14	0.861	14370	4320	Sisma Y SLD	0	34.3	0	0	237.14	0.861
14371	4321	Sisma X SLV	33.1	0	0	0	2.2E2	0.861	14372	4321	Sisma Y SLV	0	33.1	0	0	2.2E2	0.861
14373	4321	Sisma X SLD	32.5	0	0	0	2.2E2	0.861	14374	4321	Sisma Y SLD	0	32.5	0	0	2.2E2	0.861
14375	4322	Sisma X SLV	34.4	0	0	0	2.3E2	0.861	14376	4322	Sisma Y SLV	0	34.4	0	0	2.3E2	0.861
14377	4322	Sisma X SLD	33.9	0	0	0	2.3E2	0.861	14378	4322	Sisma Y SLD	0	33.9	0	0	2.3E2	0.861
14379	4323	Sisma X SLV	20.9	0	0	0	142.2	0.861	14380	4323	Sisma Y SLV	0	20.9	0	0	142.2	0.861
14381	4323	Sisma X SLD	20.6	0	0	0	142.2	0.861	14382	4323	Sisma Y SLD	0	20.6	0	0	142.2	0.861
14383	4324	Sisma X SLV	33.3	0	0	0	2.3E2	0.861	14384	4324	Sisma Y SLV	0	33.3	0	0	2.3E2	0.861
14385	4324	Sisma X SLD	32.7	0	0	0	2.3E2	0.861	14386	4324	Sisma Y SLD	0	32.7	0	0	2.3E2	0.861
14387	4325	Sisma X SLV	33.7	0	0	0	2.3E2	0.861	14388	4325	Sisma Y SLV	0	33.7	0	0	2.3E2	0.861
14389	4325	Sisma X SLD	33.1	0	0	0	2.3E2	0.861	14390	4325	Sisma Y SLD	0	33.1	0	0	2.3E2	0.861
14391	4326	Sisma X SLV	32.7	0	0	0	2.2E2	0.861	14392	4326	Sisma Y SLV	0	32.7	0	0	2.2E2	0.861
14393	4326	Sisma X SLD	32.2	0	0	0	2.2E2	0.861	14394	4326	Sisma Y SLD	0	32.2	0	0	2.2E2	0.861
14395	4327	Sisma X SLV	34.1	0	0	0	232	0.861	14396	4327	Sisma Y SLV	0	34.1	0	0	232	0.861
14397	4327	Sisma X SLD	33.5	0	0	0	232	0.861	14398	4327	Sisma Y SLD	0	33.5	0	0	232	0.861
14399	4328	Sisma X SLV	33.1	0	0	0	2.3E2	0.861	14400	4328	Sisma Y SLV	0	33.1	0	0	2.3E2	0.861
14401	4328	Sisma X SLD	32.6	0	0	0	2.3E2	0.861	14402	4328	Sisma Y SLD	0	32.6	0	0	2.3E2	0.861
14403	4329	Sisma X SLV	33.1	0	0	0	2.3E2	0.861	14404	4329	Sisma Y SLV	0	33.1	0	0	2.3E2	0.861
14405	4329	Sisma X SLD	32.6	0	0	0	2.3E2	0.861	14406	4329	Sisma Y SLD	0	32.6	0	0	2.3E2	0.861
14407	4330	Sisma X SLV	32.9	0	0	0	224.22	0.861	14408	4330	Sisma Y SLV	0	32.9	0	0	224.22	0.861
14409	4330	Sisma X SLD	32.4	0	0	0	224.22	0.861	14410	4330	Sisma Y SLD	0	32.4	0	0	224.22	0.861
14411	4331	Sisma X SLV	33.4	0	0	0	2.3E2	0.861	14412	4331	Sisma Y SLV	0	33.4	0	0	2.3E2	0.861
14413	4331	Sisma X SLD	32.9	0	0	0	2.3E2	0.861	14414	4331	Sisma Y SLD	0	32.9	0	0	2.3E2	0.861
14415	4332	Sisma X SLV	33.6	0	0	0	2.3E2	0.861	14416	4332	Sisma Y SLV	0	33.6	0	0	2.3E2	0.861
14417	4332	Sisma X SLD	33	0	0	0	2.3E2	0.861	14418	4332	Sisma Y SLD	0	33	0	0	2.3E2	0.861
14419	4333	Sisma X SLV	33.6	0	0	0	2.3E2	0.861	14420	4333	Sisma Y SLV	0	33.6	0	0	2.3E2	0.861
14421	4333	Sisma X SLD	33	0	0	0	2.3E2	0.861	14422	4333	Sisma Y SLD	0	33	0	0	2.3E2	0.861
14423	4334	Sisma X SLV	33.3	0	0	0	2.3E2	0.861	14424	4334	Sisma Y SLV	0	33.3	0	0	2.3E2	0.861
14425	4334	Sisma X SLD	32.8	0	0	0	2.3E2	0.861	14426	4334	Sisma Y SLD	0	32.8	0	0	2.3E2	0.861
14427	4335	Sisma X SLV	33.1	0	0	0	2.3E2	0.861	14428	4335	Sisma Y SLV	0	33.1	0	0	2.3E2	0.861
14429	4335	Sisma X SLD	32.5	0	0	0	2.3E2	0.861	14430	4335	Sisma Y SLD	0	32.5	0	0	2.3E2	0.861
14431	4336	Sisma X SLV	33.2	0	0	0	2.3E2	0.861	14432	4336	Sisma Y SLV	0	33.2	0	0	2.3E2	0.861
14433	4336	Sisma X SLD	32.7	0	0	0	2.3E2	0.861	14434	4336	Sisma Y SLD	0	32.7	0	0	2.3E2	0.861
14435	4337	Sisma X SLV	20.9	0	0	0	1.4E2	0.861	14436	4337	Sisma Y SLV	0	20.9	0	0	1.4E2	0.861
14437	4337	Sisma X SLD	20.6	0	0	0	1.4E2	0.861	14438	4337	Sisma Y SLD	0	20.6	0	0	1.4E2	0.861
14439	4338	Sisma X SLV	34.7	0	0	0	236.22	0.861	14440	4338	Sisma Y SLV	0	34.7	0	0	236.22	0.861
14441	4338	Sisma X SLD	34.2	0	0	0	236.22	0.861	14442	4338	Sisma Y SLD	0	34.2	0	0	236.22	0.861
14443	4339	Sisma X SLV	35.6	0	0	0	2.4E2	0.861	14444	4339	Sisma Y SLV	0	35.6	0	0	2.4E2	0.861
14445	4339	Sisma X SLD	35	0	0	0	2.4E2	0.861	14446	4339	Sisma Y SLD	0	35	0	0	2.4E2	0.861

Indice	Nodo	Condizione	Fx	Fy	Fz	Mz	Peso	Gamma	Indice	Nodo	Condizione	Fx	Fy	Fz	Mz	Peso	Gamma
14447	4340	Sisma X SLV	35.6	0	0	0	2.4E2	0.861	14448	4340	Sisma Y SLV	0	35.6	0	0	2.4E2	0.861
14449	4340	Sisma X SLD	35	0	0	0	2.4E2	0.861	14450	4340	Sisma Y SLD	0	35	0	0	2.4E2	0.861
14451	4341	Sisma X SLV	32.9	0	0	0	2.2E2	0.861	14452	4341	Sisma Y SLV	0	32.9	0	0	2.2E2	0.861
14453	4341	Sisma X SLD	32.4	0	0	0	2.2E2	0.861	14454	4341	Sisma Y SLD	0	32.4	0	0	2.2E2	0.861
14455	4342	Sisma X SLV	32.5	0	0	0	2.2E2	0.861	14456	4342	Sisma Y SLV	0	32.5	0	0	2.2E2	0.861
14457	4342	Sisma X SLD	32	0	0	0	2.2E2	0.861	14458	4342	Sisma Y SLD	0	32	0	0	2.2E2	0.861
14459	4343	Sisma X SLV	20.9	0	0	0	1.4E2	0.861	14460	4343	Sisma Y SLV	0	20.9	0	0	1.4E2	0.861
14461	4343	Sisma X SLD	20.6	0	0	0	1.4E2	0.861	14462	4343	Sisma Y SLD	0	20.6	0	0	1.4E2	0.861
14463	4344	Sisma X SLV	32.5	0	0	0	2.2E2	0.861	14464	4344	Sisma Y SLV	0	32.5	0	0	2.2E2	0.861
14465	4344	Sisma X SLD	32	0	0	0	2.2E2	0.861	14466	4344	Sisma Y SLD	0	32	0	0	2.2E2	0.861
14467	4345	Sisma X SLV	32.5	0	0	0	2.2E2	0.861	14468	4345	Sisma Y SLV	0	32.5	0	0	2.2E2	0.861
14469	4345	Sisma X SLD	32	0	0	0	2.2E2	0.861	14470	4345	Sisma Y SLD	0	32	0	0	2.2E2	0.861
14471	4346	Sisma X SLV	32.7	0	0	0	2.2E2	0.861	14472	4346	Sisma Y SLV	0	32.7	0	0	2.2E2	0.861
14473	4346	Sisma X SLD	32.1	0	0	0	2.2E2	0.861	14474	4346	Sisma Y SLD	0	32.1	0	0	2.2E2	0.861
14475	4347	Sisma X SLV	20.9	0	0	0	1.4E2	0.861	14476	4347	Sisma Y SLV	0	20.9	0	0	1.4E2	0.861
14477	4347	Sisma X SLD	20.6	0	0	0	1.4E2	0.861	14478	4347	Sisma Y SLD	0	20.6	0	0	1.4E2	0.861
14479	4348	Sisma X SLV	32.2	0	0	0	2.2E2	0.861	14480	4348	Sisma Y SLV	0	32.2	0	0	2.2E2	0.861
14481	4348	Sisma X SLD	31.7	0	0	0	2.2E2	0.861	14482	4348	Sisma Y SLD	0	31.7	0	0	2.2E2	0.861
14483	4349	Sisma X SLV	33.1	0	0	0	2.3E2	0.861	14484	4349	Sisma Y SLV	0	33.1	0	0	2.3E2	0.861
14485	4349	Sisma X SLD	32.6	0	0	0	2.3E2	0.861	14486	4349	Sisma Y SLD	0	32.6	0	0	2.3E2	0.861
14487	4350	Sisma X SLV	35.1	0	0	0	2.4E2	0.861	14488	4350	Sisma Y SLV	0	35.1	0	0	2.4E2	0.861
14489	4350	Sisma X SLD	34.6	0	0	0	2.4E2	0.861	14490	4350	Sisma Y SLD	0	34.6	0	0	2.4E2	0.861
14491	4351	Sisma X SLV	35.2	0	0	0	2.4E2	0.861	14492	4351	Sisma Y SLV	0	35.2	0	0	2.4E2	0.861
14493	4351	Sisma X SLD	34.6	0	0	0	2.4E2	0.861	14494	4351	Sisma Y SLD	0	34.6	0	0	2.4E2	0.861
14495	4352	Sisma X SLV	34.6	0	0	0	2.4E2	0.861	14496	4352	Sisma Y SLV	0	34.6	0	0	2.4E2	0.861
14497	4352	Sisma X SLD	34	0	0	0	2.4E2	0.861	14498	4352	Sisma Y SLD	0	34	0	0	2.4E2	0.861
14499	4353	Sisma X SLV	20.9	0	0	0	1.4E2	0.861	14500	4353	Sisma Y SLV	0	20.9	0	0	1.4E2	0.861
14501	4353	Sisma X SLD	20.6	0	0	0	1.4E2	0.861	14502	4353	Sisma Y SLD	0	20.6	0	0	1.4E2	0.861
14503	4354	Sisma X SLV	35	0	0	0	2.4E2	0.861	14504	4354	Sisma Y SLV	0	35	0	0	2.4E2	0.861
14505	4354	Sisma X SLD	34.4	0	0	0	2.4E2	0.861	14506	4354	Sisma Y SLD	0	34.4	0	0	2.4E2	0.861
14507	4355	Sisma X SLV	35	0	0	0	2.4E2	0.861	14508	4355	Sisma Y SLV	0	35	0	0	2.4E2	0.861
14509	4355	Sisma X SLD	34.5	0	0	0	2.4E2	0.861	14510	4355	Sisma Y SLD	0	34.5	0	0	2.4E2	0.861
14511	4356	Sisma X SLV	21	0	0	0	1.4E2	0.861	14512	4356	Sisma Y SLV	0	21	0	0	1.4E2	0.861
14513	4356	Sisma X SLD	20.6	0	0	0	1.4E2	0.861	14514	4356	Sisma Y SLD	0	20.6	0	0	1.4E2	0.861
14515	4357	Sisma X SLV	35	0	0	0	2.4E2	0.861	14516	4357	Sisma Y SLV	0	35	0	0	2.4E2	0.861
14517	4357	Sisma X SLD	34.5	0	0	0	2.4E2	0.861	14518	4357	Sisma Y SLD	0	34.5	0	0	2.4E2	0.861
14519	4358	Sisma X SLV	35.1	0	0	0	2.4E2	0.861	14520	4358	Sisma Y SLV	0	35.1	0	0	2.4E2	0.861
14521	4358	Sisma X SLD	34.5	0	0	0	2.4E2	0.861	14522	4358	Sisma Y SLD	0	34.5	0	0	2.4E2	0.861
14523	4359	Sisma X SLV	35.1	0	0	0	2.4E2	0.861	14524	4359	Sisma Y SLV	0	35.1	0	0	2.4E2	0.861
14525	4359	Sisma X SLD	34.5	0	0	0	2.4E2	0.861	14526	4359	Sisma Y SLD	0	34.5	0	0	2.4E2	0.861
14527	4360	Sisma X SLV	35.1	0	0	0	2.4E2	0.861	14528	4360	Sisma Y SLV	0	35.1	0	0	2.4E2	0.861
14529	4360	Sisma X SLD	34.5	0	0	0	2.4E2	0.861	14530	4360	Sisma Y SLD	0	34.5	0	0	2.4E2	0.861
14531	4361	Sisma X SLV	34.5	0	0	0	2.3E2	0.861	14532	4361	Sisma Y SLV	0	34.5	0	0	2.3E2	0.861
14533	4361	Sisma X SLD	33.9	0	0	0	2.3E2	0.861	14534	4361	Sisma Y SLD	0	33.9	0	0	2.3E2	0.861
14535	4362	Sisma X SLV	33.9	0	0	0	2.3E2	0.861	14536	4362	Sisma Y SLV	0	33.9	0	0	2.3E2	0.861
14537	4362	Sisma X SLD	33.4	0	0	0	2.3E2	0.861	14538	4362	Sisma Y SLD	0	33.4	0	0	2.3E2	0.861
14539	4363	Sisma X SLV	35	0	0	0	2.4E2	0.861	14540	4363	Sisma Y SLV	0	35	0	0	2.4E2	0.861
14541	4363	Sisma X SLD	34.5	0	0	0	2.4E2	0.861	14542	4363	Sisma Y SLD	0	34.5	0	0	2.4E2	0.861
14543	4364	Sisma X SLV	35	0	0	0	2.4E2	0.861	14544	4364	Sisma Y SLV	0	35	0	0	2.4E2	0.861
14545	4364	Sisma X SLD	34.5	0	0	0	2.4E2	0.861	14546	4364	Sisma Y SLD	0	34.5	0	0	2.4E2	0.861
14547	4365	Sisma X SLV	32.8	0	0	0	2.2E2	0.861	14548	4365	Sisma Y SLV	0	32.8	0	0	2.2E2	0.861
14549	4365	Sisma X SLD	32.2	0	0	0	2.2E2	0.861	14550	4365	Sisma Y SLD	0	32.2	0	0	2.2E2	0.861
14551	4366	Sisma X SLV	21	0	0	0	1.4E2	0.861	14552	4366	Sisma Y SLV	0	21	0	0	1.4E2	0.861
14553	4366	Sisma X SLD	20.7	0	0	0	1.4E2	0.861	14554	4366	Sisma Y SLD	0	20.7	0	0	1.4E2	0.861
14555	4367	Sisma X SLV	32.9	0	0	0	2.2E2	0.861	14556	4367	Sisma Y SLV	0	32.9	0	0	2.2E2	0.861
14557	4367	Sisma X SLD	32.4	0	0	0	2.2E2	0.861	14558	4367	Sisma Y SLD	0	32.4	0	0	2.2E2	0.861
14559	4368	Sisma X SLV	35	0	0	0	237.94	0.861	14560	4368	Sisma Y SLV	0	35	0	0	237.94	0.861
14561	4368	Sisma X SLD	34.4	0	0	0	237.94	0.861	14562	4368	Sisma Y SLD	0	34.4	0	0	237.94	0.861
14563	4369	Sisma X SLV	35	0	0	0	2.4E2	0.861	14564	4369	Sisma Y SLV	0	35	0	0	2.4E2	0.861
14565	4369	Sisma X SLD	34.4	0	0	0	2.4E2	0.861	14566	4369	Sisma Y SLD	0	34.4	0	0	2.4E2	0.861
14567	4370	Sisma X SLV	32.9	0	0	0	2.2E2	0.861	14568	4370	Sisma Y SLV	0	32.9	0	0	2.2E2	0.861
14569	4370	Sisma X SLD	32.4	0	0	0	2.2E2	0.861	14570	4370	Sisma Y SLD	0	32.4	0	0	2.2E2	0.861
14571	4371	Sisma X SLV	33.1	0	0	0	2.2E2	0.861	14572	4371	Sisma Y SLV	0	33.1	0	0	2.2E2	0.861
14573	4371	Sisma X SLD	32.5	0	0	0	2.2E2	0.861	14574	4371	Sisma Y SLD	0	32.5	0	0	2.2E2	0.861
14575	4372	Sisma X SLV	34.6	0	0	0	2.4E2	0.861	14576	4372	Sisma Y SLV	0	34.6	0	0	2.4E2	0.861
14577	4372	Sisma X SLD	34.1	0	0	0	2.4E2	0.861	14578	4372	Sisma Y SLD	0	34.1	0	0	2.4E2	0.861
14579	4373	Sisma X SLV	21.2	0	0	0	1.4E2	0.861	14580	4373	Sisma Y SLV	0	21.2	0	0	1.4E2	0.861
14581	4373	Sisma X SLD	20.9	0	0	0	1.4E2	0.861	14582	4373	Sisma Y SLD	0	20.9	0	0	1.4E2	0.861
14583	4374	Sisma X SLV	32.8	0	0	0	2.2E2	0.861	14584	4374	Sisma Y SLV	0	32.8	0	0	2.2E2	0.861
14585	4374	Sisma X SLD	32.3	0	0	0	2.2E2	0.861	14586	4374	Sisma Y SLD	0	32.3	0	0	2.2E2	0.861
14587	4375	Sisma X SLV	33.2	0	0	0	2.3E2	0.861	14588	4375	Sisma Y SLV	0	33.2	0	0	2.3E2	0.861
14589	4375	Sisma X SLD	32.7	0	0	0	2.3E2	0.861	14590	4375	Sisma Y SLD	0	32.7	0	0	2.3E2	0.861
14591	4376	Sisma X SLV	33.4	0	0	0	2.3E2	0.861	14592	4376	Sisma Y SLV	0	33.4	0	0	2.3E2	0.861
14593	4376	Sisma X SLD	32.9	0	0	0	2.3E2	0.861	14594	4376	Sisma Y SLD	0	32.9	0	0	2.3E2	0.861
14595	4377	Sisma X SLV	32.7	0	0	0	2.2E2	0.861	14596	4377	Sisma Y SLV	0	32.7	0	0	2.2E2	0.861
14597	4377	Sisma X SLD	32.2	0	0	0	2.2E2	0.861	14598	4377	Sisma Y SLD	0	32.2	0	0	2.2E2	0.861
14599	4378	Sisma X SLV	34.9	0	0	0	2.4E2	0.861	14600	4378	Sisma Y SLV	0	34.9	0	0	2.4E2	0.861
14601	4378	Sisma X SLD	34.4	0	0	0	2.4E2	0.861	14602	4378	Sisma Y SLD	0	34.4	0	0	2.4E2	0.861
14603	4379	Sisma X SLV	35	0	0	0	237.84	0.861	14604	4379	Sisma Y SLV	0	35	0	0	237.84	0.861
14605	4379	Sisma X SLD	34.4	0	0	0	237.84	0.861	14606	4379	Sisma Y SLD	0	34.4	0	0	237.84	0.861
14607	4380	Sisma X SLV	33.4	0	0	0	227.49	0.861	14608	4380	Sisma Y SLV	0	33.4	0	0	227.49	0.861
14609	4380	Sisma X SLD	32.9	0	0	0	227.49	0.861	14610	4380	Sisma Y SLD	0	32.9	0	0	227.49	0.861
14611	4381	Sisma X SLV	33.6	0	0	0	2.3E2	0.861	14612	4381	Sisma Y SLV	0	33.6	0	0	2.3E2	0.861
14613	4381	Sisma X SLD	33	0	0	0	2.3E2	0.861	14614	4381	Sisma Y SLD	0	33	0	0	2.3E2	0.861
14615	4382	Sisma X SLV	33	0	0	0	2.2E2	0.861	14616	4382	Sisma Y SLV	0	33	0	0	2.2E2	0.861
14617	4382	Sisma X SLD	32.4	0	0	0	2.2E2	0.861	14618	4382	Sisma Y SLD	0	32.4	0	0	2.2E2	0.861
14619	4383	Sisma X SLV	21.5	0	0	0	1.5E2	0.861	14620	4383	Sisma Y SLV	0	21.5	0	0	1.5E2	0.861
14621	4383	Sisma X SLD	21.2	0	0	0	1.5E2	0.861	14622	4383	Sisma Y SLD	0	21.2	0	0	1.5E2	0.861
14623	4384	Sisma X SLV	32.7	0	0	0	222.38	0.861	14624	4384	Sisma Y SLV	0	32.7	0	0	222.38	0.861
14625	4384	Sisma X SLD	32.2	0	0	0	222.38	0.861	14626	4384	Sisma Y SLD	0	32.2	0	0	222.38	0.861
14627	4385	Sisma X SLV	35.2	0	0	0	2.4E2	0.861	14628	4385	Sisma Y SLV	0	35.2	0	0	2.4E2	0.861
14629	4385	Sisma X SLD	34.6	0	0	0	2.4E2	0.861	14630	4385	Sisma Y SLD	0	34.6	0	0	2.4E2	0.861
14631	4386	Sisma X SLV	34.9	0	0	0	237.75	0.861	14632	4386	Sisma Y SLV	0	34.9	0	0	237.75	0.861
14633	4386	Sisma X SLD	34.4	0	0	0	237.75	0.861	14634	4386	Sisma Y SLD	0	34.4	0	0	237.75	0.861
14635	4387	Sisma X SLV	35	0	0	0	2.4E2	0.861	14636	4387	Sisma Y SLV	0	35	0	0	2.4E2	0.861
14637	4387	Sisma X SLD	34.4	0	0	0	2.4E2	0.861	14638	4387	Sisma Y SLD	0	34.4	0	0	2.4E2	0.861
14639	4388	Sisma X SLV	33	0	0	0	2.2E2	0.861	14640	4388	Sisma Y SLV	0	33	0	0	2.2E2	0.861
14641	4388	Sisma X SLD	32.4	0	0	0	2.2E2	0.861	14642	4388	Sisma Y SLD	0	32.4	0	0	2.2E2	0.861
14643	4389	Sisma X SLV	22.5	0	0	0	1.5E2	0.861	14644	4389	Sisma Y SLV	0	22.5	0	0	1.5E2	0.861
14645	4389	Sisma X SLD	22.2	0	0	0	1.5E2	0.861	14646	4389	Sisma Y SLD	0	22.2	0	0	1.5E2	0.861
14647	4390	Sisma X SLV	32.7	0	0	0	2.2E2	0.861	14648	4390	Sisma Y SLV	0	32.7	0	0	2.2E2	0.861
14649	4390	Sisma X SLD	32.1	0	0	0	2.2E2	0.861	14650	4390	Sisma Y SLD	0	32.1	0	0	2.2E2	0.861
14651	4391	Sisma X SLV	36	0	0	0	2.4E2	0.861	14652	4391	Sisma Y SLV	0	36	0	0	2.4E2	0.861
14653	4391	Sisma X SLD	35.4	0	0	0	2.4E2	0.861	14654	4391	Sisma Y SLD	0	35.4	0	0	2.4E2	0.861

muratura

Indice	Nodo	Condizione	Fx	Fy	Fz	Mz	Peso	Gamma	Indice	Nodo	Condizione	Fx	Fy	Fz	Mz	Peso	Gamma
14655	4392	Sisma X SLV	32.9	0	0	0	2.2E2	0.861	14656	4392	Sisma Y SLV	0	32.9	0	0	2.2E2	0.861
14657	4392	Sisma X SLD	32.4	0	0	0	2.2E2	0.861	14658	4392	Sisma Y SLD	0	32.4	0	0	2.2E2	0.861
14659	4393	Sisma X SLV	32.8	0	0	0	2.2E2	0.861	14660	4393	Sisma Y SLV	0	32.8	0	0	2.2E2	0.861
14661	4393	Sisma X SLD	32.3	0	0	0	2.2E2	0.861	14662	4393	Sisma Y SLD	0	32.3	0	0	2.2E2	0.861
14663	4394	Sisma X SLV	36.7	0	0	0	2.5E2	0.861	14664	4394	Sisma Y SLV	0	36.7	0	0	2.5E2	0.861
14665	4394	Sisma X SLD	36.1	0	0	0	2.5E2	0.861	14666	4394	Sisma Y SLD	0	36.1	0	0	2.5E2	0.861
14667	4395	Sisma X SLV	33	0	0	0	2.2E2	0.861	14668	4395	Sisma Y SLV	0	33	0	0	2.2E2	0.861
14669	4395	Sisma X SLD	32.5	0	0	0	2.2E2	0.861	14670	4395	Sisma Y SLD	0	32.5	0	0	2.2E2	0.861
14671	4396	Sisma X SLV	35.9	0	0	0	2.4E2	0.861	14672	4396	Sisma Y SLV	0	35.9	0	0	2.4E2	0.861
14673	4396	Sisma X SLD	35.4	0	0	0	2.4E2	0.861	14674	4396	Sisma Y SLD	0	35.4	0	0	2.4E2	0.861
14675	4397	Sisma X SLV	36	0	0	0	2.4E2	0.861	14676	4397	Sisma Y SLV	0	36	0	0	2.4E2	0.861
14677	4397	Sisma X SLD	35.4	0	0	0	2.4E2	0.861	14678	4397	Sisma Y SLD	0	35.4	0	0	2.4E2	0.861
14679	4398	Sisma X SLV	35.9	0	0	0	2.4E2	0.861	14680	4398	Sisma Y SLV	0	35.9	0	0	2.4E2	0.861
14681	4398	Sisma X SLD	35.3	0	0	0	2.4E2	0.861	14682	4398	Sisma Y SLD	0	35.3	0	0	2.4E2	0.861
14683	4399	Sisma X SLV	33.5	0	0	0	2.3E2	0.861	14684	4399	Sisma Y SLV	0	33.5	0	0	2.3E2	0.861
14685	4399	Sisma X SLD	33	0	0	0	2.3E2	0.861	14686	4399	Sisma Y SLD	0	33	0	0	2.3E2	0.861
14687	4400	Sisma X SLV	35.9	0	0	0	2.4E2	0.861	14688	4400	Sisma Y SLV	0	35.9	0	0	2.4E2	0.861
14689	4400	Sisma X SLD	35.3	0	0	0	2.4E2	0.861	14690	4400	Sisma Y SLD	0	35.3	0	0	2.4E2	0.861
14691	4401	Sisma X SLV	37.3	0	0	0	2.5E2	0.861	14692	4401	Sisma Y SLV	0	37.3	0	0	2.5E2	0.861
14693	4401	Sisma X SLD	36.7	0	0	0	2.5E2	0.861	14694	4401	Sisma Y SLD	0	36.7	0	0	2.5E2	0.861
14695	4402	Sisma X SLV	35.8	0	0	0	2.4E2	0.861	14696	4402	Sisma Y SLV	0	35.8	0	0	2.4E2	0.861
14697	4402	Sisma X SLD	35.3	0	0	0	2.4E2	0.861	14698	4402	Sisma Y SLD	0	35.3	0	0	2.4E2	0.861
14699	4403	Sisma X SLV	34.2	0	0	0	2.3E2	0.861	14700	4403	Sisma Y SLV	0	34.2	0	0	2.3E2	0.861
14701	4403	Sisma X SLD	33.6	0	0	0	2.3E2	0.861	14702	4403	Sisma Y SLD	0	33.6	0	0	2.3E2	0.861
14703	4404	Sisma X SLV	35.6	0	0	0	2.4E2	0.861	14704	4404	Sisma Y SLV	0	35.6	0	0	2.4E2	0.861
14705	4404	Sisma X SLD	35	0	0	0	2.4E2	0.861	14706	4404	Sisma Y SLD	0	35	0	0	2.4E2	0.861
14707	4405	Sisma X SLV	34.6	0	0	0	2.4E2	0.861	14708	4405	Sisma Y SLV	0	34.6	0	0	2.4E2	0.861
14709	4405	Sisma X SLD	34	0	0	0	2.4E2	0.861	14710	4405	Sisma Y SLD	0	34	0	0	2.4E2	0.861
14711	4406	Sisma X SLV	35.2	0	0	0	2.4E2	0.861	14712	4406	Sisma Y SLV	0	35.2	0	0	2.4E2	0.861
14713	4406	Sisma X SLD	34.7	0	0	0	2.4E2	0.861	14714	4406	Sisma Y SLD	0	34.7	0	0	2.4E2	0.861
14715	4407	Sisma X SLV	35	0	0	0	2.4E2	0.861	14716	4407	Sisma Y SLV	0	35	0	0	2.4E2	0.861
14717	4407	Sisma X SLD	34.4	0	0	0	2.4E2	0.861	14718	4407	Sisma Y SLD	0	34.4	0	0	2.4E2	0.861
14719	4408	Sisma X SLV	34.9	0	0	0	2.4E2	0.861	14720	4408	Sisma Y SLV	0	34.9	0	0	2.4E2	0.861
14721	4408	Sisma X SLD	34.4	0	0	0	2.4E2	0.861	14722	4408	Sisma Y SLD	0	34.4	0	0	2.4E2	0.861
14723	4409	Sisma X SLV	47.1	0	0	0	3.2E2	0.861	14724	4409	Sisma Y SLV	0	47.1	0	0	3.2E2	0.861
14725	4409	Sisma X SLD	46.4	0	0	0	3.2E2	0.861	14726	4409	Sisma Y SLD	0	46.4	0	0	3.2E2	0.861
14727	4410	Sisma X SLV	34.9	0	0	0	2.4E2	0.861	14728	4410	Sisma Y SLV	0	34.9	0	0	2.4E2	0.861
14729	4410	Sisma X SLD	34.3	0	0	0	2.4E2	0.861	14730	4410	Sisma Y SLD	0	34.3	0	0	2.4E2	0.861
14731	4411	Sisma X SLV	17	0	0	0	115.5	0.861	14732	4411	Sisma Y SLV	0	17	0	0	115.5	0.861
14733	4411	Sisma X SLD	16.7	0	0	0	115.5	0.861	14734	4411	Sisma Y SLD	0	16.7	0	0	115.5	0.861
14735	4412	Sisma X SLV	17	0	0	0	115.5	0.861	14736	4412	Sisma Y SLV	0	17	0	0	115.5	0.861
14737	4412	Sisma X SLD	16.7	0	0	0	115.5	0.861	14738	4412	Sisma Y SLD	0	16.7	0	0	115.5	0.861
14739	4413	Sisma X SLV	45.1	0	0	0	3.1E2	0.861	14740	4413	Sisma Y SLV	0	45.1	0	0	3.1E2	0.861
14741	4413	Sisma X SLD	44.3	0	0	0	3.1E2	0.861	14742	4413	Sisma Y SLD	0	44.3	0	0	3.1E2	0.861
14743	4414	Sisma X SLV	46.9	0	0	0	3.2E2	0.861	14744	4414	Sisma Y SLV	0	46.9	0	0	3.2E2	0.861
14745	4414	Sisma X SLD	46.2	0	0	0	3.2E2	0.861	14746	4414	Sisma Y SLD	0	46.2	0	0	3.2E2	0.861
14747	4415	Sisma X SLV	46.1	0	0	0	3.1E2	0.861	14748	4415	Sisma Y SLV	0	46.1	0	0	3.1E2	0.861
14749	4415	Sisma X SLD	45.3	0	0	0	3.1E2	0.861	14750	4415	Sisma Y SLD	0	45.3	0	0	3.1E2	0.861
14751	4416	Sisma X SLV	21.4	0	0	0	145.31	0.861	14752	4416	Sisma Y SLV	0	21.4	0	0	145.31	0.861
14753	4416	Sisma X SLD	21	0	0	0	145.31	0.861	14754	4416	Sisma Y SLD	0	21	0	0	145.31	0.861
14755	4417	Sisma X SLV	21.4	0	0	0	145.31	0.861	14756	4417	Sisma Y SLV	0	21.4	0	0	145.31	0.861
14757	4417	Sisma X SLD	21	0	0	0	145.31	0.861	14758	4417	Sisma Y SLD	0	21	0	0	145.31	0.861
14759	4418	Sisma X SLV	21.4	0	0	0	145.31	0.861	14760	4418	Sisma Y SLV	0	21.4	0	0	145.31	0.861
14761	4418	Sisma X SLD	21	0	0	0	145.31	0.861	14762	4418	Sisma Y SLD	0	21	0	0	145.31	0.861
14763	4419	Sisma X SLV	21.4	0	0	0	145.31	0.861	14764	4419	Sisma Y SLV	0	21.4	0	0	145.31	0.861
14765	4419	Sisma X SLD	21	0	0	0	145.31	0.861	14766	4419	Sisma Y SLD	0	21	0	0	145.31	0.861
14767	4420	Sisma X SLV	21.4	0	0	0	145.31	0.861	14768	4420	Sisma Y SLV	0	21.4	0	0	145.31	0.861
14769	4420	Sisma X SLD	21	0	0	0	145.31	0.861	14770	4420	Sisma Y SLD	0	21	0	0	145.31	0.861
14771	4421	Sisma X SLV	21.4	0	0	0	1.5E2	0.861	14772	4421	Sisma Y SLV	0	21.4	0	0	1.5E2	0.861
14773	4421	Sisma X SLD	21	0	0	0	1.5E2	0.861	14774	4421	Sisma Y SLD	0	21	0	0	1.5E2	0.861
14775	4422	Sisma X SLV	21.4	0	0	0	1.5E2	0.861	14776	4422	Sisma Y SLV	0	21.4	0	0	1.5E2	0.861
14777	4422	Sisma X SLD	21	0	0	0	1.5E2	0.861	14778	4422	Sisma Y SLD	0	21	0	0	1.5E2	0.861
14779	4423	Sisma X SLV	21.4	0	0	0	145.35	0.861	14780	4423	Sisma Y SLV	0	21.4	0	0	145.35	0.861
14781	4423	Sisma X SLD	21	0	0	0	145.35	0.861	14782	4423	Sisma Y SLD	0	21	0	0	145.35	0.861
14783	4424	Sisma X SLV	21.4	0	0	0	1.5E2	0.861	14784	4424	Sisma Y SLV	0	21.4	0	0	1.5E2	0.861
14785	4424	Sisma X SLD	21	0	0	0	1.5E2	0.861	14786	4424	Sisma Y SLD	0	21	0	0	1.5E2	0.861
14787	4425	Sisma X SLV	21.4	0	0	0	1.5E2	0.861	14788	4425	Sisma Y SLV	0	21.4	0	0	1.5E2	0.861
14789	4425	Sisma X SLD	21.1	0	0	0	1.5E2	0.861	14790	4425	Sisma Y SLD	0	21.1	0	0	1.5E2	0.861
14791	4426	Sisma X SLV	21.6	0	0	0	1.5E2	0.861	14792	4426	Sisma Y SLV	0	21.6	0	0	1.5E2	0.861
14793	4426	Sisma X SLD	21.2	0	0	0	1.5E2	0.861	14794	4426	Sisma Y SLD	0	21.2	0	0	1.5E2	0.861
14795	4427	Sisma X SLV	21.9	0	0	0	149	0.861	14796	4427	Sisma Y SLV	0	21.9	0	0	149	0.861
14797	4427	Sisma X SLD	21.6	0	0	0	149	0.861	14798	4427	Sisma Y SLD	0	21.6	0	0	149	0.861
14799	4428	Sisma X SLV	23.1	0	0	0	1.6E2	0.861	14800	4428	Sisma Y SLV	0	23.1	0	0	1.6E2	0.861
14801	4428	Sisma X SLD	22.7	0	0	0	1.6E2	0.861	14802	4428	Sisma Y SLD	0	22.7	0	0	1.6E2	0.861
14803	4429	Sisma X SLV	48.3	0	0	0	3.3E2	0.861	14804	4429	Sisma Y SLV	0	48.3	0	0	3.3E2	0.861
14805	4429	Sisma X SLD	47.5	0	0	0	3.3E2	0.861	14806	4429	Sisma Y SLD	0	47.5	0	0	3.3E2	0.861
14807	4430	Sisma X SLV	60.7	0	0	0	4.1E2	0.861	14808	4430	Sisma Y SLV	0	60.7	0	0	4.1E2	0.861
14809	4430	Sisma X SLD	59.7	0	0	0	4.1E2	0.861	14810	4430	Sisma Y SLD	0	59.7	0	0	4.1E2	0.861
14811	4431	Sisma X SLV	25.5	0	0	0	173.25	0.861	14812	4431	Sisma Y SLV	0	25.5	0	0	173.25	0.861
14813	4431	Sisma X SLD	25.1	0	0	0	173.25	0.861	14814	4431	Sisma Y SLD	0	25.1	0	0	173.25	0.861
14815	4432	Sisma X SLV	34	0	0	0	2.3E2	0.861	14816	4432	Sisma Y SLV	0	34	0	0	2.3E2	0.861
14817	4432	Sisma X SLD	33.5	0	0	0	2.3E2	0.861	14818	4432	Sisma Y SLD	0	33.5	0	0	2.3E2	0.861
14819	4433	Sisma X SLV	23.2	0	0	0	1.6E2	0.862	14820	4433	Sisma Y SLV	0	23.2	0	0	1.6E2	0.862
14821	4433	Sisma X SLD	22.8	0	0	0	1.6E2	0.862	14822	4433	Sisma Y SLD	0	22.8	0	0	1.6E2	0.862
14823	4434	Sisma X SLV	34.2	0	0	0	2.3E2	0.862	14824	4434	Sisma Y SLV	0	34.2	0	0	2.3E2	0.862
14825	4434	Sisma X SLD	33.6	0	0	0	2.3E2	0.862	14826	4434	Sisma Y SLD	0	33.6	0	0	2.3E2	0.862
14827	4435	Sisma X SLV	23.3	0	0	0	1.6E2	0.862	14828	4435	Sisma Y SLV	0	23.3	0	0	1.6E2	0.862
14829	4435	Sisma X SLD	23	0	0	0	1.6E2	0.862	14830	4435	Sisma Y SLD	0	23	0	0	1.6E2	0.862
14831	4436	Sisma X SLV	34.4	0	0	0	2.3E2	0.862	14832	4436	Sisma Y SLV	0	34.4	0	0	2.3E2	0.862
14833	4436	Sisma X SLD	33.8	0	0	0	2.3E2	0.862	14834	4436	Sisma Y SLD	0	33.8	0	0	2.3E2	0.862
14835	4437	Sisma X SLV	22.1	0	0	0	1.5E2	0.862	14836	4437	Sisma Y SLV	0	22.1	0	0	1.5E2	0.862
14837	4437	Sisma X SLD	21.8	0	0	0	1.5E2	0.862	14838	4437	Sisma Y SLD	0	21.8	0	0	1.5E2	0.862
14839	4438	Sisma X SLV	23.5	0	0	0	1.6E2	0.862	14840	4438	Sisma Y SLV	0	23.5	0	0	1.6E2	0.862
14841	4438	Sisma X SLD	23.1	0	0	0	1.6E2	0.862	14842	4438	Sisma Y SLD	0	23.1	0	0	1.6E2	0.862
14843	4439	Sisma X SLV	35.9	0	0	0	2.4E2	0.862	14844	4439	Sisma Y SLV	0	35.9	0	0	2.4E2	0.862
14845	4439	Sisma X SLD	35.3	0	0	0	2.4E2	0.862	14846	4439	Sisma Y SLD	0	35.3	0	0	2.4E2	0.862
14847	4440	Sisma X SLV	35.9	0	0	0	2.4E2	0.862	14848	4440	Sisma Y SLV	0	35.9	0	0	2.4E2	0.862
14849	4440	Sisma X SLD	35.3	0	0	0	2.4E2	0.862	14850	4440	Sisma Y SLD	0	35.3	0	0	2.4E2	0.862
14851	4441	Sisma X SLV	37.4	0	0	0	2.5E2	0.863	14852	4441	Sisma Y SLV	0	37.4	0	0	2.5E2	0.863
14853	4441	Sisma X SLD	36.8	0	0	0	2.5E2	0.863	14854	4441	Sisma Y SLD	0	36.8	0	0	2.5E2	0.863
14855	4442	Sisma X SLV	37.4	0	0	0	2.5E2	0.863	14856	4442	Sisma Y SLV	0	37.4	0	0	2.5E2	0.863

Indice	Nodo	Condizione	Fx	Fy	Fz	Mz	Peso	Gamma	Indice	Nodo	Condizione	Fx	Fy	Fz	Mz	Peso	Gamma
14857	4442	Sisma X SLD	36.8	0	0	0	2.5E2	0.863	14858	4442	Sisma Y SLD	0	36.8	0	0	2.5E2	0.863
14859	4443	Sisma X SLV	23.7	0	0	0	1.6E2	0.863	14860	4443	Sisma Y SLV	0	23.7	0	0	1.6E2	0.863
14861	4443	Sisma X SLD	23.3	0	0	0	1.6E2	0.863	14862	4443	Sisma Y SLD	0	23.3	0	0	1.6E2	0.863
14863	4444	Sisma X SLV	20.1	0	0	0	1.4E2	0.863	14864	4444	Sisma Y SLV	0	20.1	0	0	1.4E2	0.863
14865	4444	Sisma X SLD	19.8	0	0	0	1.4E2	0.863	14866	4444	Sisma Y SLD	0	19.8	0	0	1.4E2	0.863
14867	4445	Sisma X SLV	24.6	0	0	0	1.7E2	0.863	14868	4445	Sisma Y SLV	0	24.6	0	0	1.7E2	0.863
14869	4445	Sisma X SLD	24.2	0	0	0	1.7E2	0.863	14870	4445	Sisma Y SLD	0	24.2	0	0	1.7E2	0.863
14871	4446	Sisma X SLV	34.8	0	0	0	2.4E2	0.863	14872	4446	Sisma Y SLV	0	34.8	0	0	2.4E2	0.863
14873	4446	Sisma X SLD	34.3	0	0	0	2.4E2	0.863	14874	4446	Sisma Y SLD	0	34.3	0	0	2.4E2	0.863
14875	4447	Sisma X SLV	24	0	0	0	1.6E2	0.863	14876	4447	Sisma Y SLV	0	24	0	0	1.6E2	0.863
14877	4447	Sisma X SLD	23.6	0	0	0	1.6E2	0.863	14878	4447	Sisma Y SLD	0	23.6	0	0	1.6E2	0.863
14879	4448	Sisma X SLV	22.5	0	0	0	1.5E2	0.863	14880	4448	Sisma Y SLV	0	22.5	0	0	1.5E2	0.863
14881	4448	Sisma X SLD	22.2	0	0	0	1.5E2	0.863	14882	4448	Sisma Y SLD	0	22.2	0	0	1.5E2	0.863
14883	4449	Sisma X SLV	36.8	0	0	0	2.5E2	0.864	14884	4449	Sisma Y SLV	0	36.8	0	0	2.5E2	0.864
14885	4449	Sisma X SLD	36.2	0	0	0	2.5E2	0.864	14886	4449	Sisma Y SLD	0	36.2	0	0	2.5E2	0.864
14887	4450	Sisma X SLV	36.8	0	0	0	2.5E2	0.864	14888	4450	Sisma Y SLV	0	36.8	0	0	2.5E2	0.864
14889	4450	Sisma X SLD	36.2	0	0	0	2.5E2	0.864	14890	4450	Sisma Y SLD	0	36.2	0	0	2.5E2	0.864
14891	4451	Sisma X SLV	24.3	0	0	0	1.6E2	0.864	14892	4451	Sisma Y SLV	0	24.3	0	0	1.6E2	0.864
14893	4451	Sisma X SLD	23.9	0	0	0	1.6E2	0.864	14894	4451	Sisma Y SLD	0	23.9	0	0	1.6E2	0.864
14895	4452	Sisma X SLV	35.5	0	0	0	2.4E2	0.864	14896	4452	Sisma Y SLV	0	35.5	0	0	2.4E2	0.864
14897	4452	Sisma X SLD	34.9	0	0	0	2.4E2	0.864	14898	4452	Sisma Y SLD	0	34.9	0	0	2.4E2	0.864
14899	4453	Sisma X SLV	38.2	0	0	0	2.6E2	0.864	14900	4453	Sisma Y SLV	0	38.2	0	0	2.6E2	0.864
14901	4453	Sisma X SLD	37.6	0	0	0	2.6E2	0.864	14902	4453	Sisma Y SLD	0	37.6	0	0	2.6E2	0.864
14903	4454	Sisma X SLV	38.2	0	0	0	2.6E2	0.864	14904	4454	Sisma Y SLV	0	38.2	0	0	2.6E2	0.864
14905	4454	Sisma X SLD	37.6	0	0	0	2.6E2	0.864	14906	4454	Sisma Y SLD	0	37.6	0	0	2.6E2	0.864
14907	4455	Sisma X SLV	19.2	0	0	0	1.3E2	0.864	14908	4455	Sisma Y SLV	0	19.2	0	0	1.3E2	0.864
14909	4455	Sisma X SLD	18.9	0	0	0	1.3E2	0.864	14910	4455	Sisma Y SLD	0	18.9	0	0	1.3E2	0.864
14911	4456	Sisma X SLV	31.7	0	0	0	2.1E2	0.864	14912	4456	Sisma Y SLV	0	31.7	0	0	2.1E2	0.864
14913	4456	Sisma X SLD	31.2	0	0	0	2.1E2	0.864	14914	4456	Sisma Y SLD	0	31.2	0	0	2.1E2	0.864
14915	4457	Sisma X SLV	31.7	0	0	0	2.1E2	0.864	14916	4457	Sisma Y SLV	0	31.7	0	0	2.1E2	0.864
14917	4457	Sisma X SLD	31.2	0	0	0	2.1E2	0.864	14918	4457	Sisma Y SLD	0	31.2	0	0	2.1E2	0.864
14919	4458	Sisma X SLV	23	0	0	0	1.6E2	0.865	14920	4458	Sisma Y SLV	0	23	0	0	1.6E2	0.865
14921	4458	Sisma X SLD	22.6	0	0	0	1.6E2	0.865	14922	4458	Sisma Y SLD	0	22.6	0	0	1.6E2	0.865
14923	4459	Sisma X SLV	25.4	0	0	0	1.7E2	0.865	14924	4459	Sisma Y SLV	0	25.4	0	0	1.7E2	0.865
14925	4459	Sisma X SLD	25	0	0	0	1.7E2	0.865	14926	4459	Sisma Y SLD	0	25	0	0	1.7E2	0.865
14927	4460	Sisma X SLV	24.6	0	0	0	1.7E2	0.865	14928	4460	Sisma Y SLV	0	24.6	0	0	1.7E2	0.865
14929	4460	Sisma X SLD	24.2	0	0	0	1.7E2	0.865	14930	4460	Sisma Y SLD	0	24.2	0	0	1.7E2	0.865
14931	4461	Sisma X SLV	36.7	0	0	0	2.5E2	0.865	14932	4461	Sisma Y SLV	0	36.7	0	0	2.5E2	0.865
14933	4461	Sisma X SLD	36.1	0	0	0	2.5E2	0.865	14934	4461	Sisma Y SLD	0	36.1	0	0	2.5E2	0.865
14935	4462	Sisma X SLV	37.7	0	0	0	2.6E2	0.865	14936	4462	Sisma Y SLV	0	37.7	0	0	2.6E2	0.865
14937	4462	Sisma X SLD	37.1	0	0	0	2.6E2	0.865	14938	4462	Sisma Y SLD	0	37.1	0	0	2.6E2	0.865
14939	4463	Sisma X SLV	37.7	0	0	0	2.6E2	0.865	14940	4463	Sisma Y SLV	0	37.7	0	0	2.6E2	0.865
14941	4463	Sisma X SLD	37.1	0	0	0	2.6E2	0.865	14942	4463	Sisma Y SLD	0	37.1	0	0	2.6E2	0.865
14943	4464	Sisma X SLV	36.3	0	0	0	2.5E2	0.866	14944	4464	Sisma Y SLV	0	36.3	0	0	2.5E2	0.866
14945	4464	Sisma X SLD	35.7	0	0	0	2.5E2	0.866	14946	4464	Sisma Y SLD	0	35.7	0	0	2.5E2	0.866
14947	4465	Sisma X SLV	39.2	0	0	0	2.7E2	0.866	14948	4465	Sisma Y SLV	0	39.2	0	0	2.7E2	0.866
14949	4465	Sisma X SLD	38.5	0	0	0	2.7E2	0.866	14950	4465	Sisma Y SLD	0	38.5	0	0	2.7E2	0.866
14951	4466	Sisma X SLV	39.2	0	0	0	2.7E2	0.866	14952	4466	Sisma Y SLV	0	39.2	0	0	2.7E2	0.866
14953	4466	Sisma X SLD	38.5	0	0	0	2.7E2	0.866	14954	4466	Sisma Y SLD	0	38.5	0	0	2.7E2	0.866
14955	4467	Sisma X SLV	9.7	0	0	0	65.626	0.866	14956	4467	Sisma Y SLV	0	9.7	0	0	65.626	0.866
14957	4467	Sisma X SLD	9.5	0	0	0	65.626	0.866	14958	4467	Sisma Y SLD	0	9.5	0	0	65.626	0.866
14959	4468	Sisma X SLV	12.5	0	0	0	84.365	0.866	14960	4468	Sisma Y SLV	0	12.5	0	0	84.365	0.866
14961	4468	Sisma X SLD	12.3	0	0	0	84.365	0.866	14962	4468	Sisma Y SLD	0	12.3	0	0	84.365	0.866
14963	4469	Sisma X SLV	45.4	0	0	0	3.1E2	0.866	14964	4469	Sisma Y SLV	0	45.4	0	0	3.1E2	0.866
14965	4469	Sisma X SLD	44.7	0	0	0	3.1E2	0.866	14966	4469	Sisma Y SLD	0	44.7	0	0	3.1E2	0.866
14967	4470	Sisma X SLV	38.8	0	0	0	262.76	0.866	14968	4470	Sisma Y SLV	0	38.8	0	0	262.76	0.866
14969	4470	Sisma X SLD	38.2	0	0	0	262.76	0.866	14970	4470	Sisma Y SLD	0	38.2	0	0	262.76	0.866
14971	4471	Sisma X SLV	23.4	0	0	0	1.6E2	0.866	14972	4471	Sisma Y SLV	0	23.4	0	0	1.6E2	0.866
14973	4471	Sisma X SLD	23.1	0	0	0	1.6E2	0.866	14974	4471	Sisma Y SLD	0	23.1	0	0	1.6E2	0.866
14975	4472	Sisma X SLV	38.9	0	0	0	2.6E2	0.866	14976	4472	Sisma Y SLV	0	38.9	0	0	2.6E2	0.866
14977	4472	Sisma X SLD	38.3	0	0	0	2.6E2	0.866	14978	4472	Sisma Y SLD	0	38.3	0	0	2.6E2	0.866
14979	4473	Sisma X SLV	26.1	0	0	0	1.8E2	0.867	14980	4473	Sisma Y SLV	0	26.1	0	0	1.8E2	0.867
14981	4473	Sisma X SLD	25.7	0	0	0	1.8E2	0.867	14982	4473	Sisma Y SLD	0	25.7	0	0	1.8E2	0.867
14983	4474	Sisma X SLV	37.1	0	0	0	2.5E2	0.867	14984	4474	Sisma Y SLV	0	37.1	0	0	2.5E2	0.867
14985	4474	Sisma X SLD	36.5	0	0	0	2.5E2	0.867	14986	4474	Sisma Y SLD	0	36.5	0	0	2.5E2	0.867
14987	4475	Sisma X SLV	38.7	0	0	0	2.6E2	0.867	14988	4475	Sisma Y SLV	0	38.7	0	0	2.6E2	0.867
14989	4475	Sisma X SLD	38.1	0	0	0	2.6E2	0.867	14990	4475	Sisma Y SLD	0	38.1	0	0	2.6E2	0.867
14991	4476	Sisma X SLV	38.7	0	0	0	2.6E2	0.867	14992	4476	Sisma Y SLV	0	38.7	0	0	2.6E2	0.867
14993	4476	Sisma X SLD	38.1	0	0	0	2.6E2	0.867	14994	4476	Sisma Y SLD	0	38.1	0	0	2.6E2	0.867
14995	4477	Sisma X SLV	36.5	0	0	0	2.5E2	0.867	14996	4477	Sisma Y SLV	0	36.5	0	0	2.5E2	0.867
14997	4477	Sisma X SLD	35.9	0	0	0	2.5E2	0.867	14998	4477	Sisma Y SLD	0	35.9	0	0	2.5E2	0.867
14999	4478	Sisma X SLV	37.2	0	0	0	2.5E2	0.867	15000	4478	Sisma Y SLV	0	37.2	0	0	2.5E2	0.867
15001	4478	Sisma X SLD	36.6	0	0	0	2.5E2	0.867	15002	4478	Sisma Y SLD	0	36.6	0	0	2.5E2	0.867
15003	4479	Sisma X SLV	40.2	0	0	0	2.7E2	0.867	15004	4479	Sisma Y SLV	0	40.2	0	0	2.7E2	0.867
15005	4479	Sisma X SLD	39.5	0	0	0	2.7E2	0.867	15006	4479	Sisma Y SLD	0	39.5	0	0	2.7E2	0.867
15007	4480	Sisma X SLV	40.2	0	0	0	2.7E2	0.867	15008	4480	Sisma Y SLV	0	40.2	0	0	2.7E2	0.867
15009	4480	Sisma X SLD	39.5	0	0	0	2.7E2	0.867	15010	4480	Sisma Y SLD	0	39.5	0	0	2.7E2	0.867
15011	4481	Sisma X SLV	31.9	0	0	0	2.2E2	0.868	15012	4481	Sisma Y SLV	0	31.9	0	0	2.2E2	0.868
15013	4481	Sisma X SLD	31.4	0	0	0	2.2E2	0.868	15014	4481	Sisma Y SLD	0	31.4	0	0	2.2E2	0.868
15015	4482	Sisma X SLV	31.9	0	0	0	2.2E2	0.868	15016	4482	Sisma Y SLV	0	31.9	0	0	2.2E2	0.868
15017	4482	Sisma X SLD	31.4	0	0	0	2.2E2	0.868	15018	4482	Sisma Y SLD	0	31.4	0	0	2.2E2	0.868
15019	4483	Sisma X SLV	24	0	0	0	1.6E2	0.868	15020	4483	Sisma Y SLV	0	24	0	0	1.6E2	0.868
15021	4483	Sisma X SLD	23.6	0	0	0	1.6E2	0.868	15022	4483	Sisma Y SLD	0	23.6	0	0	1.6E2	0.868
15023	4484	Sisma X SLV	31.2	0	0	0	2.1E2	0.868	15024	4484	Sisma Y SLV	0	31.2	0	0	2.1E2	0.868
15025	4484	Sisma X SLD	30.7	0	0	0	2.1E2	0.868	15026	4484	Sisma Y SLD	0	30.7	0	0	2.1E2	0.868
15027	4485	Sisma X SLV	31.2	0	0	0	2.1E2	0.868	15028	4485	Sisma Y SLV	0	31.2	0	0	2.1E2	0.868
15029	4485	Sisma X SLD	30.7	0	0	0	2.1E2	0.868	15030	4485	Sisma Y SLD	0	30.7	0	0	2.1E2	0.868
15031	4486	Sisma X SLV	37.2	0	0	0	2.5E2	0.868	15032	4486	Sisma Y SLV	0	37.2	0	0	2.5E2	0.868
15033	4486	Sisma X SLD	36.6	0	0	0	2.5E2	0.868	15034	4486	Sisma Y SLD	0	36.6	0	0	2.5E2	0.868
15035	4487	Sisma X SLV	27	0	0	0	1.8E2	0.869	15036	4487	Sisma Y SLV	0	27	0	0	1.8E2	0.869
15037	4487	Sisma X SLD	26.5	0	0	0	1.8E2	0.869	15038	4487	Sisma Y SLD	0	26.5	0	0	1.8E2	0.869
15039	4488	Sisma X SLV	34.9	0	0	0	2.4E2	0.869	15040	4488	Sisma Y SLV	0	34.9	0	0	2.4E2	0.869
15041	4488	Sisma X SLD	34.3	0	0	0	2.4E2	0.869	15042	4488	Sisma Y SLD	0	34.3	0	0	2.4E2	0.869
15043	4489	Sisma X SLV	34.9	0	0	0	2.4E2	0.869	15044	4489	Sisma Y SLV	0	34.9	0	0	2.4E2	0.869
15045	4489	Sisma X SLD	34.3	0	0	0	2.4E2	0.869	15046	4489	Sisma Y SLD	0	34.3	0	0	2.4E2	0.869
15047	4490	Sisma X SLV	39.7	0	0	0	2.7E2	0.869	15048	4490	Sisma Y SLV	0	39.7	0	0	2.7E2	0.869
15049	4490	Sisma X SLD	39.1	0	0	0	2.7E2	0.869	15050	4490	Sisma Y SLD	0	39.1	0	0	2.7E2	0.869
15051	4491	Sisma X SLV	39.7	0	0	0	2.7E2	0.869	15052	4491	Sisma Y SLV	0	39.7	0	0	2.7E2	0.869
15053	4491	Sisma X SLD	39.1	0	0	0	2.7E2	0.869	15054	4491	Sisma Y SLD	0	39.1	0	0	2.7E2	0.869
15055	4492	Sisma X SLV	38.2	0	0	0	2.6E2	0.869	15056	4492	Sisma Y SLV	0	38.2	0	0	2.6E2	0.869
15057	4492	Sisma X SLD	37.6	0	0	0	2.6E2	0.869	15058	4492	Sisma Y SLD	0	37.6	0	0	2.6E2	0.869
15059	4493	Sisma X SLV	41.2	0	0	0	2.8E2	0.869	15060	4493	Sisma Y SLV	0	41.2	0	0	2.8E2	0.869
15061	4493	Sisma X SLD	40.6	0	0	0	2.8E2	0.869	15062	4493	Sisma Y SLD	0	40.6	0	0	2.8E2	0.869
15063	4494	Sisma X SLV	41.2	0	0	0	2.8E2	0.869	15064	4494	Sisma Y SLV	0	41.2	0	0	2.8E2	0.869

muratura

Indice	Nodo	Condizione	Fx	Fy	Fz	Mz	Peso	Gamma	Indice	Nodo	Condizione	Fx	Fy	Fz	Mz	Peso	Gamma
15065	4494	Sisma X SLD	40.6	0	0	0	2.8E2	0.869	15066	4494	Sisma Y SLD	0	40.6	0	0	2.8E2	0.869
15067	4495	Sisma X SLV	37.1	0	0	0	250.3	0.869	15068	4495	Sisma Y SLV	0	37.1	0	0	250.3	0.869
15069	4495	Sisma X SLD	36.5	0	0	0	250.3	0.869	15070	4495	Sisma Y SLD	0	36.5	0	0	250.3	0.869
15071	4496	Sisma X SLV	24.5	0	0	0	1.7E2	0.869	15072	4496	Sisma Y SLV	0	24.5	0	0	1.7E2	0.869
15073	4496	Sisma X SLD	24.1	0	0	0	1.7E2	0.869	15074	4496	Sisma Y SLD	0	24.1	0	0	1.7E2	0.869
15075	4497	Sisma X SLV	36.8	0	0	0	2.5E2	0.87	15076	4497	Sisma Y SLV	0	36.8	0	0	2.5E2	0.87
15077	4497	Sisma X SLD	36.2	0	0	0	2.5E2	0.87	15078	4497	Sisma Y SLD	0	36.2	0	0	2.5E2	0.87
15079	4498	Sisma X SLV	39.3	0	0	0	264.55	0.871	15080	4498	Sisma Y SLV	0	39.3	0	0	264.55	0.871
15081	4498	Sisma X SLD	38.7	0	0	0	264.55	0.871	15082	4498	Sisma Y SLD	0	38.7	0	0	264.55	0.871
15083	4499	Sisma X SLV	39.3	0	0	0	264.55	0.871	15084	4499	Sisma Y SLV	0	39.3	0	0	264.55	0.871
15085	4499	Sisma X SLD	38.7	0	0	0	264.55	0.871	15086	4499	Sisma Y SLD	0	38.7	0	0	264.55	0.871
15087	4500	Sisma X SLV	23.9	0	0	0	1.6E2	0.871	15088	4500	Sisma Y SLV	0	23.9	0	0	1.6E2	0.871
15089	4500	Sisma X SLD	23.5	0	0	0	1.6E2	0.871	15090	4500	Sisma Y SLD	0	23.5	0	0	1.6E2	0.871
15091	4501	Sisma X SLV	19.5	0	0	0	1.3E2	0.871	15092	4501	Sisma Y SLV	0	19.5	0	0	1.3E2	0.871
15093	4501	Sisma X SLD	19.2	0	0	0	1.3E2	0.871	15094	4501	Sisma Y SLD	0	19.2	0	0	1.3E2	0.871
15095	4502	Sisma X SLV	16.4	0	0	0	1.1E2	0.871	15096	4502	Sisma Y SLV	0	16.4	0	0	1.1E2	0.871
15097	4502	Sisma X SLD	16.1	0	0	0	1.1E2	0.871	15098	4502	Sisma Y SLD	0	16.1	0	0	1.1E2	0.871
15099	4503	Sisma X SLV	16.4	0	0	0	1.1E2	0.871	15100	4503	Sisma Y SLV	0	16.4	0	0	1.1E2	0.871
15101	4503	Sisma X SLD	16.1	0	0	0	1.1E2	0.871	15102	4503	Sisma Y SLD	0	16.1	0	0	1.1E2	0.871
15103	4504	Sisma X SLV	20.3	0	0	0	1.4E2	0.871	15104	4504	Sisma Y SLV	0	20.3	0	0	1.4E2	0.871
15105	4504	Sisma X SLD	19.9	0	0	0	1.4E2	0.871	15106	4504	Sisma Y SLD	0	19.9	0	0	1.4E2	0.871
15107	4505	Sisma X SLV	20.3	0	0	0	1.4E2	0.871	15108	4505	Sisma Y SLV	0	20.3	0	0	1.4E2	0.871
15109	4505	Sisma X SLD	19.9	0	0	0	1.4E2	0.871	15110	4505	Sisma Y SLD	0	19.9	0	0	1.4E2	0.871
15111	4506	Sisma X SLV	13.8	0	0	0	92.752	0.871	15112	4506	Sisma Y SLV	0	13.8	0	0	92.752	0.871
15113	4506	Sisma X SLD	13.6	0	0	0	92.752	0.871	15114	4506	Sisma Y SLD	0	13.6	0	0	92.752	0.871
15115	4507	Sisma X SLV	12.5	0	0	0	84.002	0.871	15116	4507	Sisma Y SLV	0	12.5	0	0	84.002	0.871
15117	4507	Sisma X SLD	12.3	0	0	0	84.002	0.871	15118	4507	Sisma Y SLD	0	12.3	0	0	84.002	0.871
15119	4508	Sisma X SLV	19.1	0	0	0	1.3E2	0.871	15120	4508	Sisma Y SLV	0	19.1	0	0	1.3E2	0.871
15121	4508	Sisma X SLD	18.8	0	0	0	1.3E2	0.871	15122	4508	Sisma Y SLD	0	18.8	0	0	1.3E2	0.871
15123	4509	Sisma X SLV	19.1	0	0	0	1.3E2	0.871	15124	4509	Sisma Y SLV	0	19.1	0	0	1.3E2	0.871
15125	4509	Sisma X SLD	18.8	0	0	0	1.3E2	0.871	15126	4509	Sisma Y SLD	0	18.8	0	0	1.3E2	0.871
15127	4510	Sisma X SLV	21	0	0	0	1.4E2	0.871	15128	4510	Sisma Y SLV	0	21	0	0	1.4E2	0.871
15129	4510	Sisma X SLD	20.7	0	0	0	1.4E2	0.871	15130	4510	Sisma Y SLD	0	20.7	0	0	1.4E2	0.871
15131	4511	Sisma X SLV	21	0	0	0	1.4E2	0.871	15132	4511	Sisma Y SLV	0	21	0	0	1.4E2	0.871
15133	4511	Sisma X SLD	20.7	0	0	0	1.4E2	0.871	15134	4511	Sisma Y SLD	0	20.7	0	0	1.4E2	0.871
15135	4512	Sisma X SLV	19.6	0	0	0	1.3E2	0.871	15136	4512	Sisma Y SLV	0	19.6	0	0	1.3E2	0.871
15137	4512	Sisma X SLD	19.3	0	0	0	1.3E2	0.871	15138	4512	Sisma Y SLD	0	19.3	0	0	1.3E2	0.871
15139	4513	Sisma X SLV	19.5	0	0	0	1.3E2	0.871	15140	4513	Sisma Y SLV	0	19.5	0	0	1.3E2	0.871
15141	4513	Sisma X SLD	19.2	0	0	0	1.3E2	0.871	15142	4513	Sisma Y SLD	0	19.2	0	0	1.3E2	0.871
15143	4514	Sisma X SLV	18.5	0	0	0	1.2E2	0.871	15144	4514	Sisma Y SLV	0	18.5	0	0	1.2E2	0.871
15145	4514	Sisma X SLD	18.2	0	0	0	1.2E2	0.871	15146	4514	Sisma Y SLD	0	18.2	0	0	1.2E2	0.871
15147	4515	Sisma X SLV	18.1	0	0	0	1.2E2	0.871	15148	4515	Sisma Y SLV	0	18.1	0	0	1.2E2	0.871
15149	4515	Sisma X SLD	17.8	0	0	0	1.2E2	0.871	15150	4515	Sisma Y SLD	0	17.8	0	0	1.2E2	0.871
15151	4516	Sisma X SLV	22.4	0	0	0	1.5E2	0.871	15152	4516	Sisma Y SLV	0	22.4	0	0	1.5E2	0.871
15153	4516	Sisma X SLD	22	0	0	0	1.5E2	0.871	15154	4516	Sisma Y SLD	0	22	0	0	1.5E2	0.871
15155	4517	Sisma X SLV	44.1	0	0	0	3.0E2	0.871	15156	4517	Sisma Y SLV	0	44.1	0	0	3.0E2	0.871
15157	4517	Sisma X SLD	43.4	0	0	0	3.0E2	0.871	15158	4517	Sisma Y SLD	0	43.4	0	0	3.0E2	0.871
15159	4518	Sisma X SLV	19.8	0	0	0	130.46	0.887	15160	4518	Sisma Y SLV	0	19.8	0	0	130.46	0.887
15161	4518	Sisma X SLD	19.4	0	0	0	130.46	0.887	15162	4518	Sisma Y SLD	0	19.4	0	0	130.46	0.887
15163	4519	Sisma X SLV	19.8	0	0	0	130.46	0.887	15164	4519	Sisma Y SLV	0	19.8	0	0	130.46	0.887
15165	4519	Sisma X SLD	19.4	0	0	0	130.46	0.887	15166	4519	Sisma Y SLD	0	19.4	0	0	130.46	0.887
15167	4520	Sisma X SLV	15.4	0	0	0	1.0E2	0.889	15168	4520	Sisma Y SLV	0	15.4	0	0	1.0E2	0.889
15169	4520	Sisma X SLD	15.2	0	0	0	1.0E2	0.889	15170	4520	Sisma Y SLD	0	15.2	0	0	1.0E2	0.889
15171	4521	Sisma X SLV	15.4	0	0	0	1.0E2	0.889	15172	4521	Sisma Y SLV	0	15.4	0	0	1.0E2	0.889
15173	4521	Sisma X SLD	15.2	0	0	0	1.0E2	0.889	15174	4521	Sisma Y SLD	0	15.2	0	0	1.0E2	0.889
15175	4522	Sisma X SLV	18.1	0	0	0	1.2E2	0.893	15176	4522	Sisma Y SLV	0	18.1	0	0	1.2E2	0.893
15177	4522	Sisma X SLD	17.8	0	0	0	1.2E2	0.893	15178	4522	Sisma Y SLD	0	17.8	0	0	1.2E2	0.893
15179	4523	Sisma X SLV	18.1	0	0	0	1.2E2	0.893	15180	4523	Sisma Y SLV	0	18.1	0	0	1.2E2	0.893
15181	4523	Sisma X SLD	17.8	0	0	0	1.2E2	0.893	15182	4523	Sisma Y SLD	0	17.8	0	0	1.2E2	0.893
15183	4524	Sisma X SLV	8.9	0	0	0	58.306	0.894	15184	4524	Sisma Y SLV	0	8.9	0	0	58.306	0.894
15185	4524	Sisma X SLD	8.8	0	0	0	58.306	0.894	15186	4524	Sisma Y SLD	0	8.8	0	0	58.306	0.894
15187	4525	Sisma X SLV	8.9	0	0	0	58.306	0.894	15188	4525	Sisma Y SLV	0	8.9	0	0	58.306	0.894
15189	4525	Sisma X SLD	8.8	0	0	0	58.306	0.894	15190	4525	Sisma Y SLD	0	8.8	0	0	58.306	0.894
15191	4526	Sisma X SLV	13.2	0	0	0	85.943	0.9	15192	4526	Sisma Y SLV	0	13.2	0	0	85.943	0.9
15193	4526	Sisma X SLD	13	0	0	0	85.943	0.9	15194	4526	Sisma Y SLD	0	13	0	0	85.943	0.9
15195	4527	Sisma X SLV	13.2	0	0	0	85.943	0.9	15196	4527	Sisma Y SLV	0	13.2	0	0	85.943	0.9
15197	4527	Sisma X SLD	13	0	0	0	85.943	0.9	15198	4527	Sisma Y SLD	0	13	0	0	85.943	0.9
15199	4528	Sisma X SLV	9.7	0	0	0	61.145	0.926	15200	4528	Sisma Y SLV	0	9.7	0	0	61.145	0.926
15201	4528	Sisma X SLD	9.5	0	0	0	61.145	0.926	15202	4528	Sisma Y SLD	0	9.5	0	0	61.145	0.926
15203	4529	Sisma X SLV	9.7	0	0	0	61.145	0.926	15204	4529	Sisma Y SLV	0	9.7	0	0	61.145	0.926
15205	4529	Sisma X SLD	9.5	0	0	0	61.145	0.926	15206	4529	Sisma Y SLD	0	9.5	0	0	61.145	0.926
15207	4530	Sisma X SLV	36.5	0	0	0	2.3E2	0.927	15208	4530	Sisma Y SLV	0	36.5	0	0	2.3E2	0.927
15209	4530	Sisma X SLD	36	0	0	0	2.3E2	0.927	15210	4530	Sisma Y SLD	0	36	0	0	2.3E2	0.927
15211	4531	Sisma X SLV	57.2	0	0	0	3.6E2	0.927	15212	4531	Sisma Y SLV	0	57.2	0	0	3.6E2	0.927
15213	4531	Sisma X SLD	56.3	0	0	0	3.6E2	0.927	15214	4531	Sisma Y SLD	0	56.3	0	0	3.6E2	0.927
15215	4532	Sisma X SLV	52.6	0	0	0	3.3E2	0.927	15216	4532	Sisma Y SLV	0	52.6	0	0	3.3E2	0.927
15217	4532	Sisma X SLD	51.8	0	0	0	3.3E2	0.927	15218	4532	Sisma Y SLD	0	51.8	0	0	3.3E2	0.927
15219	4533	Sisma X SLV	35.6	0	0	0	2.3E2	0.927	15220	4533	Sisma Y SLV	0	35.6	0	0	2.3E2	0.927
15221	4533	Sisma X SLD	35.1	0	0	0	2.3E2	0.927	15222	4533	Sisma Y SLD	0	35.1	0	0	2.3E2	0.927
15223	4534	Sisma X SLV	35.6	0	0	0	2.3E2	0.927	15224	4534	Sisma Y SLV	0	35.6	0	0	2.3E2	0.927
15225	4534	Sisma X SLD	35.1	0	0	0	2.3E2	0.927	15226	4534	Sisma Y SLD	0	35.1	0	0	2.3E2	0.927
15227	4535	Sisma X SLV	37.9	0	0	0	2.4E2	0.927	15228	4535	Sisma Y SLV	0	37.9	0	0	2.4E2	0.927
15229	4535	Sisma X SLD	37.3	0	0	0	2.4E2	0.927	15230	4535	Sisma Y SLD	0	37.3	0	0	2.4E2	0.927
15231	4536	Sisma X SLV	58.5	0	0	0	3.7E2	0.927	15232	4536	Sisma Y SLV	0	58.5	0	0	3.7E2	0.927
15233	4536	Sisma X SLD	57.6	0	0	0	3.7E2	0.927	15234	4536	Sisma Y SLD	0	57.6	0	0	3.7E2	0.927
15235	4537	Sisma X SLV	57.6	0	0	0	3.6E2	0.927	15236	4537	Sisma Y SLV	0	57.6	0	0	3.6E2	0.927
15237	4537	Sisma X SLD	56.6	0	0	0	3.6E2	0.927	15238	4537	Sisma Y SLD	0	56.6	0	0	3.6E2	0.927
15239	4538	Sisma X SLV	22.9	0	0	0	1.4E2	0.927	15240	4538	Sisma Y SLV	0	22.9	0	0	1.4E2	0.927
15241	4538	Sisma X SLD	22.5	0	0	0	1.4E2	0.927	15242	4538	Sisma Y SLD	0	22.5	0	0	1.4E2	0.927
15243	4539	Sisma X SLV	22.9	0	0	0	1.4E2	0.927	15244	4539	Sisma Y SLV	0	22.9	0	0	1.4E2	0.927
15245	4539	Sisma X SLD	22.5	0	0	0	1.4E2	0.927	15246	4539	Sisma Y SLD	0	22.5	0	0	1.4E2	0.927
15247	4540	Sisma X SLV	22.9	0	0	0	1.4E2	0.927	15248	4540	Sisma Y SLV	0	22.9	0	0	1.4E2	0.927
15249	4540	Sisma X SLD	22.5	0	0	0	1.4E2	0.927	15250	4540	Sisma Y SLD	0	22.5	0	0	1.4E2	0.927
15251	4541	Sisma X SLV	22.9	0	0	0	1.4E2	0.927	15252	4541	Sisma Y SLV	0	22.9	0	0	1.4E2	0.927
15253	4541	Sisma X SLD	22.5	0	0	0	1.4E2	0.927	15254	4541	Sisma Y SLD	0	22.5	0	0	1.4E2	0.927
15255	4542	Sisma X SLV	22.9	0	0	0	1.4E2	0.927	15256	4542	Sisma Y SLV	0	22.9	0	0	1.4E2	0.927
15257	4542	Sisma X SLD	22.5	0	0	0	1.4E2	0.927	15258	4542	Sisma Y SLD	0	22.5	0	0	1.4E2	0.927
15259	4543	Sisma X SLV	22.9	0	0	0	1.4E2	0.927	15260	4543	Sisma Y SLV	0	22.9	0	0	1.4E2	0.927
15261	4543	Sisma X SLD	22.5	0	0	0	1.4E2	0.927	15262	4543	Sisma Y SLD	0	22.5	0	0	1.4E2	0.927
15263	4544	Sisma X SLV	22.9	0	0	0	1.4E2	0.927	15264	4544	Sisma Y SLV	0	22.9	0	0	1.4E2	0.927
15265	4544	Sisma X SLD	22.5	0	0	0	1.4E2	0.927	15266	4544	Sisma Y SLD	0	22.5	0	0	1.4E2	0.927

Indice	Nodo	Condizione	Fx	Fy	Fz	Mz	Peso	Gamma	Indice	Nodo	Condizione	Fx	Fy	Fz	Mz	Peso	Gamma
15267	4545	Sisma X SLV	22.9	0	0	0	1.4E2	0.927	15268	4545	Sisma Y SLV	0	22.9	0	0	1.4E2	0.927
15269	4545	Sisma X SLD	22.6	0	0	0	1.4E2	0.927	15270	4545	Sisma Y SLD	0	22.6	0	0	1.4E2	0.927
15271	4546	Sisma X SLV	22.9	0	0	0	145.08	0.927	15272	4546	Sisma Y SLV	0	22.9	0	0	145.08	0.927
15273	4546	Sisma X SLD	22.6	0	0	0	145.08	0.927	15274	4546	Sisma Y SLD	0	22.6	0	0	145.08	0.927
15275	4547	Sisma X SLV	23.1	0	0	0	1.5E2	0.927	15276	4547	Sisma Y SLV	0	23.1	0	0	1.5E2	0.927
15277	4547	Sisma X SLD	22.7	0	0	0	1.5E2	0.927	15278	4547	Sisma Y SLD	0	22.7	0	0	1.5E2	0.927
15279	4548	Sisma X SLV	23.3	0	0	0	1.5E2	0.927	15280	4548	Sisma Y SLV	0	23.3	0	0	1.5E2	0.927
15281	4548	Sisma X SLD	22.9	0	0	0	1.5E2	0.927	15282	4548	Sisma Y SLD	0	22.9	0	0	1.5E2	0.927
15283	4549	Sisma X SLV	23.7	0	0	0	1.5E2	0.927	15284	4549	Sisma Y SLV	0	23.7	0	0	1.5E2	0.927
15285	4549	Sisma X SLD	23.4	0	0	0	1.5E2	0.927	15286	4549	Sisma Y SLD	0	23.4	0	0	1.5E2	0.927
15287	4550	Sisma X SLV	24.4	0	0	0	1.5E2	0.927	15288	4550	Sisma Y SLV	0	24.4	0	0	1.5E2	0.927
15289	4550	Sisma X SLD	24	0	0	0	1.5E2	0.927	15290	4550	Sisma Y SLD	0	24	0	0	1.5E2	0.927
15291	4551	Sisma X SLV	48.8	0	0	0	3.1E2	0.927	15292	4551	Sisma Y SLV	0	48.8	0	0	3.1E2	0.927
15293	4551	Sisma X SLD	48	0	0	0	3.1E2	0.927	15294	4551	Sisma Y SLD	0	48	0	0	3.1E2	0.927
15295	4552	Sisma X SLV	36.7	0	0	0	232.05	0.927	15296	4552	Sisma Y SLV	0	36.7	0	0	232.05	0.927
15297	4552	Sisma X SLD	36.1	0	0	0	232.05	0.927	15298	4552	Sisma Y SLD	0	36.1	0	0	232.05	0.927
15299	4553	Sisma X SLV	58.3	0	0	0	3.7E2	0.927	15300	4553	Sisma Y SLV	0	58.3	0	0	3.7E2	0.927
15301	4553	Sisma X SLD	57.4	0	0	0	3.7E2	0.927	15302	4553	Sisma Y SLD	0	57.4	0	0	3.7E2	0.927
15303	4554	Sisma X SLV	35.6	0	0	0	2.3E2	0.927	15304	4554	Sisma Y SLV	0	35.6	0	0	2.3E2	0.927
15305	4554	Sisma X SLD	35.1	0	0	0	2.3E2	0.927	15306	4554	Sisma Y SLD	0	35.1	0	0	2.3E2	0.927
15307	4555	Sisma X SLV	35.6	0	0	0	2.3E2	0.927	15308	4555	Sisma Y SLV	0	35.6	0	0	2.3E2	0.927
15309	4555	Sisma X SLD	35.1	0	0	0	2.3E2	0.927	15310	4555	Sisma Y SLD	0	35.1	0	0	2.3E2	0.927
15311	4556	Sisma X SLV	39.1	0	0	0	2.5E2	0.927	15312	4556	Sisma Y SLV	0	39.1	0	0	2.5E2	0.927
15313	4556	Sisma X SLD	38.5	0	0	0	2.5E2	0.927	15314	4556	Sisma Y SLD	0	38.5	0	0	2.5E2	0.927
15315	4557	Sisma X SLV	35	0	0	0	2.2E2	0.927	15316	4557	Sisma Y SLV	0	35	0	0	2.2E2	0.927
15317	4557	Sisma X SLD	34.4	0	0	0	2.2E2	0.927	15318	4557	Sisma Y SLD	0	34.4	0	0	2.2E2	0.927
15319	4558	Sisma X SLV	35.6	0	0	0	2.3E2	0.927	15320	4558	Sisma Y SLV	0	35.6	0	0	2.3E2	0.927
15321	4558	Sisma X SLD	35.1	0	0	0	2.3E2	0.927	15322	4558	Sisma Y SLD	0	35.1	0	0	2.3E2	0.927
15323	4559	Sisma X SLV	35.6	0	0	0	2.3E2	0.927	15324	4559	Sisma Y SLV	0	35.6	0	0	2.3E2	0.927
15325	4559	Sisma X SLD	35.1	0	0	0	2.3E2	0.927	15326	4559	Sisma Y SLD	0	35.1	0	0	2.3E2	0.927
15327	4560	Sisma X SLV	35	0	0	0	221.48	0.927	15328	4560	Sisma Y SLV	0	35	0	0	221.48	0.927
15329	4560	Sisma X SLD	34.5	0	0	0	221.48	0.927	15330	4560	Sisma Y SLD	0	34.5	0	0	221.48	0.927
15331	4561	Sisma X SLV	35.6	0	0	0	2.3E2	0.927	15332	4561	Sisma Y SLV	0	35.6	0	0	2.3E2	0.927
15333	4561	Sisma X SLD	35.1	0	0	0	2.3E2	0.927	15334	4561	Sisma Y SLD	0	35.1	0	0	2.3E2	0.927
15335	4562	Sisma X SLV	35.6	0	0	0	2.2E2	0.927	15336	4562	Sisma Y SLV	0	35.6	0	0	2.2E2	0.927
15337	4562	Sisma X SLD	35	0	0	0	2.2E2	0.927	15338	4562	Sisma Y SLD	0	35	0	0	2.2E2	0.927
15339	4563	Sisma X SLV	35.6	0	0	0	2.3E2	0.927	15340	4563	Sisma Y SLV	0	35.6	0	0	2.3E2	0.927
15341	4563	Sisma X SLD	35	0	0	0	2.3E2	0.927	15342	4563	Sisma Y SLD	0	35	0	0	2.3E2	0.927
15343	4564	Sisma X SLV	35.2	0	0	0	222.59	0.927	15344	4564	Sisma Y SLV	0	35.2	0	0	222.59	0.927
15345	4564	Sisma X SLD	34.7	0	0	0	222.59	0.927	15346	4564	Sisma Y SLD	0	34.7	0	0	222.59	0.927
15347	4565	Sisma X SLV	35.6	0	0	0	2.3E2	0.927	15348	4565	Sisma Y SLV	0	35.6	0	0	2.3E2	0.927
15349	4565	Sisma X SLD	35	0	0	0	2.3E2	0.927	15350	4565	Sisma Y SLD	0	35	0	0	2.3E2	0.927
15351	4566	Sisma X SLV	35.7	0	0	0	2.3E2	0.927	15352	4566	Sisma Y SLV	0	35.7	0	0	2.3E2	0.927
15353	4566	Sisma X SLD	35.1	0	0	0	2.3E2	0.927	15354	4566	Sisma Y SLD	0	35.1	0	0	2.3E2	0.927
15355	4567	Sisma X SLV	35.5	0	0	0	2.2E2	0.927	15356	4567	Sisma Y SLV	0	35.5	0	0	2.2E2	0.927
15357	4567	Sisma X SLD	35	0	0	0	2.2E2	0.927	15358	4567	Sisma Y SLD	0	35	0	0	2.2E2	0.927
15359	4568	Sisma X SLV	35.7	0	0	0	2.3E2	0.927	15360	4568	Sisma Y SLV	0	35.7	0	0	2.3E2	0.927
15361	4568	Sisma X SLD	35.2	0	0	0	2.3E2	0.927	15362	4568	Sisma Y SLD	0	35.2	0	0	2.3E2	0.927
15363	4569	Sisma X SLV	35.6	0	0	0	2.2E2	0.927	15364	4569	Sisma Y SLV	0	35.6	0	0	2.2E2	0.927
15365	4569	Sisma X SLD	35	0	0	0	2.2E2	0.927	15366	4569	Sisma Y SLD	0	35	0	0	2.2E2	0.927
15367	4570	Sisma X SLV	36	0	0	0	2.3E2	0.927	15368	4570	Sisma Y SLV	0	36	0	0	2.3E2	0.927
15369	4570	Sisma X SLD	35.4	0	0	0	2.3E2	0.927	15370	4570	Sisma Y SLD	0	35.4	0	0	2.3E2	0.927
15371	4571	Sisma X SLV	35.4	0	0	0	223.48	0.927	15372	4571	Sisma Y SLV	0	35.4	0	0	223.48	0.927
15373	4571	Sisma X SLD	34.8	0	0	0	223.48	0.927	15374	4571	Sisma Y SLD	0	34.8	0	0	223.48	0.927
15375	4572	Sisma X SLV	22.5	0	0	0	1.4E2	0.927	15376	4572	Sisma Y SLV	0	22.5	0	0	1.4E2	0.927
15377	4572	Sisma X SLD	22.1	0	0	0	1.4E2	0.927	15378	4572	Sisma Y SLD	0	22.1	0	0	1.4E2	0.927
15379	4573	Sisma X SLV	37.7	0	0	0	2.4E2	0.927	15380	4573	Sisma Y SLV	0	37.7	0	0	2.4E2	0.927
15381	4573	Sisma X SLD	37.1	0	0	0	2.4E2	0.927	15382	4573	Sisma Y SLD	0	37.1	0	0	2.4E2	0.927
15383	4574	Sisma X SLV	36.1	0	0	0	2.3E2	0.927	15384	4574	Sisma Y SLV	0	36.1	0	0	2.3E2	0.927
15385	4574	Sisma X SLD	35.5	0	0	0	2.3E2	0.927	15386	4574	Sisma Y SLD	0	35.5	0	0	2.3E2	0.927
15387	4575	Sisma X SLV	35.2	0	0	0	2.2E2	0.927	15388	4575	Sisma Y SLV	0	35.2	0	0	2.2E2	0.927
15389	4575	Sisma X SLD	34.6	0	0	0	2.2E2	0.927	15390	4575	Sisma Y SLD	0	34.6	0	0	2.2E2	0.927
15391	4576	Sisma X SLV	35.5	0	0	0	2.2E2	0.927	15392	4576	Sisma Y SLV	0	35.5	0	0	2.2E2	0.927
15393	4576	Sisma X SLD	34.9	0	0	0	2.2E2	0.927	15394	4576	Sisma Y SLD	0	34.9	0	0	2.2E2	0.927
15395	4577	Sisma X SLV	36.7	0	0	0	2.3E2	0.927	15396	4577	Sisma Y SLV	0	36.7	0	0	2.3E2	0.927
15397	4577	Sisma X SLD	36.1	0	0	0	2.3E2	0.927	15398	4577	Sisma Y SLD	0	36.1	0	0	2.3E2	0.927
15399	4578	Sisma X SLV	37.2	0	0	0	235.11	0.927	15400	4578	Sisma Y SLV	0	37.2	0	0	235.11	0.927
15401	4578	Sisma X SLD	36.6	0	0	0	235.11	0.927	15402	4578	Sisma Y SLD	0	36.6	0	0	235.11	0.927
15403	4579	Sisma X SLV	22.5	0	0	0	1.4E2	0.927	15404	4579	Sisma Y SLV	0	22.5	0	0	1.4E2	0.927
15405	4579	Sisma X SLD	22.1	0	0	0	1.4E2	0.927	15406	4579	Sisma Y SLD	0	22.1	0	0	1.4E2	0.927
15407	4580	Sisma X SLV	36.5	0	0	0	2.3E2	0.927	15408	4580	Sisma Y SLV	0	36.5	0	0	2.3E2	0.927
15409	4580	Sisma X SLD	35.9	0	0	0	2.3E2	0.927	15410	4580	Sisma Y SLD	0	35.9	0	0	2.3E2	0.927
15411	4581	Sisma X SLV	36.3	0	0	0	2.3E2	0.927	15412	4581	Sisma Y SLV	0	36.3	0	0	2.3E2	0.927
15413	4581	Sisma X SLD	35.7	0	0	0	2.3E2	0.927	15414	4581	Sisma Y SLD	0	35.7	0	0	2.3E2	0.927
15415	4582	Sisma X SLV	22.5	0	0	0	1.4E2	0.927	15416	4582	Sisma Y SLV	0	22.5	0	0	1.4E2	0.927
15417	4582	Sisma X SLD	22.2	0	0	0	1.4E2	0.927	15418	4582	Sisma Y SLD	0	22.2	0	0	1.4E2	0.927
15419	4583	Sisma X SLV	38.2	0	0	0	2.4E2	0.927	15420	4583	Sisma Y SLV	0	38.2	0	0	2.4E2	0.927
15421	4583	Sisma X SLD	37.6	0	0	0	2.4E2	0.927	15422	4583	Sisma Y SLD	0	37.6	0	0	2.4E2	0.927
15423	4584	Sisma X SLV	37	0	0	0	2.3E2	0.927	15424	4584	Sisma Y SLV	0	37	0	0	2.3E2	0.927
15425	4584	Sisma X SLD	36.4	0	0	0	2.3E2	0.927	15426	4584	Sisma Y SLD	0	36.4	0	0	2.3E2	0.927
15427	4585	Sisma X SLV	36.9	0	0	0	2.3E2	0.927	15428	4585	Sisma Y SLV	0	36.9	0	0	2.3E2	0.927
15429	4585	Sisma X SLD	36.3	0	0	0	2.3E2	0.927	15430	4585	Sisma Y SLD	0	36.3	0	0	2.3E2	0.927
15431	4586	Sisma X SLV	35.2	0	0	0	2.2E2	0.927	15432	4586	Sisma Y SLV	0	35.2	0	0	2.2E2	0.927
15433	4586	Sisma X SLD	34.7	0	0	0	2.2E2	0.927	15434	4586	Sisma Y SLD	0	34.7	0	0	2.2E2	0.927
15435	4587	Sisma X SLV	39.6	0	0	0	2.5E2	0.927	15436	4587	Sisma Y SLV	0	39.6	0	0	2.5E2	0.927
15437	4587	Sisma X SLD	38.9	0	0	0	2.5E2	0.927	15438	4587	Sisma Y SLD	0	38.9	0	0	2.5E2	0.927
15439	4588	Sisma X SLV	39.5	0	0	0	2.5E2	0.927	15440	4588	Sisma Y SLV	0	39.5	0	0	2.5E2	0.927
15441	4588	Sisma X SLD	38.8	0	0	0	2.5E2	0.927	15442	4588	Sisma Y SLD	0	38.8	0	0	2.5E2	0.927
15443	4589	Sisma X SLV	35.5	0	0	0	2.2E2	0.927	15444	4589	Sisma Y SLV	0	35.5	0	0	2.2E2	0.927
15445	4589	Sisma X SLD	34.9	0	0	0	2.2E2	0.927	15446	4589	Sisma Y SLD	0	34.9	0	0	2.2E2	0.927
15447	4590	Sisma X SLV	33.1	0	0	0	2.1E2	0.927	15448	4590	Sisma Y SLV	0	33.1	0	0	2.1E2	0.927
15449	4590	Sisma X SLD	32.6	0	0	0	2.1E2	0.927	15450	4590	Sisma Y SLD	0	32.6	0	0	2.1E2	0.927
15451	4591	Sisma X SLV	35.5	0	0	0	2.2E2	0.927	15452	4591	Sisma Y SLV	0	35.5	0	0	2.2E2	0.927
15453	4591	Sisma X SLD	35	0	0	0	2.2E2	0.927	15454	4591	Sisma Y SLD	0	35	0	0	2.2E2	0.927
15455	4592	Sisma X SLV	22.5	0	0	0	1.4E2	0.927	15456	4592	Sisma Y SLV	0	22.5	0	0	1.4E2	0.927
15457	4592	Sisma X SLD	22.2	0	0	0	1.4E2	0.927	15458	4592	Sisma Y SLD	0	22.2	0	0	1.4E2	0.927
15459	4593	Sisma X SLV	35.3	0	0	0	2.2E2	0.927	15460	4593	Sisma Y SLV	0	35.3	0	0	2.2E2	0.927
15461	4593	Sisma X SLD	34.8	0	0	0	2.2E2	0.927	15462	4593	Sisma Y SLD	0	34.8	0	0	2.2E2	0.927
15463	4594	Sisma X SLV	34.7	0	0	0	2.2E2	0.927	15464	4594	Sisma Y SLV	0	34.7	0	0	2.2E2	0.927
15465	4594	Sisma X SLD	34.2	0	0	0	2.2E2	0.927	15466	4594	Sisma Y SLD	0	34.2	0	0	2.2E2	0.927
15467	4595	Sisma X SLV	36.6	0	0	0	2.3E2	0.927	15468	4595	Sisma Y SLV	0	36.6	0	0	2.3E2	0.927
15469	4595	Sisma X SLD	36	0	0	0	2.3E2	0.927	15470	4595	Sisma Y SLD	0	36	0	0	2.3E2	0.927
15471	4596	Sisma X SLV	37.3	0	0	0	2.4E2	0.927	15472	4596	Sisma Y SLV	0	37.3	0	0	2.4E2	0.927
15473	4596	Sisma X SLD	36.7	0	0	0	2.4E2	0.927	15474	4596	Sisma Y SLD	0	36.7	0	0	2.4E2	0.927

Indice	Nodo	Condizione	Fx	Fy	Fz	Mz	Peso	Gamma	Indice	Nodo	Condizione	Fx	Fy	Fz	Mz	Peso	Gamma
15475	4597	Sisma X SLV	22.5	0	0	0	1.4E2	0.927	15476	4597	Sisma Y SLV	0	22.5	0	0	1.4E2	0.927
15477	4597	Sisma X SLD	22.2	0	0	0	1.4E2	0.927	15478	4597	Sisma Y SLD	0	22.2	0	0	1.4E2	0.927
15479	4598	Sisma X SLV	36.7	0	0	0	2.3E2	0.927	15480	4598	Sisma Y SLV	0	36.7	0	0	2.3E2	0.927
15481	4598	Sisma X SLD	36.1	0	0	0	2.3E2	0.927	15482	4598	Sisma Y SLD	0	36.1	0	0	2.3E2	0.927
15483	4599	Sisma X SLV	37.2	0	0	0	235.17	0.927	15484	4599	Sisma Y SLV	0	37.2	0	0	235.17	0.927
15485	4599	Sisma X SLD	36.6	0	0	0	235.17	0.927	15486	4599	Sisma Y SLD	0	36.6	0	0	235.17	0.927
15487	4600	Sisma X SLV	37	0	0	0	2.3E2	0.927	15488	4600	Sisma Y SLV	0	37	0	0	2.3E2	0.927
15489	4600	Sisma X SLD	36.4	0	0	0	2.3E2	0.927	15490	4600	Sisma Y SLD	0	36.4	0	0	2.3E2	0.927
15491	4601	Sisma X SLV	36.2	0	0	0	2.3E2	0.927	15492	4601	Sisma Y SLV	0	36.2	0	0	2.3E2	0.927
15493	4601	Sisma X SLD	35.6	0	0	0	2.3E2	0.927	15494	4601	Sisma Y SLD	0	35.6	0	0	2.3E2	0.927
15495	4602	Sisma X SLV	22.5	0	0	0	1.4E2	0.927	15496	4602	Sisma Y SLV	0	22.5	0	0	1.4E2	0.927
15497	4602	Sisma X SLD	22.2	0	0	0	1.4E2	0.927	15498	4602	Sisma Y SLD	0	22.2	0	0	1.4E2	0.927
15499	4603	Sisma X SLV	35.7	0	0	0	2.3E2	0.927	15500	4603	Sisma Y SLV	0	35.7	0	0	2.3E2	0.927
15501	4603	Sisma X SLD	35.1	0	0	0	2.3E2	0.927	15502	4603	Sisma Y SLD	0	35.1	0	0	2.3E2	0.927
15503	4604	Sisma X SLV	37.2	0	0	0	2.3E2	0.927	15504	4604	Sisma Y SLV	0	37.2	0	0	2.3E2	0.927
15505	4604	Sisma X SLD	36.6	0	0	0	2.3E2	0.927	15506	4604	Sisma Y SLD	0	36.6	0	0	2.3E2	0.927
15507	4605	Sisma X SLV	35.1	0	0	0	2.2E2	0.927	15508	4605	Sisma Y SLV	0	35.1	0	0	2.2E2	0.927
15509	4605	Sisma X SLD	34.6	0	0	0	2.2E2	0.927	15510	4605	Sisma Y SLD	0	34.6	0	0	2.2E2	0.927
15511	4606	Sisma X SLV	22.5	0	0	0	142.48	0.927	15512	4606	Sisma Y SLV	0	22.5	0	0	142.48	0.927
15513	4606	Sisma X SLD	22.2	0	0	0	142.48	0.927	15514	4606	Sisma Y SLD	0	22.2	0	0	142.48	0.927
15515	4607	Sisma X SLV	36.7	0	0	0	2.3E2	0.927	15516	4607	Sisma Y SLV	0	36.7	0	0	2.3E2	0.927
15517	4607	Sisma X SLD	36.1	0	0	0	2.3E2	0.927	15518	4607	Sisma Y SLD	0	36.1	0	0	2.3E2	0.927
15519	4608	Sisma X SLV	36.2	0	0	0	2.3E2	0.927	15520	4608	Sisma Y SLV	0	36.2	0	0	2.3E2	0.927
15521	4608	Sisma X SLD	35.6	0	0	0	2.3E2	0.927	15522	4608	Sisma Y SLD	0	35.6	0	0	2.3E2	0.927
15523	4609	Sisma X SLV	36.5	0	0	0	2.3E2	0.927	15524	4609	Sisma Y SLV	0	36.5	0	0	2.3E2	0.927
15525	4609	Sisma X SLD	35.9	0	0	0	2.3E2	0.927	15526	4609	Sisma Y SLD	0	35.9	0	0	2.3E2	0.927
15527	4610	Sisma X SLV	36.1	0	0	0	2.3E2	0.927	15528	4610	Sisma Y SLV	0	36.1	0	0	2.3E2	0.927
15529	4610	Sisma X SLD	35.5	0	0	0	2.3E2	0.927	15530	4610	Sisma Y SLD	0	35.5	0	0	2.3E2	0.927
15531	4611	Sisma X SLV	38.6	0	0	0	2.4E2	0.927	15532	4611	Sisma Y SLV	0	38.6	0	0	2.4E2	0.927
15533	4611	Sisma X SLD	37.9	0	0	0	2.4E2	0.927	15534	4611	Sisma Y SLD	0	37.9	0	0	2.4E2	0.927
15535	4612	Sisma X SLV	38.5	0	0	0	2.4E2	0.927	15536	4612	Sisma Y SLV	0	38.5	0	0	2.4E2	0.927
15537	4612	Sisma X SLD	37.9	0	0	0	2.4E2	0.927	15538	4612	Sisma Y SLD	0	37.9	0	0	2.4E2	0.927
15539	4613	Sisma X SLV	34.6	0	0	0	2.2E2	0.927	15540	4613	Sisma Y SLV	0	34.6	0	0	2.2E2	0.927
15541	4613	Sisma X SLD	34.1	0	0	0	2.2E2	0.927	15542	4613	Sisma Y SLD	0	34.1	0	0	2.2E2	0.927
15543	4614	Sisma X SLV	36.3	0	0	0	229.32	0.927	15544	4614	Sisma Y SLV	0	36.3	0	0	229.32	0.927
15545	4614	Sisma X SLD	35.7	0	0	0	229.32	0.927	15546	4614	Sisma Y SLD	0	35.7	0	0	229.32	0.927
15547	4615	Sisma X SLV	33.1	0	0	0	2.1E2	0.927	15548	4615	Sisma Y SLV	0	33.1	0	0	2.1E2	0.927
15549	4615	Sisma X SLD	32.6	0	0	0	2.1E2	0.927	15550	4615	Sisma Y SLD	0	32.6	0	0	2.1E2	0.927
15551	4616	Sisma X SLV	35	0	0	0	2.2E2	0.927	15552	4616	Sisma Y SLV	0	35	0	0	2.2E2	0.927
15553	4616	Sisma X SLD	34.4	0	0	0	2.2E2	0.927	15554	4616	Sisma Y SLD	0	34.4	0	0	2.2E2	0.927
15555	4617	Sisma X SLV	22.6	0	0	0	1.4E2	0.927	15556	4617	Sisma Y SLV	0	22.6	0	0	1.4E2	0.927
15557	4617	Sisma X SLD	22.2	0	0	0	1.4E2	0.927	15558	4617	Sisma Y SLD	0	22.2	0	0	1.4E2	0.927
15559	4618	Sisma X SLV	35.6	0	0	0	2.3E2	0.927	15560	4618	Sisma Y SLV	0	35.6	0	0	2.3E2	0.927
15561	4618	Sisma X SLD	35	0	0	0	2.3E2	0.927	15562	4618	Sisma Y SLD	0	35	0	0	2.3E2	0.927
15563	4619	Sisma X SLV	36.2	0	0	0	2.3E2	0.927	15564	4619	Sisma Y SLV	0	36.2	0	0	2.3E2	0.927
15565	4619	Sisma X SLD	35.6	0	0	0	2.3E2	0.927	15566	4619	Sisma Y SLD	0	35.6	0	0	2.3E2	0.927
15567	4620	Sisma X SLV	35.4	0	0	0	2.2E2	0.927	15568	4620	Sisma Y SLV	0	35.4	0	0	2.2E2	0.927
15569	4620	Sisma X SLD	34.8	0	0	0	2.2E2	0.927	15570	4620	Sisma Y SLD	0	34.8	0	0	2.2E2	0.927
15571	4621	Sisma X SLV	34.8	0	0	0	2.2E2	0.927	15572	4621	Sisma Y SLV	0	34.8	0	0	2.2E2	0.927
15573	4621	Sisma X SLD	34.3	0	0	0	2.2E2	0.927	15574	4621	Sisma Y SLD	0	34.3	0	0	2.2E2	0.927
15575	4622	Sisma X SLV	35	0	0	0	2.2E2	0.927	15576	4622	Sisma Y SLV	0	35	0	0	2.2E2	0.927
15577	4622	Sisma X SLD	34.4	0	0	0	2.2E2	0.927	15578	4622	Sisma Y SLD	0	34.4	0	0	2.2E2	0.927
15579	4623	Sisma X SLV	36.5	0	0	0	2.3E2	0.927	15580	4623	Sisma Y SLV	0	36.5	0	0	2.3E2	0.927
15581	4623	Sisma X SLD	35.9	0	0	0	2.3E2	0.927	15582	4623	Sisma Y SLD	0	35.9	0	0	2.3E2	0.927
15583	4624	Sisma X SLV	22.6	0	0	0	142.85	0.927	15584	4624	Sisma Y SLV	0	22.6	0	0	142.85	0.927
15585	4624	Sisma X SLD	22.2	0	0	0	142.85	0.927	15586	4624	Sisma Y SLD	0	22.2	0	0	142.85	0.927
15587	4625	Sisma X SLV	37.9	0	0	0	2.4E2	0.927	15588	4625	Sisma Y SLV	0	37.9	0	0	2.4E2	0.927
15589	4625	Sisma X SLD	37.3	0	0	0	2.4E2	0.927	15590	4625	Sisma Y SLD	0	37.3	0	0	2.4E2	0.927
15591	4626	Sisma X SLV	37.9	0	0	0	239.33	0.927	15592	4626	Sisma Y SLV	0	37.9	0	0	239.33	0.927
15593	4626	Sisma X SLD	37.3	0	0	0	239.33	0.927	15594	4626	Sisma Y SLD	0	37.3	0	0	239.33	0.927
15595	4627	Sisma X SLV	36	0	0	0	2.3E2	0.927	15596	4627	Sisma Y SLV	0	36	0	0	2.3E2	0.927
15597	4627	Sisma X SLD	35.4	0	0	0	2.3E2	0.927	15598	4627	Sisma Y SLD	0	35.4	0	0	2.3E2	0.927
15599	4628	Sisma X SLV	37.8	0	0	0	2.4E2	0.927	15600	4628	Sisma Y SLV	0	37.8	0	0	2.4E2	0.927
15601	4628	Sisma X SLD	37.2	0	0	0	2.4E2	0.927	15602	4628	Sisma Y SLD	0	37.2	0	0	2.4E2	0.927
15603	4629	Sisma X SLV	37.7	0	0	0	238.43	0.927	15604	4629	Sisma Y SLV	0	37.7	0	0	238.43	0.927
15605	4629	Sisma X SLD	37.1	0	0	0	238.43	0.927	15606	4629	Sisma Y SLD	0	37.1	0	0	238.43	0.927
15607	4630	Sisma X SLV	38.1	0	0	0	240.89	0.927	15608	4630	Sisma Y SLV	0	38.1	0	0	240.89	0.927
15609	4630	Sisma X SLD	37.5	0	0	0	240.89	0.927	15610	4630	Sisma Y SLD	0	37.5	0	0	240.89	0.927
15611	4631	Sisma X SLV	38.2	0	0	0	2.4E2	0.927	15612	4631	Sisma Y SLV	0	38.2	0	0	2.4E2	0.927
15613	4631	Sisma X SLD	37.6	0	0	0	2.4E2	0.927	15614	4631	Sisma Y SLD	0	37.6	0	0	2.4E2	0.927
15615	4632	Sisma X SLV	22.7	0	0	0	143.56	0.927	15616	4632	Sisma Y SLV	0	22.7	0	0	143.56	0.927
15617	4632	Sisma X SLD	22.4	0	0	0	143.56	0.927	15618	4632	Sisma Y SLD	0	22.4	0	0	143.56	0.927
15619	4633	Sisma X SLV	38	0	0	0	2.4E2	0.927	15620	4633	Sisma Y SLV	0	38	0	0	2.4E2	0.927
15621	4633	Sisma X SLD	37.4	0	0	0	2.4E2	0.927	15622	4633	Sisma Y SLD	0	37.4	0	0	2.4E2	0.927
15623	4634	Sisma X SLV	38	0	0	0	2.4E2	0.927	15624	4634	Sisma Y SLV	0	38	0	0	2.4E2	0.927
15625	4634	Sisma X SLD	37.4	0	0	0	2.4E2	0.927	15626	4634	Sisma Y SLD	0	37.4	0	0	2.4E2	0.927
15627	4635	Sisma X SLV	38	0	0	0	2.4E2	0.927	15628	4635	Sisma Y SLV	0	38	0	0	2.4E2	0.927
15629	4635	Sisma X SLD	37.4	0	0	0	2.4E2	0.927	15630	4635	Sisma Y SLD	0	37.4	0	0	2.4E2	0.927
15631	4636	Sisma X SLV	38.1	0	0	0	2.4E2	0.927	15632	4636	Sisma Y SLV	0	38.1	0	0	2.4E2	0.927
15633	4636	Sisma X SLD	37.5	0	0	0	2.4E2	0.927	15634	4636	Sisma Y SLD	0	37.5	0	0	2.4E2	0.927
15635	4637	Sisma X SLV	35.4	0	0	0	2.2E2	0.927	15636	4637	Sisma Y SLV	0	35.4	0	0	2.2E2	0.927
15637	4637	Sisma X SLD	34.9	0	0	0	2.2E2	0.927	15638	4637	Sisma Y SLD	0	34.9	0	0	2.2E2	0.927
15639	4638	Sisma X SLV	37.8	0	0	0	2.4E2	0.927	15640	4638	Sisma Y SLV	0	37.8	0	0	2.4E2	0.927
15641	4638	Sisma X SLD	37.2	0	0	0	2.4E2	0.927	15642	4638	Sisma Y SLD	0	37.2	0	0	2.4E2	0.927
15643	4639	Sisma X SLV	37.8	0	0	0	2.4E2	0.927	15644	4639	Sisma Y SLV	0	37.8	0	0	2.4E2	0.927
15645	4639	Sisma X SLD	37.2	0	0	0	2.4E2	0.927	15646	4639	Sisma Y SLD	0	37.2	0	0	2.4E2	0.927
15647	4640	Sisma X SLV	35.1	0	0	0	2.2E2	0.927	15648	4640	Sisma Y SLV	0	35.1	0	0	2.2E2	0.927
15649	4640	Sisma X SLD	34.5	0	0	0	2.2E2	0.927	15650	4640	Sisma Y SLD	0	34.5	0	0	2.2E2	0.927
15651	4641	Sisma X SLV	35.8	0	0	0	2.3E2	0.927	15652	4641	Sisma Y SLV	0	35.8	0	0	2.3E2	0.927
15653	4641	Sisma X SLD	35.2	0	0	0	2.3E2	0.927	15654	4641	Sisma Y SLD	0	35.2	0	0	2.3E2	0.927
15655	4642	Sisma X SLV	36.1	0	0	0	2.3E2	0.927	15656	4642	Sisma Y SLV	0	36.1	0	0	2.3E2	0.927
15657	4642	Sisma X SLD	35.5	0	0	0	2.3E2	0.927	15658	4642	Sisma Y SLD	0	35.5	0	0	2.3E2	0.927
15659	4643	Sisma X SLV	35.6	0	0	0	224.7	0.927	15660	4643	Sisma Y SLV	0	35.6	0	0	224.7	0.927
15661	4643	Sisma X SLD	35	0	0	0	224.7	0.927	15662	4643	Sisma Y SLD	0	35	0	0	224.7	0.927
15663	4644	Sisma X SLV	23	0	0	0	1.5E2	0.927	15664	4644	Sisma Y SLV	0	23	0	0	1.5E2	0.927
15665	4644	Sisma X SLD	22.6	0	0	0	1.5E2	0.927	15666	4644	Sisma Y SLD	0	22.6	0	0	1.5E2	0.927
15667	4645	Sisma X SLV	36.1	0	0	0	2.3E2	0.927	15668	4645	Sisma Y SLV	0	36.1	0	0	2.3E2	0.927
15669	4645	Sisma X SLD	35.5	0	0	0	2.3E2	0.927	15670	4645	Sisma Y SLD	0	35.5	0	0	2.3E2	0.927
15671	4646	Sisma X SLV	36.5	0	0	0	2.3E2	0.927	15672	4646	Sisma Y SLV	0	36.5	0	0	2.3E2	0.927
15673	4646	Sisma X SLD	35.9	0	0	0	2.3E2	0.927	15674	4646	Sisma Y SLD	0	35.9	0	0	2.3E2	0.927
15675	4647	Sisma X SLV	35.4	0	0	0	2.2E2	0.927	15676	4647	Sisma Y SLV	0	35.4	0	0	2.2E2	0.927

Indice	Nodo	Condizione	Fx	Fy	Fz	Mz	Peso	Gamma	Indice	Nodo	Condizione	Fx	Fy	Fz	Mz	Peso	Gamma
15677	4647	Sisma X SLD	34.8	0	0	0	2.2E2	0.927	15678	4647	Sisma Y SLD	0	34.8	0	0	2.2E2	0.927
15679	4648	Sisma X SLV	37.7	0	0	0	2.4E2	0.927	15680	4648	Sisma Y SLV	0	37.7	0	0	2.4E2	0.927
15681	4648	Sisma X SLD	37.1	0	0	0	2.4E2	0.927	15682	4648	Sisma Y SLD	0	37.1	0	0	2.4E2	0.927
15683	4649	Sisma X SLV	37.7	0	0	0	238.41	0.927	15684	4649	Sisma Y SLV	0	37.7	0	0	238.41	0.927
15685	4649	Sisma X SLD	37.1	0	0	0	238.41	0.927	15686	4649	Sisma Y SLD	0	37.1	0	0	238.41	0.927
15687	4650	Sisma X SLV	37.3	0	0	0	2.4E2	0.927	15688	4650	Sisma Y SLV	0	37.3	0	0	2.4E2	0.927
15689	4650	Sisma X SLD	36.7	0	0	0	2.4E2	0.927	15690	4650	Sisma Y SLD	0	36.7	0	0	2.4E2	0.927
15691	4651	Sisma X SLV	37	0	0	0	2.3E2	0.927	15692	4651	Sisma Y SLV	0	37	0	0	2.3E2	0.927
15693	4651	Sisma X SLD	36.4	0	0	0	2.3E2	0.927	15694	4651	Sisma Y SLD	0	36.4	0	0	2.3E2	0.927
15695	4652	Sisma X SLV	23.4	0	0	0	1.5E2	0.927	15696	4652	Sisma Y SLV	0	23.4	0	0	1.5E2	0.927
15697	4652	Sisma X SLD	23	0	0	0	1.5E2	0.927	15698	4652	Sisma Y SLD	0	23	0	0	1.5E2	0.927
15699	4653	Sisma X SLV	35.3	0	0	0	2.2E2	0.927	15700	4653	Sisma Y SLV	0	35.3	0	0	2.2E2	0.927
15701	4653	Sisma X SLD	34.7	0	0	0	2.2E2	0.927	15702	4653	Sisma Y SLD	0	34.7	0	0	2.2E2	0.927
15703	4654	Sisma X SLV	37.4	0	0	0	2.4E2	0.927	15704	4654	Sisma Y SLV	0	37.4	0	0	2.4E2	0.927
15705	4654	Sisma X SLD	36.9	0	0	0	2.4E2	0.927	15706	4654	Sisma Y SLD	0	36.9	0	0	2.4E2	0.927
15707	4655	Sisma X SLV	35.4	0	0	0	2.2E2	0.928	15708	4655	Sisma Y SLV	0	35.4	0	0	2.2E2	0.928
15709	4655	Sisma X SLD	34.9	0	0	0	2.2E2	0.928	15710	4655	Sisma Y SLD	0	34.9	0	0	2.2E2	0.928
15711	4656	Sisma X SLV	37.3	0	0	0	2.4E2	0.928	15712	4656	Sisma Y SLV	0	37.3	0	0	2.4E2	0.928
15713	4656	Sisma X SLD	36.7	0	0	0	2.4E2	0.928	15714	4656	Sisma Y SLD	0	36.7	0	0	2.4E2	0.928
15715	4657	Sisma X SLV	37.7	0	0	0	2.4E2	0.928	15716	4657	Sisma Y SLV	0	37.7	0	0	2.4E2	0.928
15717	4657	Sisma X SLD	37.1	0	0	0	2.4E2	0.928	15718	4657	Sisma Y SLD	0	37.1	0	0	2.4E2	0.928
15719	4658	Sisma X SLV	37.7	0	0	0	2.4E2	0.928	15720	4658	Sisma Y SLV	0	37.7	0	0	2.4E2	0.928
15721	4658	Sisma X SLD	37.1	0	0	0	2.4E2	0.928	15722	4658	Sisma Y SLD	0	37.1	0	0	2.4E2	0.928
15723	4659	Sisma X SLV	24	0	0	0	1.5E2	0.928	15724	4659	Sisma Y SLV	0	24	0	0	1.5E2	0.928
15725	4659	Sisma X SLD	23.7	0	0	0	1.5E2	0.928	15726	4659	Sisma Y SLD	0	23.7	0	0	1.5E2	0.928
15727	4660	Sisma X SLV	35.3	0	0	0	2.2E2	0.928	15728	4660	Sisma Y SLV	0	35.3	0	0	2.2E2	0.928
15729	4660	Sisma X SLD	34.7	0	0	0	2.2E2	0.928	15730	4660	Sisma Y SLD	0	34.7	0	0	2.2E2	0.928
15731	4661	Sisma X SLV	35.5	0	0	0	2.2E2	0.928	15732	4661	Sisma Y SLV	0	35.5	0	0	2.2E2	0.928
15733	4661	Sisma X SLD	34.9	0	0	0	2.2E2	0.928	15734	4661	Sisma Y SLD	0	34.9	0	0	2.2E2	0.928
15735	4662	Sisma X SLV	39.5	0	0	0	2.5E2	0.928	15736	4662	Sisma Y SLV	0	39.5	0	0	2.5E2	0.928
15737	4662	Sisma X SLD	38.8	0	0	0	2.5E2	0.928	15738	4662	Sisma Y SLD	0	38.8	0	0	2.5E2	0.928
15739	4663	Sisma X SLV	35.2	0	0	0	2.2E2	0.928	15740	4663	Sisma Y SLV	0	35.2	0	0	2.2E2	0.928
15741	4663	Sisma X SLD	34.6	0	0	0	2.2E2	0.928	15742	4663	Sisma Y SLD	0	34.6	0	0	2.2E2	0.928
15743	4664	Sisma X SLV	39.3	0	0	0	2.5E2	0.928	15744	4664	Sisma Y SLV	0	39.3	0	0	2.5E2	0.928
15745	4664	Sisma X SLD	38.6	0	0	0	2.5E2	0.928	15746	4664	Sisma Y SLD	0	38.6	0	0	2.5E2	0.928
15747	4665	Sisma X SLV	34.9	0	0	0	2.2E2	0.928	15748	4665	Sisma Y SLV	0	34.9	0	0	2.2E2	0.928
15749	4665	Sisma X SLD	34.4	0	0	0	2.2E2	0.928	15750	4665	Sisma Y SLD	0	34.4	0	0	2.2E2	0.928
15751	4666	Sisma X SLV	39.4	0	0	0	2.5E2	0.928	15752	4666	Sisma Y SLV	0	39.4	0	0	2.5E2	0.928
15753	4666	Sisma X SLD	38.7	0	0	0	2.5E2	0.928	15754	4666	Sisma Y SLD	0	38.7	0	0	2.5E2	0.928
15755	4667	Sisma X SLV	40.9	0	0	0	2.6E2	0.928	15756	4667	Sisma Y SLV	0	40.9	0	0	2.6E2	0.928
15757	4667	Sisma X SLD	40.2	0	0	0	2.6E2	0.928	15758	4667	Sisma Y SLD	0	40.2	0	0	2.6E2	0.928
15759	4668	Sisma X SLV	39.1	0	0	0	2.5E2	0.928	15760	4668	Sisma Y SLV	0	39.1	0	0	2.5E2	0.928
15761	4668	Sisma X SLD	38.5	0	0	0	2.5E2	0.928	15762	4668	Sisma Y SLD	0	38.5	0	0	2.5E2	0.928
15763	4669	Sisma X SLV	35.1	0	0	0	221.87	0.928	15764	4669	Sisma Y SLV	0	35.1	0	0	221.87	0.928
15765	4669	Sisma X SLD	34.6	0	0	0	221.87	0.928	15766	4669	Sisma Y SLD	0	34.6	0	0	221.87	0.928
15767	4670	Sisma X SLV	39.2	0	0	0	2.5E2	0.928	15768	4670	Sisma Y SLV	0	39.2	0	0	2.5E2	0.928
15769	4670	Sisma X SLD	38.6	0	0	0	2.5E2	0.928	15770	4670	Sisma Y SLD	0	38.6	0	0	2.5E2	0.928
15771	4671	Sisma X SLV	39	0	0	0	246.18	0.928	15772	4671	Sisma Y SLV	0	39	0	0	246.18	0.928
15773	4671	Sisma X SLD	38.3	0	0	0	246.18	0.928	15774	4671	Sisma Y SLD	0	38.3	0	0	246.18	0.928
15775	4672	Sisma X SLV	36.6	0	0	0	2.3E2	0.928	15776	4672	Sisma Y SLV	0	36.6	0	0	2.3E2	0.928
15777	4672	Sisma X SLD	36	0	0	0	2.3E2	0.928	15778	4672	Sisma Y SLD	0	36	0	0	2.3E2	0.928
15779	4673	Sisma X SLV	42.3	0	0	0	2.7E2	0.928	15780	4673	Sisma Y SLV	0	42.3	0	0	2.7E2	0.928
15781	4673	Sisma X SLD	41.7	0	0	0	2.7E2	0.928	15782	4673	Sisma Y SLD	0	41.7	0	0	2.7E2	0.928
15783	4674	Sisma X SLV	38.5	0	0	0	2.4E2	0.928	15784	4674	Sisma Y SLV	0	38.5	0	0	2.4E2	0.928
15785	4674	Sisma X SLD	37.9	0	0	0	2.4E2	0.928	15786	4674	Sisma Y SLD	0	37.9	0	0	2.4E2	0.928
15787	4675	Sisma X SLV	38.4	0	0	0	2.4E2	0.928	15788	4675	Sisma Y SLV	0	38.4	0	0	2.4E2	0.928
15789	4675	Sisma X SLD	37.8	0	0	0	2.4E2	0.928	15790	4675	Sisma Y SLD	0	37.8	0	0	2.4E2	0.928
15791	4676	Sisma X SLV	37.5	0	0	0	2.4E2	0.928	15792	4676	Sisma Y SLV	0	37.5	0	0	2.4E2	0.928
15793	4676	Sisma X SLD	36.9	0	0	0	2.4E2	0.928	15794	4676	Sisma Y SLD	0	36.9	0	0	2.4E2	0.928
15795	4677	Sisma X SLV	39.3	0	0	0	2.5E2	0.928	15796	4677	Sisma Y SLV	0	39.3	0	0	2.5E2	0.928
15797	4677	Sisma X SLD	38.7	0	0	0	2.5E2	0.928	15798	4677	Sisma Y SLD	0	38.7	0	0	2.5E2	0.928
15799	4678	Sisma X SLV	37	0	0	0	2.3E2	0.928	15800	4678	Sisma Y SLV	0	37	0	0	2.3E2	0.928
15801	4678	Sisma X SLD	36.4	0	0	0	2.3E2	0.928	15802	4678	Sisma Y SLD	0	36.4	0	0	2.3E2	0.928
15803	4679	Sisma X SLV	36.8	0	0	0	2.3E2	0.928	15804	4679	Sisma Y SLV	0	36.8	0	0	2.3E2	0.928
15805	4679	Sisma X SLD	36.2	0	0	0	2.3E2	0.928	15806	4679	Sisma Y SLD	0	36.2	0	0	2.3E2	0.928
15807	4680	Sisma X SLV	51.5	0	0	0	3.3E2	0.928	15808	4680	Sisma Y SLV	0	51.5	0	0	3.3E2	0.928
15809	4680	Sisma X SLD	50.7	0	0	0	3.3E2	0.928	15810	4680	Sisma Y SLD	0	50.7	0	0	3.3E2	0.928
15811	4681	Sisma X SLV	36.9	0	0	0	2.3E2	0.928	15812	4681	Sisma Y SLV	0	36.9	0	0	2.3E2	0.928
15813	4681	Sisma X SLD	36.3	0	0	0	2.3E2	0.928	15814	4681	Sisma Y SLD	0	36.3	0	0	2.3E2	0.928
15815	4682	Sisma X SLV	18.3	0	0	0	115.5	0.928	15816	4682	Sisma Y SLV	0	18.3	0	0	115.5	0.928
15817	4682	Sisma X SLD	18	0	0	0	115.5	0.928	15818	4682	Sisma Y SLD	0	18	0	0	115.5	0.928
15819	4683	Sisma X SLV	18.3	0	0	0	115.5	0.928	15820	4683	Sisma Y SLV	0	18.3	0	0	115.5	0.928
15821	4683	Sisma X SLD	18	0	0	0	115.5	0.928	15822	4683	Sisma Y SLD	0	18	0	0	115.5	0.928
15823	4684	Sisma X SLV	47.9	0	0	0	3.0E2	0.928	15824	4684	Sisma Y SLV	0	47.9	0	0	3.0E2	0.928
15825	4684	Sisma X SLD	47.1	0	0	0	3.0E2	0.928	15826	4684	Sisma Y SLD	0	47.1	0	0	3.0E2	0.928
15827	4685	Sisma X SLV	50.5	0	0	0	3.2E2	0.928	15828	4685	Sisma Y SLV	0	50.5	0	0	3.2E2	0.928
15829	4685	Sisma X SLD	49.7	0	0	0	3.2E2	0.928	15830	4685	Sisma Y SLD	0	49.7	0	0	3.2E2	0.928
15831	4686	Sisma X SLV	49.6	0	0	0	3.1E2	0.928	15832	4686	Sisma Y SLV	0	49.6	0	0	3.1E2	0.928
15833	4686	Sisma X SLD	48.8	0	0	0	3.1E2	0.928	15834	4686	Sisma Y SLD	0	48.8	0	0	3.1E2	0.928
15835	4687	Sisma X SLV	23	0	0	0	1.5E2	0.928	15836	4687	Sisma Y SLV	0	23	0	0	1.5E2	0.928
15837	4687	Sisma X SLD	22.7	0	0	0	1.5E2	0.928	15838	4687	Sisma Y SLD	0	22.7	0	0	1.5E2	0.928
15839	4688	Sisma X SLV	23	0	0	0	1.5E2	0.928	15840	4688	Sisma Y SLV	0	23	0	0	1.5E2	0.928
15841	4688	Sisma X SLD	22.7	0	0	0	1.5E2	0.928	15842	4688	Sisma Y SLD	0	22.7	0	0	1.5E2	0.928
15843	4689	Sisma X SLV	23	0	0	0	1.5E2	0.928	15844	4689	Sisma Y SLV	0	23	0	0	1.5E2	0.928
15845	4689	Sisma X SLD	22.7	0	0	0	1.5E2	0.928	15846	4689	Sisma Y SLD	0	22.7	0	0	1.5E2	0.928
15847	4690	Sisma X SLV	23	0	0	0	1.5E2	0.928	15848	4690	Sisma Y SLV	0	23	0	0	1.5E2	0.928
15849	4690	Sisma X SLD	22.7	0	0	0	1.5E2	0.928	15850	4690	Sisma Y SLD	0	22.7	0	0	1.5E2	0.928
15851	4691	Sisma X SLV	23	0	0	0	1.5E2	0.928	15852	4691	Sisma Y SLV	0	23	0	0	1.5E2	0.928
15853	4691	Sisma X SLD	22.7	0	0	0	1.5E2	0.928	15854	4691	Sisma Y SLD	0	22.7	0	0	1.5E2	0.928
15855	4692	Sisma X SLV	23	0	0	0	1.5E2	0.928	15856	4692	Sisma Y SLV	0	23	0	0	1.5E2	0.928
15857	4692	Sisma X SLD	22.7	0	0	0	1.5E2	0.928	15858	4692	Sisma Y SLD	0	22.7	0	0	1.5E2	0.928
15859	4693	Sisma X SLV	23	0	0	0	1.5E2	0.928	15860	4693	Sisma Y SLV	0	23	0	0	1.5E2	0.928
15861	4693	Sisma X SLD	22.7	0	0	0	1.5E2	0.928	15862	4693	Sisma Y SLD	0	22.7	0	0	1.5E2	0.928
15863	4694	Sisma X SLV	23	0	0	0	145.51	0.928	15864	4694	Sisma Y SLV	0	23	0	0	145.51	0.928
15865	4694	Sisma X SLD	22.7	0	0	0	145.51	0.928	15866	4694	Sisma Y SLD	0	22.7	0	0	145.51	0.928
15867	4695	Sisma X SLV	23.1	0	0	0	1.5E2	0.928	15868	4695	Sisma Y SLV	0	23.1	0	0	1.5E2	0.928
15869	4695	Sisma X SLD	22.7	0	0	0	1.5E2	0.928	15870	4695	Sisma Y SLD	0	22.7	0	0	1.5E2	0.928
15871	4696	Sisma X SLV	23.2	0	0	0	1.5E2	0.928	15872	4696	Sisma Y SLV	0	23.2	0	0	1.5E2	0.928
15873	4696	Sisma X SLD	22.8	0	0	0	1.5E2	0.928	15874	4696	Sisma Y SLD	0	22.8	0	0	1.5E2	0.928
15875	4697	Sisma X SLV	23.4	0	0	0	1.5E2	0.928	15876	4697	Sisma Y SLV	0	23.4	0	0	1.5E2	0.928
15877	4697	Sisma X SLD	23	0	0	0	1.5E2	0.928	15878	4697	Sisma Y SLD	0	23	0	0	1.5E2	0.928
15879	4698	Sisma X SLV	23.8	0	0	0	1.5E2	0.928	15880	4698	Sisma Y SLV	0	23.8	0	0	1.5E2	0.928
15881	4698	Sisma X SLD	23.5	0	0	0	1.5E2	0.928	15882	4698	Sisma Y SLD	0	23.5	0	0	1.5E2	0.928
15883	4699	Sisma X SLV	24.5	0	0	0	1.5E2	0.928	15884	4699	Sisma Y SLV	0	24.5	0	0	1.5E2	0.928

Indice	Nodo	Condizione	Fx	Fy	Fz	Mz	Peso	Gamma	Indice	Nodo	Condizione	Fx	Fy	Fz	Mz	Peso	Gamma
15885	4699	Sisma X SLD	24.1	0	0	0	1.5E2	0.928	15886	4699	Sisma Y SLD	0	24.1	0	0	1.5E2	0.928
15887	4700	Sisma X SLV	53.2	0	0	0	3.4E2	0.928	15888	4700	Sisma Y SLV	0	53.2	0	0	3.4E2	0.928
15889	4700	Sisma X SLD	52.4	0	0	0	3.4E2	0.928	15890	4700	Sisma Y SLD	0	52.4	0	0	3.4E2	0.928
15891	4701	Sisma X SLV	65	0	0	0	4.1E2	0.928	15892	4701	Sisma Y SLV	0	65	0	0	4.1E2	0.928
15893	4701	Sisma X SLD	63.9	0	0	0	4.1E2	0.928	15894	4701	Sisma Y SLD	0	63.9	0	0	4.1E2	0.928
15895	4702	Sisma X SLV	27.4	0	0	0	173.25	0.928	15896	4702	Sisma Y SLV	0	27.4	0	0	173.25	0.928
15897	4702	Sisma X SLD	27	0	0	0	173.25	0.928	15898	4702	Sisma Y SLD	0	27	0	0	173.25	0.928
15899	4703	Sisma X SLV	36.6	0	0	0	2.3E2	0.928	15900	4703	Sisma Y SLV	0	36.6	0	0	2.3E2	0.928
15901	4703	Sisma X SLD	36	0	0	0	2.3E2	0.928	15902	4703	Sisma Y SLD	0	36	0	0	2.3E2	0.928
15903	4704	Sisma X SLV	24.9	0	0	0	157.07	0.928	15904	4704	Sisma Y SLV	0	24.9	0	0	157.07	0.928
15905	4704	Sisma X SLD	24.5	0	0	0	157.07	0.928	15906	4704	Sisma Y SLD	0	24.5	0	0	157.07	0.928
15907	4705	Sisma X SLV	36.6	0	0	0	2.3E2	0.928	15908	4705	Sisma Y SLV	0	36.6	0	0	2.3E2	0.928
15909	4705	Sisma X SLD	36	0	0	0	2.3E2	0.928	15910	4705	Sisma Y SLD	0	36	0	0	2.3E2	0.928
15911	4706	Sisma X SLV	25	0	0	0	1.6E2	0.929	15912	4706	Sisma Y SLV	0	25	0	0	1.6E2	0.929
15913	4706	Sisma X SLD	24.6	0	0	0	1.6E2	0.929	15914	4706	Sisma Y SLD	0	24.6	0	0	1.6E2	0.929
15915	4707	Sisma X SLV	36.7	0	0	0	2.3E2	0.929	15916	4707	Sisma Y SLV	0	36.7	0	0	2.3E2	0.929
15917	4707	Sisma X SLD	36.2	0	0	0	2.3E2	0.929	15918	4707	Sisma Y SLD	0	36.2	0	0	2.3E2	0.929
15919	4708	Sisma X SLV	23.8	0	0	0	1.5E2	0.929	15920	4708	Sisma Y SLV	0	23.8	0	0	1.5E2	0.929
15921	4708	Sisma X SLD	23.5	0	0	0	1.5E2	0.929	15922	4708	Sisma Y SLD	0	23.5	0	0	1.5E2	0.929
15923	4709	Sisma X SLV	25.2	0	0	0	1.6E2	0.929	15924	4709	Sisma Y SLV	0	25.2	0	0	1.6E2	0.929
15925	4709	Sisma X SLD	24.8	0	0	0	1.6E2	0.929	15926	4709	Sisma Y SLD	0	24.8	0	0	1.6E2	0.929
15927	4710	Sisma X SLV	38.6	0	0	0	2.4E2	0.93	15928	4710	Sisma Y SLV	0	38.6	0	0	2.4E2	0.93
15929	4710	Sisma X SLD	38	0	0	0	2.4E2	0.93	15930	4710	Sisma Y SLD	0	38	0	0	2.4E2	0.93
15931	4711	Sisma X SLV	38.6	0	0	0	2.4E2	0.93	15932	4711	Sisma Y SLV	0	38.6	0	0	2.4E2	0.93
15933	4711	Sisma X SLD	38	0	0	0	2.4E2	0.93	15934	4711	Sisma Y SLD	0	38	0	0	2.4E2	0.93
15935	4712	Sisma X SLV	40.2	0	0	0	2.5E2	0.93	15936	4712	Sisma Y SLV	0	40.2	0	0	2.5E2	0.93
15937	4712	Sisma X SLD	39.6	0	0	0	2.5E2	0.93	15938	4712	Sisma Y SLD	0	39.6	0	0	2.5E2	0.93
15939	4713	Sisma X SLV	40.2	0	0	0	2.5E2	0.93	15940	4713	Sisma Y SLV	0	40.2	0	0	2.5E2	0.93
15941	4713	Sisma X SLD	39.6	0	0	0	2.5E2	0.93	15942	4713	Sisma Y SLD	0	39.6	0	0	2.5E2	0.93
15943	4714	Sisma X SLV	25.4	0	0	0	1.6E2	0.93	15944	4714	Sisma Y SLV	0	25.4	0	0	1.6E2	0.93
15945	4714	Sisma X SLD	25	0	0	0	1.6E2	0.93	15946	4714	Sisma Y SLD	0	25	0	0	1.6E2	0.93
15947	4715	Sisma X SLV	37.1	0	0	0	2.3E2	0.93	15948	4715	Sisma Y SLV	0	37.1	0	0	2.3E2	0.93
15949	4715	Sisma X SLD	36.6	0	0	0	2.3E2	0.93	15950	4715	Sisma Y SLD	0	36.6	0	0	2.3E2	0.93
15951	4716	Sisma X SLV	21.3	0	0	0	1.3E2	0.93	15952	4716	Sisma Y SLV	0	21.3	0	0	1.3E2	0.93
15953	4716	Sisma X SLD	21	0	0	0	1.3E2	0.93	15954	4716	Sisma Y SLD	0	21	0	0	1.3E2	0.93
15955	4717	Sisma X SLV	26.5	0	0	0	1.7E2	0.931	15956	4717	Sisma Y SLV	0	26.5	0	0	1.7E2	0.931
15957	4717	Sisma X SLD	26.1	0	0	0	1.7E2	0.931	15958	4717	Sisma Y SLD	0	26.1	0	0	1.7E2	0.931
15959	4718	Sisma X SLV	25.8	0	0	0	1.6E2	0.931	15960	4718	Sisma Y SLV	0	25.8	0	0	1.6E2	0.931
15961	4718	Sisma X SLD	25.4	0	0	0	1.6E2	0.931	15962	4718	Sisma Y SLD	0	25.4	0	0	1.6E2	0.931
15963	4719	Sisma X SLV	24.3	0	0	0	1.5E2	0.932	15964	4719	Sisma Y SLV	0	24.3	0	0	1.5E2	0.932
15965	4719	Sisma X SLD	23.9	0	0	0	1.5E2	0.932	15966	4719	Sisma Y SLD	0	23.9	0	0	1.5E2	0.932
15967	4720	Sisma X SLV	39.6	0	0	0	2.5E2	0.933	15968	4720	Sisma Y SLV	0	39.6	0	0	2.5E2	0.933
15969	4720	Sisma X SLD	38.9	0	0	0	2.5E2	0.933	15970	4720	Sisma Y SLD	0	38.9	0	0	2.5E2	0.933
15971	4721	Sisma X SLV	39.6	0	0	0	2.5E2	0.933	15972	4721	Sisma Y SLV	0	39.6	0	0	2.5E2	0.933
15973	4721	Sisma X SLD	38.9	0	0	0	2.5E2	0.933	15974	4721	Sisma Y SLD	0	38.9	0	0	2.5E2	0.933
15975	4722	Sisma X SLV	38	0	0	0	2.4E2	0.933	15976	4722	Sisma Y SLV	0	38	0	0	2.4E2	0.933
15977	4722	Sisma X SLD	37.4	0	0	0	2.4E2	0.933	15978	4722	Sisma Y SLD	0	37.4	0	0	2.4E2	0.933
15979	4723	Sisma X SLV	26.2	0	0	0	1.6E2	0.933	15980	4723	Sisma Y SLV	0	26.2	0	0	1.6E2	0.933
15981	4723	Sisma X SLD	25.8	0	0	0	1.6E2	0.933	15982	4723	Sisma Y SLD	0	25.8	0	0	1.6E2	0.933
15983	4724	Sisma X SLV	27.9	0	0	0	1.8E2	0.933	15984	4724	Sisma Y SLV	0	27.9	0	0	1.8E2	0.933
15985	4724	Sisma X SLD	27.5	0	0	0	1.8E2	0.933	15986	4724	Sisma Y SLD	0	27.5	0	0	1.8E2	0.933
15987	4725	Sisma X SLV	27.9	0	0	0	1.8E2	0.933	15988	4725	Sisma Y SLV	0	27.9	0	0	1.8E2	0.933
15989	4725	Sisma X SLD	27.5	0	0	0	1.8E2	0.933	15990	4725	Sisma Y SLD	0	27.5	0	0	1.8E2	0.933
15991	4726	Sisma X SLV	41.2	0	0	0	2.6E2	0.933	15992	4726	Sisma Y SLV	0	41.2	0	0	2.6E2	0.933
15993	4726	Sisma X SLD	40.5	0	0	0	2.6E2	0.933	15994	4726	Sisma Y SLD	0	40.5	0	0	2.6E2	0.933
15995	4727	Sisma X SLV	41.2	0	0	0	2.6E2	0.933	15996	4727	Sisma Y SLV	0	41.2	0	0	2.6E2	0.933
15997	4727	Sisma X SLD	40.5	0	0	0	2.6E2	0.933	15998	4727	Sisma Y SLD	0	40.5	0	0	2.6E2	0.933
15999	4728	Sisma X SLV	21.3	0	0	0	133.67	0.933	16000	4728	Sisma Y SLV	0	21.3	0	0	133.67	0.933
16001	4728	Sisma X SLD	21	0	0	0	133.67	0.933	16002	4728	Sisma Y SLD	0	21	0	0	133.67	0.933
16003	4729	Sisma X SLV	17.3	0	0	0	1.1E2	0.933	16004	4729	Sisma Y SLV	0	17.3	0	0	1.1E2	0.933
16005	4729	Sisma X SLD	17	0	0	0	1.1E2	0.933	16006	4729	Sisma Y SLD	0	17	0	0	1.1E2	0.933
16007	4730	Sisma X SLV	17.3	0	0	0	1.1E2	0.933	16008	4730	Sisma Y SLV	0	17.3	0	0	1.1E2	0.933
16009	4730	Sisma X SLD	17	0	0	0	1.1E2	0.933	16010	4730	Sisma Y SLD	0	17	0	0	1.1E2	0.933
16011	4731	Sisma X SLV	34	0	0	0	2.1E2	0.933	16012	4731	Sisma Y SLV	0	34	0	0	2.1E2	0.933
16013	4731	Sisma X SLD	33.4	0	0	0	2.1E2	0.933	16014	4731	Sisma Y SLD	0	33.4	0	0	2.1E2	0.933
16015	4732	Sisma X SLV	34	0	0	0	2.1E2	0.933	16016	4732	Sisma Y SLV	0	34	0	0	2.1E2	0.933
16017	4732	Sisma X SLD	33.4	0	0	0	2.1E2	0.933	16018	4732	Sisma Y SLD	0	33.4	0	0	2.1E2	0.933
16019	4733	Sisma X SLV	24.7	0	0	0	1.6E2	0.934	16020	4733	Sisma Y SLV	0	24.7	0	0	1.6E2	0.934
16021	4733	Sisma X SLD	24.3	0	0	0	1.6E2	0.934	16022	4733	Sisma Y SLD	0	24.3	0	0	1.6E2	0.934
16023	4734	Sisma X SLV	27.3	0	0	0	1.7E2	0.934	16024	4734	Sisma Y SLV	0	27.3	0	0	1.7E2	0.934
16025	4734	Sisma X SLD	26.9	0	0	0	1.7E2	0.934	16026	4734	Sisma Y SLD	0	26.9	0	0	1.7E2	0.934
16027	4735	Sisma X SLV	26.7	0	0	0	1.7E2	0.934	16028	4735	Sisma Y SLV	0	26.7	0	0	1.7E2	0.934
16029	4735	Sisma X SLD	26.3	0	0	0	1.7E2	0.934	16030	4735	Sisma Y SLD	0	26.3	0	0	1.7E2	0.934
16031	4736	Sisma X SLV	39	0	0	0	2.4E2	0.936	16032	4736	Sisma Y SLV	0	39	0	0	2.4E2	0.936
16033	4736	Sisma X SLD	38.4	0	0	0	2.4E2	0.936	16034	4736	Sisma Y SLD	0	38.4	0	0	2.4E2	0.936
16035	4737	Sisma X SLV	40.6	0	0	0	254.33	0.936	16036	4737	Sisma Y SLV	0	40.6	0	0	254.33	0.936
16037	4737	Sisma X SLD	40	0	0	0	254.33	0.936	16038	4737	Sisma Y SLD	0	40	0	0	254.33	0.936
16039	4738	Sisma X SLV	40.6	0	0	0	254.33	0.936	16040	4738	Sisma Y SLV	0	40.6	0	0	254.33	0.936
16041	4738	Sisma X SLD	40	0	0	0	254.33	0.936	16042	4738	Sisma Y SLD	0	40	0	0	254.33	0.936
16043	4739	Sisma X SLV	42.2	0	0	0	2.6E2	0.936	16044	4739	Sisma Y SLV	0	42.2	0	0	2.6E2	0.936
16045	4739	Sisma X SLD	41.5	0	0	0	2.6E2	0.936	16046	4739	Sisma Y SLD	0	41.5	0	0	2.6E2	0.936
16047	4740	Sisma X SLV	42.2	0	0	0	2.6E2	0.936	16048	4740	Sisma Y SLV	0	42.2	0	0	2.6E2	0.936
16049	4740	Sisma X SLD	41.5	0	0	0	2.6E2	0.936	16050	4740	Sisma Y SLD	0	41.5	0	0	2.6E2	0.936
16051	4741	Sisma X SLV	10.7	0	0	0	67.257	0.936	16052	4741	Sisma Y SLV	0	10.7	0	0	67.257	0.936
16053	4741	Sisma X SLD	10.6	0	0	0	67.257	0.936	16054	4741	Sisma Y SLD	0	10.6	0	0	67.257	0.936
16055	4742	Sisma X SLV	13.6	0	0	0	84.922	0.936	16056	4742	Sisma Y SLV	0	13.6	0	0	84.922	0.936
16057	4742	Sisma X SLD	13.4	0	0	0	84.922	0.936	16058	4742	Sisma Y SLD	0	13.4	0	0	84.922	0.936
16059	4743	Sisma X SLV	49.1	0	0	0	3.1E2	0.937	16060	4743	Sisma Y SLV	0	49.1	0	0	3.1E2	0.937
16061	4743	Sisma X SLD	48.4	0	0	0	3.1E2	0.937	16062	4743	Sisma Y SLD	0	48.4	0	0	3.1E2	0.937
16063	4744	Sisma X SLV	41.8	0	0	0	2.6E2	0.937	16064	4744	Sisma Y SLV	0	41.8	0	0	2.6E2	0.937
16065	4744	Sisma X SLD	41.2	0	0	0	2.6E2	0.937	16066	4744	Sisma Y SLD	0	41.2	0	0	2.6E2	0.937
16067	4745	Sisma X SLV	25.3	0	0	0	1.6E2	0.937	16068	4745	Sisma Y SLV	0	25.3	0	0	1.6E2	0.937
16069	4745	Sisma X SLD	24.8	0	0	0	1.6E2	0.937	16070	4745	Sisma Y SLD	0	24.8	0	0	1.6E2	0.937
16071	4746	Sisma X SLV	42	0	0	0	2.6E2	0.937	16072	4746	Sisma Y SLV	0	42	0	0	2.6E2	0.937
16073	4746	Sisma X SLD	41.3	0	0	0	2.6E2	0.937	16074	4746	Sisma Y SLD	0	41.3	0	0	2.6E2	0.937
16075	4747	Sisma X SLV	28.2	0	0	0	1.8E2	0.938	16076	4747	Sisma Y SLV	0	28.2	0	0	1.8E2	0.938
16077	4747	Sisma X SLD	27.8	0	0	0	1.8E2	0.938	16078	4747	Sisma Y SLD	0	27.8	0	0	1.8E2	0.938
16079	4748	Sisma X SLV	22.7	0	0	0	1.4E2	0.938	16080	4748	Sisma Y SLV	0	22.7	0	0	1.4E2	0.938
16081	4748	Sisma X SLD	22.3	0	0	0	1.4E2	0.938	16082	4748	Sisma Y SLD	0	22.3	0	0	1.4E2	0.938
16083	4749	Sisma X SLV	22.7	0	0	0	1.4E2	0.938	16084	4749	Sisma Y SLV	0	22.7	0	0	1.4E2	0.938
16085	4749	Sisma X SLD	22.3	0	0	0	1.4E2	0.938	16086	4749	Sisma Y SLD	0	22.3	0	0	1.4E2	0.938

Indice	Nodo	Condizione	Fx	Fy	Fz	Mz	Peso	Gamma	Indice	Nodo	Condizione	Fx	Fy	Fz	Mz	Peso	Gamma
16087	4750	Sisma X SLV	41.8	0	0	0	2.6E2	0.939	16088	4750	Sisma Y SLV	0	41.8	0	0	2.6E2	0.939
16089	4750	Sisma X SLD	41.1	0	0	0	2.6E2	0.939	16090	4750	Sisma Y SLD	0	41.1	0	0	2.6E2	0.939
16091	4751	Sisma X SLV	41.8	0	0	0	2.6E2	0.939	16092	4751	Sisma Y SLV	0	41.8	0	0	2.6E2	0.939
16093	4751	Sisma X SLD	41.1	0	0	0	2.6E2	0.939	16094	4751	Sisma Y SLD	0	41.1	0	0	2.6E2	0.939
16095	4752	Sisma X SLV	40.1	0	0	0	250.12	0.939	16096	4752	Sisma Y SLV	0	40.1	0	0	250.12	0.939
16097	4752	Sisma X SLD	39.4	0	0	0	250.12	0.939	16098	4752	Sisma Y SLD	0	39.4	0	0	250.12	0.939
16099	4753	Sisma X SLV	43.4	0	0	0	2.7E2	0.939	16100	4753	Sisma Y SLV	0	43.4	0	0	2.7E2	0.939
16101	4753	Sisma X SLD	42.7	0	0	0	2.7E2	0.939	16102	4753	Sisma Y SLD	0	42.7	0	0	2.7E2	0.939
16103	4754	Sisma X SLV	43.4	0	0	0	2.7E2	0.939	16104	4754	Sisma Y SLV	0	43.4	0	0	2.7E2	0.939
16105	4754	Sisma X SLD	42.7	0	0	0	2.7E2	0.939	16106	4754	Sisma Y SLD	0	42.7	0	0	2.7E2	0.939
16107	4755	Sisma X SLV	25.8	0	0	0	1.6E2	0.94	16108	4755	Sisma Y SLV	0	25.8	0	0	1.6E2	0.94
16109	4755	Sisma X SLD	25.4	0	0	0	1.6E2	0.94	16110	4755	Sisma Y SLD	0	25.4	0	0	1.6E2	0.94
16111	4756	Sisma X SLV	40.9	0	0	0	2.6E2	0.94	16112	4756	Sisma Y SLV	0	40.9	0	0	2.6E2	0.94
16113	4756	Sisma X SLD	40.2	0	0	0	2.6E2	0.94	16114	4756	Sisma Y SLD	0	40.2	0	0	2.6E2	0.94
16115	4757	Sisma X SLV	35.2	0	0	0	2.2E2	0.94	16116	4757	Sisma Y SLV	0	35.2	0	0	2.2E2	0.94
16117	4757	Sisma X SLD	34.6	0	0	0	2.2E2	0.94	16118	4757	Sisma Y SLD	0	34.6	0	0	2.2E2	0.94
16119	4758	Sisma X SLV	35.2	0	0	0	2.2E2	0.94	16120	4758	Sisma Y SLV	0	35.2	0	0	2.2E2	0.94
16121	4758	Sisma X SLD	34.6	0	0	0	2.2E2	0.94	16122	4758	Sisma Y SLD	0	34.6	0	0	2.2E2	0.94
16123	4759	Sisma X SLV	42	0	0	0	2.6E2	0.941	16124	4759	Sisma Y SLV	0	42	0	0	2.6E2	0.941
16125	4759	Sisma X SLD	41.4	0	0	0	2.6E2	0.941	16126	4759	Sisma Y SLD	0	41.4	0	0	2.6E2	0.941
16127	4760	Sisma X SLV	20.2	0	0	0	1.3E2	0.942	16128	4760	Sisma Y SLV	0	20.2	0	0	1.3E2	0.942
16129	4760	Sisma X SLD	19.9	0	0	0	1.3E2	0.942	16130	4760	Sisma Y SLD	0	19.9	0	0	1.3E2	0.942
16131	4761	Sisma X SLV	20.2	0	0	0	1.3E2	0.942	16132	4761	Sisma Y SLV	0	20.2	0	0	1.3E2	0.942
16133	4761	Sisma X SLD	19.9	0	0	0	1.3E2	0.942	16134	4761	Sisma Y SLD	0	19.9	0	0	1.3E2	0.942
16135	4762	Sisma X SLV	29.2	0	0	0	1.8E2	0.942	16136	4762	Sisma Y SLV	0	29.2	0	0	1.8E2	0.942
16137	4762	Sisma X SLD	28.8	0	0	0	1.8E2	0.942	16138	4762	Sisma Y SLD	0	28.8	0	0	1.8E2	0.942
16139	4763	Sisma X SLV	22.7	0	0	0	1.4E2	0.942	16140	4763	Sisma Y SLV	0	22.7	0	0	1.4E2	0.942
16141	4763	Sisma X SLD	22.3	0	0	0	1.4E2	0.942	16142	4763	Sisma Y SLD	0	22.3	0	0	1.4E2	0.942
16143	4764	Sisma X SLV	22.7	0	0	0	1.4E2	0.942	16144	4764	Sisma Y SLV	0	22.7	0	0	1.4E2	0.942
16145	4764	Sisma X SLD	22.3	0	0	0	1.4E2	0.942	16146	4764	Sisma Y SLD	0	22.3	0	0	1.4E2	0.942
16147	4765	Sisma X SLV	41.7	0	0	0	2.6E2	0.942	16148	4765	Sisma Y SLV	0	41.7	0	0	2.6E2	0.942
16149	4765	Sisma X SLD	41.1	0	0	0	2.6E2	0.942	16150	4765	Sisma Y SLD	0	41.1	0	0	2.6E2	0.942
16151	4766	Sisma X SLV	43.1	0	0	0	2.7E2	0.943	16152	4766	Sisma Y SLV	0	43.1	0	0	2.7E2	0.943
16153	4766	Sisma X SLD	42.4	0	0	0	2.7E2	0.943	16154	4766	Sisma Y SLD	0	42.4	0	0	2.7E2	0.943
16155	4767	Sisma X SLV	43.1	0	0	0	2.7E2	0.943	16156	4767	Sisma Y SLV	0	43.1	0	0	2.7E2	0.943
16157	4767	Sisma X SLD	42.4	0	0	0	2.7E2	0.943	16158	4767	Sisma Y SLD	0	42.4	0	0	2.7E2	0.943
16159	4768	Sisma X SLV	41.3	0	0	0	2.6E2	0.943	16160	4768	Sisma Y SLV	0	41.3	0	0	2.6E2	0.943
16161	4768	Sisma X SLD	40.6	0	0	0	2.6E2	0.943	16162	4768	Sisma Y SLD	0	40.6	0	0	2.6E2	0.943
16163	4769	Sisma X SLV	44.7	0	0	0	2.8E2	0.943	16164	4769	Sisma Y SLV	0	44.7	0	0	2.8E2	0.943
16165	4769	Sisma X SLD	44	0	0	0	2.8E2	0.943	16166	4769	Sisma Y SLD	0	44	0	0	2.8E2	0.943
16167	4770	Sisma X SLV	44.7	0	0	0	277.8	0.943	16168	4770	Sisma Y SLV	0	44.7	0	0	277.8	0.943
16169	4770	Sisma X SLD	44	0	0	0	277.8	0.943	16170	4770	Sisma Y SLD	0	44	0	0	277.8	0.943
16171	4771	Sisma X SLV	39.7	0	0	0	2.5E2	0.943	16172	4771	Sisma Y SLV	0	39.7	0	0	2.5E2	0.943
16173	4771	Sisma X SLD	39.1	0	0	0	2.5E2	0.943	16174	4771	Sisma Y SLD	0	39.1	0	0	2.5E2	0.943
16175	4772	Sisma X SLV	26.5	0	0	0	1.6E2	0.943	16176	4772	Sisma Y SLV	0	26.5	0	0	1.6E2	0.943
16177	4772	Sisma X SLD	26.1	0	0	0	1.6E2	0.943	16178	4772	Sisma Y SLD	0	26.1	0	0	1.6E2	0.943
16179	4773	Sisma X SLV	40.8	0	0	0	253.24	0.943	16180	4773	Sisma Y SLV	0	40.8	0	0	253.24	0.943
16181	4773	Sisma X SLD	40.1	0	0	0	253.24	0.943	16182	4773	Sisma Y SLD	0	40.1	0	0	253.24	0.943
16183	4774	Sisma X SLV	39.8	0	0	0	2.5E2	0.945	16184	4774	Sisma Y SLV	0	39.8	0	0	2.5E2	0.945
16185	4774	Sisma X SLD	39.2	0	0	0	2.5E2	0.945	16186	4774	Sisma Y SLD	0	39.2	0	0	2.5E2	0.945
16187	4775	Sisma X SLV	26	0	0	0	1.6E2	0.947	16188	4775	Sisma Y SLV	0	26	0	0	1.6E2	0.947
16189	4775	Sisma X SLD	25.6	0	0	0	1.6E2	0.947	16190	4775	Sisma Y SLD	0	25.6	0	0	1.6E2	0.947
16191	4776	Sisma X SLV	21.1	0	0	0	1.3E2	0.947	16192	4776	Sisma Y SLV	0	21.1	0	0	1.3E2	0.947
16193	4776	Sisma X SLD	20.8	0	0	0	1.3E2	0.947	16194	4776	Sisma Y SLD	0	20.8	0	0	1.3E2	0.947
16195	4777	Sisma X SLV	18.2	0	0	0	1.1E2	0.947	16196	4777	Sisma Y SLV	0	18.2	0	0	1.1E2	0.947
16197	4777	Sisma X SLD	17.9	0	0	0	1.1E2	0.947	16198	4777	Sisma Y SLD	0	17.9	0	0	1.1E2	0.947
16199	4778	Sisma X SLV	18.2	0	0	0	1.1E2	0.947	16200	4778	Sisma Y SLV	0	18.2	0	0	1.1E2	0.947
16201	4778	Sisma X SLD	17.9	0	0	0	1.1E2	0.947	16202	4778	Sisma Y SLD	0	17.9	0	0	1.1E2	0.947
16203	4779	Sisma X SLV	22	0	0	0	1.4E2	0.947	16204	4779	Sisma Y SLV	0	22	0	0	1.4E2	0.947
16205	4779	Sisma X SLD	21.7	0	0	0	1.4E2	0.947	16206	4779	Sisma Y SLD	0	21.7	0	0	1.4E2	0.947
16207	4780	Sisma X SLV	22	0	0	0	1.4E2	0.947	16208	4780	Sisma Y SLV	0	22	0	0	1.4E2	0.947
16209	4780	Sisma X SLD	21.7	0	0	0	1.4E2	0.947	16210	4780	Sisma Y SLD	0	21.7	0	0	1.4E2	0.947
16211	4781	Sisma X SLV	15	0	0	0	92.797	0.947	16212	4781	Sisma Y SLV	0	15	0	0	92.797	0.947
16213	4781	Sisma X SLD	14.7	0	0	0	92.797	0.947	16214	4781	Sisma Y SLD	0	14.7	0	0	92.797	0.947
16215	4782	Sisma X SLV	13.5	0	0	0	83.803	0.947	16216	4782	Sisma Y SLV	0	13.5	0	0	83.803	0.947
16217	4782	Sisma X SLD	13.3	0	0	0	83.803	0.947	16218	4782	Sisma Y SLD	0	13.3	0	0	83.803	0.947
16219	4783	Sisma X SLV	20.5	0	0	0	1.3E2	0.947	16220	4783	Sisma Y SLV	0	20.5	0	0	1.3E2	0.947
16221	4783	Sisma X SLD	20.2	0	0	0	1.3E2	0.947	16222	4783	Sisma Y SLD	0	20.2	0	0	1.3E2	0.947
16223	4784	Sisma X SLV	20.5	0	0	0	1.3E2	0.947	16224	4784	Sisma Y SLV	0	20.5	0	0	1.3E2	0.947
16225	4784	Sisma X SLD	20.2	0	0	0	1.3E2	0.947	16226	4784	Sisma Y SLD	0	20.2	0	0	1.3E2	0.947
16227	4785	Sisma X SLV	22.8	0	0	0	1.4E2	0.947	16228	4785	Sisma Y SLV	0	22.8	0	0	1.4E2	0.947
16229	4785	Sisma X SLD	22.5	0	0	0	1.4E2	0.947	16230	4785	Sisma Y SLD	0	22.5	0	0	1.4E2	0.947
16231	4786	Sisma X SLV	22.8	0	0	0	1.4E2	0.947	16232	4786	Sisma Y SLV	0	22.8	0	0	1.4E2	0.947
16233	4786	Sisma X SLD	22.5	0	0	0	1.4E2	0.947	16234	4786	Sisma Y SLD	0	22.5	0	0	1.4E2	0.947
16235	4787	Sisma X SLV	21.9	0	0	0	135.56	0.947	16236	4787	Sisma Y SLV	0	21.9	0	0	135.56	0.947
16237	4787	Sisma X SLD	21.5	0	0	0	135.56	0.947	16238	4787	Sisma Y SLD	0	21.5	0	0	135.56	0.947
16239	4788	Sisma X SLV	21.9	0	0	0	135.46	0.947	16240	4788	Sisma Y SLV	0	21.9	0	0	135.46	0.947
16241	4788	Sisma X SLD	21.5	0	0	0	135.46	0.947	16242	4788	Sisma Y SLD	0	21.5	0	0	135.46	0.947
16243	4789	Sisma X SLV	19.7	0	0	0	1.2E2	0.947	16244	4789	Sisma Y SLV	0	19.7	0	0	1.2E2	0.947
16245	4789	Sisma X SLD	19.4	0	0	0	1.2E2	0.947	16246	4789	Sisma Y SLD	0	19.4	0	0	1.2E2	0.947
16247	4790	Sisma X SLV	19.9	0	0	0	1.2E2	0.947	16248	4790	Sisma Y SLV	0	19.9	0	0	1.2E2	0.947
16249	4790	Sisma X SLD	19.5	0	0	0	1.2E2	0.947	16250	4790	Sisma Y SLD	0	19.5	0	0	1.2E2	0.947
16251	4791	Sisma X SLV	23.2	0	0	0	1.4E2	0.947	16252	4791	Sisma Y SLV	0	23.2	0	0	1.4E2	0.947
16253	4791	Sisma X SLD	22.9	0	0	0	1.4E2	0.947	16254	4791	Sisma Y SLD	0	22.9	0	0	1.4E2	0.947
16255	4792	Sisma X SLV	42.2	0	0	0	2.6E2	0.948	16256	4792	Sisma Y SLV	0	42.2	0	0	2.6E2	0.948
16257	4792	Sisma X SLD	41.6	0	0	0	2.6E2	0.948	16258	4792	Sisma Y SLD	0	41.6	0	0	2.6E2	0.948
16259	4793	Sisma X SLV	42.2	0	0	0	2.6E2	0.948	16260	4793	Sisma Y SLV	0	42.2	0	0	2.6E2	0.948
16261	4793	Sisma X SLD	41.6	0	0	0	2.6E2	0.948	16262	4793	Sisma Y SLD	0	41.6	0	0	2.6E2	0.948
16263	4794	Sisma X SLV	38.6	0	0	0	2.4E2	0.95	16264	4794	Sisma Y SLV	0	38.6	0	0	2.4E2	0.95
16265	4794	Sisma X SLD	38	0	0	0	2.4E2	0.95	16266	4794	Sisma Y SLD	0	38	0	0	2.4E2	0.95
16267	4795	Sisma X SLV	38.6	0	0	0	2.4E2	0.95	16268	4795	Sisma Y SLV	0	38.6	0	0	2.4E2	0.95
16269	4795	Sisma X SLD	38	0	0	0	2.4E2	0.95	16270	4795	Sisma Y SLD	0	38	0	0	2.4E2	0.95
16271	4796	Sisma X SLV	48.6	0	0	0	3.0E2	0.958	16272	4796	Sisma Y SLV	0	48.6	0	0	3.0E2	0.958
16273	4796	Sisma X SLD	47.8	0	0	0	3.0E2	0.958	16274	4796	Sisma Y SLD	0	47.8	0	0	3.0E2	0.958
16275	4797	Sisma X SLV	27.8	0	0	0	166.26	0.979	16276	4797	Sisma Y SLV	0	27.8	0	0	166.26	0.979
16277	4797	Sisma X SLD	27.3	0	0	0	166.26	0.979	16278	4797	Sisma Y SLD	0	27.3	0	0	166.26	0.979
16279	4798	Sisma X SLV	27.8	0	0	0	166.26	0.979	16280	4798	Sisma Y SLV	0	27.8	0	0	166.26	0.979
16281	4798	Sisma X SLD	27.3	0	0	0	166.26	0.979	16282	4798	Sisma Y SLD	0	27.3	0	0	166.26	0.979
16283	4799	Sisma X SLV	27.9	0	0	0	1.6E2	0.991	16284	4799	Sisma Y SLV	0	27.9	0	0	1.6E2	0.991
16285	4799	Sisma X SLD	27.4	0	0	0	1.6E2	0.991	16286	4799	Sisma Y SLD	0	27.4	0	0	1.6E2	0.991
16287	4800	Sisma X SLV	27.9	0	0	0	1.6E2	0.991	16288	4800	Sisma Y SLV	0	27.9	0	0	1.6E2	0.991
16289	4800	Sisma X SLD	27.4	0	0	0	1.6E2	0.991	16290	4800	Sisma Y SLD	0	27.4	0	0	1.6E2	0.991
16291	4801	Sisma X SLV	37.5	0	0	0	2.2E2	0.993	16292	4801	Sisma Y SLV	0	37.5	0	0	2.2E2	0.993
16293	4801	Sisma X SLD	36.9	0	0	0	2.2E2	0.993	16294	4801	Sisma Y SLD	0	36.9	0	0	2.2E2	0.993

Indice	Nodo	Condizione	Fx	Fy	Fz	Mz	Peso	Gamma	Indice	Nodo	Condizione	Fx	Fy	Fz	Mz	Peso	Gamma
16295	4802	Sisma X SLV	61.1	0	0	0	3.6E2	0.993	16296	4802	Sisma Y SLV	0	61.1	0	0	3.6E2	0.993
16297	4802	Sisma X SLD	60.1	0	0	0	3.6E2	0.993	16298	4802	Sisma Y SLD	0	60.1	0	0	3.6E2	0.993
16299	4803	Sisma X SLV	56.1	0	0	0	3.3E2	0.993	16300	4803	Sisma Y SLV	0	56.1	0	0	3.3E2	0.993
16301	4803	Sisma X SLD	55.2	0	0	0	3.3E2	0.993	16302	4803	Sisma Y SLD	0	55.2	0	0	3.3E2	0.993
16303	4804	Sisma X SLV	38.2	0	0	0	2.3E2	0.993	16304	4804	Sisma Y SLV	0	38.2	0	0	2.3E2	0.993
16305	4804	Sisma X SLD	37.6	0	0	0	2.3E2	0.993	16306	4804	Sisma Y SLD	0	37.6	0	0	2.3E2	0.993
16307	4805	Sisma X SLV	38.2	0	0	0	2.3E2	0.993	16308	4805	Sisma Y SLV	0	38.2	0	0	2.3E2	0.993
16309	4805	Sisma X SLD	37.6	0	0	0	2.3E2	0.993	16310	4805	Sisma Y SLD	0	37.6	0	0	2.3E2	0.993
16311	4806	Sisma X SLV	39.7	0	0	0	2.3E2	0.993	16312	4806	Sisma Y SLV	0	39.7	0	0	2.3E2	0.993
16313	4806	Sisma X SLD	39.1	0	0	0	2.3E2	0.993	16314	4806	Sisma Y SLD	0	39.1	0	0	2.3E2	0.993
16315	4807	Sisma X SLV	60.8	0	0	0	3.6E2	0.993	16316	4807	Sisma Y SLV	0	60.8	0	0	3.6E2	0.993
16317	4807	Sisma X SLD	59.8	0	0	0	3.6E2	0.993	16318	4807	Sisma Y SLD	0	59.8	0	0	3.6E2	0.993
16319	4808	Sisma X SLV	59.8	0	0	0	352.9	0.993	16320	4808	Sisma Y SLV	0	59.8	0	0	352.9	0.993
16321	4808	Sisma X SLD	58.8	0	0	0	352.9	0.993	16322	4808	Sisma Y SLD	0	58.8	0	0	352.9	0.993
16323	4809	Sisma X SLV	24.6	0	0	0	1.4E2	0.993	16324	4809	Sisma Y SLV	0	24.6	0	0	1.4E2	0.993
16325	4809	Sisma X SLD	24.2	0	0	0	1.4E2	0.993	16326	4809	Sisma Y SLD	0	24.2	0	0	1.4E2	0.993
16327	4810	Sisma X SLV	24.6	0	0	0	1.4E2	0.993	16328	4810	Sisma Y SLV	0	24.6	0	0	1.4E2	0.993
16329	4810	Sisma X SLD	24.2	0	0	0	1.4E2	0.993	16330	4810	Sisma Y SLD	0	24.2	0	0	1.4E2	0.993
16331	4811	Sisma X SLV	24.6	0	0	0	1.4E2	0.993	16332	4811	Sisma Y SLV	0	24.6	0	0	1.4E2	0.993
16333	4811	Sisma X SLD	24.2	0	0	0	1.4E2	0.993	16334	4811	Sisma Y SLD	0	24.2	0	0	1.4E2	0.993
16335	4812	Sisma X SLV	24.6	0	0	0	1.4E2	0.993	16336	4812	Sisma Y SLV	0	24.6	0	0	1.4E2	0.993
16337	4812	Sisma X SLD	24.2	0	0	0	1.4E2	0.993	16338	4812	Sisma Y SLD	0	24.2	0	0	1.4E2	0.993
16339	4813	Sisma X SLV	24.6	0	0	0	1.4E2	0.993	16340	4813	Sisma Y SLV	0	24.6	0	0	1.4E2	0.993
16341	4813	Sisma X SLD	24.2	0	0	0	1.4E2	0.993	16342	4813	Sisma Y SLD	0	24.2	0	0	1.4E2	0.993
16343	4814	Sisma X SLV	24.6	0	0	0	1.4E2	0.993	16344	4814	Sisma Y SLV	0	24.6	0	0	1.4E2	0.993
16345	4814	Sisma X SLD	24.2	0	0	0	1.4E2	0.993	16346	4814	Sisma Y SLD	0	24.2	0	0	1.4E2	0.993
16347	4815	Sisma X SLV	24.6	0	0	0	1.4E2	0.993	16348	4815	Sisma Y SLV	0	24.6	0	0	1.4E2	0.993
16349	4815	Sisma X SLD	24.2	0	0	0	1.4E2	0.993	16350	4815	Sisma Y SLD	0	24.2	0	0	1.4E2	0.993
16351	4816	Sisma X SLV	24.6	0	0	0	1.5E2	0.993	16352	4816	Sisma Y SLV	0	24.6	0	0	1.5E2	0.993
16353	4816	Sisma X SLD	24.2	0	0	0	1.5E2	0.993	16354	4816	Sisma Y SLD	0	24.2	0	0	1.5E2	0.993
16355	4817	Sisma X SLV	24.6	0	0	0	1.5E2	0.993	16356	4817	Sisma Y SLV	0	24.6	0	0	1.5E2	0.993
16357	4817	Sisma X SLD	24.2	0	0	0	1.5E2	0.993	16358	4817	Sisma Y SLD	0	24.2	0	0	1.5E2	0.993
16359	4818	Sisma X SLV	24.7	0	0	0	1.5E2	0.993	16360	4818	Sisma Y SLV	0	24.7	0	0	1.5E2	0.993
16361	4818	Sisma X SLD	24.3	0	0	0	1.5E2	0.993	16362	4818	Sisma Y SLD	0	24.3	0	0	1.5E2	0.993
16363	4819	Sisma X SLV	25	0	0	0	1.5E2	0.993	16364	4819	Sisma Y SLV	0	25	0	0	1.5E2	0.993
16365	4819	Sisma X SLD	24.6	0	0	0	1.5E2	0.993	16366	4819	Sisma Y SLD	0	24.6	0	0	1.5E2	0.993
16367	4820	Sisma X SLV	25.4	0	0	0	1.5E2	0.993	16368	4820	Sisma Y SLV	0	25.4	0	0	1.5E2	0.993
16369	4820	Sisma X SLD	25	0	0	0	1.5E2	0.993	16370	4820	Sisma Y SLD	0	25	0	0	1.5E2	0.993
16371	4821	Sisma X SLV	25.9	0	0	0	1.5E2	0.993	16372	4821	Sisma Y SLV	0	25.9	0	0	1.5E2	0.993
16373	4821	Sisma X SLD	25.5	0	0	0	1.5E2	0.993	16374	4821	Sisma Y SLD	0	25.5	0	0	1.5E2	0.993
16375	4822	Sisma X SLV	51.9	0	0	0	306.43	0.993	16376	4822	Sisma Y SLV	0	51.9	0	0	306.43	0.993
16377	4822	Sisma X SLD	51.1	0	0	0	306.43	0.993	16378	4822	Sisma Y SLD	0	51.1	0	0	306.43	0.993
16379	4823	Sisma X SLV	37.4	0	0	0	2.2E2	0.993	16380	4823	Sisma Y SLV	0	37.4	0	0	2.2E2	0.993
16381	4823	Sisma X SLD	36.8	0	0	0	2.2E2	0.993	16382	4823	Sisma Y SLD	0	36.8	0	0	2.2E2	0.993
16383	4824	Sisma X SLV	55	0	0	0	3.2E2	0.993	16384	4824	Sisma Y SLV	0	55	0	0	3.2E2	0.993
16385	4824	Sisma X SLD	54.2	0	0	0	3.2E2	0.993	16386	4824	Sisma Y SLD	0	54.2	0	0	3.2E2	0.993
16387	4825	Sisma X SLV	38.2	0	0	0	2.3E2	0.993	16388	4825	Sisma Y SLV	0	38.2	0	0	2.3E2	0.993
16389	4825	Sisma X SLD	37.6	0	0	0	2.3E2	0.993	16390	4825	Sisma Y SLD	0	37.6	0	0	2.3E2	0.993
16391	4826	Sisma X SLV	38.2	0	0	0	2.3E2	0.993	16392	4826	Sisma Y SLV	0	38.2	0	0	2.3E2	0.993
16393	4826	Sisma X SLD	37.6	0	0	0	2.3E2	0.993	16394	4826	Sisma Y SLD	0	37.6	0	0	2.3E2	0.993
16395	4827	Sisma X SLV	41	0	0	0	2.4E2	0.993	16396	4827	Sisma Y SLV	0	41	0	0	2.4E2	0.993
16397	4827	Sisma X SLD	40.4	0	0	0	2.4E2	0.993	16398	4827	Sisma Y SLD	0	40.4	0	0	2.4E2	0.993
16399	4828	Sisma X SLV	37.5	0	0	0	2.2E2	0.993	16400	4828	Sisma Y SLV	0	37.5	0	0	2.2E2	0.993
16401	4828	Sisma X SLD	36.9	0	0	0	2.2E2	0.993	16402	4828	Sisma Y SLD	0	36.9	0	0	2.2E2	0.993
16403	4829	Sisma X SLV	38.2	0	0	0	2.3E2	0.993	16404	4829	Sisma Y SLV	0	38.2	0	0	2.3E2	0.993
16405	4829	Sisma X SLD	37.6	0	0	0	2.3E2	0.993	16406	4829	Sisma Y SLD	0	37.6	0	0	2.3E2	0.993
16407	4830	Sisma X SLV	38.2	0	0	0	2.3E2	0.993	16408	4830	Sisma Y SLV	0	38.2	0	0	2.3E2	0.993
16409	4830	Sisma X SLD	37.6	0	0	0	2.3E2	0.993	16410	4830	Sisma Y SLD	0	37.6	0	0	2.3E2	0.993
16411	4831	Sisma X SLV	37.6	0	0	0	2.2E2	0.993	16412	4831	Sisma Y SLV	0	37.6	0	0	2.2E2	0.993
16413	4831	Sisma X SLD	37	0	0	0	2.2E2	0.993	16414	4831	Sisma Y SLD	0	37	0	0	2.2E2	0.993
16415	4832	Sisma X SLV	38.2	0	0	0	2.3E2	0.993	16416	4832	Sisma Y SLV	0	38.2	0	0	2.3E2	0.993
16417	4832	Sisma X SLD	37.6	0	0	0	2.3E2	0.993	16418	4832	Sisma Y SLD	0	37.6	0	0	2.3E2	0.993
16419	4833	Sisma X SLV	38.2	0	0	0	2.3E2	0.993	16420	4833	Sisma Y SLV	0	38.2	0	0	2.3E2	0.993
16421	4833	Sisma X SLD	37.6	0	0	0	2.3E2	0.993	16422	4833	Sisma Y SLD	0	37.6	0	0	2.3E2	0.993
16423	4834	Sisma X SLV	38.1	0	0	0	2.2E2	0.993	16424	4834	Sisma Y SLV	0	38.1	0	0	2.2E2	0.993
16425	4834	Sisma X SLD	37.5	0	0	0	2.2E2	0.993	16426	4834	Sisma Y SLD	0	37.5	0	0	2.2E2	0.993
16427	4835	Sisma X SLV	38.2	0	0	0	2.3E2	0.993	16428	4835	Sisma Y SLV	0	38.2	0	0	2.3E2	0.993
16429	4835	Sisma X SLD	37.5	0	0	0	2.3E2	0.993	16430	4835	Sisma Y SLD	0	37.5	0	0	2.3E2	0.993
16431	4836	Sisma X SLV	38.1	0	0	0	2.3E2	0.993	16432	4836	Sisma Y SLV	0	38.1	0	0	2.3E2	0.993
16433	4836	Sisma X SLD	37.5	0	0	0	2.3E2	0.993	16434	4836	Sisma Y SLD	0	37.5	0	0	2.3E2	0.993
16435	4837	Sisma X SLV	38.5	0	0	0	2.3E2	0.993	16436	4837	Sisma Y SLV	0	38.5	0	0	2.3E2	0.993
16437	4837	Sisma X SLD	37.8	0	0	0	2.3E2	0.993	16438	4837	Sisma Y SLD	0	37.8	0	0	2.3E2	0.993
16439	4838	Sisma X SLV	37.9	0	0	0	2.2E2	0.993	16440	4838	Sisma Y SLV	0	37.9	0	0	2.2E2	0.993
16441	4838	Sisma X SLD	37.3	0	0	0	2.2E2	0.993	16442	4838	Sisma Y SLD	0	37.3	0	0	2.2E2	0.993
16443	4839	Sisma X SLV	38	0	0	0	2.2E2	0.993	16444	4839	Sisma Y SLV	0	38	0	0	2.2E2	0.993
16445	4839	Sisma X SLD	37.4	0	0	0	2.2E2	0.993	16446	4839	Sisma Y SLD	0	37.4	0	0	2.2E2	0.993
16447	4840	Sisma X SLV	39.1	0	0	0	2.3E2	0.993	16448	4840	Sisma Y SLV	0	39.1	0	0	2.3E2	0.993
16449	4840	Sisma X SLD	38.4	0	0	0	2.3E2	0.993	16450	4840	Sisma Y SLD	0	38.4	0	0	2.3E2	0.993
16451	4841	Sisma X SLV	24.1	0	0	0	142.33	0.993	16452	4841	Sisma Y SLV	0	24.1	0	0	142.33	0.993
16453	4841	Sisma X SLD	23.7	0	0	0	142.33	0.993	16454	4841	Sisma Y SLD	0	23.7	0	0	142.33	0.993
16455	4842	Sisma X SLV	37.5	0	0	0	2.2E2	0.993	16456	4842	Sisma Y SLV	0	37.5	0	0	2.2E2	0.993
16457	4842	Sisma X SLD	36.9	0	0	0	2.2E2	0.993	16458	4842	Sisma Y SLD	0	36.9	0	0	2.2E2	0.993
16459	4843	Sisma X SLV	39	0	0	0	230.23	0.993	16460	4843	Sisma Y SLV	0	39	0	0	230.23	0.993
16461	4843	Sisma X SLD	38.4	0	0	0	230.23	0.993	16462	4843	Sisma Y SLD	0	38.4	0	0	230.23	0.993
16463	4844	Sisma X SLV	39.4	0	0	0	2.3E2	0.993	16464	4844	Sisma Y SLV	0	39.4	0	0	2.3E2	0.993
16465	4844	Sisma X SLD	38.8	0	0	0	2.3E2	0.993	16466	4844	Sisma Y SLD	0	38.8	0	0	2.3E2	0.993
16467	4845	Sisma X SLV	24.1	0	0	0	1.4E2	0.993	16468	4845	Sisma Y SLV	0	24.1	0	0	1.4E2	0.993
16469	4845	Sisma X SLD	23.7	0	0	0	1.4E2	0.993	16470	4845	Sisma Y SLD	0	23.7	0	0	1.4E2	0.993
16471	4846	Sisma X SLV	39.5	0	0	0	2.3E2	0.993	16472	4846	Sisma Y SLV	0	39.5	0	0	2.3E2	0.993
16473	4846	Sisma X SLD	38.9	0	0	0	2.3E2	0.993	16474	4846	Sisma Y SLD	0	38.9	0	0	2.3E2	0.993
16475	4847	Sisma X SLV	37.3	0	0	0	2.2E2	0.993	16476	4847	Sisma Y SLV	0	37.3	0	0	2.2E2	0.993
16477	4847	Sisma X SLD	36.7	0	0	0	2.2E2	0.993	16478	4847	Sisma Y SLD	0	36.7	0	0	2.2E2	0.993
16479	4848	Sisma X SLV	37	0	0	0	218.04	0.993	16480	4848	Sisma Y SLV	0	37	0	0	218.04	0.993
16481	4848	Sisma X SLD	36.4	0	0	0	218.04	0.993	16482	4848	Sisma Y SLD	0	36.4	0	0	218.04	0.993
16483	4849	Sisma X SLV	37.9	0	0	0	2.2E2	0.993	16484	4849	Sisma Y SLV	0	37.9	0	0	2.2E2	0.993
16485	4849	Sisma X SLD	37.3	0	0	0	2.2E2	0.993	16486	4849	Sisma Y SLD	0	37.3	0	0	2.2E2	0.993
16487	4850	Sisma X SLV	40.3	0	0	0	2.4E2	0.993	16488	4850	Sisma Y SLV	0	40.3	0	0	2.4E2	0.993
16489	4850	Sisma X SLD	39.7	0	0	0	2.4E2	0.993	16490	4850	Sisma Y SLD	0	39.7	0	0	2.4E2	0.993
16491	4851	Sisma X SLV	37.5	0	0	0	2.2E2	0.993	16492	4851	Sisma Y SLV	0	37.5	0	0	2.2E2	0.993
16493	4851	Sisma X SLD	36.9	0	0	0	2.2E2	0.993	16494	4851	Sisma Y SLD	0	36.9	0	0	2.2E2	0.993
16495	4852	Sisma X SLV	24.1	0	0	0	1.4E2	0.993	16496	4852	Sisma Y SLV	0	24.1	0	0	1.4E2	0.993

Indice	Nodo	Condizione	Fx	Fy	Fz	Mz	Peso	Gamma	Indice	Nodo	Condizione	Fx	Fy	Fz	Mz	Peso	Gamma
16497	4852	Sisma X SLD	23.8	0	0	0	1.4E2	0.993	16498	4852	Sisma Y SLD	0	23.8	0	0	1.4E2	0.993
16499	4853	Sisma X SLV	40	0	0	0	2.4E2	0.993	16500	4853	Sisma Y SLV	0	40	0	0	2.4E2	0.993
16501	4853	Sisma X SLD	39.4	0	0	0	2.4E2	0.993	16502	4853	Sisma Y SLD	0	39.4	0	0	2.4E2	0.993
16503	4854	Sisma X SLV	39.1	0	0	0	2.3E2	0.993	16504	4854	Sisma Y SLV	0	39.1	0	0	2.3E2	0.993
16505	4854	Sisma X SLD	38.5	0	0	0	2.3E2	0.993	16506	4854	Sisma Y SLD	0	38.5	0	0	2.3E2	0.993
16507	4855	Sisma X SLV	24.1	0	0	0	1.4E2	0.993	16508	4855	Sisma Y SLV	0	24.1	0	0	1.4E2	0.993
16509	4855	Sisma X SLD	23.8	0	0	0	1.4E2	0.993	16510	4855	Sisma Y SLD	0	23.8	0	0	1.4E2	0.993
16511	4856	Sisma X SLV	32.5	0	0	0	1.9E2	0.993	16512	4856	Sisma Y SLV	0	32.5	0	0	1.9E2	0.993
16513	4856	Sisma X SLD	31.9	0	0	0	1.9E2	0.993	16514	4856	Sisma Y SLD	0	31.9	0	0	1.9E2	0.993
16515	4857	Sisma X SLV	36.5	0	0	0	2.2E2	0.993	16516	4857	Sisma Y SLV	0	36.5	0	0	2.2E2	0.993
16517	4857	Sisma X SLD	36	0	0	0	2.2E2	0.993	16518	4857	Sisma Y SLD	0	36	0	0	2.2E2	0.993
16519	4858	Sisma X SLV	41.2	0	0	0	243	0.993	16520	4858	Sisma Y SLV	0	41.2	0	0	243	0.993
16521	4858	Sisma X SLD	40.5	0	0	0	243	0.993	16522	4858	Sisma Y SLD	0	40.5	0	0	243	0.993
16523	4859	Sisma X SLV	24.2	0	0	0	1.4E2	0.993	16524	4859	Sisma Y SLV	0	24.2	0	0	1.4E2	0.993
16525	4859	Sisma X SLD	23.8	0	0	0	1.4E2	0.993	16526	4859	Sisma Y SLD	0	23.8	0	0	1.4E2	0.993
16527	4860	Sisma X SLV	41.9	0	0	0	2.5E2	0.993	16528	4860	Sisma Y SLV	0	41.9	0	0	2.5E2	0.993
16529	4860	Sisma X SLD	41.2	0	0	0	2.5E2	0.993	16530	4860	Sisma Y SLD	0	41.2	0	0	2.5E2	0.993
16531	4861	Sisma X SLV	41.9	0	0	0	2.5E2	0.993	16532	4861	Sisma Y SLV	0	41.9	0	0	2.5E2	0.993
16533	4861	Sisma X SLD	41.2	0	0	0	2.5E2	0.993	16534	4861	Sisma Y SLD	0	41.2	0	0	2.5E2	0.993
16535	4862	Sisma X SLV	38.5	0	0	0	2.3E2	0.993	16536	4862	Sisma Y SLV	0	38.5	0	0	2.3E2	0.993
16537	4862	Sisma X SLD	37.9	0	0	0	2.3E2	0.993	16538	4862	Sisma Y SLD	0	37.9	0	0	2.3E2	0.993
16539	4863	Sisma X SLV	38.9	0	0	0	2.3E2	0.993	16540	4863	Sisma Y SLV	0	38.9	0	0	2.3E2	0.993
16541	4863	Sisma X SLD	38.3	0	0	0	2.3E2	0.993	16542	4863	Sisma Y SLD	0	38.3	0	0	2.3E2	0.993
16543	4864	Sisma X SLV	36.6	0	0	0	2.2E2	0.993	16544	4864	Sisma Y SLV	0	36.6	0	0	2.2E2	0.993
16545	4864	Sisma X SLD	36	0	0	0	2.2E2	0.993	16546	4864	Sisma Y SLD	0	36	0	0	2.2E2	0.993
16547	4865	Sisma X SLV	37.8	0	0	0	2.2E2	0.993	16548	4865	Sisma Y SLV	0	37.8	0	0	2.2E2	0.993
16549	4865	Sisma X SLD	37.2	0	0	0	2.2E2	0.993	16550	4865	Sisma Y SLD	0	37.2	0	0	2.2E2	0.993
16551	4866	Sisma X SLV	24.2	0	0	0	1.4E2	0.993	16552	4866	Sisma Y SLV	0	24.2	0	0	1.4E2	0.993
16553	4866	Sisma X SLD	23.8	0	0	0	1.4E2	0.993	16554	4866	Sisma Y SLD	0	23.8	0	0	1.4E2	0.993
16555	4867	Sisma X SLV	36.2	0	0	0	213.5	0.993	16556	4867	Sisma Y SLV	0	36.2	0	0	213.5	0.993
16557	4867	Sisma X SLD	35.6	0	0	0	213.5	0.993	16558	4867	Sisma Y SLD	0	35.6	0	0	213.5	0.993
16559	4868	Sisma X SLV	35.7	0	0	0	210.66	0.993	16560	4868	Sisma Y SLV	0	35.7	0	0	210.66	0.993
16561	4868	Sisma X SLD	35.1	0	0	0	210.66	0.993	16562	4868	Sisma Y SLD	0	35.1	0	0	210.66	0.993
16563	4869	Sisma X SLV	42	0	0	0	2.5E2	0.993	16564	4869	Sisma Y SLV	0	42	0	0	2.5E2	0.993
16565	4869	Sisma X SLD	41.3	0	0	0	2.5E2	0.993	16566	4869	Sisma Y SLD	0	41.3	0	0	2.5E2	0.993
16567	4870	Sisma X SLV	41.3	0	0	0	2.4E2	0.993	16568	4870	Sisma Y SLV	0	41.3	0	0	2.4E2	0.993
16569	4870	Sisma X SLD	40.6	0	0	0	2.4E2	0.993	16570	4870	Sisma Y SLD	0	40.6	0	0	2.4E2	0.993
16571	4871	Sisma X SLV	24.2	0	0	0	1.4E2	0.993	16572	4871	Sisma Y SLV	0	24.2	0	0	1.4E2	0.993
16573	4871	Sisma X SLD	23.8	0	0	0	1.4E2	0.993	16574	4871	Sisma Y SLD	0	23.8	0	0	1.4E2	0.993
16575	4872	Sisma X SLV	37.8	0	0	0	222.92	0.993	16576	4872	Sisma Y SLV	0	37.8	0	0	222.92	0.993
16577	4872	Sisma X SLD	37.2	0	0	0	222.92	0.993	16578	4872	Sisma Y SLD	0	37.2	0	0	222.92	0.993
16579	4873	Sisma X SLV	39.1	0	0	0	2.3E2	0.993	16580	4873	Sisma Y SLV	0	39.1	0	0	2.3E2	0.993
16581	4873	Sisma X SLD	38.4	0	0	0	2.3E2	0.993	16582	4873	Sisma Y SLD	0	38.4	0	0	2.3E2	0.993
16583	4874	Sisma X SLV	24.2	0	0	0	1.4E2	0.993	16584	4874	Sisma Y SLV	0	24.2	0	0	1.4E2	0.993
16585	4874	Sisma X SLD	23.8	0	0	0	1.4E2	0.993	16586	4874	Sisma Y SLD	0	23.8	0	0	1.4E2	0.993
16587	4875	Sisma X SLV	31.3	0	0	0	1.8E2	0.993	16588	4875	Sisma Y SLV	0	31.3	0	0	1.8E2	0.993
16589	4875	Sisma X SLD	30.8	0	0	0	1.8E2	0.993	16590	4875	Sisma Y SLD	0	30.8	0	0	1.8E2	0.993
16591	4876	Sisma X SLV	36.1	0	0	0	2.1E2	0.993	16592	4876	Sisma Y SLV	0	36.1	0	0	2.1E2	0.993
16593	4876	Sisma X SLD	35.5	0	0	0	2.1E2	0.993	16594	4876	Sisma Y SLD	0	35.5	0	0	2.1E2	0.993
16595	4877	Sisma X SLV	24.2	0	0	0	1.4E2	0.994	16596	4877	Sisma Y SLV	0	24.2	0	0	1.4E2	0.994
16597	4877	Sisma X SLD	23.9	0	0	0	1.4E2	0.994	16598	4877	Sisma Y SLD	0	23.9	0	0	1.4E2	0.994
16599	4878	Sisma X SLV	40.1	0	0	0	236.81	0.994	16600	4878	Sisma Y SLV	0	40.1	0	0	236.81	0.994
16601	4878	Sisma X SLD	39.5	0	0	0	236.81	0.994	16602	4878	Sisma Y SLD	0	39.5	0	0	236.81	0.994
16603	4879	Sisma X SLV	40.8	0	0	0	240.89	0.994	16604	4879	Sisma Y SLV	0	40.8	0	0	240.89	0.994
16605	4879	Sisma X SLD	40.2	0	0	0	240.89	0.994	16606	4879	Sisma Y SLD	0	40.2	0	0	240.89	0.994
16607	4880	Sisma X SLV	39.4	0	0	0	2.3E2	0.994	16608	4880	Sisma Y SLV	0	39.4	0	0	2.3E2	0.994
16609	4880	Sisma X SLD	38.8	0	0	0	2.3E2	0.994	16610	4880	Sisma Y SLD	0	38.8	0	0	2.3E2	0.994
16611	4881	Sisma X SLV	35.9	0	0	0	212.04	0.994	16612	4881	Sisma Y SLV	0	35.9	0	0	212.04	0.994
16613	4881	Sisma X SLD	35.4	0	0	0	212.04	0.994	16614	4881	Sisma Y SLD	0	35.4	0	0	212.04	0.994
16615	4882	Sisma X SLV	38.1	0	0	0	2.2E2	0.994	16616	4882	Sisma Y SLV	0	38.1	0	0	2.2E2	0.994
16617	4882	Sisma X SLD	37.5	0	0	0	2.2E2	0.994	16618	4882	Sisma Y SLD	0	37.5	0	0	2.2E2	0.994
16619	4883	Sisma X SLV	37	0	0	0	2.2E2	0.994	16620	4883	Sisma Y SLV	0	37	0	0	2.2E2	0.994
16621	4883	Sisma X SLD	36.4	0	0	0	2.2E2	0.994	16622	4883	Sisma Y SLD	0	36.4	0	0	2.2E2	0.994
16623	4884	Sisma X SLV	41	0	0	0	2.4E2	0.994	16624	4884	Sisma Y SLV	0	41	0	0	2.4E2	0.994
16625	4884	Sisma X SLD	40.4	0	0	0	2.4E2	0.994	16626	4884	Sisma Y SLD	0	40.4	0	0	2.4E2	0.994
16627	4885	Sisma X SLV	40.8	0	0	0	2.4E2	0.994	16628	4885	Sisma Y SLV	0	40.8	0	0	2.4E2	0.994
16629	4885	Sisma X SLD	40.2	0	0	0	2.4E2	0.994	16630	4885	Sisma Y SLD	0	40.2	0	0	2.4E2	0.994
16631	4886	Sisma X SLV	36.2	0	0	0	213.42	0.994	16632	4886	Sisma Y SLV	0	36.2	0	0	213.42	0.994
16633	4886	Sisma X SLD	35.6	0	0	0	213.42	0.994	16634	4886	Sisma Y SLD	0	35.6	0	0	213.42	0.994
16635	4887	Sisma X SLV	24.4	0	0	0	1.4E2	0.994	16636	4887	Sisma Y SLV	0	24.4	0	0	1.4E2	0.994
16637	4887	Sisma X SLD	24	0	0	0	1.4E2	0.994	16638	4887	Sisma Y SLD	0	24	0	0	1.4E2	0.994
16639	4888	Sisma X SLV	40.6	0	0	0	2.4E2	0.994	16640	4888	Sisma Y SLV	0	40.6	0	0	2.4E2	0.994
16641	4888	Sisma X SLD	39.9	0	0	0	2.4E2	0.994	16642	4888	Sisma Y SLD	0	39.9	0	0	2.4E2	0.994
16643	4889	Sisma X SLV	42.6	0	0	0	2.5E2	0.994	16644	4889	Sisma Y SLV	0	42.6	0	0	2.5E2	0.994
16645	4889	Sisma X SLD	41.9	0	0	0	2.5E2	0.994	16646	4889	Sisma Y SLD	0	41.9	0	0	2.5E2	0.994
16647	4890	Sisma X SLV	40.1	0	0	0	2.4E2	0.994	16648	4890	Sisma Y SLV	0	40.1	0	0	2.4E2	0.994
16649	4890	Sisma X SLD	39.5	0	0	0	2.4E2	0.994	16650	4890	Sisma Y SLD	0	39.5	0	0	2.4E2	0.994
16651	4891	Sisma X SLV	39.4	0	0	0	2.3E2	0.994	16652	4891	Sisma Y SLV	0	39.4	0	0	2.3E2	0.994
16653	4891	Sisma X SLD	38.7	0	0	0	2.3E2	0.994	16654	4891	Sisma Y SLD	0	38.7	0	0	2.3E2	0.994
16655	4892	Sisma X SLV	39	0	0	0	2.3E2	0.994	16656	4892	Sisma Y SLV	0	39	0	0	2.3E2	0.994
16657	4892	Sisma X SLD	38.4	0	0	0	2.3E2	0.994	16658	4892	Sisma Y SLD	0	38.4	0	0	2.3E2	0.994
16659	4893	Sisma X SLV	41.2	0	0	0	2.4E2	0.994	16660	4893	Sisma Y SLV	0	41.2	0	0	2.4E2	0.994
16661	4893	Sisma X SLD	40.5	0	0	0	2.4E2	0.994	16662	4893	Sisma Y SLD	0	40.5	0	0	2.4E2	0.994
16663	4894	Sisma X SLV	41.2	0	0	0	2.4E2	0.994	16664	4894	Sisma Y SLV	0	41.2	0	0	2.4E2	0.994
16665	4894	Sisma X SLD	40.6	0	0	0	2.4E2	0.994	16666	4894	Sisma Y SLD	0	40.6	0	0	2.4E2	0.994
16667	4895	Sisma X SLV	38.7	0	0	0	2.3E2	0.994	16668	4895	Sisma Y SLV	0	38.7	0	0	2.3E2	0.994
16669	4895	Sisma X SLD	38	0	0	0	2.3E2	0.994	16670	4895	Sisma Y SLD	0	38	0	0	2.3E2	0.994
16671	4896	Sisma X SLV	37.1	0	0	0	2.2E2	0.994	16672	4896	Sisma Y SLV	0	37.1	0	0	2.2E2	0.994
16673	4896	Sisma X SLD	36.5	0	0	0	2.2E2	0.994	16674	4896	Sisma Y SLD	0	36.5	0	0	2.2E2	0.994
16675	4897	Sisma X SLV	38.3	0	0	0	2.3E2	0.994	16676	4897	Sisma Y SLV	0	38.3	0	0	2.3E2	0.994
16677	4897	Sisma X SLD	37.7	0	0	0	2.3E2	0.994	16678	4897	Sisma Y SLD	0	37.7	0	0	2.3E2	0.994
16679	4898	Sisma X SLV	39.1	0	0	0	2.3E2	0.994	16680	4898	Sisma Y SLV	0	39.1	0	0	2.3E2	0.994
16681	4898	Sisma X SLD	38.5	0	0	0	2.3E2	0.994	16682	4898	Sisma Y SLD	0	38.5	0	0	2.3E2	0.994
16683	4899	Sisma X SLV	40.8	0	0	0	2.4E2	0.994	16684	4899	Sisma Y SLV	0	40.8	0	0	2.4E2	0.994
16685	4899	Sisma X SLD	40.1	0	0	0	2.4E2	0.994	16686	4899	Sisma Y SLD	0	40.1	0	0	2.4E2	0.994
16687	4900	Sisma X SLV	40.8	0	0	0	2.4E2	0.994	16688	4900	Sisma Y SLV	0	40.8	0	0	2.4E2	0.994
16689	4900	Sisma X SLD	40.2	0	0	0	2.4E2	0.994	16690	4900	Sisma Y SLD	0	40.2	0	0	2.4E2	0.994
16691	4901	Sisma X SLV	37.1	0	0	0	2.2E2	0.994	16692	4901	Sisma Y SLV	0	37.1	0	0	2.2E2	0.994
16693	4901	Sisma X SLD	36.5	0	0	0	2.2E2	0.994	16694	4901	Sisma Y SLD	0	36.5	0	0	2.2E2	0.994
16695	4902	Sisma X SLV	41.6	0	0	0	2.5E2	0.994	16696	4902	Sisma Y SLV	0	41.6	0	0	2.5E2	0.994
16697	4902	Sisma X SLD	41	0	0	0	2.5E2	0.994	16698	4902	Sisma Y SLD	0	41	0	0	2.5E2	0.994
16699	4903	Sisma X SLV	41.8	0	0	0	246.41	0.994	16700	4903	Sisma Y SLV	0	41.8	0	0	246.41	0.994
16701	4903	Sisma X SLD	41.1	0	0	0	246.41	0.994	16702	4903	Sisma Y SLD	0	41.1	0	0	246.41	0.994
16703	4904	Sisma X SLV	24.7	0	0	0	1.5E2	0.994	16704	4904	Sisma Y SLV	0	24.7	0	0	1.5E2	0.994

Indice	Nodo	Condizione	Fx	Fy	Fz	Mz	Peso	Gamma	Indice	Nodo	Condizione	Fx	Fy	Fz	Mz	Peso	Gamma
16705	4904	Sisma X SLD	24.3	0	0	0	1.5E2	0.994	16706	4904	Sisma Y SLD	0	24.3	0	0	1.5E2	0.994
16707	4905	Sisma X SLV	38.7	0	0	0	2.3E2	0.994	16708	4905	Sisma Y SLV	0	38.7	0	0	2.3E2	0.994
16709	4905	Sisma X SLD	38.1	0	0	0	2.3E2	0.994	16710	4905	Sisma Y SLD	0	38.1	0	0	2.3E2	0.994
16711	4906	Sisma X SLV	39.2	0	0	0	2.3E2	0.994	16712	4906	Sisma Y SLV	0	39.2	0	0	2.3E2	0.994
16713	4906	Sisma X SLD	38.6	0	0	0	2.3E2	0.994	16714	4906	Sisma Y SLD	0	38.6	0	0	2.3E2	0.994
16715	4907	Sisma X SLV	37.7	0	0	0	2.2E2	0.994	16716	4907	Sisma Y SLV	0	37.7	0	0	2.2E2	0.994
16717	4907	Sisma X SLD	37.1	0	0	0	2.2E2	0.994	16718	4907	Sisma Y SLD	0	37.1	0	0	2.2E2	0.994
16719	4908	Sisma X SLV	38.1	0	0	0	2.2E2	0.994	16720	4908	Sisma Y SLV	0	38.1	0	0	2.2E2	0.994
16721	4908	Sisma X SLD	37.5	0	0	0	2.2E2	0.994	16722	4908	Sisma Y SLD	0	37.5	0	0	2.2E2	0.994
16723	4909	Sisma X SLV	36.3	0	0	0	2.1E2	0.994	16724	4909	Sisma Y SLV	0	36.3	0	0	2.1E2	0.994
16725	4909	Sisma X SLD	35.7	0	0	0	2.1E2	0.994	16726	4909	Sisma Y SLD	0	35.7	0	0	2.1E2	0.994
16727	4910	Sisma X SLV	40.3	0	0	0	237.59	0.994	16728	4910	Sisma Y SLV	0	40.3	0	0	237.59	0.994
16729	4910	Sisma X SLD	39.6	0	0	0	237.59	0.994	16730	4910	Sisma Y SLD	0	39.6	0	0	237.59	0.994
16731	4911	Sisma X SLV	40.1	0	0	0	2.4E2	0.994	16732	4911	Sisma Y SLV	0	40.1	0	0	2.4E2	0.994
16733	4911	Sisma X SLD	39.5	0	0	0	2.4E2	0.994	16734	4911	Sisma Y SLD	0	39.5	0	0	2.4E2	0.994
16735	4912	Sisma X SLV	39.7	0	0	0	2.3E2	0.994	16736	4912	Sisma Y SLV	0	39.7	0	0	2.3E2	0.994
16737	4912	Sisma X SLD	39.1	0	0	0	2.3E2	0.994	16738	4912	Sisma Y SLD	0	39.1	0	0	2.3E2	0.994
16739	4913	Sisma X SLV	38.6	0	0	0	2.3E2	0.994	16740	4913	Sisma Y SLV	0	38.6	0	0	2.3E2	0.994
16741	4913	Sisma X SLD	37.9	0	0	0	2.3E2	0.994	16742	4913	Sisma Y SLD	0	37.9	0	0	2.3E2	0.994
16743	4914	Sisma X SLV	40.5	0	0	0	2.4E2	0.994	16744	4914	Sisma Y SLV	0	40.5	0	0	2.4E2	0.994
16745	4914	Sisma X SLD	39.9	0	0	0	2.4E2	0.994	16746	4914	Sisma Y SLD	0	39.9	0	0	2.4E2	0.994
16747	4915	Sisma X SLV	40.6	0	0	0	2.4E2	0.994	16748	4915	Sisma Y SLV	0	40.6	0	0	2.4E2	0.994
16749	4915	Sisma X SLD	39.9	0	0	0	2.4E2	0.994	16750	4915	Sisma Y SLD	0	39.9	0	0	2.4E2	0.994
16751	4916	Sisma X SLV	36.9	0	0	0	2.2E2	0.994	16752	4916	Sisma Y SLV	0	36.9	0	0	2.2E2	0.994
16753	4916	Sisma X SLD	36.4	0	0	0	2.2E2	0.994	16754	4916	Sisma Y SLD	0	36.4	0	0	2.2E2	0.994
16755	4917	Sisma X SLV	41.1	0	0	0	2.4E2	0.994	16756	4917	Sisma Y SLV	0	41.1	0	0	2.4E2	0.994
16757	4917	Sisma X SLD	40.5	0	0	0	2.4E2	0.994	16758	4917	Sisma Y SLD	0	40.5	0	0	2.4E2	0.994
16759	4918	Sisma X SLV	41.4	0	0	0	2.4E2	0.994	16760	4918	Sisma Y SLV	0	41.4	0	0	2.4E2	0.994
16761	4918	Sisma X SLD	40.8	0	0	0	2.4E2	0.994	16762	4918	Sisma Y SLD	0	40.8	0	0	2.4E2	0.994
16763	4919	Sisma X SLV	40.2	0	0	0	2.4E2	0.994	16764	4919	Sisma Y SLV	0	40.2	0	0	2.4E2	0.994
16765	4919	Sisma X SLD	39.6	0	0	0	2.4E2	0.994	16766	4919	Sisma Y SLD	0	39.6	0	0	2.4E2	0.994
16767	4920	Sisma X SLV	40	0	0	0	2.4E2	0.994	16768	4920	Sisma Y SLV	0	40	0	0	2.4E2	0.994
16769	4920	Sisma X SLD	39.4	0	0	0	2.4E2	0.994	16770	4920	Sisma Y SLD	0	39.4	0	0	2.4E2	0.994
16771	4921	Sisma X SLV	25.1	0	0	0	1.5E2	0.994	16772	4921	Sisma Y SLV	0	25.1	0	0	1.5E2	0.994
16773	4921	Sisma X SLD	24.7	0	0	0	1.5E2	0.994	16774	4921	Sisma Y SLD	0	24.7	0	0	1.5E2	0.994
16775	4922	Sisma X SLV	37.9	0	0	0	2.2E2	0.994	16776	4922	Sisma Y SLV	0	37.9	0	0	2.2E2	0.994
16777	4922	Sisma X SLD	37.3	0	0	0	2.2E2	0.994	16778	4922	Sisma Y SLD	0	37.3	0	0	2.2E2	0.994
16779	4923	Sisma X SLV	40.6	0	0	0	2.4E2	0.994	16780	4923	Sisma Y SLV	0	40.6	0	0	2.4E2	0.994
16781	4923	Sisma X SLD	39.9	0	0	0	2.4E2	0.994	16782	4923	Sisma Y SLD	0	39.9	0	0	2.4E2	0.994
16783	4924	Sisma X SLV	43.4	0	0	0	2.6E2	0.994	16784	4924	Sisma Y SLV	0	43.4	0	0	2.6E2	0.994
16785	4924	Sisma X SLD	42.7	0	0	0	2.6E2	0.994	16786	4924	Sisma Y SLD	0	42.7	0	0	2.6E2	0.994
16787	4925	Sisma X SLV	40.4	0	0	0	2.4E2	0.994	16788	4925	Sisma Y SLV	0	40.4	0	0	2.4E2	0.994
16789	4925	Sisma X SLD	39.8	0	0	0	2.4E2	0.994	16790	4925	Sisma Y SLD	0	39.8	0	0	2.4E2	0.994
16791	4926	Sisma X SLV	40.5	0	0	0	2.4E2	0.994	16792	4926	Sisma Y SLV	0	40.5	0	0	2.4E2	0.994
16793	4926	Sisma X SLD	39.8	0	0	0	2.4E2	0.994	16794	4926	Sisma Y SLD	0	39.8	0	0	2.4E2	0.994
16795	4927	Sisma X SLV	42.1	0	0	0	2.5E2	0.994	16796	4927	Sisma Y SLV	0	42.1	0	0	2.5E2	0.994
16797	4927	Sisma X SLD	41.5	0	0	0	2.5E2	0.994	16798	4927	Sisma Y SLD	0	41.5	0	0	2.5E2	0.994
16799	4928	Sisma X SLV	37.9	0	0	0	2.2E2	0.994	16800	4928	Sisma Y SLV	0	37.9	0	0	2.2E2	0.994
16801	4928	Sisma X SLD	37.3	0	0	0	2.2E2	0.994	16802	4928	Sisma Y SLD	0	37.3	0	0	2.2E2	0.994
16803	4929	Sisma X SLV	38.4	0	0	0	2.3E2	0.994	16804	4929	Sisma Y SLV	0	38.4	0	0	2.3E2	0.994
16805	4929	Sisma X SLD	37.8	0	0	0	2.3E2	0.994	16806	4929	Sisma Y SLD	0	37.8	0	0	2.3E2	0.994
16807	4930	Sisma X SLV	25.6	0	0	0	151.02	0.994	16808	4930	Sisma Y SLV	0	25.6	0	0	151.02	0.994
16809	4930	Sisma X SLD	25.2	0	0	0	151.02	0.994	16810	4930	Sisma Y SLD	0	25.2	0	0	151.02	0.994
16811	4931	Sisma X SLV	38.2	0	0	0	2.3E2	0.994	16812	4931	Sisma Y SLV	0	38.2	0	0	2.3E2	0.994
16813	4931	Sisma X SLD	37.6	0	0	0	2.3E2	0.994	16814	4931	Sisma Y SLD	0	37.6	0	0	2.3E2	0.994
16815	4932	Sisma X SLV	42.7	0	0	0	2.5E2	0.994	16816	4932	Sisma Y SLV	0	42.7	0	0	2.5E2	0.994
16817	4932	Sisma X SLD	42	0	0	0	2.5E2	0.994	16818	4932	Sisma Y SLD	0	42	0	0	2.5E2	0.994
16819	4933	Sisma X SLV	43.1	0	0	0	2.5E2	0.994	16820	4933	Sisma Y SLV	0	43.1	0	0	2.5E2	0.994
16821	4933	Sisma X SLD	42.4	0	0	0	2.5E2	0.994	16822	4933	Sisma Y SLD	0	42.4	0	0	2.5E2	0.994
16823	4934	Sisma X SLV	38.3	0	0	0	2.3E2	0.994	16824	4934	Sisma Y SLV	0	38.3	0	0	2.3E2	0.994
16825	4934	Sisma X SLD	37.7	0	0	0	2.3E2	0.994	16826	4934	Sisma Y SLD	0	37.7	0	0	2.3E2	0.994
16827	4935	Sisma X SLV	42.4	0	0	0	2.5E2	0.994	16828	4935	Sisma Y SLV	0	42.4	0	0	2.5E2	0.994
16829	4935	Sisma X SLD	41.7	0	0	0	2.5E2	0.994	16830	4935	Sisma Y SLD	0	41.7	0	0	2.5E2	0.994
16831	4936	Sisma X SLV	43.9	0	0	0	2.6E2	0.994	16832	4936	Sisma Y SLV	0	43.9	0	0	2.6E2	0.994
16833	4936	Sisma X SLD	43.2	0	0	0	2.6E2	0.994	16834	4936	Sisma Y SLD	0	43.2	0	0	2.6E2	0.994
16835	4937	Sisma X SLV	43.4	0	0	0	255.73	0.994	16836	4937	Sisma Y SLV	0	43.4	0	0	255.73	0.994
16837	4937	Sisma X SLD	42.7	0	0	0	255.73	0.994	16838	4937	Sisma Y SLD	0	42.7	0	0	255.73	0.994
16839	4938	Sisma X SLV	37.5	0	0	0	2.2E2	0.994	16840	4938	Sisma Y SLV	0	37.5	0	0	2.2E2	0.994
16841	4938	Sisma X SLD	36.9	0	0	0	2.2E2	0.994	16842	4938	Sisma Y SLD	0	36.9	0	0	2.2E2	0.994
16843	4939	Sisma X SLV	42.1	0	0	0	2.5E2	0.994	16844	4939	Sisma Y SLV	0	42.1	0	0	2.5E2	0.994
16845	4939	Sisma X SLD	41.5	0	0	0	2.5E2	0.994	16846	4939	Sisma Y SLD	0	41.5	0	0	2.5E2	0.994
16847	4940	Sisma X SLV	36.4	0	0	0	2.1E2	0.994	16848	4940	Sisma Y SLV	0	36.4	0	0	2.1E2	0.994
16849	4940	Sisma X SLD	35.8	0	0	0	2.1E2	0.994	16850	4940	Sisma Y SLD	0	35.8	0	0	2.1E2	0.994
16851	4941	Sisma X SLV	45.2	0	0	0	2.7E2	0.994	16852	4941	Sisma Y SLV	0	45.2	0	0	2.7E2	0.994
16853	4941	Sisma X SLD	44.5	0	0	0	2.7E2	0.994	16854	4941	Sisma Y SLD	0	44.5	0	0	2.7E2	0.994
16855	4942	Sisma X SLV	35.9	0	0	0	2.1E2	0.994	16856	4942	Sisma Y SLV	0	35.9	0	0	2.1E2	0.994
16857	4942	Sisma X SLD	35.3	0	0	0	2.1E2	0.994	16858	4942	Sisma Y SLD	0	35.3	0	0	2.1E2	0.994
16859	4943	Sisma X SLV	41.5	0	0	0	2.4E2	0.994	16860	4943	Sisma Y SLV	0	41.5	0	0	2.4E2	0.994
16861	4943	Sisma X SLD	40.9	0	0	0	2.4E2	0.994	16862	4943	Sisma Y SLD	0	40.9	0	0	2.4E2	0.994
16863	4944	Sisma X SLV	39.3	0	0	0	2.3E2	0.994	16864	4944	Sisma Y SLV	0	39.3	0	0	2.3E2	0.994
16865	4944	Sisma X SLD	38.6	0	0	0	2.3E2	0.994	16866	4944	Sisma Y SLD	0	38.6	0	0	2.3E2	0.994
16867	4945	Sisma X SLV	48	0	0	0	2.8E2	0.994	16868	4945	Sisma Y SLV	0	48	0	0	2.8E2	0.994
16869	4945	Sisma X SLD	47.3	0	0	0	2.8E2	0.994	16870	4945	Sisma Y SLD	0	47.3	0	0	2.8E2	0.994
16871	4946	Sisma X SLV	43.8	0	0	0	2.6E2	0.994	16872	4946	Sisma Y SLV	0	43.8	0	0	2.6E2	0.994
16873	4946	Sisma X SLD	43.1	0	0	0	2.6E2	0.994	16874	4946	Sisma Y SLD	0	43.1	0	0	2.6E2	0.994
16875	4947	Sisma X SLV	39.1	0	0	0	2.3E2	0.994	16876	4947	Sisma Y SLV	0	39.1	0	0	2.3E2	0.994
16877	4947	Sisma X SLD	38.5	0	0	0	2.3E2	0.994	16878	4947	Sisma Y SLD	0	38.5	0	0	2.3E2	0.994
16879	4948	Sisma X SLV	45	0	0	0	2.7E2	0.994	16880	4948	Sisma Y SLV	0	45	0	0	2.7E2	0.994
16881	4948	Sisma X SLD	44.3	0	0	0	2.7E2	0.994	16882	4948	Sisma Y SLD	0	44.3	0	0	2.7E2	0.994
16883	4949	Sisma X SLV	38.5	0	0	0	2.3E2	0.994	16884	4949	Sisma Y SLV	0	38.5	0	0	2.3E2	0.994
16885	4949	Sisma X SLD	37.9	0	0	0	2.3E2	0.994	16886	4949	Sisma Y SLD	0	37.9	0	0	2.3E2	0.994
16887	4950	Sisma X SLV	24.7	0	0	0	1.5E2	0.994	16888	4950	Sisma Y SLV	0	24.7	0	0	1.5E2	0.994
16889	4950	Sisma X SLD	24.3	0	0	0	1.5E2	0.994	16890	4950	Sisma Y SLD	0	24.3	0	0	1.5E2	0.994
16891	4951	Sisma X SLV	24.7	0	0	0	1.5E2	0.994	16892	4951	Sisma Y SLV	0	24.7	0	0	1.5E2	0.994
16893	4951	Sisma X SLD	24.3	0	0	0	1.5E2	0.994	16894	4951	Sisma Y SLD	0	24.3	0	0	1.5E2	0.994
16895	4952	Sisma X SLV	24.7	0	0	0	1.5E2	0.994	16896	4952	Sisma Y SLV	0	24.7	0	0	1.5E2	0.994
16897	4952	Sisma X SLD	24.3	0	0	0	1.5E2	0.994	16898	4952	Sisma Y SLD	0	24.3	0	0	1.5E2	0.994
16899	4953	Sisma X SLV	24.7	0	0	0	1.5E2	0.994	16900	4953	Sisma Y SLV	0	24.7	0	0	1.5E2	0.994
16901	4953	Sisma X SLD	24.3	0	0	0	1.5E2	0.994	16902	4953	Sisma Y SLD	0	24.3	0	0	1.5E2	0.994
16903	4954	Sisma X SLV	24.7	0	0	0	1.5E2	0.994	16904	4954	Sisma Y SLV	0	24.7	0	0	1.5E2	0.994
16905	4954	Sisma X SLD	24.3	0	0	0	1.5E2	0.994	16906	4954	Sisma Y SLD	0	24.3	0	0	1.5E2	0.994

Indice	Nodo	Condizione	Fx	Fy	Fz	Mz	Peso	Gamma	Indice	Nodo	Condizione	Fx	Fy	Fz	Mz	Peso	Gamma
16907	4955	Sisma X SLV	24.7	0	0	0	1.5E2	0.994	16908	4955	Sisma Y SLV	0	24.7	0	0	1.5E2	0.994
16909	4955	Sisma X SLD	24.3	0	0	0	1.5E2	0.994	16910	4955	Sisma Y SLD	0	24.3	0	0	1.5E2	0.994
16911	4956	Sisma X SLV	24.7	0	0	0	1.5E2	0.994	16912	4956	Sisma Y SLV	0	24.7	0	0	1.5E2	0.994
16913	4956	Sisma X SLD	24.3	0	0	0	1.5E2	0.994	16914	4956	Sisma Y SLD	0	24.3	0	0	1.5E2	0.994
16915	4957	Sisma X SLV	24.7	0	0	0	1.5E2	0.994	16916	4957	Sisma Y SLV	0	24.7	0	0	1.5E2	0.994
16917	4957	Sisma X SLD	24.3	0	0	0	1.5E2	0.994	16918	4957	Sisma Y SLD	0	24.3	0	0	1.5E2	0.994
16919	4958	Sisma X SLV	24.9	0	0	0	146.62	0.994	16920	4958	Sisma Y SLV	0	24.9	0	0	146.62	0.994
16921	4958	Sisma X SLD	24.5	0	0	0	146.62	0.994	16922	4958	Sisma Y SLD	0	24.5	0	0	146.62	0.994
16923	4959	Sisma X SLV	25.1	0	0	0	1.5E2	0.994	16924	4959	Sisma Y SLV	0	25.1	0	0	1.5E2	0.994
16925	4959	Sisma X SLD	24.7	0	0	0	1.5E2	0.994	16926	4959	Sisma Y SLD	0	24.7	0	0	1.5E2	0.994
16927	4960	Sisma X SLV	25.6	0	0	0	1.5E2	0.994	16928	4960	Sisma Y SLV	0	25.6	0	0	1.5E2	0.994
16929	4960	Sisma X SLD	25.2	0	0	0	1.5E2	0.994	16930	4960	Sisma Y SLD	0	25.2	0	0	1.5E2	0.994
16931	4961	Sisma X SLV	24.7	0	0	0	1.5E2	0.994	16932	4961	Sisma Y SLV	0	24.7	0	0	1.5E2	0.994
16933	4961	Sisma X SLD	24.3	0	0	0	1.5E2	0.994	16934	4961	Sisma Y SLD	0	24.3	0	0	1.5E2	0.994
16935	4962	Sisma X SLV	26.1	0	0	0	1.5E2	0.994	16936	4962	Sisma Y SLV	0	26.1	0	0	1.5E2	0.994
16937	4962	Sisma X SLD	25.7	0	0	0	1.5E2	0.994	16938	4962	Sisma Y SLD	0	25.7	0	0	1.5E2	0.994
16939	4963	Sisma X SLV	38.3	0	0	0	2.3E2	0.994	16940	4963	Sisma Y SLV	0	38.3	0	0	2.3E2	0.994
16941	4963	Sisma X SLD	37.7	0	0	0	2.3E2	0.994	16942	4963	Sisma Y SLD	0	37.7	0	0	2.3E2	0.994
16943	4964	Sisma X SLV	56.7	0	0	0	3.3E2	0.994	16944	4964	Sisma Y SLV	0	56.7	0	0	3.3E2	0.994
16945	4964	Sisma X SLD	55.8	0	0	0	3.3E2	0.994	16946	4964	Sisma Y SLD	0	55.8	0	0	3.3E2	0.994
16947	4965	Sisma X SLV	19.6	0	0	0	115.5	0.994	16948	4965	Sisma Y SLV	0	19.6	0	0	115.5	0.994
16949	4965	Sisma X SLD	19.3	0	0	0	115.5	0.994	16950	4965	Sisma Y SLD	0	19.3	0	0	115.5	0.994
16951	4966	Sisma X SLV	19.6	0	0	0	115.5	0.994	16952	4966	Sisma Y SLV	0	19.6	0	0	115.5	0.994
16953	4966	Sisma X SLD	19.3	0	0	0	115.5	0.994	16954	4966	Sisma Y SLD	0	19.3	0	0	115.5	0.994
16955	4967	Sisma X SLV	38.7	0	0	0	2.3E2	0.994	16956	4967	Sisma Y SLV	0	38.7	0	0	2.3E2	0.994
16957	4967	Sisma X SLD	38.1	0	0	0	2.3E2	0.994	16958	4967	Sisma Y SLD	0	38.1	0	0	2.3E2	0.994
16959	4968	Sisma X SLV	50.9	0	0	0	3.0E2	0.994	16960	4968	Sisma Y SLV	0	50.9	0	0	3.0E2	0.994
16961	4968	Sisma X SLD	50.1	0	0	0	3.0E2	0.994	16962	4968	Sisma Y SLD	0	50.1	0	0	3.0E2	0.994
16963	4969	Sisma X SLV	54	0	0	0	3.2E2	0.994	16964	4969	Sisma Y SLV	0	54	0	0	3.2E2	0.994
16965	4969	Sisma X SLD	53.1	0	0	0	3.2E2	0.994	16966	4969	Sisma Y SLD	0	53.1	0	0	3.2E2	0.994
16967	4970	Sisma X SLV	53.1	0	0	0	3.1E2	0.994	16968	4970	Sisma Y SLV	0	53.1	0	0	3.1E2	0.994
16969	4970	Sisma X SLD	52.2	0	0	0	3.1E2	0.994	16970	4970	Sisma Y SLD	0	52.2	0	0	3.1E2	0.994
16971	4971	Sisma X SLV	59.8	0	0	0	3.5E2	0.994	16972	4971	Sisma Y SLV	0	59.8	0	0	3.5E2	0.994
16973	4971	Sisma X SLD	58.9	0	0	0	3.5E2	0.994	16974	4971	Sisma Y SLD	0	58.9	0	0	3.5E2	0.994
16975	4972	Sisma X SLV	69.5	0	0	0	4.1E2	0.994	16976	4972	Sisma Y SLV	0	69.5	0	0	4.1E2	0.994
16977	4972	Sisma X SLD	68.4	0	0	0	4.1E2	0.994	16978	4972	Sisma Y SLD	0	68.4	0	0	4.1E2	0.994
16979	4973	Sisma X SLV	29.4	0	0	0	173.25	0.994	16980	4973	Sisma Y SLV	0	29.4	0	0	173.25	0.994
16981	4973	Sisma X SLD	28.9	0	0	0	173.25	0.994	16982	4973	Sisma Y SLD	0	28.9	0	0	173.25	0.994
16983	4974	Sisma X SLV	39.1	0	0	0	2.3E2	0.994	16984	4974	Sisma Y SLV	0	39.1	0	0	2.3E2	0.994
16985	4974	Sisma X SLD	38.5	0	0	0	2.3E2	0.994	16986	4974	Sisma Y SLD	0	38.5	0	0	2.3E2	0.994
16987	4975	Sisma X SLV	39	0	0	0	2.3E2	0.994	16988	4975	Sisma Y SLV	0	39	0	0	2.3E2	0.994
16989	4975	Sisma X SLD	38.4	0	0	0	2.3E2	0.994	16990	4975	Sisma Y SLD	0	38.4	0	0	2.3E2	0.994
16991	4976	Sisma X SLV	26.5	0	0	0	1.6E2	0.995	16992	4976	Sisma Y SLV	0	26.5	0	0	1.6E2	0.995
16993	4976	Sisma X SLD	26.1	0	0	0	1.6E2	0.995	16994	4976	Sisma Y SLD	0	26.1	0	0	1.6E2	0.995
16995	4977	Sisma X SLV	38.8	0	0	0	2.3E2	0.995	16996	4977	Sisma Y SLV	0	38.8	0	0	2.3E2	0.995
16997	4977	Sisma X SLD	38.1	0	0	0	2.3E2	0.995	16998	4977	Sisma Y SLD	0	38.1	0	0	2.3E2	0.995
16999	4978	Sisma X SLV	27.2	0	0	0	1.6E2	0.995	17000	4978	Sisma Y SLV	0	27.2	0	0	1.6E2	0.995
17001	4978	Sisma X SLD	26.7	0	0	0	1.6E2	0.995	17002	4978	Sisma Y SLD	0	26.7	0	0	1.6E2	0.995
17003	4979	Sisma X SLV	27.2	0	0	0	1.6E2	0.995	17004	4979	Sisma Y SLV	0	27.2	0	0	1.6E2	0.995
17005	4979	Sisma X SLD	26.7	0	0	0	1.6E2	0.995	17006	4979	Sisma Y SLD	0	26.7	0	0	1.6E2	0.995
17007	4980	Sisma X SLV	26.6	0	0	0	1.6E2	0.995	17008	4980	Sisma Y SLV	0	26.6	0	0	1.6E2	0.995
17009	4980	Sisma X SLD	26.2	0	0	0	1.6E2	0.995	17010	4980	Sisma Y SLD	0	26.2	0	0	1.6E2	0.995
17011	4981	Sisma X SLV	25.5	0	0	0	1.5E2	0.996	17012	4981	Sisma Y SLV	0	25.5	0	0	1.5E2	0.996
17013	4981	Sisma X SLD	25.1	0	0	0	1.5E2	0.996	17014	4981	Sisma Y SLD	0	25.1	0	0	1.5E2	0.996
17015	4982	Sisma X SLV	26.8	0	0	0	1.6E2	0.996	17016	4982	Sisma Y SLV	0	26.8	0	0	1.6E2	0.996
17017	4982	Sisma X SLD	26.4	0	0	0	1.6E2	0.996	17018	4982	Sisma Y SLD	0	26.4	0	0	1.6E2	0.996
17019	4983	Sisma X SLV	28.8	0	0	0	1.7E2	0.996	17020	4983	Sisma Y SLV	0	28.8	0	0	1.7E2	0.996
17021	4983	Sisma X SLD	28.4	0	0	0	1.7E2	0.996	17022	4983	Sisma Y SLD	0	28.4	0	0	1.7E2	0.996
17023	4984	Sisma X SLV	28.8	0	0	0	1.7E2	0.996	17024	4984	Sisma Y SLV	0	28.8	0	0	1.7E2	0.996
17025	4984	Sisma X SLD	28.4	0	0	0	1.7E2	0.996	17026	4984	Sisma Y SLD	0	28.4	0	0	1.7E2	0.996
17027	4985	Sisma X SLV	27.3	0	0	0	1.6E2	0.996	17028	4985	Sisma Y SLV	0	27.3	0	0	1.6E2	0.996
17029	4985	Sisma X SLD	26.9	0	0	0	1.6E2	0.996	17030	4985	Sisma Y SLD	0	26.9	0	0	1.6E2	0.996
17031	4986	Sisma X SLV	27.3	0	0	0	1.6E2	0.996	17032	4986	Sisma Y SLV	0	27.3	0	0	1.6E2	0.996
17033	4986	Sisma X SLD	26.9	0	0	0	1.6E2	0.996	17034	4986	Sisma Y SLD	0	26.9	0	0	1.6E2	0.996
17035	4987	Sisma X SLV	38.9	0	0	0	2.3E2	0.996	17036	4987	Sisma Y SLV	0	38.9	0	0	2.3E2	0.996
17037	4987	Sisma X SLD	38.3	0	0	0	2.3E2	0.996	17038	4987	Sisma Y SLD	0	38.3	0	0	2.3E2	0.996
17039	4988	Sisma X SLV	41.3	0	0	0	2.4E2	0.997	17040	4988	Sisma Y SLV	0	41.3	0	0	2.4E2	0.997
17041	4988	Sisma X SLD	40.6	0	0	0	2.4E2	0.997	17042	4988	Sisma Y SLD	0	40.6	0	0	2.4E2	0.997
17043	4989	Sisma X SLV	41.3	0	0	0	2.4E2	0.997	17044	4989	Sisma Y SLV	0	41.3	0	0	2.4E2	0.997
17045	4989	Sisma X SLD	40.6	0	0	0	2.4E2	0.997	17046	4989	Sisma Y SLD	0	40.6	0	0	2.4E2	0.997
17047	4990	Sisma X SLV	27.1	0	0	0	1.6E2	0.997	17048	4990	Sisma Y SLV	0	27.1	0	0	1.6E2	0.997
17049	4990	Sisma X SLD	26.6	0	0	0	1.6E2	0.997	17050	4990	Sisma Y SLD	0	26.6	0	0	1.6E2	0.997
17051	4991	Sisma X SLV	43	0	0	0	2.5E2	0.998	17052	4991	Sisma Y SLV	0	43	0	0	2.5E2	0.998
17053	4991	Sisma X SLD	42.3	0	0	0	2.5E2	0.998	17054	4991	Sisma Y SLD	0	42.3	0	0	2.5E2	0.998
17055	4992	Sisma X SLV	43	0	0	0	2.5E2	0.998	17056	4992	Sisma Y SLV	0	43	0	0	2.5E2	0.998
17057	4992	Sisma X SLD	42.3	0	0	0	2.5E2	0.998	17058	4992	Sisma Y SLD	0	42.3	0	0	2.5E2	0.998
17059	4993	Sisma X SLV	22.6	0	0	0	1.3E2	0.998	17060	4993	Sisma Y SLV	0	22.6	0	0	1.3E2	0.998
17061	4993	Sisma X SLD	22.2	0	0	0	1.3E2	0.998	17062	4993	Sisma Y SLD	0	22.2	0	0	1.3E2	0.998
17063	4994	Sisma X SLV	28.3	0	0	0	1.7E2	0.998	17064	4994	Sisma Y SLV	0	28.3	0	0	1.7E2	0.998
17065	4994	Sisma X SLD	27.9	0	0	0	1.7E2	0.998	17066	4994	Sisma Y SLD	0	27.9	0	0	1.7E2	0.998
17067	4995	Sisma X SLV	27.5	0	0	0	1.6E2	0.999	17068	4995	Sisma Y SLV	0	27.5	0	0	1.6E2	0.999
17069	4995	Sisma X SLD	27	0	0	0	1.6E2	0.999	17070	4995	Sisma Y SLD	0	27	0	0	1.6E2	0.999
17071	4996	Sisma X SLV	25.9	0	0	0	1.5E2	1	17072	4996	Sisma Y SLV	0	25.9	0	0	1.5E2	1
17073	4996	Sisma X SLD	25.5	0	0	0	1.5E2	1	17074	4996	Sisma Y SLD	0	25.5	0	0	1.5E2	1
17075	4997	Sisma X SLV	40.2	0	0	0	2.4E2	1	17076	4997	Sisma Y SLV	0	40.2	0	0	2.4E2	1
17077	4997	Sisma X SLD	39.6	0	0	0	2.4E2	1	17078	4997	Sisma Y SLD	0	39.6	0	0	2.4E2	1
17079	4998	Sisma X SLV	28	0	0	0	1.6E2	1.001	17080	4998	Sisma Y SLV	0	28	0	0	1.6E2	1.001
17081	4998	Sisma X SLD	27.6	0	0	0	1.6E2	1.001	17082	4998	Sisma Y SLD	0	27.6	0	0	1.6E2	1.001
17083	4999	Sisma X SLV	42.2	0	0	0	2.5E2	1.001	17084	4999	Sisma Y SLV	0	42.2	0	0	2.5E2	1.001
17085	4999	Sisma X SLD	41.6	0	0	0	2.5E2	1.001	17086	4999	Sisma Y SLD	0	41.6	0	0	2.5E2	1.001
17087	5000	Sisma X SLV	42.2	0	0	0	2.5E2	1.001	17088	5000	Sisma Y SLV	0	42.2	0	0	2.5E2	1.001
17089	5000	Sisma X SLD	41.6	0	0	0	2.5E2	1.001	17090	5000	Sisma Y SLD	0	41.6	0	0	2.5E2	1.001
17091	5001	Sisma X SLV	43.9	0	0	0	2.6E2	1.002	17092	5001	Sisma Y SLV	0	43.9	0	0	2.6E2	1.002
17093	5001	Sisma X SLD	43.2	0	0	0	2.6E2	1.002	17094	5001	Sisma Y SLD	0	43.2	0	0	2.6E2	1.002
17095	5002	Sisma X SLV	43.9	0	0	0	2.6E2	1.002	17096	5002	Sisma Y SLV	0	43.9	0	0	2.6E2	1.002
17097	5002	Sisma X SLD	43.2	0	0	0	2.6E2	1.002	17098	5002	Sisma Y SLD	0	43.2	0	0	2.6E2	1.002
17099	5003	Sisma X SLV	22.9	0	0	0	1.3E2	1.002	17100	5003	Sisma Y SLV	0	22.9	0	0	1.3E2	1.002
17101	5003	Sisma X SLD	22.6	0	0	0	1.3E2	1.002	17102	5003	Sisma Y SLD	0	22.6	0	0	1.3E2	1.002
17103	5004	Sisma X SLV	36.3	0	0	0	2.1E2	1.003	17104	5004	Sisma Y SLV	0	36.3	0	0	2.1E2	1.003
17105	5004	Sisma X SLD	35.7	0	0	0	2.1E2	1.003	17106	5004	Sisma Y SLD	0	35.7	0	0	2.1E2	1.003
17107	5005	Sisma X SLV	36.3	0	0	0	2.1E2	1.003	17108	5005	Sisma Y SLV	0	36.3	0	0	2.1E2	1.003
17109	5005	Sisma X SLD	35.7	0	0	0	2.1E2	1.003	17110	5005	Sisma Y SLD	0	35.7	0	0	2.1E2	1.003
17111	5006	Sisma X SLV	26.4	0	0	0	1.5E2	1.003	17112	5006	Sisma Y SLV	0	26.4	0	0	1.5E2	1.003
17113	5006	Sisma X SLD	26	0	0	0	1.5E2	1.003	17114	5006	Sisma Y SLD	0	26	0	0	1.5E2	1.003

Indice	Nodo	Condizione	Fx	Fy	Fz	Mz	Peso	Gamma	Indice	Nodo	Condizione	Fx	Fy	Fz	Mz	Peso	Gamma
17115	5007	Sisma X SLV	29.2	0	0	0	170.6	1.004	17116	5007	Sisma Y SLV	0	29.2	0	0	170.6	1.004
17117	5007	Sisma X SLD	28.7	0	0	0	170.6	1.004	17118	5007	Sisma Y SLD	0	28.7	0	0	170.6	1.004
17119	5008	Sisma X SLV	28.8	0	0	0	168.17	1.004	17120	5008	Sisma Y SLV	0	28.8	0	0	168.17	1.004
17121	5008	Sisma X SLD	28.3	0	0	0	168.17	1.004	17122	5008	Sisma Y SLD	0	28.3	0	0	168.17	1.004
17123	5009	Sisma X SLV	41.5	0	0	0	241.9	1.005	17124	5009	Sisma Y SLV	0	41.5	0	0	241.9	1.005
17125	5009	Sisma X SLD	40.8	0	0	0	241.9	1.005	17126	5009	Sisma Y SLD	0	40.8	0	0	241.9	1.005
17127	5010	Sisma X SLV	43.4	0	0	0	2.5E2	1.006	17128	5010	Sisma Y SLV	0	43.4	0	0	2.5E2	1.006
17129	5010	Sisma X SLD	42.7	0	0	0	2.5E2	1.006	17130	5010	Sisma Y SLD	0	42.7	0	0	2.5E2	1.006
17131	5011	Sisma X SLV	43.4	0	0	0	2.5E2	1.006	17132	5011	Sisma Y SLV	0	43.4	0	0	2.5E2	1.006
17133	5011	Sisma X SLD	42.7	0	0	0	2.5E2	1.006	17134	5011	Sisma Y SLD	0	42.7	0	0	2.5E2	1.006
17135	5012	Sisma X SLV	45.1	0	0	0	2.6E2	1.006	17136	5012	Sisma Y SLV	0	45.1	0	0	2.6E2	1.006
17137	5012	Sisma X SLD	44.4	0	0	0	2.6E2	1.006	17138	5012	Sisma Y SLD	0	44.4	0	0	2.6E2	1.006
17139	5013	Sisma X SLV	45.1	0	0	0	2.6E2	1.006	17140	5013	Sisma Y SLV	0	45.1	0	0	2.6E2	1.006
17141	5013	Sisma X SLD	44.4	0	0	0	2.6E2	1.006	17142	5013	Sisma Y SLD	0	44.4	0	0	2.6E2	1.006
17143	5014	Sisma X SLV	11.7	0	0	0	67.913	1.007	17144	5014	Sisma Y SLV	0	11.7	0	0	67.913	1.007
17145	5014	Sisma X SLD	11.5	0	0	0	67.913	1.007	17146	5014	Sisma Y SLD	0	11.5	0	0	67.913	1.007
17147	5015	Sisma X SLV	14.7	0	0	0	85.696	1.007	17148	5015	Sisma Y SLV	0	14.7	0	0	85.696	1.007
17149	5015	Sisma X SLD	14.5	0	0	0	85.696	1.007	17150	5015	Sisma Y SLD	0	14.5	0	0	85.696	1.007
17151	5016	Sisma X SLV	26.9	0	0	0	1.6E2	1.007	17152	5016	Sisma Y SLV	0	26.9	0	0	1.6E2	1.007
17153	5016	Sisma X SLD	26.5	0	0	0	1.6E2	1.007	17154	5016	Sisma Y SLD	0	26.5	0	0	1.6E2	1.007
17155	5017	Sisma X SLV	52.8	0	0	0	3.1E2	1.008	17156	5017	Sisma Y SLV	0	52.8	0	0	3.1E2	1.008
17157	5017	Sisma X SLD	52	0	0	0	3.1E2	1.008	17158	5017	Sisma Y SLD	0	52	0	0	3.1E2	1.008
17159	5018	Sisma X SLV	44.9	0	0	0	2.6E2	1.008	17160	5018	Sisma Y SLV	0	44.9	0	0	2.6E2	1.008
17161	5018	Sisma X SLD	44.2	0	0	0	2.6E2	1.008	17162	5018	Sisma Y SLD	0	44.2	0	0	2.6E2	1.008
17163	5019	Sisma X SLV	45.1	0	0	0	2.6E2	1.008	17164	5019	Sisma Y SLV	0	45.1	0	0	2.6E2	1.008
17165	5019	Sisma X SLD	44.3	0	0	0	2.6E2	1.008	17166	5019	Sisma Y SLD	0	44.3	0	0	2.6E2	1.008
17167	5020	Sisma X SLV	30.3	0	0	0	1.8E2	1.009	17168	5020	Sisma Y SLV	0	30.3	0	0	1.8E2	1.009
17169	5020	Sisma X SLD	29.8	0	0	0	1.8E2	1.009	17170	5020	Sisma Y SLD	0	29.8	0	0	1.8E2	1.009
17171	5021	Sisma X SLV	42.8	0	0	0	2.5E2	1.011	17172	5021	Sisma Y SLV	0	42.8	0	0	2.5E2	1.011
17173	5021	Sisma X SLD	42.1	0	0	0	2.5E2	1.011	17174	5021	Sisma Y SLD	0	42.1	0	0	2.5E2	1.011
17175	5022	Sisma X SLV	44.7	0	0	0	2.6E2	1.011	17176	5022	Sisma Y SLV	0	44.7	0	0	2.6E2	1.011
17177	5022	Sisma X SLD	44	0	0	0	2.6E2	1.011	17178	5022	Sisma Y SLD	0	44	0	0	2.6E2	1.011
17179	5023	Sisma X SLV	44.7	0	0	0	2.6E2	1.011	17180	5023	Sisma Y SLV	0	44.7	0	0	2.6E2	1.011
17181	5023	Sisma X SLD	44	0	0	0	2.6E2	1.011	17182	5023	Sisma Y SLD	0	44	0	0	2.6E2	1.011
17183	5024	Sisma X SLV	46.5	0	0	0	2.7E2	1.011	17184	5024	Sisma Y SLV	0	46.5	0	0	2.7E2	1.011
17185	5024	Sisma X SLD	45.7	0	0	0	2.7E2	1.011	17186	5024	Sisma Y SLD	0	45.7	0	0	2.7E2	1.011
17187	5025	Sisma X SLV	46.5	0	0	0	2.7E2	1.011	17188	5025	Sisma Y SLV	0	46.5	0	0	2.7E2	1.011
17189	5025	Sisma X SLD	45.7	0	0	0	2.7E2	1.011	17190	5025	Sisma Y SLD	0	45.7	0	0	2.7E2	1.011
17191	5026	Sisma X SLV	27.6	0	0	0	1.6E2	1.012	17192	5026	Sisma Y SLV	0	27.6	0	0	1.6E2	1.012
17193	5026	Sisma X SLD	27.2	0	0	0	1.6E2	1.012	17194	5026	Sisma Y SLD	0	27.2	0	0	1.6E2	1.012
17195	5027	Sisma X SLV	38.1	0	0	0	2.2E2	1.012	17196	5027	Sisma Y SLV	0	38.1	0	0	2.2E2	1.012
17197	5027	Sisma X SLD	37.5	0	0	0	2.2E2	1.012	17198	5027	Sisma Y SLD	0	37.5	0	0	2.2E2	1.012
17199	5028	Sisma X SLV	38.1	0	0	0	2.2E2	1.012	17200	5028	Sisma Y SLV	0	38.1	0	0	2.2E2	1.012
17201	5028	Sisma X SLD	37.5	0	0	0	2.2E2	1.012	17202	5028	Sisma Y SLD	0	37.5	0	0	2.2E2	1.012
17203	5029	Sisma X SLV	31.5	0	0	0	1.8E2	1.016	17204	5029	Sisma Y SLV	0	31.5	0	0	1.8E2	1.016
17205	5029	Sisma X SLD	31	0	0	0	1.8E2	1.016	17206	5029	Sisma Y SLD	0	31	0	0	1.8E2	1.016
17207	5030	Sisma X SLV	44.7	0	0	0	2.6E2	1.016	17208	5030	Sisma Y SLV	0	44.7	0	0	2.6E2	1.016
17209	5030	Sisma X SLD	44	0	0	0	2.6E2	1.016	17210	5030	Sisma Y SLD	0	44	0	0	2.6E2	1.016
17211	5031	Sisma X SLV	46.3	0	0	0	2.7E2	1.016	17212	5031	Sisma Y SLV	0	46.3	0	0	2.7E2	1.016
17213	5031	Sisma X SLD	45.6	0	0	0	2.7E2	1.016	17214	5031	Sisma Y SLD	0	45.6	0	0	2.7E2	1.016
17215	5032	Sisma X SLV	44.3	0	0	0	2.6E2	1.016	17216	5032	Sisma Y SLV	0	44.3	0	0	2.6E2	1.016
17217	5032	Sisma X SLD	43.6	0	0	0	2.6E2	1.016	17218	5032	Sisma Y SLD	0	43.6	0	0	2.6E2	1.016
17219	5033	Sisma X SLV	46.3	0	0	0	2.7E2	1.016	17220	5033	Sisma Y SLV	0	46.3	0	0	2.7E2	1.016
17221	5033	Sisma X SLD	45.6	0	0	0	2.7E2	1.016	17222	5033	Sisma Y SLD	0	45.6	0	0	2.7E2	1.016
17223	5034	Sisma X SLV	46.3	0	0	0	2.7E2	1.016	17224	5034	Sisma Y SLV	0	46.3	0	0	2.7E2	1.016
17225	5034	Sisma X SLD	45.6	0	0	0	2.7E2	1.016	17226	5034	Sisma Y SLD	0	45.6	0	0	2.7E2	1.016
17227	5035	Sisma X SLV	48.1	0	0	0	2.8E2	1.016	17228	5035	Sisma Y SLV	0	48.1	0	0	2.8E2	1.016
17229	5035	Sisma X SLD	47.3	0	0	0	2.8E2	1.016	17230	5035	Sisma Y SLD	0	47.3	0	0	2.8E2	1.016
17231	5036	Sisma X SLV	48.1	0	0	0	2.8E2	1.016	17232	5036	Sisma Y SLV	0	48.1	0	0	2.8E2	1.016
17233	5036	Sisma X SLD	47.3	0	0	0	2.8E2	1.016	17234	5036	Sisma Y SLD	0	47.3	0	0	2.8E2	1.016
17235	5037	Sisma X SLV	28.4	0	0	0	1.6E2	1.017	17236	5037	Sisma Y SLV	0	28.4	0	0	1.6E2	1.017
17237	5037	Sisma X SLD	28	0	0	0	1.6E2	1.017	17238	5037	Sisma Y SLD	0	28	0	0	1.6E2	1.017
17239	5038	Sisma X SLV	46.2	0	0	0	2.7E2	1.017	17240	5038	Sisma Y SLV	0	46.2	0	0	2.7E2	1.017
17241	5038	Sisma X SLD	45.4	0	0	0	2.7E2	1.017	17242	5038	Sisma Y SLD	0	45.4	0	0	2.7E2	1.017
17243	5039	Sisma X SLV	25.6	0	0	0	1.5E2	1.018	17244	5039	Sisma Y SLV	0	25.6	0	0	1.5E2	1.018
17245	5039	Sisma X SLD	25.2	0	0	0	1.5E2	1.018	17246	5039	Sisma Y SLD	0	25.2	0	0	1.5E2	1.018
17247	5040	Sisma X SLV	44.6	0	0	0	2.6E2	1.019	17248	5040	Sisma Y SLV	0	44.6	0	0	2.6E2	1.019
17249	5040	Sisma X SLD	43.9	0	0	0	2.6E2	1.019	17250	5040	Sisma Y SLD	0	43.9	0	0	2.6E2	1.019
17251	5041	Sisma X SLV	42.3	0	0	0	2.4E2	1.019	17252	5041	Sisma Y SLV	0	42.3	0	0	2.4E2	1.019
17253	5041	Sisma X SLD	41.6	0	0	0	2.4E2	1.019	17254	5041	Sisma Y SLD	0	41.6	0	0	2.4E2	1.019
17255	5042	Sisma X SLV	43	0	0	0	2.5E2	1.02	17256	5042	Sisma Y SLV	0	43	0	0	2.5E2	1.02
17257	5042	Sisma X SLD	42.3	0	0	0	2.5E2	1.02	17258	5042	Sisma Y SLD	0	42.3	0	0	2.5E2	1.02
17259	5043	Sisma X SLV	28.1	0	0	0	1.6E2	1.022	17260	5043	Sisma Y SLV	0	28.1	0	0	1.6E2	1.022
17261	5043	Sisma X SLD	27.6	0	0	0	1.6E2	1.022	17262	5043	Sisma Y SLD	0	27.6	0	0	1.6E2	1.022
17263	5044	Sisma X SLV	22.7	0	0	0	1.3E2	1.022	17264	5044	Sisma Y SLV	0	22.7	0	0	1.3E2	1.022
17265	5044	Sisma X SLD	22.4	0	0	0	1.3E2	1.022	17266	5044	Sisma Y SLD	0	22.4	0	0	1.3E2	1.022
17267	5045	Sisma X SLV	19.8	0	0	0	1.1E2	1.022	17268	5045	Sisma Y SLV	0	19.8	0	0	1.1E2	1.022
17269	5045	Sisma X SLD	19.5	0	0	0	1.1E2	1.022	17270	5045	Sisma Y SLD	0	19.5	0	0	1.1E2	1.022
17271	5046	Sisma X SLV	19.8	0	0	0	1.1E2	1.022	17272	5046	Sisma Y SLV	0	19.8	0	0	1.1E2	1.022
17273	5046	Sisma X SLD	19.5	0	0	0	1.1E2	1.022	17274	5046	Sisma Y SLD	0	19.5	0	0	1.1E2	1.022
17275	5047	Sisma X SLV	23.8	0	0	0	1.4E2	1.022	17276	5047	Sisma Y SLV	0	23.8	0	0	1.4E2	1.022
17277	5047	Sisma X SLD	23.4	0	0	0	1.4E2	1.022	17278	5047	Sisma Y SLD	0	23.4	0	0	1.4E2	1.022
17279	5048	Sisma X SLV	23.8	0	0	0	1.4E2	1.022	17280	5048	Sisma Y SLV	0	23.8	0	0	1.4E2	1.022
17281	5048	Sisma X SLD	23.4	0	0	0	1.4E2	1.022	17282	5048	Sisma Y SLD	0	23.4	0	0	1.4E2	1.022
17283	5049	Sisma X SLV	16.2	0	0	0	92.832	1.022	17284	5049	Sisma Y SLV	0	16.2	0	0	92.832	1.022
17285	5049	Sisma X SLD	15.9	0	0	0	92.832	1.022	17286	5049	Sisma Y SLD	0	15.9	0	0	92.832	1.022
17287	5050	Sisma X SLV	14.6	0	0	0	83.511	1.022	17288	5050	Sisma Y SLV	0	14.6	0	0	83.511	1.022
17289	5050	Sisma X SLD	14.3	0	0	0	83.511	1.022	17290	5050	Sisma Y SLD	0	14.3	0	0	83.511	1.022
17291	5051	Sisma X SLV	20.8	0	0	0	119.01	1.022	17292	5051	Sisma Y SLV	0	20.8	0	0	119.01	1.022
17293	5051	Sisma X SLD	20.4	0	0	0	119.01	1.022	17294	5051	Sisma Y SLD	0	20.4	0	0	119.01	1.022
17295	5052	Sisma X SLV	20.8	0	0	0	119.01	1.022	17296	5052	Sisma Y SLV	0	20.8	0	0	119.01	1.022
17297	5052	Sisma X SLD	20.4	0	0	0	119.01	1.022	17298	5052	Sisma Y SLD	0	20.4	0	0	119.01	1.022
17299	5053	Sisma X SLV	24.7	0	0	0	1.4E2	1.022	17300	5053	Sisma Y SLV	0	24.7	0	0	1.4E2	1.022
17301	5053	Sisma X SLD	24.3	0	0	0	1.4E2	1.022	17302	5053	Sisma Y SLD	0	24.3	0	0	1.4E2	1.022
17303	5054	Sisma X SLV	24.7	0	0	0	1.4E2	1.022	17304	5054	Sisma Y SLV	0	24.7	0	0	1.4E2	1.022
17305	5054	Sisma X SLD	24.3	0	0	0	1.4E2	1.022	17306	5054	Sisma Y SLD	0	24.3	0	0	1.4E2	1.022
17307	5055	Sisma X SLV	23.8	0	0	0	1.4E2	1.022	17308	5055	Sisma Y SLV	0	23.8	0	0	1.4E2	1.022
17309	5055	Sisma X SLD	23.4	0	0	0	1.4E2	1.022	17310	5055	Sisma Y SLD	0	23.4	0	0	1.4E2	1.022
17311	5056	Sisma X SLV	23.8	0	0	0	1.4E2	1.022	17312	5056	Sisma Y SLV	0	23.8	0	0	1.4E2	1.022
17313	5056	Sisma X SLD	23.4	0	0	0	1.4E2	1.022	17314	5056	Sisma Y SLD	0	23.4	0	0	1.4E2	1.022
17315	5057	Sisma X SLV	21.1	0	0	0	1.2E2	1.022	17316	5057	Sisma Y SLV	0	21.1	0	0	1.2E2	1.022

Indice	Nodo	Condizione	Fx	Fy	Fz	Mz	Peso	Gamma	Indice	Nodo	Condizione	Fx	Fy	Fz	Mz	Peso	Gamma
17317	5057	Sisma X SLD	20.8	0	0	0	1.2E2	1.022	17318	5057	Sisma Y SLD	0	20.8	0	0	1.2E2	1.022
17319	5058	Sisma X SLV	21	0	0	0	120.57	1.022	17320	5058	Sisma Y SLV	0	21	0	0	120.57	1.022
17321	5058	Sisma X SLD	20.7	0	0	0	120.57	1.022	17322	5058	Sisma Y SLD	0	20.7	0	0	120.57	1.022
17323	5059	Sisma X SLV	16.9	0	0	0	97.164	1.022	17324	5059	Sisma Y SLV	0	16.9	0	0	97.164	1.022
17325	5059	Sisma X SLD	16.7	0	0	0	97.164	1.022	17326	5059	Sisma Y SLD	0	16.7	0	0	97.164	1.022
17327	5060	Sisma X SLV	41.4	0	0	0	237.05	1.025	17328	5060	Sisma Y SLV	0	41.4	0	0	237.05	1.025
17329	5060	Sisma X SLD	40.8	0	0	0	237.05	1.025	17330	5060	Sisma Y SLD	0	40.8	0	0	237.05	1.025
17331	5061	Sisma X SLV	41.4	0	0	0	237.05	1.025	17332	5061	Sisma Y SLV	0	41.4	0	0	237.05	1.025
17333	5061	Sisma X SLD	40.8	0	0	0	237.05	1.025	17334	5061	Sisma Y SLD	0	40.8	0	0	237.05	1.025
17335	5062	Sisma X SLV	38.9	0	0	0	2.2E2	1.03	17336	5062	Sisma Y SLV	0	38.9	0	0	2.2E2	1.03
17337	5062	Sisma X SLD	38.3	0	0	0	2.2E2	1.03	17338	5062	Sisma Y SLD	0	38.3	0	0	2.2E2	1.03
17339	5063	Sisma X SLV	38.9	0	0	0	2.2E2	1.03	17340	5063	Sisma Y SLV	0	38.9	0	0	2.2E2	1.03
17341	5063	Sisma X SLD	38.3	0	0	0	2.2E2	1.03	17342	5063	Sisma Y SLD	0	38.3	0	0	2.2E2	1.03
17343	5064	Sisma X SLV	28	0	0	0	1.6E2	1.03	17344	5064	Sisma Y SLV	0	28	0	0	1.6E2	1.03
17345	5064	Sisma X SLD	27.6	0	0	0	1.6E2	1.03	17346	5064	Sisma Y SLD	0	27.6	0	0	1.6E2	1.03
17347	5065	Sisma X SLV	36.9	0	0	0	2.1E2	1.043	17348	5065	Sisma Y SLV	0	36.9	0	0	2.1E2	1.043
17349	5065	Sisma X SLD	36.3	0	0	0	2.1E2	1.043	17350	5065	Sisma Y SLD	0	36.3	0	0	2.1E2	1.043
17351	5066	Sisma X SLV	36.9	0	0	0	2.1E2	1.043	17352	5066	Sisma Y SLV	0	36.9	0	0	2.1E2	1.043
17353	5066	Sisma X SLD	36.3	0	0	0	2.1E2	1.043	17354	5066	Sisma Y SLD	0	36.3	0	0	2.1E2	1.043
17355	5067	Sisma X SLV	13.7	0	0	0	76.847	1.046	17356	5067	Sisma Y SLV	0	13.7	0	0	76.847	1.046
17357	5067	Sisma X SLD	13.5	0	0	0	76.847	1.046	17358	5067	Sisma Y SLD	0	13.5	0	0	76.847	1.046
17359	5068	Sisma X SLV	34.8	0	0	0	1.9E2	1.051	17360	5068	Sisma Y SLV	0	34.8	0	0	1.9E2	1.051
17361	5068	Sisma X SLD	34.2	0	0	0	1.9E2	1.051	17362	5068	Sisma Y SLD	0	34.2	0	0	1.9E2	1.051
17363	5069	Sisma X SLV	34.8	0	0	0	1.9E2	1.051	17364	5069	Sisma Y SLV	0	34.8	0	0	1.9E2	1.051
17365	5069	Sisma X SLD	34.2	0	0	0	1.9E2	1.051	17366	5069	Sisma Y SLD	0	34.2	0	0	1.9E2	1.051
17367	5070	Sisma X SLV	34.5	0	0	0	1.9E2	1.057	17368	5070	Sisma Y SLV	0	34.5	0	0	1.9E2	1.057
17369	5070	Sisma X SLD	33.9	0	0	0	1.9E2	1.057	17370	5070	Sisma Y SLD	0	33.9	0	0	1.9E2	1.057
17371	5071	Sisma X SLV	34.5	0	0	0	1.9E2	1.057	17372	5071	Sisma Y SLV	0	34.5	0	0	1.9E2	1.057
17373	5071	Sisma X SLD	33.9	0	0	0	1.9E2	1.057	17374	5071	Sisma Y SLD	0	33.9	0	0	1.9E2	1.057
17375	5072	Sisma X SLV	32.3	0	0	0	1.8E2	1.059	17376	5072	Sisma Y SLV	0	32.3	0	0	1.8E2	1.059
17377	5072	Sisma X SLD	31.8	0	0	0	1.8E2	1.059	17378	5072	Sisma Y SLD	0	31.8	0	0	1.8E2	1.059
17379	5073	Sisma X SLV	32.3	0	0	0	1.8E2	1.059	17380	5073	Sisma Y SLV	0	32.3	0	0	1.8E2	1.059
17381	5073	Sisma X SLD	31.8	0	0	0	1.8E2	1.059	17382	5073	Sisma Y SLD	0	31.8	0	0	1.8E2	1.059
17383	5074	Sisma X SLV	38.6	0	0	0	2.1E2	1.059	17384	5074	Sisma Y SLV	0	38.6	0	0	2.1E2	1.059
17385	5074	Sisma X SLD	38	0	0	0	2.1E2	1.059	17386	5074	Sisma Y SLD	0	38	0	0	2.1E2	1.059
17387	5075	Sisma X SLV	65	0	0	0	3.6E2	1.059	17388	5075	Sisma Y SLV	0	65	0	0	3.6E2	1.059
17389	5075	Sisma X SLD	64	0	0	0	3.6E2	1.059	17390	5075	Sisma Y SLD	0	64	0	0	3.6E2	1.059
17391	5076	Sisma X SLV	59.7	0	0	0	3.3E2	1.059	17392	5076	Sisma Y SLV	0	59.7	0	0	3.3E2	1.059
17393	5076	Sisma X SLD	58.8	0	0	0	3.3E2	1.059	17394	5076	Sisma Y SLD	0	58.8	0	0	3.3E2	1.059
17395	5077	Sisma X SLV	40.8	0	0	0	2.3E2	1.059	17396	5077	Sisma Y SLV	0	40.8	0	0	2.3E2	1.059
17397	5077	Sisma X SLD	40.1	0	0	0	2.3E2	1.059	17398	5077	Sisma Y SLD	0	40.1	0	0	2.3E2	1.059
17399	5078	Sisma X SLV	40.8	0	0	0	2.3E2	1.059	17400	5078	Sisma Y SLV	0	40.8	0	0	2.3E2	1.059
17401	5078	Sisma X SLD	40.1	0	0	0	2.3E2	1.059	17402	5078	Sisma Y SLD	0	40.1	0	0	2.3E2	1.059
17403	5079	Sisma X SLV	41.8	0	0	0	2.3E2	1.059	17404	5079	Sisma Y SLV	0	41.8	0	0	2.3E2	1.059
17405	5079	Sisma X SLD	41.1	0	0	0	2.3E2	1.059	17406	5079	Sisma Y SLD	0	41.1	0	0	2.3E2	1.059
17407	5080	Sisma X SLV	64.5	0	0	0	3.6E2	1.059	17408	5080	Sisma Y SLV	0	64.5	0	0	3.6E2	1.059
17409	5080	Sisma X SLD	63.5	0	0	0	3.6E2	1.059	17410	5080	Sisma Y SLD	0	63.5	0	0	3.6E2	1.059
17411	5081	Sisma X SLV	63.5	0	0	0	3.5E2	1.059	17412	5081	Sisma Y SLV	0	63.5	0	0	3.5E2	1.059
17413	5081	Sisma X SLD	62.5	0	0	0	3.5E2	1.059	17414	5081	Sisma Y SLD	0	62.5	0	0	3.5E2	1.059
17415	5082	Sisma X SLV	26.2	0	0	0	145.06	1.059	17416	5082	Sisma Y SLV	0	26.2	0	0	145.06	1.059
17417	5082	Sisma X SLD	25.8	0	0	0	145.06	1.059	17418	5082	Sisma Y SLD	0	25.8	0	0	145.06	1.059
17419	5083	Sisma X SLV	26.2	0	0	0	145.06	1.059	17420	5083	Sisma Y SLV	0	26.2	0	0	145.06	1.059
17421	5083	Sisma X SLD	25.8	0	0	0	145.06	1.059	17422	5083	Sisma Y SLD	0	25.8	0	0	145.06	1.059
17423	5084	Sisma X SLV	26.2	0	0	0	145.06	1.059	17424	5084	Sisma Y SLV	0	26.2	0	0	145.06	1.059
17425	5084	Sisma X SLD	25.8	0	0	0	145.06	1.059	17426	5084	Sisma Y SLD	0	25.8	0	0	145.06	1.059
17427	5085	Sisma X SLV	26.2	0	0	0	145.06	1.059	17428	5085	Sisma Y SLV	0	26.2	0	0	145.06	1.059
17429	5085	Sisma X SLD	25.8	0	0	0	145.06	1.059	17430	5085	Sisma Y SLD	0	25.8	0	0	145.06	1.059
17431	5086	Sisma X SLV	26.2	0	0	0	145.06	1.059	17432	5086	Sisma Y SLV	0	26.2	0	0	145.06	1.059
17433	5086	Sisma X SLD	25.8	0	0	0	145.06	1.059	17434	5086	Sisma Y SLD	0	25.8	0	0	145.06	1.059
17435	5087	Sisma X SLV	26.2	0	0	0	1.5E2	1.059	17436	5087	Sisma Y SLV	0	26.2	0	0	1.5E2	1.059
17437	5087	Sisma X SLD	25.8	0	0	0	1.5E2	1.059	17438	5087	Sisma Y SLD	0	25.8	0	0	1.5E2	1.059
17439	5088	Sisma X SLV	26.2	0	0	0	1.5E2	1.059	17440	5088	Sisma Y SLV	0	26.2	0	0	1.5E2	1.059
17441	5088	Sisma X SLD	25.8	0	0	0	1.5E2	1.059	17442	5088	Sisma Y SLD	0	25.8	0	0	1.5E2	1.059
17443	5089	Sisma X SLV	26.2	0	0	0	1.5E2	1.059	17444	5089	Sisma Y SLV	0	26.2	0	0	1.5E2	1.059
17445	5089	Sisma X SLD	25.8	0	0	0	1.5E2	1.059	17446	5089	Sisma Y SLD	0	25.8	0	0	1.5E2	1.059
17447	5090	Sisma X SLV	26.3	0	0	0	1.5E2	1.059	17448	5090	Sisma Y SLV	0	26.3	0	0	1.5E2	1.059
17449	5090	Sisma X SLD	25.9	0	0	0	1.5E2	1.059	17450	5090	Sisma Y SLD	0	25.9	0	0	1.5E2	1.059
17451	5091	Sisma X SLV	26.4	0	0	0	1.5E2	1.059	17452	5091	Sisma Y SLV	0	26.4	0	0	1.5E2	1.059
17453	5091	Sisma X SLD	26	0	0	0	1.5E2	1.059	17454	5091	Sisma Y SLD	0	26	0	0	1.5E2	1.059
17455	5092	Sisma X SLV	26.7	0	0	0	1.5E2	1.059	17456	5092	Sisma Y SLV	0	26.7	0	0	1.5E2	1.059
17457	5092	Sisma X SLD	26.2	0	0	0	1.5E2	1.059	17458	5092	Sisma Y SLD	0	26.2	0	0	1.5E2	1.059
17459	5093	Sisma X SLV	27.1	0	0	0	1.5E2	1.059	17460	5093	Sisma Y SLV	0	27.1	0	0	1.5E2	1.059
17461	5093	Sisma X SLD	26.7	0	0	0	1.5E2	1.059	17462	5093	Sisma Y SLD	0	26.7	0	0	1.5E2	1.059
17463	5094	Sisma X SLV	27.5	0	0	0	152.43	1.059	17464	5094	Sisma Y SLV	0	27.5	0	0	152.43	1.059
17465	5094	Sisma X SLD	27.1	0	0	0	152.43	1.059	17466	5094	Sisma Y SLD	0	27.1	0	0	152.43	1.059
17467	5095	Sisma X SLV	55.2	0	0	0	3.1E2	1.059	17468	5095	Sisma Y SLV	0	55.2	0	0	3.1E2	1.059
17469	5095	Sisma X SLD	54.3	0	0	0	3.1E2	1.059	17470	5095	Sisma Y SLD	0	54.3	0	0	3.1E2	1.059
17471	5096	Sisma X SLV	38.6	0	0	0	2.1E2	1.059	17472	5096	Sisma Y SLV	0	38.6	0	0	2.1E2	1.059
17473	5096	Sisma X SLD	37.9	0	0	0	2.1E2	1.059	17474	5096	Sisma Y SLD	0	37.9	0	0	2.1E2	1.059
17475	5097	Sisma X SLV	55.4	0	0	0	3.1E2	1.059	17476	5097	Sisma Y SLV	0	55.4	0	0	3.1E2	1.059
17477	5097	Sisma X SLD	54.5	0	0	0	3.1E2	1.059	17478	5097	Sisma Y SLD	0	54.5	0	0	3.1E2	1.059
17479	5098	Sisma X SLV	40.8	0	0	0	2.3E2	1.059	17480	5098	Sisma Y SLV	0	40.8	0	0	2.3E2	1.059
17481	5098	Sisma X SLD	40.1	0	0	0	2.3E2	1.059	17482	5098	Sisma Y SLD	0	40.1	0	0	2.3E2	1.059
17483	5099	Sisma X SLV	40.8	0	0	0	2.3E2	1.059	17484	5099	Sisma Y SLV	0	40.8	0	0	2.3E2	1.059
17485	5099	Sisma X SLD	40.1	0	0	0	2.3E2	1.059	17486	5099	Sisma Y SLD	0	40.1	0	0	2.3E2	1.059
17487	5100	Sisma X SLV	43.1	0	0	0	2.4E2	1.059	17488	5100	Sisma Y SLV	0	43.1	0	0	2.4E2	1.059
17489	5100	Sisma X SLD	42.4	0	0	0	2.4E2	1.059	17490	5100	Sisma Y SLD	0	42.4	0	0	2.4E2	1.059
17491	5101	Sisma X SLV	40.1	0	0	0	2.2E2	1.059	17492	5101	Sisma Y SLV	0	40.1	0	0	2.2E2	1.059
17493	5101	Sisma X SLD	39.4	0	0	0	2.2E2	1.059	17494	5101	Sisma Y SLD	0	39.4	0	0	2.2E2	1.059
17495	5102	Sisma X SLV	40.8	0	0	0	2.3E2	1.059	17496	5102	Sisma Y SLV	0	40.8	0	0	2.3E2	1.059
17497	5102	Sisma X SLD	40.1	0	0	0	2.3E2	1.059	17498	5102	Sisma Y SLD	0	40.1	0	0	2.3E2	1.059
17499	5103	Sisma X SLV	40.7	0	0	0	225.47	1.059	17500	5103	Sisma Y SLV	0	40.7	0	0	225.47	1.059
17501	5103	Sisma X SLD	40.1	0	0	0	225.47	1.059	17502	5103	Sisma Y SLD	0	40.1	0	0	225.47	1.059
17503	5104	Sisma X SLV	40.3	0	0	0	2.2E2	1.059	17504	5104	Sisma Y SLV	0	40.3	0	0	2.2E2	1.059
17505	5104	Sisma X SLD	39.6	0	0	0	2.2E2	1.059	17506	5104	Sisma Y SLD	0	39.6	0	0	2.2E2	1.059
17507	5105	Sisma X SLV	40.7	0	0	0	225.47	1.059	17508	5105	Sisma Y SLV	0	40.7	0	0	225.47	1.059
17509	5105	Sisma X SLD	40.1	0	0	0	225.47	1.059	17510	5105	Sisma Y SLD	0	40.1	0	0	225.47	1.059
17511	5106	Sisma X SLV	40.8	0	0	0	2.3E2	1.059	17512	5106	Sisma Y SLV	0	40.8	0	0	2.3E2	1.059
17513	5106	Sisma X SLD	40.2	0	0	0	2.3E2	1.059	17514	5106	Sisma Y SLD	0	40.2	0	0	2.3E2	1.059
17515	5107	Sisma X SLV	40.6	0	0	0	2.2E2	1.059	17516	5107	Sisma Y SLV	0	40.6	0	0	2.2E2	1.059
17517	5107	Sisma X SLD	40	0	0	0	2.2E2	1.059	17518	5107	Sisma Y SLD	0	40	0	0	2.2E2	1.059
17519	5108	Sisma X SLV	41	0	0	0	2.3E2	1.059	17520	5108	Sisma Y SLV	0	41	0	0	2.3E2	1.059
17521	5108	Sisma X SLD	40.4	0	0	0	2.3E2	1.059	17522	5108	Sisma Y SLD	0	40.4	0	0	2.3E2	1.059
17523	5109	Sisma X SLV	40.7	0	0	0	2.3E2	1.059	17524	5109	Sisma Y SLV	0	40.7	0	0	2.3E2	1.059

muratura

Indice	Nodo	Condizione	Fx	Fy	Fz	Mz	Peso	Gamma	Indice	Nodo	Condizione	Fx	Fy	Fz	Mz	Peso	Gamma
17525	5109	Sisma X SLD	40	0	0	0	2.3E2	1.059	17526	5109	Sisma Y SLD	0	40	0	0	2.3E2	1.059
17527	5110	Sisma X SLV	41.2	0	0	0	2.3E2	1.059	17528	5110	Sisma Y SLV	0	41.2	0	0	2.3E2	1.059
17529	5110	Sisma X SLD	40.6	0	0	0	2.3E2	1.059	17530	5110	Sisma Y SLD	0	40.6	0	0	2.3E2	1.059
17531	5111	Sisma X SLV	40.3	0	0	0	2.2E2	1.059	17532	5111	Sisma Y SLV	0	40.3	0	0	2.2E2	1.059
17533	5111	Sisma X SLD	39.7	0	0	0	2.2E2	1.059	17534	5111	Sisma Y SLD	0	39.7	0	0	2.2E2	1.059
17535	5112	Sisma X SLV	25.7	0	0	0	1.4E2	1.059	17536	5112	Sisma Y SLV	0	25.7	0	0	1.4E2	1.059
17537	5112	Sisma X SLD	25.3	0	0	0	1.4E2	1.059	17538	5112	Sisma Y SLD	0	25.3	0	0	1.4E2	1.059
17539	5113	Sisma X SLV	40.5	0	0	0	2.2E2	1.059	17540	5113	Sisma Y SLV	0	40.5	0	0	2.2E2	1.059
17541	5113	Sisma X SLD	39.8	0	0	0	2.2E2	1.059	17542	5113	Sisma Y SLD	0	39.8	0	0	2.2E2	1.059
17543	5114	Sisma X SLV	42.1	0	0	0	2.3E2	1.059	17544	5114	Sisma Y SLV	0	42.1	0	0	2.3E2	1.059
17545	5114	Sisma X SLD	41.5	0	0	0	2.3E2	1.059	17546	5114	Sisma Y SLD	0	41.5	0	0	2.3E2	1.059
17547	5115	Sisma X SLV	39.6	0	0	0	2.2E2	1.059	17548	5115	Sisma Y SLV	0	39.6	0	0	2.2E2	1.059
17549	5115	Sisma X SLD	38.9	0	0	0	2.2E2	1.059	17550	5115	Sisma Y SLD	0	38.9	0	0	2.2E2	1.059
17551	5116	Sisma X SLV	41.7	0	0	0	2.3E2	1.059	17552	5116	Sisma Y SLV	0	41.7	0	0	2.3E2	1.059
17553	5116	Sisma X SLD	41	0	0	0	2.3E2	1.059	17554	5116	Sisma Y SLD	0	41	0	0	2.3E2	1.059
17555	5117	Sisma X SLV	42.3	0	0	0	2.3E2	1.059	17556	5117	Sisma Y SLV	0	42.3	0	0	2.3E2	1.059
17557	5117	Sisma X SLD	41.6	0	0	0	2.3E2	1.059	17558	5117	Sisma Y SLD	0	41.6	0	0	2.3E2	1.059
17559	5118	Sisma X SLV	25.8	0	0	0	1.4E2	1.059	17560	5118	Sisma Y SLV	0	25.8	0	0	1.4E2	1.059
17561	5118	Sisma X SLD	25.3	0	0	0	1.4E2	1.059	17562	5118	Sisma Y SLD	0	25.3	0	0	1.4E2	1.059
17563	5119	Sisma X SLV	25.8	0	0	0	1.4E2	1.059	17564	5119	Sisma Y SLV	0	25.8	0	0	1.4E2	1.059
17565	5119	Sisma X SLD	25.4	0	0	0	1.4E2	1.059	17566	5119	Sisma Y SLD	0	25.4	0	0	1.4E2	1.059
17567	5120	Sisma X SLV	38.4	0	0	0	212.23	1.059	17568	5120	Sisma Y SLV	0	38.4	0	0	212.23	1.059
17569	5120	Sisma X SLD	37.7	0	0	0	212.23	1.059	17570	5120	Sisma Y SLD	0	37.7	0	0	212.23	1.059
17571	5121	Sisma X SLV	38.4	0	0	0	2.1E2	1.059	17572	5121	Sisma Y SLV	0	38.4	0	0	2.1E2	1.059
17573	5121	Sisma X SLD	37.8	0	0	0	2.1E2	1.059	17574	5121	Sisma Y SLD	0	37.8	0	0	2.1E2	1.059
17575	5122	Sisma X SLV	41.1	0	0	0	2.3E2	1.059	17576	5122	Sisma Y SLV	0	41.1	0	0	2.3E2	1.059
17577	5122	Sisma X SLD	40.5	0	0	0	2.3E2	1.059	17578	5122	Sisma Y SLD	0	40.5	0	0	2.3E2	1.059
17579	5123	Sisma X SLV	40.2	0	0	0	222.21	1.059	17580	5123	Sisma Y SLV	0	40.2	0	0	222.21	1.059
17581	5123	Sisma X SLD	39.5	0	0	0	222.21	1.059	17582	5123	Sisma Y SLD	0	39.5	0	0	222.21	1.059
17583	5124	Sisma X SLV	43.8	0	0	0	2.4E2	1.059	17584	5124	Sisma Y SLV	0	43.8	0	0	2.4E2	1.059
17585	5124	Sisma X SLD	43.1	0	0	0	2.4E2	1.059	17586	5124	Sisma Y SLD	0	43.1	0	0	2.4E2	1.059
17587	5125	Sisma X SLV	38.3	0	0	0	2.1E2	1.059	17588	5125	Sisma Y SLV	0	38.3	0	0	2.1E2	1.059
17589	5125	Sisma X SLD	37.7	0	0	0	2.1E2	1.059	17590	5125	Sisma Y SLD	0	37.7	0	0	2.1E2	1.059
17591	5126	Sisma X SLV	41.2	0	0	0	2.3E2	1.059	17592	5126	Sisma Y SLV	0	41.2	0	0	2.3E2	1.059
17593	5126	Sisma X SLD	40.6	0	0	0	2.3E2	1.059	17594	5126	Sisma Y SLD	0	40.6	0	0	2.3E2	1.059
17595	5127	Sisma X SLV	25.8	0	0	0	1.4E2	1.059	17596	5127	Sisma Y SLV	0	25.8	0	0	1.4E2	1.059
17597	5127	Sisma X SLD	25.4	0	0	0	1.4E2	1.059	17598	5127	Sisma Y SLD	0	25.4	0	0	1.4E2	1.059
17599	5128	Sisma X SLV	44.2	0	0	0	2.4E2	1.059	17600	5128	Sisma Y SLV	0	44.2	0	0	2.4E2	1.059
17601	5128	Sisma X SLD	43.5	0	0	0	2.4E2	1.059	17602	5128	Sisma Y SLD	0	43.5	0	0	2.4E2	1.059
17603	5129	Sisma X SLV	32.1	0	0	0	1.8E2	1.059	17604	5129	Sisma Y SLV	0	32.1	0	0	1.8E2	1.059
17605	5129	Sisma X SLD	31.6	0	0	0	1.8E2	1.059	17606	5129	Sisma Y SLD	0	31.6	0	0	1.8E2	1.059
17607	5130	Sisma X SLV	37.5	0	0	0	2.1E2	1.059	17608	5130	Sisma Y SLV	0	37.5	0	0	2.1E2	1.059
17609	5130	Sisma X SLD	36.9	0	0	0	2.1E2	1.059	17610	5130	Sisma Y SLD	0	36.9	0	0	2.1E2	1.059
17611	5131	Sisma X SLV	25.8	0	0	0	1.4E2	1.059	17612	5131	Sisma Y SLV	0	25.8	0	0	1.4E2	1.059
17613	5131	Sisma X SLD	25.4	0	0	0	1.4E2	1.059	17614	5131	Sisma Y SLD	0	25.4	0	0	1.4E2	1.059
17615	5132	Sisma X SLV	40.4	0	0	0	2.2E2	1.059	17616	5132	Sisma Y SLV	0	40.4	0	0	2.2E2	1.059
17617	5132	Sisma X SLD	39.8	0	0	0	2.2E2	1.059	17618	5132	Sisma Y SLD	0	39.8	0	0	2.2E2	1.059
17619	5133	Sisma X SLV	25.8	0	0	0	1.4E2	1.059	17620	5133	Sisma Y SLV	0	25.8	0	0	1.4E2	1.059
17621	5133	Sisma X SLD	25.4	0	0	0	1.4E2	1.059	17622	5133	Sisma Y SLD	0	25.4	0	0	1.4E2	1.059
17623	5134	Sisma X SLV	44.1	0	0	0	2.4E2	1.059	17624	5134	Sisma Y SLV	0	44.1	0	0	2.4E2	1.059
17625	5134	Sisma X SLD	43.4	0	0	0	2.4E2	1.059	17626	5134	Sisma Y SLD	0	43.4	0	0	2.4E2	1.059
17627	5135	Sisma X SLV	44.4	0	0	0	2.5E2	1.059	17628	5135	Sisma Y SLV	0	44.4	0	0	2.5E2	1.059
17629	5135	Sisma X SLD	43.7	0	0	0	2.5E2	1.059	17630	5135	Sisma Y SLD	0	43.7	0	0	2.5E2	1.059
17631	5136	Sisma X SLV	44.4	0	0	0	2.5E2	1.059	17632	5136	Sisma Y SLV	0	44.4	0	0	2.5E2	1.059
17633	5136	Sisma X SLD	43.7	0	0	0	2.5E2	1.059	17634	5136	Sisma Y SLD	0	43.7	0	0	2.5E2	1.059
17635	5137	Sisma X SLV	30.2	0	0	0	1.7E2	1.059	17636	5137	Sisma Y SLV	0	30.2	0	0	1.7E2	1.059
17637	5137	Sisma X SLD	29.8	0	0	0	1.7E2	1.059	17638	5137	Sisma Y SLD	0	29.8	0	0	1.7E2	1.059
17639	5138	Sisma X SLV	30.2	0	0	0	1.7E2	1.059	17640	5138	Sisma Y SLV	0	30.2	0	0	1.7E2	1.059
17641	5138	Sisma X SLD	29.8	0	0	0	1.7E2	1.059	17642	5138	Sisma Y SLD	0	29.8	0	0	1.7E2	1.059
17643	5139	Sisma X SLV	25.8	0	0	0	1.4E2	1.059	17644	5139	Sisma Y SLV	0	25.8	0	0	1.4E2	1.059
17645	5139	Sisma X SLD	25.4	0	0	0	1.4E2	1.059	17646	5139	Sisma Y SLD	0	25.4	0	0	1.4E2	1.059
17647	5140	Sisma X SLV	41.7	0	0	0	2.3E2	1.06	17648	5140	Sisma Y SLV	0	41.7	0	0	2.3E2	1.06
17649	5140	Sisma X SLD	41	0	0	0	2.3E2	1.06	17650	5140	Sisma Y SLD	0	41	0	0	2.3E2	1.06
17651	5141	Sisma X SLV	39.3	0	0	0	2.2E2	1.06	17652	5141	Sisma Y SLV	0	39.3	0	0	2.2E2	1.06
17653	5141	Sisma X SLD	38.6	0	0	0	2.2E2	1.06	17654	5141	Sisma Y SLD	0	38.6	0	0	2.2E2	1.06
17655	5142	Sisma X SLV	39.6	0	0	0	2.2E2	1.06	17656	5142	Sisma Y SLV	0	39.6	0	0	2.2E2	1.06
17657	5142	Sisma X SLD	38.9	0	0	0	2.2E2	1.06	17658	5142	Sisma Y SLD	0	38.9	0	0	2.2E2	1.06
17659	5143	Sisma X SLV	35.6	0	0	0	2.0E2	1.06	17660	5143	Sisma Y SLV	0	35.6	0	0	2.0E2	1.06
17661	5143	Sisma X SLD	35.1	0	0	0	2.0E2	1.06	17662	5143	Sisma Y SLD	0	35.1	0	0	2.0E2	1.06
17663	5144	Sisma X SLV	35.7	0	0	0	197.72	1.06	17664	5144	Sisma Y SLV	0	35.7	0	0	197.72	1.06
17665	5144	Sisma X SLD	35.2	0	0	0	197.72	1.06	17666	5144	Sisma Y SLD	0	35.2	0	0	197.72	1.06
17667	5145	Sisma X SLV	36.4	0	0	0	2.0E2	1.06	17668	5145	Sisma Y SLV	0	36.4	0	0	2.0E2	1.06
17669	5145	Sisma X SLD	35.8	0	0	0	2.0E2	1.06	17670	5145	Sisma Y SLD	0	35.8	0	0	2.0E2	1.06
17671	5146	Sisma X SLV	39.8	0	0	0	2.2E2	1.06	17672	5146	Sisma Y SLV	0	39.8	0	0	2.2E2	1.06
17673	5146	Sisma X SLD	39.1	0	0	0	2.2E2	1.06	17674	5146	Sisma Y SLD	0	39.1	0	0	2.2E2	1.06
17675	5147	Sisma X SLV	45.8	0	0	0	2.5E2	1.06	17676	5147	Sisma Y SLV	0	45.8	0	0	2.5E2	1.06
17677	5147	Sisma X SLD	45.1	0	0	0	2.5E2	1.06	17678	5147	Sisma Y SLD	0	45.1	0	0	2.5E2	1.06
17679	5148	Sisma X SLV	25.8	0	0	0	142.84	1.06	17680	5148	Sisma Y SLV	0	25.8	0	0	142.84	1.06
17681	5148	Sisma X SLD	25.4	0	0	0	142.84	1.06	17682	5148	Sisma Y SLD	0	25.4	0	0	142.84	1.06
17683	5149	Sisma X SLV	47.2	0	0	0	2.6E2	1.06	17684	5149	Sisma Y SLV	0	47.2	0	0	2.6E2	1.06
17685	5149	Sisma X SLD	46.4	0	0	0	2.6E2	1.06	17686	5149	Sisma Y SLD	0	46.4	0	0	2.6E2	1.06
17687	5150	Sisma X SLV	25.9	0	0	0	1.4E2	1.06	17688	5150	Sisma Y SLV	0	25.9	0	0	1.4E2	1.06
17689	5150	Sisma X SLD	25.5	0	0	0	1.4E2	1.06	17690	5150	Sisma Y SLD	0	25.5	0	0	1.4E2	1.06
17691	5151	Sisma X SLV	30.9	0	0	0	1.7E2	1.06	17692	5151	Sisma Y SLV	0	30.9	0	0	1.7E2	1.06
17693	5151	Sisma X SLD	30.4	0	0	0	1.7E2	1.06	17694	5151	Sisma Y SLD	0	30.4	0	0	1.7E2	1.06
17695	5152	Sisma X SLV	36.5	0	0	0	2.0E2	1.06	17696	5152	Sisma Y SLV	0	36.5	0	0	2.0E2	1.06
17697	5152	Sisma X SLD	35.9	0	0	0	2.0E2	1.06	17698	5152	Sisma Y SLD	0	35.9	0	0	2.0E2	1.06
17699	5153	Sisma X SLV	37.7	0	0	0	2.1E2	1.06	17700	5153	Sisma Y SLV	0	37.7	0	0	2.1E2	1.06
17701	5153	Sisma X SLD	37.1	0	0	0	2.1E2	1.06	17702	5153	Sisma Y SLD	0	37.1	0	0	2.1E2	1.06
17703	5154	Sisma X SLV	26	0	0	0	1.4E2	1.06	17704	5154	Sisma Y SLV	0	26	0	0	1.4E2	1.06
17705	5154	Sisma X SLD	25.6	0	0	0	1.4E2	1.06	17706	5154	Sisma Y SLD	0	25.6	0	0	1.4E2	1.06
17707	5155	Sisma X SLV	41.5	0	0	0	2.3E2	1.06	17708	5155	Sisma Y SLV	0	41.5	0	0	2.3E2	1.06
17709	5155	Sisma X SLD	40.8	0	0	0	2.3E2	1.06	17710	5155	Sisma Y SLD	0	40.8	0	0	2.3E2	1.06
17711	5156	Sisma X SLV	41	0	0	0	2.3E2	1.06	17712	5156	Sisma Y SLV	0	41	0	0	2.3E2	1.06
17713	5156	Sisma X SLD	40.4	0	0	0	2.3E2	1.06	17714	5156	Sisma Y SLD	0	40.4	0	0	2.3E2	1.06
17715	5157	Sisma X SLV	42	0	0	0	232.41	1.06	17716	5157	Sisma Y SLV	0	42	0	0	232.41	1.06
17717	5157	Sisma X SLD	41.4	0	0	0	232.41	1.06	17718	5157	Sisma Y SLD	0	41.4	0	0	232.41	1.06
17719	5158	Sisma X SLV	44.5	0	0	0	2.5E2	1.06	17720	5158	Sisma Y SLV	0	44.5	0	0	2.5E2	1.06
17721	5158	Sisma X SLD	43.8	0	0	0	2.5E2	1.06	17722	5158	Sisma Y SLD	0	43.8	0	0	2.5E2	1.06
17723	5159	Sisma X SLV	44.6	0	0	0	2.5E2	1.06	17724	5159	Sisma Y SLV	0	44.6	0	0	2.5E2	1.06
17725	5159	Sisma X SLD	43.8	0	0	0	2.5E2	1.06	17726	5159	Sisma Y SLD	0	43.8	0	0	2.5E2	1.06

Indice	Nodo	Condizione	Fx	Fy	Fz	Mz	Peso	Gamma	Indice	Nodo	Condizione	Fx	Fy	Fz	Mz	Peso	Gamma
17727	5160	Sisma X SLV	26.3	0	0	0	1.5E2	1.06	17728	5160	Sisma Y SLV	0	26.3	0	0	1.5E2	1.06
17729	5160	Sisma X SLD	25.9	0	0	0	1.5E2	1.06	17730	5160	Sisma Y SLD	0	25.9	0	0	1.5E2	1.06
17731	5161	Sisma X SLV	40.7	0	0	0	2.3E2	1.06	17732	5161	Sisma Y SLV	0	40.7	0	0	2.3E2	1.06
17733	5161	Sisma X SLD	40.1	0	0	0	2.3E2	1.06	17734	5161	Sisma Y SLD	0	40.1	0	0	2.3E2	1.06
17735	5162	Sisma X SLV	43.8	0	0	0	242.03	1.06	17736	5162	Sisma Y SLV	0	43.8	0	0	242.03	1.06
17737	5162	Sisma X SLD	43.1	0	0	0	242.03	1.06	17738	5162	Sisma Y SLD	0	43.1	0	0	242.03	1.06
17739	5163	Sisma X SLV	43.8	0	0	0	2.4E2	1.06	17740	5163	Sisma Y SLV	0	43.8	0	0	2.4E2	1.06
17741	5163	Sisma X SLD	43.1	0	0	0	2.4E2	1.06	17742	5163	Sisma Y SLD	0	43.1	0	0	2.4E2	1.06
17743	5164	Sisma X SLV	42.8	0	0	0	2.4E2	1.06	17744	5164	Sisma Y SLV	0	42.8	0	0	2.4E2	1.06
17745	5164	Sisma X SLD	42.1	0	0	0	2.4E2	1.06	17746	5164	Sisma Y SLD	0	42.1	0	0	2.4E2	1.06
17747	5165	Sisma X SLV	35.2	0	0	0	1.9E2	1.06	17748	5165	Sisma Y SLV	0	35.2	0	0	1.9E2	1.06
17749	5165	Sisma X SLD	34.6	0	0	0	1.9E2	1.06	17750	5165	Sisma Y SLD	0	34.6	0	0	1.9E2	1.06
17751	5166	Sisma X SLV	43.4	0	0	0	239.8	1.06	17752	5166	Sisma Y SLV	0	43.4	0	0	239.8	1.06
17753	5166	Sisma X SLD	42.7	0	0	0	239.8	1.06	17754	5166	Sisma Y SLD	0	42.7	0	0	239.8	1.06
17755	5167	Sisma X SLV	43.4	0	0	0	2.4E2	1.06	17756	5167	Sisma Y SLV	0	43.4	0	0	2.4E2	1.06
17757	5167	Sisma X SLD	42.7	0	0	0	2.4E2	1.06	17758	5167	Sisma Y SLD	0	42.7	0	0	2.4E2	1.06
17759	5168	Sisma X SLV	40.5	0	0	0	2.2E2	1.06	17760	5168	Sisma Y SLV	0	40.5	0	0	2.2E2	1.06
17761	5168	Sisma X SLD	39.9	0	0	0	2.2E2	1.06	17762	5168	Sisma Y SLD	0	39.9	0	0	2.2E2	1.06
17763	5169	Sisma X SLV	45.7	0	0	0	2.5E2	1.06	17764	5169	Sisma Y SLV	0	45.7	0	0	2.5E2	1.06
17765	5169	Sisma X SLD	45	0	0	0	2.5E2	1.06	17766	5169	Sisma Y SLD	0	45	0	0	2.5E2	1.06
17767	5170	Sisma X SLV	45.7	0	0	0	2.5E2	1.06	17768	5170	Sisma Y SLV	0	45.7	0	0	2.5E2	1.06
17769	5170	Sisma X SLD	45	0	0	0	2.5E2	1.06	17770	5170	Sisma Y SLD	0	45	0	0	2.5E2	1.06
17771	5171	Sisma X SLV	26.7	0	0	0	147.86	1.06	17772	5171	Sisma Y SLV	0	26.7	0	0	147.86	1.06
17773	5171	Sisma X SLD	26.3	0	0	0	147.86	1.06	17774	5171	Sisma Y SLD	0	26.3	0	0	147.86	1.06
17775	5172	Sisma X SLV	43.8	0	0	0	241.9	1.06	17776	5172	Sisma Y SLV	0	43.8	0	0	241.9	1.06
17777	5172	Sisma X SLD	43.1	0	0	0	241.9	1.06	17778	5172	Sisma Y SLD	0	43.1	0	0	241.9	1.06
17779	5173	Sisma X SLV	43.2	0	0	0	2.4E2	1.06	17780	5173	Sisma Y SLV	0	43.2	0	0	2.4E2	1.06
17781	5173	Sisma X SLD	42.5	0	0	0	2.4E2	1.06	17782	5173	Sisma Y SLD	0	42.5	0	0	2.4E2	1.06
17783	5174	Sisma X SLV	43.2	0	0	0	238.98	1.06	17784	5174	Sisma Y SLV	0	43.2	0	0	238.98	1.06
17785	5174	Sisma X SLD	42.5	0	0	0	238.98	1.06	17786	5174	Sisma Y SLD	0	42.5	0	0	238.98	1.06
17787	5175	Sisma X SLV	40.5	0	0	0	2.2E2	1.06	17788	5175	Sisma Y SLV	0	40.5	0	0	2.2E2	1.06
17789	5175	Sisma X SLD	39.8	0	0	0	2.2E2	1.06	17790	5175	Sisma Y SLD	0	39.8	0	0	2.2E2	1.06
17791	5176	Sisma X SLV	27.2	0	0	0	1.5E2	1.06	17792	5176	Sisma Y SLV	0	27.2	0	0	1.5E2	1.06
17793	5176	Sisma X SLD	26.8	0	0	0	1.5E2	1.06	17794	5176	Sisma Y SLD	0	26.8	0	0	1.5E2	1.06
17795	5177	Sisma X SLV	46.2	0	0	0	2.6E2	1.06	17796	5177	Sisma Y SLV	0	46.2	0	0	2.6E2	1.06
17797	5177	Sisma X SLD	45.5	0	0	0	2.6E2	1.06	17798	5177	Sisma Y SLD	0	45.5	0	0	2.6E2	1.06
17799	5178	Sisma X SLV	47.1	0	0	0	2.6E2	1.06	17800	5178	Sisma Y SLV	0	47.1	0	0	2.6E2	1.06
17801	5178	Sisma X SLD	46.3	0	0	0	2.6E2	1.06	17802	5178	Sisma Y SLD	0	46.3	0	0	2.6E2	1.06
17803	5179	Sisma X SLV	45.6	0	0	0	2.5E2	1.06	17804	5179	Sisma Y SLV	0	45.6	0	0	2.5E2	1.06
17805	5179	Sisma X SLD	44.9	0	0	0	2.5E2	1.06	17806	5179	Sisma Y SLD	0	44.9	0	0	2.5E2	1.06
17807	5180	Sisma X SLV	48.5	0	0	0	2.7E2	1.06	17808	5180	Sisma Y SLV	0	48.5	0	0	2.7E2	1.06
17809	5180	Sisma X SLD	47.8	0	0	0	2.7E2	1.06	17810	5180	Sisma Y SLD	0	47.8	0	0	2.7E2	1.06
17811	5181	Sisma X SLV	45.3	0	0	0	2.5E2	1.06	17812	5181	Sisma Y SLV	0	45.3	0	0	2.5E2	1.06
17813	5181	Sisma X SLD	44.6	0	0	0	2.5E2	1.06	17814	5181	Sisma Y SLD	0	44.6	0	0	2.5E2	1.06
17815	5182	Sisma X SLV	37.1	0	0	0	2.1E2	1.06	17816	5182	Sisma Y SLV	0	37.1	0	0	2.1E2	1.06
17817	5182	Sisma X SLD	36.5	0	0	0	2.1E2	1.06	17818	5182	Sisma Y SLD	0	36.5	0	0	2.1E2	1.06
17819	5183	Sisma X SLV	34.5	0	0	0	1.9E2	1.06	17820	5183	Sisma Y SLV	0	34.5	0	0	1.9E2	1.06
17821	5183	Sisma X SLD	33.9	0	0	0	1.9E2	1.06	17822	5183	Sisma Y SLD	0	33.9	0	0	1.9E2	1.06
17823	5184	Sisma X SLV	26.4	0	0	0	1.5E2	1.06	17824	5184	Sisma Y SLV	0	26.4	0	0	1.5E2	1.06
17825	5184	Sisma X SLD	25.9	0	0	0	1.5E2	1.06	17826	5184	Sisma Y SLD	0	25.9	0	0	1.5E2	1.06
17827	5185	Sisma X SLV	26.4	0	0	0	1.5E2	1.06	17828	5185	Sisma Y SLV	0	26.4	0	0	1.5E2	1.06
17829	5185	Sisma X SLD	25.9	0	0	0	1.5E2	1.06	17830	5185	Sisma Y SLD	0	25.9	0	0	1.5E2	1.06
17831	5186	Sisma X SLV	26.4	0	0	0	1.5E2	1.06	17832	5186	Sisma Y SLV	0	26.4	0	0	1.5E2	1.06
17833	5186	Sisma X SLD	25.9	0	0	0	1.5E2	1.06	17834	5186	Sisma Y SLD	0	25.9	0	0	1.5E2	1.06
17835	5187	Sisma X SLV	26.4	0	0	0	1.5E2	1.06	17836	5187	Sisma Y SLV	0	26.4	0	0	1.5E2	1.06
17837	5187	Sisma X SLD	25.9	0	0	0	1.5E2	1.06	17838	5187	Sisma Y SLD	0	25.9	0	0	1.5E2	1.06
17839	5188	Sisma X SLV	26.4	0	0	0	145.7	1.06	17840	5188	Sisma Y SLV	0	26.4	0	0	145.7	1.06
17841	5188	Sisma X SLD	25.9	0	0	0	145.7	1.06	17842	5188	Sisma Y SLD	0	25.9	0	0	145.7	1.06
17843	5189	Sisma X SLV	26.4	0	0	0	1.5E2	1.06	17844	5189	Sisma Y SLV	0	26.4	0	0	1.5E2	1.06
17845	5189	Sisma X SLD	25.9	0	0	0	1.5E2	1.06	17846	5189	Sisma Y SLD	0	25.9	0	0	1.5E2	1.06
17847	5190	Sisma X SLV	26.4	0	0	0	1.5E2	1.06	17848	5190	Sisma Y SLV	0	26.4	0	0	1.5E2	1.06
17849	5190	Sisma X SLD	26	0	0	0	1.5E2	1.06	17850	5190	Sisma Y SLD	0	26	0	0	1.5E2	1.06
17851	5191	Sisma X SLV	26.5	0	0	0	1.5E2	1.06	17852	5191	Sisma Y SLV	0	26.5	0	0	1.5E2	1.06
17853	5191	Sisma X SLD	26.1	0	0	0	1.5E2	1.06	17854	5191	Sisma Y SLD	0	26.1	0	0	1.5E2	1.06
17855	5192	Sisma X SLV	26.8	0	0	0	148.24	1.06	17856	5192	Sisma Y SLV	0	26.8	0	0	148.24	1.06
17857	5192	Sisma X SLD	26.4	0	0	0	148.24	1.06	17858	5192	Sisma Y SLD	0	26.4	0	0	148.24	1.06
17859	5193	Sisma X SLV	26.4	0	0	0	1.5E2	1.06	17860	5193	Sisma Y SLV	0	26.4	0	0	1.5E2	1.06
17861	5193	Sisma X SLD	25.9	0	0	0	1.5E2	1.06	17862	5193	Sisma Y SLD	0	25.9	0	0	1.5E2	1.06
17863	5194	Sisma X SLV	27.2	0	0	0	1.5E2	1.06	17864	5194	Sisma Y SLV	0	27.2	0	0	1.5E2	1.06
17865	5194	Sisma X SLD	26.8	0	0	0	1.5E2	1.06	17866	5194	Sisma Y SLD	0	26.8	0	0	1.5E2	1.06
17867	5195	Sisma X SLV	26.4	0	0	0	1.5E2	1.06	17868	5195	Sisma Y SLV	0	26.4	0	0	1.5E2	1.06
17869	5195	Sisma X SLD	25.9	0	0	0	1.5E2	1.06	17870	5195	Sisma Y SLD	0	25.9	0	0	1.5E2	1.06
17871	5196	Sisma X SLV	27.7	0	0	0	153.09	1.06	17872	5196	Sisma Y SLV	0	27.7	0	0	153.09	1.06
17873	5196	Sisma X SLD	27.3	0	0	0	153.09	1.06	17874	5196	Sisma Y SLD	0	27.3	0	0	153.09	1.06
17875	5197	Sisma X SLV	27	0	0	0	1.5E2	1.06	17876	5197	Sisma Y SLV	0	27	0	0	1.5E2	1.06
17877	5197	Sisma X SLD	26.6	0	0	0	1.5E2	1.06	17878	5197	Sisma Y SLD	0	26.6	0	0	1.5E2	1.06
17879	5198	Sisma X SLV	19.7	0	0	0	1.1E2	1.06	17880	5198	Sisma Y SLV	0	19.7	0	0	1.1E2	1.06
17881	5198	Sisma X SLD	19.4	0	0	0	1.1E2	1.06	17882	5198	Sisma Y SLD	0	19.4	0	0	1.1E2	1.06
17883	5199	Sisma X SLV	19.7	0	0	0	1.1E2	1.06	17884	5199	Sisma Y SLV	0	19.7	0	0	1.1E2	1.06
17885	5199	Sisma X SLD	19.4	0	0	0	1.1E2	1.06	17886	5199	Sisma Y SLD	0	19.4	0	0	1.1E2	1.06
17887	5200	Sisma X SLV	19.8	0	0	0	1.1E2	1.06	17888	5200	Sisma Y SLV	0	19.8	0	0	1.1E2	1.06
17889	5200	Sisma X SLD	19.5	0	0	0	1.1E2	1.06	17890	5200	Sisma Y SLD	0	19.5	0	0	1.1E2	1.06
17891	5201	Sisma X SLV	34.8	0	0	0	192.23	1.06	17892	5201	Sisma Y SLV	0	34.8	0	0	192.23	1.06
17893	5201	Sisma X SLD	34.2	0	0	0	192.23	1.06	17894	5201	Sisma Y SLD	0	34.2	0	0	192.23	1.06
17895	5202	Sisma X SLV	30.9	0	0	0	1.7E2	1.06	17896	5202	Sisma Y SLV	0	30.9	0	0	1.7E2	1.06
17897	5202	Sisma X SLD	30.4	0	0	0	1.7E2	1.06	17898	5202	Sisma Y SLD	0	30.4	0	0	1.7E2	1.06
17899	5203	Sisma X SLV	20.5	0	0	0	1.1E2	1.06	17900	5203	Sisma Y SLV	0	20.5	0	0	1.1E2	1.06
17901	5203	Sisma X SLD	20.2	0	0	0	1.1E2	1.06	17902	5203	Sisma Y SLD	0	20.2	0	0	1.1E2	1.06
17903	5204	Sisma X SLV	20.7	0	0	0	1.1E2	1.06	17904	5204	Sisma Y SLV	0	20.7	0	0	1.1E2	1.06
17905	5204	Sisma X SLD	20.4	0	0	0	1.1E2	1.06	17906	5204	Sisma Y SLD	0	20.4	0	0	1.1E2	1.06
17907	5205	Sisma X SLV	31.3	0	0	0	1.7E2	1.06	17908	5205	Sisma Y SLV	0	31.3	0	0	1.7E2	1.06
17909	5205	Sisma X SLD	30.8	0	0	0	1.7E2	1.06	17910	5205	Sisma Y SLD	0	30.8	0	0	1.7E2	1.06
17911	5206	Sisma X SLV	30.4	0	0	0	1.7E2	1.06	17912	5206	Sisma Y SLV	0	30.4	0	0	1.7E2	1.06
17913	5206	Sisma X SLD	29.9	0	0	0	1.7E2	1.06	17914	5206	Sisma Y SLD	0	29.9	0	0	1.7E2	1.06
17915	5207	Sisma X SLV	20.8	0	0	0	1.2E2	1.06	17916	5207	Sisma Y SLV	0	20.8	0	0	1.2E2	1.06
17917	5207	Sisma X SLD	20.5	0	0	0	1.2E2	1.06	17918	5207	Sisma Y SLD	0	20.5	0	0	1.2E2	1.06
17919	5208	Sisma X SLV	21	0	0	0	1.2E2	1.06	17920	5208	Sisma Y SLV	0	21	0	0	1.2E2	1.06
17921	5208	Sisma X SLD	20.6	0	0	0	1.2E2	1.06	17922	5208	Sisma Y SLD	0	20.6	0	0	1.2E2	1.06
17923	5209	Sisma X SLV	32.8	0	0	0	1.8E2	1.06	17924	5209	Sisma Y SLV	0	32.8	0	0	1.8E2	1.06
17925	5209	Sisma X SLD	32.2	0	0	0	1.8E2	1.06	17926	5209	Sisma Y SLD	0	32.2	0	0	1.8E2	1.06
17927	5210	Sisma X SLV	28	0	0	0	1.5E2	1.06	17928	5210	Sisma Y SLV	0	28	0	0	1.5E2	1.06
17929	5210	Sisma X SLD	27.6	0	0	0	1.5E2	1.06	17930	5210	Sisma Y SLD	0	27.6	0	0	1.5E2	1.06
17931	5211	Sisma X SLV	28.2	0	0	0	1.6E2	1.06	17932	5211	Sisma Y SLV	0	28.2	0	0	1.6E2	1.06
17933	5211	Sisma X SLD	27.8	0	0	0	1.6E2	1.06	17934	5211	Sisma Y SLD	0	27.8	0	0	1.6E2	1.06

Indice	Nodo	Condizione	Fx	Fy	Fz	Mz	Peso	Gamma	Indice	Nodo	Condizione	Fx	Fy	Fz	Mz	Peso	Gamma
17935	5212	Sisma X SLV	20.7	0	0	0	114.48	1.06	17936	5212	Sisma Y SLV	0	20.7	0	0	114.48	1.06
17937	5212	Sisma X SLD	20.4	0	0	0	114.48	1.06	17938	5212	Sisma Y SLD	0	20.4	0	0	114.48	1.06
17939	5213	Sisma X SLV	20.6	0	0	0	1.1E2	1.06	17940	5213	Sisma Y SLV	0	20.6	0	0	1.1E2	1.06
17941	5213	Sisma X SLD	20.2	0	0	0	1.1E2	1.06	17942	5213	Sisma Y SLD	0	20.2	0	0	1.1E2	1.06
17943	5214	Sisma X SLV	20.7	0	0	0	1.1E2	1.06	17944	5214	Sisma Y SLV	0	20.7	0	0	1.1E2	1.06
17945	5214	Sisma X SLD	20.4	0	0	0	1.1E2	1.06	17946	5214	Sisma Y SLD	0	20.4	0	0	1.1E2	1.06
17947	5215	Sisma X SLV	20.9	0	0	0	1.2E2	1.06	17948	5215	Sisma Y SLV	0	20.9	0	0	1.2E2	1.06
17949	5215	Sisma X SLD	20.6	0	0	0	1.2E2	1.06	17950	5215	Sisma Y SLD	0	20.6	0	0	1.2E2	1.06
17951	5216	Sisma X SLV	29.5	0	0	0	1.6E2	1.06	17952	5216	Sisma Y SLV	0	29.5	0	0	1.6E2	1.06
17953	5216	Sisma X SLD	29	0	0	0	1.6E2	1.06	17954	5216	Sisma Y SLD	0	29	0	0	1.6E2	1.06
17955	5217	Sisma X SLV	34.7	0	0	0	1.9E2	1.06	17956	5217	Sisma Y SLV	0	34.7	0	0	1.9E2	1.06
17957	5217	Sisma X SLD	34.1	0	0	0	1.9E2	1.06	17958	5217	Sisma Y SLD	0	34.1	0	0	1.9E2	1.06
17959	5218	Sisma X SLV	28.2	0	0	0	1.6E2	1.06	17960	5218	Sisma Y SLV	0	28.2	0	0	1.6E2	1.06
17961	5218	Sisma X SLD	27.8	0	0	0	1.6E2	1.06	17962	5218	Sisma Y SLD	0	27.8	0	0	1.6E2	1.06
17963	5219	Sisma X SLV	25.1	0	0	0	1.4E2	1.06	17964	5219	Sisma Y SLV	0	25.1	0	0	1.4E2	1.06
17965	5219	Sisma X SLD	24.7	0	0	0	1.4E2	1.06	17966	5219	Sisma Y SLD	0	24.7	0	0	1.4E2	1.06
17967	5220	Sisma X SLV	38.4	0	0	0	2.1E2	1.06	17968	5220	Sisma Y SLV	0	38.4	0	0	2.1E2	1.06
17969	5220	Sisma X SLD	37.8	0	0	0	2.1E2	1.06	17970	5220	Sisma Y SLD	0	37.8	0	0	2.1E2	1.06
17971	5221	Sisma X SLV	62.2	0	0	0	3.4E2	1.06	17972	5221	Sisma Y SLV	0	62.2	0	0	3.4E2	1.06
17973	5221	Sisma X SLD	61.2	0	0	0	3.4E2	1.06	17974	5221	Sisma Y SLD	0	61.2	0	0	3.4E2	1.06
17975	5222	Sisma X SLV	29.9	0	0	0	1.7E2	1.06	17976	5222	Sisma Y SLV	0	29.9	0	0	1.7E2	1.06
17977	5222	Sisma X SLD	29.4	0	0	0	1.7E2	1.06	17978	5222	Sisma Y SLD	0	29.4	0	0	1.7E2	1.06
17979	5223	Sisma X SLV	35.2	0	0	0	194.37	1.06	17980	5223	Sisma Y SLV	0	35.2	0	0	194.37	1.06
17981	5223	Sisma X SLD	34.6	0	0	0	194.37	1.06	17982	5223	Sisma Y SLD	0	34.6	0	0	194.37	1.06
17983	5224	Sisma X SLV	23.6	0	0	0	1.3E2	1.06	17984	5224	Sisma Y SLV	0	23.6	0	0	1.3E2	1.06
17985	5224	Sisma X SLD	23.2	0	0	0	1.3E2	1.06	17986	5224	Sisma Y SLD	0	23.2	0	0	1.3E2	1.06
17987	5225	Sisma X SLV	20	0	0	0	1.1E2	1.06	17988	5225	Sisma Y SLV	0	20	0	0	1.1E2	1.06
17989	5225	Sisma X SLD	19.7	0	0	0	1.1E2	1.06	17990	5225	Sisma Y SLD	0	19.7	0	0	1.1E2	1.06
17991	5226	Sisma X SLV	19.9	0	0	0	1.1E2	1.06	17992	5226	Sisma Y SLV	0	19.9	0	0	1.1E2	1.06
17993	5226	Sisma X SLD	19.6	0	0	0	1.1E2	1.06	17994	5226	Sisma Y SLD	0	19.6	0	0	1.1E2	1.06
17995	5227	Sisma X SLV	24.1	0	0	0	1.3E2	1.06	17996	5227	Sisma Y SLV	0	24.1	0	0	1.3E2	1.06
17997	5227	Sisma X SLD	23.7	0	0	0	1.3E2	1.06	17998	5227	Sisma Y SLD	0	23.7	0	0	1.3E2	1.06
17999	5228	Sisma X SLV	19.9	0	0	0	1.1E2	1.06	18000	5228	Sisma Y SLV	0	19.9	0	0	1.1E2	1.06
18001	5228	Sisma X SLD	19.6	0	0	0	1.1E2	1.06	18002	5228	Sisma Y SLD	0	19.6	0	0	1.1E2	1.06
18003	5229	Sisma X SLV	43.1	0	0	0	2.4E2	1.06	18004	5229	Sisma Y SLV	0	43.1	0	0	2.4E2	1.06
18005	5229	Sisma X SLD	42.4	0	0	0	2.4E2	1.06	18006	5229	Sisma Y SLD	0	42.4	0	0	2.4E2	1.06
18007	5230	Sisma X SLV	30.8	0	0	0	1.7E2	1.06	18008	5230	Sisma Y SLV	0	30.8	0	0	1.7E2	1.06
18009	5230	Sisma X SLD	30.3	0	0	0	1.7E2	1.06	18010	5230	Sisma Y SLD	0	30.3	0	0	1.7E2	1.06
18011	5231	Sisma X SLV	20.9	0	0	0	115.5	1.06	18012	5231	Sisma Y SLV	0	20.9	0	0	115.5	1.06
18013	5231	Sisma X SLD	20.6	0	0	0	115.5	1.06	18014	5231	Sisma Y SLD	0	20.6	0	0	115.5	1.06
18015	5232	Sisma X SLV	20.9	0	0	0	115.5	1.06	18016	5232	Sisma Y SLV	0	20.9	0	0	115.5	1.06
18017	5232	Sisma X SLD	20.6	0	0	0	115.5	1.06	18018	5232	Sisma Y SLD	0	20.6	0	0	115.5	1.06
18019	5233	Sisma X SLV	54.3	0	0	0	3.0E2	1.06	18020	5233	Sisma Y SLV	0	54.3	0	0	3.0E2	1.06
18021	5233	Sisma X SLD	53.5	0	0	0	3.0E2	1.06	18022	5233	Sisma Y SLD	0	53.5	0	0	3.0E2	1.06
18023	5234	Sisma X SLV	57.4	0	0	0	3.2E2	1.06	18024	5234	Sisma Y SLV	0	57.4	0	0	3.2E2	1.06
18025	5234	Sisma X SLD	56.5	0	0	0	3.2E2	1.06	18026	5234	Sisma Y SLD	0	56.5	0	0	3.2E2	1.06
18027	5235	Sisma X SLV	56.6	0	0	0	3.1E2	1.06	18028	5235	Sisma Y SLV	0	56.6	0	0	3.1E2	1.06
18029	5235	Sisma X SLD	55.7	0	0	0	3.1E2	1.06	18030	5235	Sisma Y SLD	0	55.7	0	0	3.1E2	1.06
18031	5236	Sisma X SLV	65.2	0	0	0	3.6E2	1.06	18032	5236	Sisma Y SLV	0	65.2	0	0	3.6E2	1.06
18033	5236	Sisma X SLD	64.1	0	0	0	3.6E2	1.06	18034	5236	Sisma Y SLD	0	64.1	0	0	3.6E2	1.06
18035	5237	Sisma X SLV	33.9	0	0	0	1.9E2	1.06	18036	5237	Sisma Y SLV	0	33.9	0	0	1.9E2	1.06
18037	5237	Sisma X SLD	33.4	0	0	0	1.9E2	1.06	18038	5237	Sisma Y SLD	0	33.4	0	0	1.9E2	1.06
18039	5238	Sisma X SLV	33.4	0	0	0	1.8E2	1.06	18040	5238	Sisma Y SLV	0	33.4	0	0	1.8E2	1.06
18041	5238	Sisma X SLD	32.9	0	0	0	1.8E2	1.06	18042	5238	Sisma Y SLD	0	32.9	0	0	1.8E2	1.06
18043	5239	Sisma X SLV	21.1	0	0	0	116.91	1.06	18044	5239	Sisma Y SLV	0	21.1	0	0	116.91	1.06
18045	5239	Sisma X SLD	20.8	0	0	0	116.91	1.06	18046	5239	Sisma Y SLD	0	20.8	0	0	116.91	1.06
18047	5240	Sisma X SLV	21.2	0	0	0	1.2E2	1.06	18048	5240	Sisma Y SLV	0	21.2	0	0	1.2E2	1.06
18049	5240	Sisma X SLD	20.9	0	0	0	1.2E2	1.06	18050	5240	Sisma Y SLD	0	20.9	0	0	1.2E2	1.06
18051	5241	Sisma X SLV	21.2	0	0	0	1.2E2	1.06	18052	5241	Sisma Y SLV	0	21.2	0	0	1.2E2	1.06
18053	5241	Sisma X SLD	20.9	0	0	0	1.2E2	1.06	18054	5241	Sisma Y SLD	0	20.9	0	0	1.2E2	1.06
18055	5242	Sisma X SLV	21.2	0	0	0	1.2E2	1.06	18056	5242	Sisma Y SLV	0	21.2	0	0	1.2E2	1.06
18057	5242	Sisma X SLD	20.9	0	0	0	1.2E2	1.06	18058	5242	Sisma Y SLD	0	20.9	0	0	1.2E2	1.06
18059	5243	Sisma X SLV	32.6	0	0	0	1.8E2	1.06	18060	5243	Sisma Y SLV	0	32.6	0	0	1.8E2	1.06
18061	5243	Sisma X SLD	32.1	0	0	0	1.8E2	1.06	18062	5243	Sisma Y SLD	0	32.1	0	0	1.8E2	1.06
18063	5244	Sisma X SLV	32.9	0	0	0	1.8E2	1.06	18064	5244	Sisma Y SLV	0	32.9	0	0	1.8E2	1.06
18065	5244	Sisma X SLD	32.3	0	0	0	1.8E2	1.06	18066	5244	Sisma Y SLD	0	32.3	0	0	1.8E2	1.06
18067	5245	Sisma X SLV	25.2	0	0	0	1.4E2	1.06	18068	5245	Sisma Y SLV	0	25.2	0	0	1.4E2	1.06
18069	5245	Sisma X SLD	24.8	0	0	0	1.4E2	1.06	18070	5245	Sisma Y SLD	0	24.8	0	0	1.4E2	1.06
18071	5246	Sisma X SLV	24.4	0	0	0	134.87	1.06	18072	5246	Sisma Y SLV	0	24.4	0	0	134.87	1.06
18073	5246	Sisma X SLD	24	0	0	0	134.87	1.06	18074	5246	Sisma Y SLD	0	24	0	0	134.87	1.06
18075	5247	Sisma X SLV	34.7	0	0	0	1.9E2	1.06	18076	5247	Sisma Y SLV	0	34.7	0	0	1.9E2	1.06
18077	5247	Sisma X SLD	34.1	0	0	0	1.9E2	1.06	18078	5247	Sisma Y SLD	0	34.1	0	0	1.9E2	1.06
18079	5248	Sisma X SLV	74.2	0	0	0	4.1E2	1.06	18080	5248	Sisma Y SLV	0	74.2	0	0	4.1E2	1.06
18081	5248	Sisma X SLD	73	0	0	0	4.1E2	1.06	18082	5248	Sisma Y SLD	0	73	0	0	4.1E2	1.06
18083	5249	Sisma X SLV	31.3	0	0	0	173.25	1.06	18084	5249	Sisma Y SLV	0	31.3	0	0	173.25	1.06
18085	5249	Sisma X SLD	30.8	0	0	0	173.25	1.06	18086	5249	Sisma Y SLD	0	30.8	0	0	173.25	1.06
18087	5250	Sisma X SLV	29.6	0	0	0	1.6E2	1.06	18088	5250	Sisma Y SLV	0	29.6	0	0	1.6E2	1.06
18089	5250	Sisma X SLD	29.1	0	0	0	1.6E2	1.06	18090	5250	Sisma Y SLD	0	29.1	0	0	1.6E2	1.06
18091	5251	Sisma X SLV	24.9	0	0	0	1.4E2	1.06	18092	5251	Sisma Y SLV	0	24.9	0	0	1.4E2	1.06
18093	5251	Sisma X SLD	24.5	0	0	0	1.4E2	1.06	18094	5251	Sisma Y SLD	0	24.5	0	0	1.4E2	1.06
18095	5252	Sisma X SLV	32.1	0	0	0	1.8E2	1.06	18096	5252	Sisma Y SLV	0	32.1	0	0	1.8E2	1.06
18097	5252	Sisma X SLD	31.6	0	0	0	1.8E2	1.06	18098	5252	Sisma Y SLD	0	31.6	0	0	1.8E2	1.06
18099	5253	Sisma X SLV	28.1	0	0	0	1.6E2	1.061	18100	5253	Sisma Y SLV	0	28.1	0	0	1.6E2	1.061
18101	5253	Sisma X SLD	27.6	0	0	0	1.6E2	1.061	18102	5253	Sisma Y SLD	0	27.6	0	0	1.6E2	1.061
18103	5254	Sisma X SLV	28.2	0	0	0	1.6E2	1.062	18104	5254	Sisma Y SLV	0	28.2	0	0	1.6E2	1.062
18105	5254	Sisma X SLD	27.7	0	0	0	1.6E2	1.062	18106	5254	Sisma Y SLD	0	27.7	0	0	1.6E2	1.062
18107	5255	Sisma X SLV	27.2	0	0	0	1.5E2	1.063	18108	5255	Sisma Y SLV	0	27.2	0	0	1.5E2	1.063
18109	5255	Sisma X SLD	26.7	0	0	0	1.5E2	1.063	18110	5255	Sisma Y SLD	0	26.7	0	0	1.5E2	1.063
18111	5256	Sisma X SLV	28.3	0	0	0	1.6E2	1.063	18112	5256	Sisma Y SLV	0	28.3	0	0	1.6E2	1.063
18113	5256	Sisma X SLD	27.9	0	0	0	1.6E2	1.063	18114	5256	Sisma Y SLD	0	27.9	0	0	1.6E2	1.063
18115	5257	Sisma X SLV	43.8	0	0	0	2.4E2	1.064	18116	5257	Sisma Y SLV	0	43.8	0	0	2.4E2	1.064
18117	5257	Sisma X SLD	43.1	0	0	0	2.4E2	1.064	18118	5257	Sisma Y SLD	0	43.1	0	0	2.4E2	1.064
18119	5258	Sisma X SLV	43.8	0	0	0	2.4E2	1.064	18120	5258	Sisma Y SLV	0	43.8	0	0	2.4E2	1.064
18121	5258	Sisma X SLD	43.1	0	0	0	2.4E2	1.064	18122	5258	Sisma Y SLD	0	43.1	0	0	2.4E2	1.064
18123	5259	Sisma X SLV	28.6	0	0	0	157.26	1.064	18124	5259	Sisma Y SLV	0	28.6	0	0	157.26	1.064
18125	5259	Sisma X SLD	28.1	0	0	0	157.26	1.064	18126	5259	Sisma Y SLD	0	28.1	0	0	157.26	1.064
18127	5260	Sisma X SLV	45.6	0	0	0	2.5E2	1.065	18128	5260	Sisma Y SLV	0	45.6	0	0	2.5E2	1.065
18129	5260	Sisma X SLD	44.9	0	0	0	2.5E2	1.065	18130	5260	Sisma Y SLD	0	44.9	0	0	2.5E2	1.065
18131	5261	Sisma X SLV	45.6	0	0	0	2.5E2	1.065	18132	5261	Sisma Y SLV	0	45.6	0	0	2.5E2	1.065
18133	5261	Sisma X SLD	44.9	0	0	0	2.5E2	1.065	18134	5261	Sisma Y SLD	0	44.9	0	0	2.5E2	1.065
18135	5262	Sisma X SLV	23.9	0	0	0	131.6	1.065	18136	5262	Sisma Y SLV	0	23.9	0	0	131.6	1.065

Indice	Nodo	Condizione	Fx	Fy	Fz	Mz	Peso	Gamma	Indice	Nodo	Condizione	Fx	Fy	Fz	Mz	Peso	Gamma
18137	5262	Sisma X SLD	23.5	0	0	0	131.6	1.065	18138	5262	Sisma Y SLD	0	23.5	0	0	131.6	1.065
18139	5263	Sisma X SLV	30	0	0	0	165.27	1.065	18140	5263	Sisma Y SLV	0	30	0	0	165.27	1.065
18141	5263	Sisma X SLD	29.6	0	0	0	165.27	1.065	18142	5263	Sisma Y SLD	0	29.6	0	0	165.27	1.065
18143	5264	Sisma X SLV	28.9	0	0	0	1.6E2	1.066	18144	5264	Sisma Y SLV	0	28.9	0	0	1.6E2	1.066
18145	5264	Sisma X SLD	28.5	0	0	0	1.6E2	1.066	18146	5264	Sisma Y SLD	0	28.5	0	0	1.6E2	1.066
18147	5265	Sisma X SLV	27.5	0	0	0	1.5E2	1.067	18148	5265	Sisma Y SLV	0	27.5	0	0	1.5E2	1.067
18149	5265	Sisma X SLD	27.1	0	0	0	1.5E2	1.067	18150	5265	Sisma Y SLD	0	27.1	0	0	1.5E2	1.067
18151	5266	Sisma X SLV	42.7	0	0	0	2.3E2	1.067	18152	5266	Sisma Y SLV	0	42.7	0	0	2.3E2	1.067
18153	5266	Sisma X SLD	42	0	0	0	2.3E2	1.067	18154	5266	Sisma Y SLD	0	42	0	0	2.3E2	1.067
18155	5267	Sisma X SLV	29.6	0	0	0	1.6E2	1.069	18156	5267	Sisma Y SLV	0	29.6	0	0	1.6E2	1.069
18157	5267	Sisma X SLD	29.1	0	0	0	1.6E2	1.069	18158	5267	Sisma Y SLD	0	29.1	0	0	1.6E2	1.069
18159	5268	Sisma X SLV	44.7	0	0	0	245.15	1.069	18160	5268	Sisma Y SLV	0	44.7	0	0	245.15	1.069
18161	5268	Sisma X SLD	44	0	0	0	245.15	1.069	18162	5268	Sisma Y SLD	0	44	0	0	245.15	1.069
18163	5269	Sisma X SLV	44.7	0	0	0	245.15	1.069	18164	5269	Sisma Y SLV	0	44.7	0	0	245.15	1.069
18165	5269	Sisma X SLD	44	0	0	0	245.15	1.069	18166	5269	Sisma Y SLD	0	44	0	0	245.15	1.069
18167	5270	Sisma X SLV	46.5	0	0	0	2.5E2	1.07	18168	5270	Sisma Y SLV	0	46.5	0	0	2.5E2	1.07
18169	5270	Sisma X SLD	45.8	0	0	0	2.5E2	1.07	18170	5270	Sisma Y SLD	0	45.8	0	0	2.5E2	1.07
18171	5271	Sisma X SLV	46.5	0	0	0	2.5E2	1.07	18172	5271	Sisma Y SLV	0	46.5	0	0	2.5E2	1.07
18173	5271	Sisma X SLD	45.8	0	0	0	2.5E2	1.07	18174	5271	Sisma Y SLD	0	45.8	0	0	2.5E2	1.07
18175	5272	Sisma X SLV	24.3	0	0	0	1.3E2	1.071	18176	5272	Sisma Y SLV	0	24.3	0	0	1.3E2	1.071
18177	5272	Sisma X SLD	23.9	0	0	0	1.3E2	1.071	18178	5272	Sisma Y SLD	0	23.9	0	0	1.3E2	1.071
18179	5273	Sisma X SLV	38.6	0	0	0	2.1E2	1.072	18180	5273	Sisma Y SLV	0	38.6	0	0	2.1E2	1.072
18181	5273	Sisma X SLD	38	0	0	0	2.1E2	1.072	18182	5273	Sisma Y SLD	0	38	0	0	2.1E2	1.072
18183	5274	Sisma X SLV	38.6	0	0	0	2.1E2	1.072	18184	5274	Sisma Y SLV	0	38.6	0	0	2.1E2	1.072
18185	5274	Sisma X SLD	38	0	0	0	2.1E2	1.072	18186	5274	Sisma Y SLD	0	38	0	0	2.1E2	1.072
18187	5275	Sisma X SLV	27.9	0	0	0	1.5E2	1.072	18188	5275	Sisma Y SLV	0	27.9	0	0	1.5E2	1.072
18189	5275	Sisma X SLD	27.5	0	0	0	1.5E2	1.072	18190	5275	Sisma Y SLD	0	27.5	0	0	1.5E2	1.072
18191	5276	Sisma X SLV	31	0	0	0	1.7E2	1.072	18192	5276	Sisma Y SLV	0	31	0	0	1.7E2	1.072
18193	5276	Sisma X SLD	30.5	0	0	0	1.7E2	1.072	18194	5276	Sisma Y SLD	0	30.5	0	0	1.7E2	1.072
18195	5277	Sisma X SLV	30.8	0	0	0	1.7E2	1.073	18196	5277	Sisma Y SLV	0	30.8	0	0	1.7E2	1.073
18197	5277	Sisma X SLD	30.3	0	0	0	1.7E2	1.073	18198	5277	Sisma Y SLD	0	30.3	0	0	1.7E2	1.073
18199	5278	Sisma X SLV	43.9	0	0	0	2.4E2	1.074	18200	5278	Sisma Y SLV	0	43.9	0	0	2.4E2	1.074
18201	5278	Sisma X SLD	43.2	0	0	0	2.4E2	1.074	18202	5278	Sisma Y SLD	0	43.2	0	0	2.4E2	1.074
18203	5279	Sisma X SLV	45.9	0	0	0	2.5E2	1.075	18204	5279	Sisma Y SLV	0	45.9	0	0	2.5E2	1.075
18205	5279	Sisma X SLD	45.2	0	0	0	2.5E2	1.075	18206	5279	Sisma Y SLD	0	45.2	0	0	2.5E2	1.075
18207	5280	Sisma X SLV	45.9	0	0	0	2.5E2	1.075	18208	5280	Sisma Y SLV	0	45.9	0	0	2.5E2	1.075
18209	5280	Sisma X SLD	45.2	0	0	0	2.5E2	1.075	18210	5280	Sisma Y SLD	0	45.2	0	0	2.5E2	1.075
18211	5281	Sisma X SLV	47.7	0	0	0	2.6E2	1.076	18212	5281	Sisma Y SLV	0	47.7	0	0	2.6E2	1.076
18213	5281	Sisma X SLD	46.9	0	0	0	2.6E2	1.076	18214	5281	Sisma Y SLD	0	46.9	0	0	2.6E2	1.076
18215	5282	Sisma X SLV	47.7	0	0	0	2.6E2	1.076	18216	5282	Sisma Y SLV	0	47.7	0	0	2.6E2	1.076
18217	5282	Sisma X SLD	46.9	0	0	0	2.6E2	1.076	18218	5282	Sisma Y SLD	0	46.9	0	0	2.6E2	1.076
18219	5283	Sisma X SLV	22.8	0	0	0	1.2E2	1.077	18220	5283	Sisma Y SLV	0	22.8	0	0	1.2E2	1.077
18221	5283	Sisma X SLD	22.4	0	0	0	1.2E2	1.077	18222	5283	Sisma Y SLD	0	22.4	0	0	1.2E2	1.077
18223	5284	Sisma X SLV	28.5	0	0	0	1.5E2	1.077	18224	5284	Sisma Y SLV	0	28.5	0	0	1.5E2	1.077
18225	5284	Sisma X SLD	28	0	0	0	1.5E2	1.077	18226	5284	Sisma Y SLD	0	28	0	0	1.5E2	1.077
18227	5285	Sisma X SLV	12.5	0	0	0	67.785	1.078	18228	5285	Sisma Y SLV	0	12.5	0	0	67.785	1.078
18229	5285	Sisma X SLD	12.3	0	0	0	67.785	1.078	18230	5285	Sisma Y SLD	0	12.3	0	0	67.785	1.078
18231	5286	Sisma X SLV	16	0	0	0	87.032	1.078	18232	5286	Sisma Y SLV	0	16	0	0	87.032	1.078
18233	5286	Sisma X SLD	15.8	0	0	0	87.032	1.078	18234	5286	Sisma Y SLD	0	15.8	0	0	87.032	1.078
18235	5287	Sisma X SLV	56.5	0	0	0	3.1E2	1.078	18236	5287	Sisma Y SLV	0	56.5	0	0	3.1E2	1.078
18237	5287	Sisma X SLD	55.6	0	0	0	3.1E2	1.078	18238	5287	Sisma Y SLD	0	55.6	0	0	3.1E2	1.078
18239	5288	Sisma X SLV	48	0	0	0	260.95	1.078	18240	5288	Sisma Y SLV	0	48	0	0	260.95	1.078
18241	5288	Sisma X SLD	47.3	0	0	0	260.95	1.078	18242	5288	Sisma Y SLD	0	47.3	0	0	260.95	1.078
18243	5289	Sisma X SLV	48.2	0	0	0	2.6E2	1.079	18244	5289	Sisma Y SLV	0	48.2	0	0	2.6E2	1.079
18245	5289	Sisma X SLD	47.4	0	0	0	2.6E2	1.079	18246	5289	Sisma Y SLD	0	47.4	0	0	2.6E2	1.079
18247	5290	Sisma X SLV	32.1	0	0	0	1.7E2	1.08	18248	5290	Sisma Y SLV	0	32.1	0	0	1.7E2	1.08
18249	5290	Sisma X SLD	31.6	0	0	0	1.7E2	1.08	18250	5290	Sisma Y SLD	0	31.6	0	0	1.7E2	1.08
18251	5291	Sisma X SLV	45.3	0	0	0	2.5E2	1.081	18252	5291	Sisma Y SLV	0	45.3	0	0	2.5E2	1.081
18253	5291	Sisma X SLD	44.6	0	0	0	2.5E2	1.081	18254	5291	Sisma Y SLD	0	44.6	0	0	2.5E2	1.081
18255	5292	Sisma X SLV	47.4	0	0	0	2.6E2	1.082	18256	5292	Sisma Y SLV	0	47.4	0	0	2.6E2	1.082
18257	5292	Sisma X SLD	46.7	0	0	0	2.6E2	1.082	18258	5292	Sisma Y SLD	0	46.7	0	0	2.6E2	1.082
18259	5293	Sisma X SLV	47.4	0	0	0	2.6E2	1.082	18260	5293	Sisma Y SLV	0	47.4	0	0	2.6E2	1.082
18261	5293	Sisma X SLD	46.7	0	0	0	2.6E2	1.082	18262	5293	Sisma Y SLD	0	46.7	0	0	2.6E2	1.082
18263	5294	Sisma X SLV	49.3	0	0	0	2.7E2	1.082	18264	5294	Sisma Y SLV	0	49.3	0	0	2.7E2	1.082
18265	5294	Sisma X SLD	48.5	0	0	0	2.7E2	1.082	18266	5294	Sisma Y SLD	0	48.5	0	0	2.7E2	1.082
18267	5295	Sisma X SLV	49.3	0	0	0	2.7E2	1.082	18268	5295	Sisma Y SLV	0	49.3	0	0	2.7E2	1.082
18269	5295	Sisma X SLD	48.5	0	0	0	2.7E2	1.082	18270	5295	Sisma Y SLD	0	48.5	0	0	2.7E2	1.082
18271	5296	Sisma X SLV	29.2	0	0	0	1.6E2	1.083	18272	5296	Sisma Y SLV	0	29.2	0	0	1.6E2	1.083
18273	5296	Sisma X SLD	28.7	0	0	0	1.6E2	1.083	18274	5296	Sisma Y SLD	0	28.7	0	0	1.6E2	1.083
18275	5297	Sisma X SLV	40.7	0	0	0	220.06	1.085	18276	5297	Sisma Y SLV	0	40.7	0	0	220.06	1.085
18277	5297	Sisma X SLD	40.1	0	0	0	220.06	1.085	18278	5297	Sisma Y SLD	0	40.1	0	0	220.06	1.085
18279	5298	Sisma X SLV	40.7	0	0	0	220.06	1.085	18280	5298	Sisma Y SLV	0	40.7	0	0	220.06	1.085
18281	5298	Sisma X SLD	40.1	0	0	0	220.06	1.085	18282	5298	Sisma Y SLD	0	40.1	0	0	220.06	1.085
18283	5299	Sisma X SLV	33.6	0	0	0	1.8E2	1.089	18284	5299	Sisma Y SLV	0	33.6	0	0	1.8E2	1.089
18285	5299	Sisma X SLD	33	0	0	0	1.8E2	1.089	18286	5299	Sisma Y SLD	0	33	0	0	1.8E2	1.089
18287	5300	Sisma X SLV	47.1	0	0	0	2.5E2	1.089	18288	5300	Sisma Y SLV	0	47.1	0	0	2.5E2	1.089
18289	5300	Sisma X SLD	46.3	0	0	0	2.5E2	1.089	18290	5300	Sisma Y SLD	0	46.3	0	0	2.5E2	1.089
18291	5301	Sisma X SLV	49.4	0	0	0	2.7E2	1.089	18292	5301	Sisma Y SLV	0	49.4	0	0	2.7E2	1.089
18293	5301	Sisma X SLD	48.6	0	0	0	2.7E2	1.089	18294	5301	Sisma Y SLD	0	48.6	0	0	2.7E2	1.089
18295	5302	Sisma X SLV	49.4	0	0	0	2.7E2	1.089	18296	5302	Sisma Y SLV	0	49.4	0	0	2.7E2	1.089
18297	5302	Sisma X SLD	48.6	0	0	0	2.7E2	1.089	18298	5302	Sisma Y SLD	0	48.6	0	0	2.7E2	1.089
18299	5303	Sisma X SLV	51.3	0	0	0	2.8E2	1.09	18300	5303	Sisma Y SLV	0	51.3	0	0	2.8E2	1.09
18301	5303	Sisma X SLD	50.5	0	0	0	2.8E2	1.09	18302	5303	Sisma Y SLD	0	50.5	0	0	2.8E2	1.09
18303	5304	Sisma X SLV	51.3	0	0	0	2.8E2	1.09	18304	5304	Sisma Y SLV	0	51.3	0	0	2.8E2	1.09
18305	5304	Sisma X SLD	50.5	0	0	0	2.8E2	1.09	18306	5304	Sisma Y SLD	0	50.5	0	0	2.8E2	1.09
18307	5305	Sisma X SLV	30.2	0	0	0	1.6E2	1.09	18308	5305	Sisma Y SLV	0	30.2	0	0	1.6E2	1.09
18309	5305	Sisma X SLD	29.7	0	0	0	1.6E2	1.09	18310	5305	Sisma Y SLD	0	29.7	0	0	1.6E2	1.09
18311	5306	Sisma X SLV	18.8	0	0	0	1.0E2	1.092	18312	5306	Sisma Y SLV	0	18.8	0	0	1.0E2	1.092
18313	5306	Sisma X SLD	18.5	0	0	0	1.0E2	1.092	18314	5306	Sisma Y SLD	0	18.5	0	0	1.0E2	1.092
18315	5307	Sisma X SLV	49.5	0	0	0	2.7E2	1.092	18316	5307	Sisma Y SLV	0	49.5	0	0	2.7E2	1.092
18317	5307	Sisma X SLD	48.7	0	0	0	2.7E2	1.092	18318	5307	Sisma Y SLD	0	48.7	0	0	2.7E2	1.092
18319	5308	Sisma X SLV	47.2	0	0	0	2.5E2	1.092	18320	5308	Sisma Y SLV	0	47.2	0	0	2.5E2	1.092
18321	5308	Sisma X SLD	46.5	0	0	0	2.5E2	1.092	18322	5308	Sisma Y SLD	0	46.5	0	0	2.5E2	1.092
18323	5309	Sisma X SLV	49.9	0	0	0	2.7E2	1.093	18324	5309	Sisma Y SLV	0	49.9	0	0	2.7E2	1.093
18325	5309	Sisma X SLD	49.1	0	0	0	2.7E2	1.093	18326	5309	Sisma Y SLD	0	49.1	0	0	2.7E2	1.093
18327	5310	Sisma X SLV	48.3	0	0	0	2.6E2	1.094	18328	5310	Sisma Y SLV	0	48.3	0	0	2.6E2	1.094
18329	5310	Sisma X SLD	47.5	0	0	0	2.6E2	1.094	18330	5310	Sisma Y SLD	0	47.5	0	0	2.6E2	1.094
18331	5311	Sisma X SLV	44.6	0	0	0	2.4E2	1.095	18332	5311	Sisma Y SLV	0	44.6	0	0	2.4E2	1.095
18333	5311	Sisma X SLD	43.9	0	0	0	2.4E2	1.095	18334	5311	Sisma Y SLD	0	43.9	0	0	2.4E2	1.095
18335	5312	Sisma X SLV	25.7	0	0	0	1.4E2	1.095	18336	5312	Sisma Y SLV	0	25.7	0	0	1.4E2	1.095
18337	5312	Sisma X SLD	25.3	0	0	0	1.4E2	1.095	18338	5312	Sisma Y SLD	0	25.3	0	0	1.4E2	1.095
18339	5313	Sisma X SLV	46.3	0	0	0	2.5E2	1.096	18340	5313	Sisma Y SLV	0	46.3	0	0	2.5E2	1.096
18341	5313	Sisma X SLD	45.5	0	0	0	2.5E2	1.096	18342	5313	Sisma Y SLD	0	45.5	0	0	2.5E2	1.096
18343	5314	Sisma X SLV	30.2	0	0	0	1.6E2	1.098	18344	5314	Sisma Y SLV	0	30.2	0	0	1.6E2	1.098

Indice	Nodo	Condizione	Fx	Fy	Fz	Mz	Peso	Gamma	Indice	Nodo	Condizione	Fx	Fy	Fz	Mz	Peso	Gamma
18345	5314	Sisma X SLD	29.7	0	0	0	1.6E2	1.098	18346	5314	Sisma Y SLD	0	29.7	0	0	1.6E2	1.098
18347	5315	Sisma X SLV	24.3	0	0	0	1.3E2	1.098	18348	5315	Sisma Y SLV	0	24.3	0	0	1.3E2	1.098
18349	5315	Sisma X SLD	23.9	0	0	0	1.3E2	1.098	18350	5315	Sisma Y SLD	0	23.9	0	0	1.3E2	1.098
18351	5316	Sisma X SLV	21.3	0	0	0	1.1E2	1.098	18352	5316	Sisma Y SLV	0	21.3	0	0	1.1E2	1.098
18353	5316	Sisma X SLD	21	0	0	0	1.1E2	1.098	18354	5316	Sisma Y SLD	0	21	0	0	1.1E2	1.098
18355	5317	Sisma X SLV	21.3	0	0	0	1.1E2	1.098	18356	5317	Sisma Y SLV	0	21.3	0	0	1.1E2	1.098
18357	5317	Sisma X SLD	21	0	0	0	1.1E2	1.098	18358	5317	Sisma Y SLD	0	21	0	0	1.1E2	1.098
18359	5318	Sisma X SLV	25.6	0	0	0	1.4E2	1.098	18360	5318	Sisma Y SLV	0	25.6	0	0	1.4E2	1.098
18361	5318	Sisma X SLD	25.2	0	0	0	1.4E2	1.098	18362	5318	Sisma Y SLD	0	25.2	0	0	1.4E2	1.098
18363	5319	Sisma X SLV	25.6	0	0	0	1.4E2	1.098	18364	5319	Sisma Y SLV	0	25.6	0	0	1.4E2	1.098
18365	5319	Sisma X SLD	25.2	0	0	0	1.4E2	1.098	18366	5319	Sisma Y SLD	0	25.2	0	0	1.4E2	1.098
18367	5320	Sisma X SLV	17.4	0	0	0	92.857	1.098	18368	5320	Sisma Y SLV	0	17.4	0	0	92.857	1.098
18369	5320	Sisma X SLD	17.1	0	0	0	92.857	1.098	18370	5320	Sisma Y SLD	0	17.1	0	0	92.857	1.098
18371	5321	Sisma X SLV	15.6	0	0	0	83.046	1.098	18372	5321	Sisma Y SLV	0	15.6	0	0	83.046	1.098
18373	5321	Sisma X SLD	15.3	0	0	0	83.046	1.098	18374	5321	Sisma Y SLD	0	15.3	0	0	83.046	1.098
18375	5322	Sisma X SLV	21.1	0	0	0	1.1E2	1.098	18376	5322	Sisma Y SLV	0	21.1	0	0	1.1E2	1.098
18377	5322	Sisma X SLD	20.8	0	0	0	1.1E2	1.098	18378	5322	Sisma Y SLD	0	20.8	0	0	1.1E2	1.098
18379	5323	Sisma X SLV	21.1	0	0	0	1.1E2	1.098	18380	5323	Sisma Y SLV	0	21.1	0	0	1.1E2	1.098
18381	5323	Sisma X SLD	20.8	0	0	0	1.1E2	1.098	18382	5323	Sisma Y SLD	0	20.8	0	0	1.1E2	1.098
18383	5324	Sisma X SLV	26.5	0	0	0	141.42	1.098	18384	5324	Sisma Y SLV	0	26.5	0	0	141.42	1.098
18385	5324	Sisma X SLD	26.1	0	0	0	141.42	1.098	18386	5324	Sisma Y SLD	0	26.1	0	0	141.42	1.098
18387	5325	Sisma X SLV	26.5	0	0	0	1.4E2	1.098	18388	5325	Sisma Y SLV	0	26.5	0	0	1.4E2	1.098
18389	5325	Sisma X SLD	26.1	0	0	0	1.4E2	1.098	18390	5325	Sisma Y SLD	0	26.1	0	0	1.4E2	1.098
18391	5326	Sisma X SLV	25.6	0	0	0	1.4E2	1.098	18392	5326	Sisma Y SLV	0	25.6	0	0	1.4E2	1.098
18393	5326	Sisma X SLD	25.2	0	0	0	1.4E2	1.098	18394	5326	Sisma Y SLD	0	25.2	0	0	1.4E2	1.098
18395	5327	Sisma X SLV	25.6	0	0	0	1.4E2	1.098	18396	5327	Sisma Y SLV	0	25.6	0	0	1.4E2	1.098
18397	5327	Sisma X SLD	25.2	0	0	0	1.4E2	1.098	18398	5327	Sisma Y SLD	0	25.2	0	0	1.4E2	1.098
18399	5328	Sisma X SLV	22.8	0	0	0	1.2E2	1.098	18400	5328	Sisma Y SLV	0	22.8	0	0	1.2E2	1.098
18401	5328	Sisma X SLD	22.4	0	0	0	1.2E2	1.098	18402	5328	Sisma Y SLD	0	22.4	0	0	1.2E2	1.098
18403	5329	Sisma X SLV	22.2	0	0	0	118.24	1.098	18404	5329	Sisma Y SLV	0	22.2	0	0	118.24	1.098
18405	5329	Sisma X SLD	21.8	0	0	0	118.24	1.098	18406	5329	Sisma Y SLD	0	21.8	0	0	118.24	1.098
18407	5330	Sisma X SLV	14.7	0	0	0	78.646	1.098	18408	5330	Sisma Y SLV	0	14.7	0	0	78.646	1.098
18409	5330	Sisma X SLD	14.5	0	0	0	78.646	1.098	18410	5330	Sisma Y SLD	0	14.5	0	0	78.646	1.098
18411	5331	Sisma X SLV	41	0	0	0	2.2E2	1.099	18412	5331	Sisma Y SLV	0	41	0	0	2.2E2	1.099
18413	5331	Sisma X SLD	40.3	0	0	0	2.2E2	1.099	18414	5331	Sisma Y SLD	0	40.3	0	0	2.2E2	1.099
18415	5332	Sisma X SLV	41	0	0	0	2.2E2	1.099	18416	5332	Sisma Y SLV	0	41	0	0	2.2E2	1.099
18417	5332	Sisma X SLD	40.3	0	0	0	2.2E2	1.099	18418	5332	Sisma Y SLD	0	40.3	0	0	2.2E2	1.099
18419	5333	Sisma X SLV	38.7	0	0	0	2.1E2	1.101	18420	5333	Sisma Y SLV	0	38.7	0	0	2.1E2	1.101
18421	5333	Sisma X SLD	38.1	0	0	0	2.1E2	1.101	18422	5333	Sisma Y SLD	0	38.1	0	0	2.1E2	1.101
18423	5334	Sisma X SLV	38.7	0	0	0	2.1E2	1.101	18424	5334	Sisma Y SLV	0	38.7	0	0	2.1E2	1.101
18425	5334	Sisma X SLD	38.1	0	0	0	2.1E2	1.101	18426	5334	Sisma Y SLD	0	38.1	0	0	2.1E2	1.101
18427	5335	Sisma X SLV	37.4	0	0	0	198.08	1.106	18428	5335	Sisma Y SLV	0	37.4	0	0	198.08	1.106
18429	5335	Sisma X SLD	36.8	0	0	0	198.08	1.106	18430	5335	Sisma Y SLD	0	36.8	0	0	198.08	1.106
18431	5336	Sisma X SLV	37.4	0	0	0	198.08	1.106	18432	5336	Sisma Y SLV	0	37.4	0	0	198.08	1.106
18433	5336	Sisma X SLD	36.8	0	0	0	198.08	1.106	18434	5336	Sisma Y SLD	0	36.8	0	0	198.08	1.106
18435	5337	Sisma X SLV	39.8	0	0	0	2.1E2	1.113	18436	5337	Sisma Y SLV	0	39.8	0	0	2.1E2	1.113
18437	5337	Sisma X SLD	39.1	0	0	0	2.1E2	1.113	18438	5337	Sisma Y SLD	0	39.1	0	0	2.1E2	1.113
18439	5338	Sisma X SLV	39.8	0	0	0	2.1E2	1.113	18440	5338	Sisma Y SLV	0	39.8	0	0	2.1E2	1.113
18441	5338	Sisma X SLD	39.1	0	0	0	2.1E2	1.113	18442	5338	Sisma Y SLD	0	39.1	0	0	2.1E2	1.113
18443	5339	Sisma X SLV	39.7	0	0	0	2.1E2	1.123	18444	5339	Sisma Y SLV	0	39.7	0	0	2.1E2	1.123
18445	5339	Sisma X SLD	39.1	0	0	0	2.1E2	1.123	18446	5339	Sisma Y SLD	0	39.1	0	0	2.1E2	1.123
18447	5340	Sisma X SLV	39.7	0	0	0	2.1E2	1.123	18448	5340	Sisma Y SLV	0	39.7	0	0	2.1E2	1.123
18449	5340	Sisma X SLD	39.1	0	0	0	2.1E2	1.123	18450	5340	Sisma Y SLD	0	39.1	0	0	2.1E2	1.123
18451	5341	Sisma X SLV	36.8	0	0	0	1.9E2	1.125	18452	5341	Sisma Y SLV	0	36.8	0	0	1.9E2	1.125
18453	5341	Sisma X SLD	36.2	0	0	0	1.9E2	1.125	18454	5341	Sisma Y SLD	0	36.2	0	0	1.9E2	1.125
18455	5342	Sisma X SLV	36.8	0	0	0	1.9E2	1.125	18456	5342	Sisma Y SLV	0	36.8	0	0	1.9E2	1.125
18457	5342	Sisma X SLD	36.2	0	0	0	1.9E2	1.125	18458	5342	Sisma Y SLD	0	36.2	0	0	1.9E2	1.125
18459	5343	Sisma X SLV	40.2	0	0	0	2.1E2	1.125	18460	5343	Sisma Y SLV	0	40.2	0	0	2.1E2	1.125
18461	5343	Sisma X SLD	39.5	0	0	0	2.1E2	1.125	18462	5343	Sisma Y SLD	0	39.5	0	0	2.1E2	1.125
18463	5344	Sisma X SLV	68.9	0	0	0	3.6E2	1.125	18464	5344	Sisma Y SLV	0	68.9	0	0	3.6E2	1.125
18465	5344	Sisma X SLD	67.9	0	0	0	3.6E2	1.125	18466	5344	Sisma Y SLD	0	67.9	0	0	3.6E2	1.125
18467	5345	Sisma X SLV	63.4	0	0	0	3.3E2	1.125	18468	5345	Sisma Y SLV	0	63.4	0	0	3.3E2	1.125
18469	5345	Sisma X SLD	62.4	0	0	0	3.3E2	1.125	18470	5345	Sisma Y SLD	0	62.4	0	0	3.3E2	1.125
18471	5346	Sisma X SLV	43.4	0	0	0	2.3E2	1.125	18472	5346	Sisma Y SLV	0	43.4	0	0	2.3E2	1.125
18473	5346	Sisma X SLD	42.7	0	0	0	2.3E2	1.125	18474	5346	Sisma Y SLD	0	42.7	0	0	2.3E2	1.125
18475	5347	Sisma X SLV	44	0	0	0	2.3E2	1.125	18476	5347	Sisma Y SLV	0	44	0	0	2.3E2	1.125
18477	5347	Sisma X SLD	43.3	0	0	0	2.3E2	1.125	18478	5347	Sisma Y SLD	0	43.3	0	0	2.3E2	1.125
18479	5348	Sisma X SLV	68.4	0	0	0	3.6E2	1.125	18480	5348	Sisma Y SLV	0	68.4	0	0	3.6E2	1.125
18481	5348	Sisma X SLD	67.3	0	0	0	3.6E2	1.125	18482	5348	Sisma Y SLD	0	67.3	0	0	3.6E2	1.125
18483	5349	Sisma X SLV	67.4	0	0	0	3.5E2	1.125	18484	5349	Sisma Y SLV	0	67.4	0	0	3.5E2	1.125
18485	5349	Sisma X SLD	66.3	0	0	0	3.5E2	1.125	18486	5349	Sisma Y SLD	0	66.3	0	0	3.5E2	1.125
18487	5350	Sisma X SLV	27.9	0	0	0	1.5E2	1.125	18488	5350	Sisma Y SLV	0	27.9	0	0	1.5E2	1.125
18489	5350	Sisma X SLD	27.4	0	0	0	1.5E2	1.125	18490	5350	Sisma Y SLD	0	27.4	0	0	1.5E2	1.125
18491	5351	Sisma X SLV	27.9	0	0	0	1.5E2	1.125	18492	5351	Sisma Y SLV	0	27.9	0	0	1.5E2	1.125
18493	5351	Sisma X SLD	27.4	0	0	0	1.5E2	1.125	18494	5351	Sisma Y SLD	0	27.4	0	0	1.5E2	1.125
18495	5352	Sisma X SLV	27.9	0	0	0	1.5E2	1.125	18496	5352	Sisma Y SLV	0	27.9	0	0	1.5E2	1.125
18497	5352	Sisma X SLD	27.4	0	0	0	1.5E2	1.125	18498	5352	Sisma Y SLD	0	27.4	0	0	1.5E2	1.125
18499	5353	Sisma X SLV	27.9	0	0	0	1.5E2	1.125	18500	5353	Sisma Y SLV	0	27.9	0	0	1.5E2	1.125
18501	5353	Sisma X SLD	27.4	0	0	0	1.5E2	1.125	18502	5353	Sisma Y SLD	0	27.4	0	0	1.5E2	1.125
18503	5354	Sisma X SLV	27.9	0	0	0	1.5E2	1.125	18504	5354	Sisma Y SLV	0	27.9	0	0	1.5E2	1.125
18505	5354	Sisma X SLD	27.4	0	0	0	1.5E2	1.125	18506	5354	Sisma Y SLD	0	27.4	0	0	1.5E2	1.125
18507	5355	Sisma X SLV	27.9	0	0	0	1.5E2	1.125	18508	5355	Sisma Y SLV	0	27.9	0	0	1.5E2	1.125
18509	5355	Sisma X SLD	27.4	0	0	0	1.5E2	1.125	18510	5355	Sisma Y SLD	0	27.4	0	0	1.5E2	1.125
18511	5356	Sisma X SLV	27.9	0	0	0	1.5E2	1.125	18512	5356	Sisma Y SLV	0	27.9	0	0	1.5E2	1.125
18513	5356	Sisma X SLD	27.4	0	0	0	1.5E2	1.125	18514	5356	Sisma Y SLD	0	27.4	0	0	1.5E2	1.125
18515	5357	Sisma X SLV	27.9	0	0	0	1.5E2	1.125	18516	5357	Sisma Y SLV	0	27.9	0	0	1.5E2	1.125
18517	5357	Sisma X SLD	27.4	0	0	0	1.5E2	1.125	18518	5357	Sisma Y SLD	0	27.4	0	0	1.5E2	1.125
18519	5358	Sisma X SLV	27.9	0	0	0	1.5E2	1.125	18520	5358	Sisma Y SLV	0	27.9	0	0	1.5E2	1.125
18521	5358	Sisma X SLD	27.5	0	0	0	1.5E2	1.125	18522	5358	Sisma Y SLD	0	27.5	0	0	1.5E2	1.125
18523	5359	Sisma X SLV	28.1	0	0	0	1.5E2	1.125	18524	5359	Sisma Y SLV	0	28.1	0	0	1.5E2	1.125
18525	5359	Sisma X SLD	27.6	0	0	0	1.5E2	1.125	18526	5359	Sisma Y SLD	0	27.6	0	0	1.5E2	1.125
18527	5360	Sisma X SLV	28.3	0	0	0	1.5E2	1.125	18528	5360	Sisma Y SLV	0	28.3	0	0	1.5E2	1.125
18529	5360	Sisma X SLD	27.9	0	0	0	1.5E2	1.125	18530	5360	Sisma Y SLD	0	27.9	0	0	1.5E2	1.125
18531	5361	Sisma X SLV	28.7	0	0	0	1.5E2	1.125	18532	5361	Sisma Y SLV	0	28.7	0	0	1.5E2	1.125
18533	5361	Sisma X SLD	28.3	0	0	0	1.5E2	1.125	18534	5361	Sisma Y SLD	0	28.3	0	0	1.5E2	1.125
18535	5362	Sisma X SLV	29.1	0	0	0	1.5E2	1.125	18536	5362	Sisma Y SLV	0	29.1	0	0	1.5E2	1.125
18537	5362	Sisma X SLD	28.7	0	0	0	1.5E2	1.125	18538	5362	Sisma Y SLD	0	28.7	0	0	1.5E2	1.125
18539	5363	Sisma X SLV	58.4	0	0	0	304.46	1.125	18540	5363	Sisma Y SLV	0	58.4	0	0	304.46	1.125
18541	5363	Sisma X SLD	57.5	0	0	0	304.46	1.125	18542	5363	Sisma Y SLD	0	57.5	0	0	304.46	1.125
18543	5364	Sisma X SLV	40	0	0	0	2.1E2	1.125	18544	5364	Sisma Y SLV	0	40	0	0	2.1E2	1.125
18545	5364	Sisma X SLD	39.4	0	0	0	2.1E2	1.125	18546	5364	Sisma Y SLD	0	39.4	0	0	2.1E2	1.125

Indice	Nodo	Condizione	Fx	Fy	Fz	Mz	Peso	Gamma	Indice	Nodo	Condizione	Fx	Fy	Fz	Mz	Peso	Gamma
18547	5365	Sisma X SLV	57.9	0	0	0	301.88	1.125	18548	5365	Sisma Y SLV	0	57.9	0	0	301.88	1.125
18549	5365	Sisma X SLD	57	0	0	0	301.88	1.125	18550	5365	Sisma Y SLD	0	57	0	0	301.88	1.125
18551	5366	Sisma X SLV	43.4	0	0	0	2.3E2	1.125	18552	5366	Sisma Y SLV	0	43.4	0	0	2.3E2	1.125
18553	5366	Sisma X SLD	42.7	0	0	0	2.3E2	1.125	18554	5366	Sisma Y SLD	0	42.7	0	0	2.3E2	1.125
18555	5367	Sisma X SLV	45.4	0	0	0	2.4E2	1.125	18556	5367	Sisma Y SLV	0	45.4	0	0	2.4E2	1.125
18557	5367	Sisma X SLD	44.7	0	0	0	2.4E2	1.125	18558	5367	Sisma Y SLD	0	44.7	0	0	2.4E2	1.125
18559	5368	Sisma X SLV	43.4	0	0	0	2.3E2	1.125	18560	5368	Sisma Y SLV	0	43.4	0	0	2.3E2	1.125
18561	5368	Sisma X SLD	42.7	0	0	0	2.3E2	1.125	18562	5368	Sisma Y SLD	0	42.7	0	0	2.3E2	1.125
18563	5369	Sisma X SLV	43.3	0	0	0	2.3E2	1.125	18564	5369	Sisma Y SLV	0	43.3	0	0	2.3E2	1.125
18565	5369	Sisma X SLD	42.7	0	0	0	2.3E2	1.125	18566	5369	Sisma Y SLD	0	42.7	0	0	2.3E2	1.125
18567	5370	Sisma X SLV	42.6	0	0	0	2.2E2	1.125	18568	5370	Sisma Y SLV	0	42.6	0	0	2.2E2	1.125
18569	5370	Sisma X SLD	42	0	0	0	2.2E2	1.125	18570	5370	Sisma Y SLD	0	42	0	0	2.2E2	1.125
18571	5371	Sisma X SLV	43.3	0	0	0	2.3E2	1.125	18572	5371	Sisma Y SLV	0	43.3	0	0	2.3E2	1.125
18573	5371	Sisma X SLD	42.7	0	0	0	2.3E2	1.125	18574	5371	Sisma Y SLD	0	42.7	0	0	2.3E2	1.125
18575	5372	Sisma X SLV	43.3	0	0	0	2.3E2	1.125	18576	5372	Sisma Y SLV	0	43.3	0	0	2.3E2	1.125
18577	5372	Sisma X SLD	42.6	0	0	0	2.3E2	1.125	18578	5372	Sisma Y SLD	0	42.6	0	0	2.3E2	1.125
18579	5373	Sisma X SLV	43.5	0	0	0	226.39	1.125	18580	5373	Sisma Y SLV	0	43.5	0	0	226.39	1.125
18581	5373	Sisma X SLD	42.8	0	0	0	226.39	1.125	18582	5373	Sisma Y SLD	0	42.8	0	0	226.39	1.125
18583	5374	Sisma X SLV	42.9	0	0	0	2.2E2	1.125	18584	5374	Sisma Y SLV	0	42.9	0	0	2.2E2	1.125
18585	5374	Sisma X SLD	42.2	0	0	0	2.2E2	1.125	18586	5374	Sisma Y SLD	0	42.2	0	0	2.2E2	1.125
18587	5375	Sisma X SLV	43.3	0	0	0	2.3E2	1.125	18588	5375	Sisma Y SLV	0	43.3	0	0	2.3E2	1.125
18589	5375	Sisma X SLD	42.6	0	0	0	2.3E2	1.125	18590	5375	Sisma Y SLD	0	42.6	0	0	2.3E2	1.125
18591	5376	Sisma X SLV	43.2	0	0	0	2.2E2	1.125	18592	5376	Sisma Y SLV	0	43.2	0	0	2.2E2	1.125
18593	5376	Sisma X SLD	42.5	0	0	0	2.2E2	1.125	18594	5376	Sisma Y SLD	0	42.5	0	0	2.2E2	1.125
18595	5377	Sisma X SLV	43.6	0	0	0	2.3E2	1.125	18596	5377	Sisma Y SLV	0	43.6	0	0	2.3E2	1.125
18597	5377	Sisma X SLD	42.9	0	0	0	2.3E2	1.125	18598	5377	Sisma Y SLD	0	42.9	0	0	2.3E2	1.125
18599	5378	Sisma X SLV	43.2	0	0	0	2.2E2	1.125	18600	5378	Sisma Y SLV	0	43.2	0	0	2.2E2	1.125
18601	5378	Sisma X SLD	42.5	0	0	0	2.2E2	1.125	18602	5378	Sisma Y SLD	0	42.5	0	0	2.2E2	1.125
18603	5379	Sisma X SLV	44	0	0	0	2.3E2	1.125	18604	5379	Sisma Y SLV	0	44	0	0	2.3E2	1.125
18605	5379	Sisma X SLD	43.3	0	0	0	2.3E2	1.125	18606	5379	Sisma Y SLD	0	43.3	0	0	2.3E2	1.125
18607	5380	Sisma X SLV	42.7	0	0	0	2.2E2	1.125	18608	5380	Sisma Y SLV	0	42.7	0	0	2.2E2	1.125
18609	5380	Sisma X SLD	42	0	0	0	2.2E2	1.125	18610	5380	Sisma Y SLD	0	42	0	0	2.2E2	1.125
18611	5381	Sisma X SLV	27.4	0	0	0	142.59	1.125	18612	5381	Sisma Y SLV	0	27.4	0	0	142.59	1.125
18613	5381	Sisma X SLD	26.9	0	0	0	142.59	1.125	18614	5381	Sisma Y SLD	0	26.9	0	0	142.59	1.125
18615	5382	Sisma X SLV	33.4	0	0	0	1.7E2	1.125	18616	5382	Sisma Y SLV	0	33.4	0	0	1.7E2	1.125
18617	5382	Sisma X SLD	32.9	0	0	0	1.7E2	1.125	18618	5382	Sisma Y SLD	0	32.9	0	0	1.7E2	1.125
18619	5383	Sisma X SLV	33.4	0	0	0	1.7E2	1.125	18620	5383	Sisma Y SLV	0	33.4	0	0	1.7E2	1.125
18621	5383	Sisma X SLD	32.9	0	0	0	1.7E2	1.125	18622	5383	Sisma Y SLD	0	32.9	0	0	1.7E2	1.125
18623	5384	Sisma X SLV	45.1	0	0	0	2.4E2	1.125	18624	5384	Sisma Y SLV	0	45.1	0	0	2.4E2	1.125
18625	5384	Sisma X SLD	44.4	0	0	0	2.4E2	1.125	18626	5384	Sisma Y SLD	0	44.4	0	0	2.4E2	1.125
18627	5385	Sisma X SLV	42.9	0	0	0	2.2E2	1.125	18628	5385	Sisma Y SLV	0	42.9	0	0	2.2E2	1.125
18629	5385	Sisma X SLD	42.2	0	0	0	2.2E2	1.125	18630	5385	Sisma Y SLD	0	42.2	0	0	2.2E2	1.125
18631	5386	Sisma X SLV	45.1	0	0	0	2.3E2	1.125	18632	5386	Sisma Y SLV	0	45.1	0	0	2.3E2	1.125
18633	5386	Sisma X SLD	44.4	0	0	0	2.3E2	1.125	18634	5386	Sisma Y SLD	0	44.4	0	0	2.3E2	1.125
18635	5387	Sisma X SLV	41.7	0	0	0	217.26	1.125	18636	5387	Sisma Y SLV	0	41.7	0	0	217.26	1.125
18637	5387	Sisma X SLD	41	0	0	0	217.26	1.125	18638	5387	Sisma Y SLD	0	41	0	0	217.26	1.125
18639	5388	Sisma X SLV	44.1	0	0	0	2.3E2	1.125	18640	5388	Sisma Y SLV	0	44.1	0	0	2.3E2	1.125
18641	5388	Sisma X SLD	43.3	0	0	0	2.3E2	1.125	18642	5388	Sisma Y SLD	0	43.3	0	0	2.3E2	1.125
18643	5389	Sisma X SLV	27.4	0	0	0	142.63	1.125	18644	5389	Sisma Y SLV	0	27.4	0	0	142.63	1.125
18645	5389	Sisma X SLD	26.9	0	0	0	142.63	1.125	18646	5389	Sisma Y SLD	0	26.9	0	0	142.63	1.125
18647	5390	Sisma X SLV	27.4	0	0	0	142.67	1.125	18648	5390	Sisma Y SLV	0	27.4	0	0	142.67	1.125
18649	5390	Sisma X SLD	27	0	0	0	142.67	1.125	18650	5390	Sisma Y SLD	0	27	0	0	142.67	1.125
18651	5391	Sisma X SLV	43.5	0	0	0	2.3E2	1.125	18652	5391	Sisma Y SLV	0	43.5	0	0	2.3E2	1.125
18653	5391	Sisma X SLD	42.8	0	0	0	2.3E2	1.125	18654	5391	Sisma Y SLD	0	42.8	0	0	2.3E2	1.125
18655	5392	Sisma X SLV	40	0	0	0	2.1E2	1.125	18656	5392	Sisma Y SLV	0	40	0	0	2.1E2	1.125
18657	5392	Sisma X SLD	39.4	0	0	0	2.1E2	1.125	18658	5392	Sisma Y SLD	0	39.4	0	0	2.1E2	1.125
18659	5393	Sisma X SLV	40.1	0	0	0	2.1E2	1.125	18660	5393	Sisma Y SLV	0	40.1	0	0	2.1E2	1.125
18661	5393	Sisma X SLD	39.5	0	0	0	2.1E2	1.125	18662	5393	Sisma Y SLD	0	39.5	0	0	2.1E2	1.125
18663	5394	Sisma X SLV	43.2	0	0	0	2.2E2	1.125	18664	5394	Sisma Y SLV	0	43.2	0	0	2.2E2	1.125
18665	5394	Sisma X SLD	42.5	0	0	0	2.2E2	1.125	18666	5394	Sisma Y SLD	0	42.5	0	0	2.2E2	1.125
18667	5395	Sisma X SLV	47.7	0	0	0	2.5E2	1.125	18668	5395	Sisma Y SLV	0	47.7	0	0	2.5E2	1.125
18669	5395	Sisma X SLD	46.9	0	0	0	2.5E2	1.125	18670	5395	Sisma Y SLD	0	46.9	0	0	2.5E2	1.125
18671	5396	Sisma X SLV	42.5	0	0	0	2.2E2	1.125	18672	5396	Sisma Y SLV	0	42.5	0	0	2.2E2	1.125
18673	5396	Sisma X SLD	41.8	0	0	0	2.2E2	1.125	18674	5396	Sisma Y SLD	0	41.8	0	0	2.2E2	1.125
18675	5397	Sisma X SLV	47.1	0	0	0	245.17	1.125	18676	5397	Sisma Y SLV	0	47.1	0	0	245.17	1.125
18677	5397	Sisma X SLD	46.3	0	0	0	245.17	1.125	18678	5397	Sisma Y SLD	0	46.3	0	0	245.17	1.125
18679	5398	Sisma X SLV	40	0	0	0	2.1E2	1.125	18680	5398	Sisma Y SLV	0	40	0	0	2.1E2	1.125
18681	5398	Sisma X SLD	39.4	0	0	0	2.1E2	1.125	18682	5398	Sisma Y SLD	0	39.4	0	0	2.1E2	1.125
18683	5399	Sisma X SLV	27.4	0	0	0	142.71	1.125	18684	5399	Sisma Y SLV	0	27.4	0	0	142.71	1.125
18685	5399	Sisma X SLD	27	0	0	0	142.71	1.125	18686	5399	Sisma Y SLD	0	27	0	0	142.71	1.125
18687	5400	Sisma X SLV	32.4	0	0	0	1.7E2	1.125	18688	5400	Sisma Y SLV	0	32.4	0	0	1.7E2	1.125
18689	5400	Sisma X SLD	31.8	0	0	0	1.7E2	1.125	18690	5400	Sisma Y SLD	0	31.8	0	0	1.7E2	1.125
18691	5401	Sisma X SLV	39.1	0	0	0	2.0E2	1.125	18692	5401	Sisma Y SLV	0	39.1	0	0	2.0E2	1.125
18693	5401	Sisma X SLD	38.5	0	0	0	2.0E2	1.125	18694	5401	Sisma Y SLD	0	38.5	0	0	2.0E2	1.125
18695	5402	Sisma X SLV	27.4	0	0	0	142.75	1.125	18696	5402	Sisma Y SLV	0	27.4	0	0	142.75	1.125
18697	5402	Sisma X SLD	27	0	0	0	142.75	1.125	18698	5402	Sisma Y SLD	0	27	0	0	142.75	1.125
18699	5403	Sisma X SLV	42.5	0	0	0	2.2E2	1.125	18700	5403	Sisma Y SLV	0	42.5	0	0	2.2E2	1.125
18701	5403	Sisma X SLD	41.8	0	0	0	2.2E2	1.125	18702	5403	Sisma Y SLD	0	41.8	0	0	2.2E2	1.125
18703	5404	Sisma X SLV	27.4	0	0	0	1.4E2	1.125	18704	5404	Sisma Y SLV	0	27.4	0	0	1.4E2	1.125
18705	5404	Sisma X SLD	27	0	0	0	1.4E2	1.125	18706	5404	Sisma Y SLD	0	27	0	0	1.4E2	1.125
18707	5405	Sisma X SLV	47.1	0	0	0	2.4E2	1.126	18708	5405	Sisma Y SLV	0	47.1	0	0	2.4E2	1.126
18709	5405	Sisma X SLD	46.3	0	0	0	2.4E2	1.126	18710	5405	Sisma Y SLD	0	46.3	0	0	2.4E2	1.126
18711	5406	Sisma X SLV	47	0	0	0	2.4E2	1.126	18712	5406	Sisma Y SLV	0	47	0	0	2.4E2	1.126
18713	5406	Sisma X SLD	46.3	0	0	0	2.4E2	1.126	18714	5406	Sisma Y SLD	0	46.3	0	0	2.4E2	1.126
18715	5407	Sisma X SLV	47	0	0	0	2.4E2	1.126	18716	5407	Sisma Y SLV	0	47	0	0	2.4E2	1.126
18717	5407	Sisma X SLD	46.3	0	0	0	2.4E2	1.126	18718	5407	Sisma Y SLD	0	46.3	0	0	2.4E2	1.126
18719	5408	Sisma X SLV	27.4	0	0	0	1.4E2	1.126	18720	5408	Sisma Y SLV	0	27.4	0	0	1.4E2	1.126
18721	5408	Sisma X SLD	27	0	0	0	1.4E2	1.126	18722	5408	Sisma Y SLD	0	27	0	0	1.4E2	1.126
18723	5409	Sisma X SLV	44.3	0	0	0	2.3E2	1.126	18724	5409	Sisma Y SLV	0	44.3	0	0	2.3E2	1.126
18725	5409	Sisma X SLD	43.6	0	0	0	2.3E2	1.126	18726	5409	Sisma Y SLD	0	43.6	0	0	2.3E2	1.126
18727	5410	Sisma X SLV	41.1	0	0	0	2.1E2	1.126	18728	5410	Sisma Y SLV	0	41.1	0	0	2.1E2	1.126
18729	5410	Sisma X SLD	40.4	0	0	0	2.1E2	1.126	18730	5410	Sisma Y SLD	0	40.4	0	0	2.1E2	1.126
18731	5411	Sisma X SLV	27.5	0	0	0	1.4E2	1.126	18732	5411	Sisma Y SLV	0	27.5	0	0	1.4E2	1.126
18733	5411	Sisma X SLD	27	0	0	0	1.4E2	1.126	18734	5411	Sisma Y SLD	0	27	0	0	1.4E2	1.126
18735	5412	Sisma X SLV	37.6	0	0	0	2.0E2	1.126	18736	5412	Sisma Y SLV	0	37.6	0	0	2.0E2	1.126
18737	5412	Sisma X SLD	37	0	0	0	2.0E2	1.126	18738	5412	Sisma Y SLD	0	37	0	0	2.0E2	1.126
18739	5413	Sisma X SLV	37.6	0	0	0	195.51	1.126	18740	5413	Sisma Y SLV	0	37.6	0	0	195.51	1.126
18741	5413	Sisma X SLD	37	0	0	0	195.51	1.126	18742	5413	Sisma Y SLD	0	37	0	0	195.51	1.126
18743	5414	Sisma X SLV	41.8	0	0	0	2.2E2	1.126	18744	5414	Sisma Y SLV	0	41.8	0	0	2.2E2	1.126
18745	5414	Sisma X SLD	41.1	0	0	0	2.2E2	1.126	18746	5414	Sisma Y SLD	0	41.1	0	0	2.2E2	1.126
18747	5415	Sisma X SLV	51	0	0	0	2.7E2	1.126	18748	5415	Sisma Y SLV	0	51	0	0	2.7E2	1.126
18749	5415	Sisma X SLD	50.2	0	0	0	2.7E2	1.126	18750	5415	Sisma Y SLD	0	50.2	0	0	2.7E2	1.126
18751	5416	Sisma X SLV	42.1	0	0	0	2.2E2	1.126	18752	5416	Sisma Y SLV	0	42.1	0	0	2.2E2	1.126
18753	5416	Sisma X SLD	41.4	0	0	0	2.2E2	1.126	18754	5416	Sisma Y SLD	0	41.4	0	0	2.2E2	1.126

Indice	Nodo	Condizione	Fx	Fy	Fz	Mz	Peso	Gamma	Indice	Nodo	Condizione	Fx	Fy	Fz	Mz	Peso	Gamma
18755	5417	Sisma X SLV	49.7	0	0	0	2.6E2	1.126	18756	5417	Sisma Y SLV	0	49.7	0	0	2.6E2	1.126
18757	5417	Sisma X SLD	48.9	0	0	0	2.6E2	1.126	18758	5417	Sisma Y SLD	0	48.9	0	0	2.6E2	1.126
18759	5418	Sisma X SLV	37.9	0	0	0	2.0E2	1.126	18760	5418	Sisma Y SLV	0	37.9	0	0	2.0E2	1.126
18761	5418	Sisma X SLD	37.3	0	0	0	2.0E2	1.126	18762	5418	Sisma Y SLD	0	37.3	0	0	2.0E2	1.126
18763	5419	Sisma X SLV	27.5	0	0	0	1.4E2	1.126	18764	5419	Sisma Y SLV	0	27.5	0	0	1.4E2	1.126
18765	5419	Sisma X SLD	27.1	0	0	0	1.4E2	1.126	18766	5419	Sisma Y SLD	0	27.1	0	0	1.4E2	1.126
18767	5420	Sisma X SLV	39.3	0	0	0	2.0E2	1.126	18768	5420	Sisma Y SLV	0	39.3	0	0	2.0E2	1.126
18769	5420	Sisma X SLD	38.7	0	0	0	2.0E2	1.126	18770	5420	Sisma Y SLD	0	38.7	0	0	2.0E2	1.126
18771	5421	Sisma X SLV	30.5	0	0	0	1.6E2	1.126	18772	5421	Sisma Y SLV	0	30.5	0	0	1.6E2	1.126
18773	5421	Sisma X SLD	30	0	0	0	1.6E2	1.126	18774	5421	Sisma Y SLD	0	30	0	0	1.6E2	1.126
18775	5422	Sisma X SLV	38.4	0	0	0	2.0E2	1.126	18776	5422	Sisma Y SLV	0	38.4	0	0	2.0E2	1.126
18777	5422	Sisma X SLD	37.8	0	0	0	2.0E2	1.126	18778	5422	Sisma Y SLD	0	37.8	0	0	2.0E2	1.126
18779	5423	Sisma X SLV	27.6	0	0	0	1.4E2	1.126	18780	5423	Sisma Y SLV	0	27.6	0	0	1.4E2	1.126
18781	5423	Sisma X SLD	27.2	0	0	0	1.4E2	1.126	18782	5423	Sisma Y SLD	0	27.2	0	0	1.4E2	1.126
18783	5424	Sisma X SLV	44.2	0	0	0	229.95	1.126	18784	5424	Sisma Y SLV	0	44.2	0	0	229.95	1.126
18785	5424	Sisma X SLD	43.5	0	0	0	229.95	1.126	18786	5424	Sisma Y SLD	0	43.5	0	0	229.95	1.126
18787	5425	Sisma X SLV	43.7	0	0	0	2.3E2	1.126	18788	5425	Sisma Y SLV	0	43.7	0	0	2.3E2	1.126
18789	5425	Sisma X SLD	43	0	0	0	2.3E2	1.126	18790	5425	Sisma Y SLD	0	43	0	0	2.3E2	1.126
18791	5426	Sisma X SLV	44.8	0	0	0	2.3E2	1.126	18792	5426	Sisma Y SLV	0	44.8	0	0	2.3E2	1.126
18793	5426	Sisma X SLD	44.1	0	0	0	2.3E2	1.126	18794	5426	Sisma Y SLD	0	44.1	0	0	2.3E2	1.126
18795	5427	Sisma X SLV	43.4	0	0	0	2.3E2	1.126	18796	5427	Sisma Y SLV	0	43.4	0	0	2.3E2	1.126
18797	5427	Sisma X SLD	42.7	0	0	0	2.3E2	1.126	18798	5427	Sisma Y SLD	0	42.7	0	0	2.3E2	1.126
18799	5428	Sisma X SLV	27.9	0	0	0	1.5E2	1.126	18800	5428	Sisma Y SLV	0	27.9	0	0	1.5E2	1.126
18801	5428	Sisma X SLD	27.5	0	0	0	1.5E2	1.126	18802	5428	Sisma Y SLD	0	27.5	0	0	1.5E2	1.126
18803	5429	Sisma X SLV	46.7	0	0	0	2.4E2	1.126	18804	5429	Sisma Y SLV	0	46.7	0	0	2.4E2	1.126
18805	5429	Sisma X SLD	45.9	0	0	0	2.4E2	1.126	18806	5429	Sisma Y SLD	0	45.9	0	0	2.4E2	1.126
18807	5430	Sisma X SLV	46.7	0	0	0	2.4E2	1.126	18808	5430	Sisma Y SLV	0	46.7	0	0	2.4E2	1.126
18809	5430	Sisma X SLD	45.9	0	0	0	2.4E2	1.126	18810	5430	Sisma Y SLD	0	45.9	0	0	2.4E2	1.126
18811	5431	Sisma X SLV	47.6	0	0	0	247.58	1.126	18812	5431	Sisma Y SLV	0	47.6	0	0	247.58	1.126
18813	5431	Sisma X SLD	46.8	0	0	0	247.58	1.126	18814	5431	Sisma Y SLD	0	46.8	0	0	247.58	1.126
18815	5432	Sisma X SLV	47.6	0	0	0	2.5E2	1.126	18816	5432	Sisma Y SLV	0	47.6	0	0	2.5E2	1.126
18817	5432	Sisma X SLD	46.8	0	0	0	2.5E2	1.126	18818	5432	Sisma Y SLD	0	46.8	0	0	2.5E2	1.126
18819	5433	Sisma X SLV	45.5	0	0	0	2.4E2	1.126	18820	5433	Sisma Y SLV	0	45.5	0	0	2.4E2	1.126
18821	5433	Sisma X SLD	44.8	0	0	0	2.4E2	1.126	18822	5433	Sisma Y SLD	0	44.8	0	0	2.4E2	1.126
18823	5434	Sisma X SLV	43.1	0	0	0	2.2E2	1.126	18824	5434	Sisma Y SLV	0	43.1	0	0	2.2E2	1.126
18825	5434	Sisma X SLD	42.5	0	0	0	2.2E2	1.126	18826	5434	Sisma Y SLD	0	42.5	0	0	2.2E2	1.126
18827	5435	Sisma X SLV	37.2	0	0	0	1.9E2	1.126	18828	5435	Sisma Y SLV	0	37.2	0	0	1.9E2	1.126
18829	5435	Sisma X SLD	36.6	0	0	0	1.9E2	1.126	18830	5435	Sisma Y SLD	0	36.6	0	0	1.9E2	1.126
18831	5436	Sisma X SLV	46.2	0	0	0	2.4E2	1.126	18832	5436	Sisma Y SLV	0	46.2	0	0	2.4E2	1.126
18833	5436	Sisma X SLD	45.4	0	0	0	2.4E2	1.126	18834	5436	Sisma Y SLD	0	45.4	0	0	2.4E2	1.126
18835	5437	Sisma X SLV	46.2	0	0	0	2.4E2	1.126	18836	5437	Sisma Y SLV	0	46.2	0	0	2.4E2	1.126
18837	5437	Sisma X SLD	45.5	0	0	0	2.4E2	1.126	18838	5437	Sisma Y SLD	0	45.5	0	0	2.4E2	1.126
18839	5438	Sisma X SLV	28.4	0	0	0	1.5E2	1.126	18840	5438	Sisma Y SLV	0	28.4	0	0	1.5E2	1.126
18841	5438	Sisma X SLD	27.9	0	0	0	1.5E2	1.126	18842	5438	Sisma Y SLD	0	27.9	0	0	1.5E2	1.126
18843	5439	Sisma X SLV	48.7	0	0	0	253.63	1.126	18844	5439	Sisma Y SLV	0	48.7	0	0	253.63	1.126
18845	5439	Sisma X SLD	48	0	0	0	253.63	1.126	18846	5439	Sisma Y SLD	0	48	0	0	253.63	1.126
18847	5440	Sisma X SLV	48.7	0	0	0	253.29	1.126	18848	5440	Sisma Y SLV	0	48.7	0	0	253.29	1.126
18849	5440	Sisma X SLD	47.9	0	0	0	253.29	1.126	18850	5440	Sisma Y SLD	0	47.9	0	0	253.29	1.126
18851	5441	Sisma X SLV	46.3	0	0	0	2.4E2	1.126	18852	5441	Sisma Y SLV	0	46.3	0	0	2.4E2	1.126
18853	5441	Sisma X SLD	45.6	0	0	0	2.4E2	1.126	18854	5441	Sisma Y SLD	0	45.6	0	0	2.4E2	1.126
18855	5442	Sisma X SLV	43	0	0	0	2.2E2	1.126	18856	5442	Sisma Y SLV	0	43	0	0	2.2E2	1.126
18857	5442	Sisma X SLD	42.4	0	0	0	2.2E2	1.126	18858	5442	Sisma Y SLD	0	42.4	0	0	2.2E2	1.126
18859	5443	Sisma X SLV	46	0	0	0	2.4E2	1.126	18860	5443	Sisma Y SLV	0	46	0	0	2.4E2	1.126
18861	5443	Sisma X SLD	45.2	0	0	0	2.4E2	1.126	18862	5443	Sisma Y SLD	0	45.2	0	0	2.4E2	1.126
18863	5444	Sisma X SLV	46	0	0	0	2.4E2	1.126	18864	5444	Sisma Y SLV	0	46	0	0	2.4E2	1.126
18865	5444	Sisma X SLD	45.3	0	0	0	2.4E2	1.126	18866	5444	Sisma Y SLD	0	45.3	0	0	2.4E2	1.126
18867	5445	Sisma X SLV	49.5	0	0	0	2.6E2	1.126	18868	5445	Sisma Y SLV	0	49.5	0	0	2.6E2	1.126
18869	5445	Sisma X SLD	48.7	0	0	0	2.6E2	1.126	18870	5445	Sisma Y SLD	0	48.7	0	0	2.6E2	1.126
18871	5446	Sisma X SLV	28.8	0	0	0	1.5E2	1.126	18872	5446	Sisma Y SLV	0	28.8	0	0	1.5E2	1.126
18873	5446	Sisma X SLD	28.3	0	0	0	1.5E2	1.126	18874	5446	Sisma Y SLD	0	28.3	0	0	1.5E2	1.126
18875	5447	Sisma X SLV	50.5	0	0	0	2.6E2	1.126	18876	5447	Sisma Y SLV	0	50.5	0	0	2.6E2	1.126
18877	5447	Sisma X SLD	49.7	0	0	0	2.6E2	1.126	18878	5447	Sisma Y SLD	0	49.7	0	0	2.6E2	1.126
18879	5448	Sisma X SLV	48.8	0	0	0	2.5E2	1.126	18880	5448	Sisma Y SLV	0	48.8	0	0	2.5E2	1.126
18881	5448	Sisma X SLD	48	0	0	0	2.5E2	1.126	18882	5448	Sisma Y SLD	0	48	0	0	2.5E2	1.126
18883	5449	Sisma X SLV	51.9	0	0	0	2.7E2	1.126	18884	5449	Sisma Y SLV	0	51.9	0	0	2.7E2	1.126
18885	5449	Sisma X SLD	51.1	0	0	0	2.7E2	1.126	18886	5449	Sisma Y SLD	0	51.1	0	0	2.7E2	1.126
18887	5450	Sisma X SLV	48.4	0	0	0	2.5E2	1.126	18888	5450	Sisma Y SLV	0	48.4	0	0	2.5E2	1.126
18889	5450	Sisma X SLD	47.6	0	0	0	2.5E2	1.126	18890	5450	Sisma Y SLD	0	47.6	0	0	2.5E2	1.126
18891	5451	Sisma X SLV	38	0	0	0	197.83	1.126	18892	5451	Sisma Y SLV	0	38	0	0	197.83	1.126
18893	5451	Sisma X SLD	37.4	0	0	0	197.83	1.126	18894	5451	Sisma Y SLD	0	37.4	0	0	197.83	1.126
18895	5452	Sisma X SLV	36	0	0	0	1.9E2	1.126	18896	5452	Sisma Y SLV	0	36	0	0	1.9E2	1.126
18897	5452	Sisma X SLD	35.4	0	0	0	1.9E2	1.126	18898	5452	Sisma Y SLD	0	35.4	0	0	1.9E2	1.126
18899	5453	Sisma X SLV	28	0	0	0	1.5E2	1.126	18900	5453	Sisma Y SLV	0	28	0	0	1.5E2	1.126
18901	5453	Sisma X SLD	27.6	0	0	0	1.5E2	1.126	18902	5453	Sisma Y SLD	0	27.6	0	0	1.5E2	1.126
18903	5454	Sisma X SLV	28	0	0	0	1.5E2	1.126	18904	5454	Sisma Y SLV	0	28	0	0	1.5E2	1.126
18905	5454	Sisma X SLD	27.6	0	0	0	1.5E2	1.126	18906	5454	Sisma Y SLD	0	27.6	0	0	1.5E2	1.126
18907	5455	Sisma X SLV	28	0	0	0	1.5E2	1.126	18908	5455	Sisma Y SLV	0	28	0	0	1.5E2	1.126
18909	5455	Sisma X SLD	27.6	0	0	0	1.5E2	1.126	18910	5455	Sisma Y SLD	0	27.6	0	0	1.5E2	1.126
18911	5456	Sisma X SLV	28	0	0	0	1.5E2	1.126	18912	5456	Sisma Y SLV	0	28	0	0	1.5E2	1.126
18913	5456	Sisma X SLD	27.6	0	0	0	1.5E2	1.126	18914	5456	Sisma Y SLD	0	27.6	0	0	1.5E2	1.126
18915	5457	Sisma X SLV	28	0	0	0	1.5E2	1.126	18916	5457	Sisma Y SLV	0	28	0	0	1.5E2	1.126
18917	5457	Sisma X SLD	27.6	0	0	0	1.5E2	1.126	18918	5457	Sisma Y SLD	0	27.6	0	0	1.5E2	1.126
18919	5458	Sisma X SLV	28.1	0	0	0	1.5E2	1.126	18920	5458	Sisma Y SLV	0	28.1	0	0	1.5E2	1.126
18921	5458	Sisma X SLD	27.6	0	0	0	1.5E2	1.126	18922	5458	Sisma Y SLD	0	27.6	0	0	1.5E2	1.126
18923	5459	Sisma X SLV	28.2	0	0	0	1.5E2	1.126	18924	5459	Sisma Y SLV	0	28.2	0	0	1.5E2	1.126
18925	5459	Sisma X SLD	27.7	0	0	0	1.5E2	1.126	18926	5459	Sisma Y SLD	0	27.7	0	0	1.5E2	1.126
18927	5460	Sisma X SLV	28	0	0	0	1.5E2	1.126	18928	5460	Sisma Y SLV	0	28	0	0	1.5E2	1.126
18929	5460	Sisma X SLD	27.6	0	0	0	1.5E2	1.126	18930	5460	Sisma Y SLD	0	27.6	0	0	1.5E2	1.126
18931	5461	Sisma X SLV	28.5	0	0	0	1.5E2	1.126	18932	5461	Sisma Y SLV	0	28.5	0	0	1.5E2	1.126
18933	5461	Sisma X SLD	28	0	0	0	1.5E2	1.126	18934	5461	Sisma Y SLD	0	28	0	0	1.5E2	1.126
18935	5462	Sisma X SLV	28	0	0	0	1.5E2	1.126	18936	5462	Sisma Y SLV	0	28	0	0	1.5E2	1.126
18937	5462	Sisma X SLD	27.6	0	0	0	1.5E2	1.126	18938	5462	Sisma Y SLD	0	27.6	0	0	1.5E2	1.126
18939	5463	Sisma X SLV	28.9	0	0	0	1.5E2	1.126	18940	5463	Sisma Y SLV	0	28.9	0	0	1.5E2	1.126
18941	5463	Sisma X SLD	28.4	0	0	0	1.5E2	1.126	18942	5463	Sisma Y SLD	0	28.4	0	0	1.5E2	1.126
18943	5464	Sisma X SLV	28	0	0	0	1.5E2	1.126	18944	5464	Sisma Y SLV	0	28	0	0	1.5E2	1.126
18945	5464	Sisma X SLD	27.6	0	0	0	1.5E2	1.126	18946	5464	Sisma Y SLD	0	27.6	0	0	1.5E2	1.126
18947	5465	Sisma X SLV	29.3	0	0	0	1.5E2	1.126	18948	5465	Sisma Y SLV	0	29.3	0	0	1.5E2	1.126
18949	5465	Sisma X SLD	28.8	0	0	0	1.5E2	1.126	18950	5465	Sisma Y SLD	0	28.8	0	0	1.5E2	1.126
18951	5466	Sisma X SLV	18.1	0	0	0	94.033	1.126	18952	5466	Sisma Y SLV	0	18.1	0	0	94.033	1.126
18953	5466	Sisma X SLD	17.8	0	0	0	94.033	1.126	18954	5466	Sisma Y SLD	0	17.8	0	0	94.033	1.126
18955	5467	Sisma X SLV	26.3	0	0	0	1.4E2	1.126	18956	5467	Sisma Y SLV	0	26.3	0	0	1.4E2	1.126

Indice	Nodo	Condizione	Fx	Fy	Fz	Mz	Peso	Gamma	Indice	Nodo	Condizione	Fx	Fy	Fz	Mz	Peso	Gamma
18957	5467	Sisma X SLD	25.9	0	0	0	1.4E2	1.126	18958	5467	Sisma Y SLD	0	25.9	0	0	1.4E2	1.126
18959	5468	Sisma X SLV	22.5	0	0	0	1.2E2	1.126	18960	5468	Sisma Y SLV	0	22.5	0	0	1.2E2	1.126
18961	5468	Sisma X SLD	22.1	0	0	0	1.2E2	1.126	18962	5468	Sisma Y SLD	0	22.1	0	0	1.2E2	1.126
18963	5469	Sisma X SLV	22.2	0	0	0	1.2E2	1.126	18964	5469	Sisma Y SLV	0	22.2	0	0	1.2E2	1.126
18965	5469	Sisma X SLD	21.8	0	0	0	1.2E2	1.126	18966	5469	Sisma Y SLD	0	21.8	0	0	1.2E2	1.126
18967	5470	Sisma X SLV	20.9	0	0	0	1.1E2	1.126	18968	5470	Sisma Y SLV	0	20.9	0	0	1.1E2	1.126
18969	5470	Sisma X SLD	20.6	0	0	0	1.1E2	1.126	18970	5470	Sisma Y SLD	0	20.6	0	0	1.1E2	1.126
18971	5471	Sisma X SLV	23.6	0	0	0	1.2E2	1.126	18972	5471	Sisma Y SLV	0	23.6	0	0	1.2E2	1.126
18973	5471	Sisma X SLD	23.2	0	0	0	1.2E2	1.126	18974	5471	Sisma Y SLD	0	23.2	0	0	1.2E2	1.126
18975	5472	Sisma X SLV	19	0	0	0	98.886	1.126	18976	5472	Sisma Y SLV	0	19	0	0	98.886	1.126
18977	5472	Sisma X SLD	18.7	0	0	0	98.886	1.126	18978	5472	Sisma Y SLD	0	18.7	0	0	98.886	1.126
18979	5473	Sisma X SLV	17.9	0	0	0	93.315	1.126	18980	5473	Sisma Y SLV	0	17.9	0	0	93.315	1.126
18981	5473	Sisma X SLD	17.7	0	0	0	93.315	1.126	18982	5473	Sisma Y SLD	0	17.7	0	0	93.315	1.126
18983	5474	Sisma X SLV	19.5	0	0	0	1.0E2	1.126	18984	5474	Sisma Y SLV	0	19.5	0	0	1.0E2	1.126
18985	5474	Sisma X SLD	19.2	0	0	0	1.0E2	1.126	18986	5474	Sisma Y SLD	0	19.2	0	0	1.0E2	1.126
18987	5475	Sisma X SLV	25.4	0	0	0	1.3E2	1.126	18988	5475	Sisma Y SLV	0	25.4	0	0	1.3E2	1.126
18989	5475	Sisma X SLD	25	0	0	0	1.3E2	1.126	18990	5475	Sisma Y SLD	0	25	0	0	1.3E2	1.126
18991	5476	Sisma X SLV	17.5	0	0	0	91.065	1.126	18992	5476	Sisma Y SLV	0	17.5	0	0	91.065	1.126
18993	5476	Sisma X SLD	17.2	0	0	0	91.065	1.126	18994	5476	Sisma Y SLD	0	17.2	0	0	91.065	1.126
18995	5477	Sisma X SLV	27.7	0	0	0	1.4E2	1.126	18996	5477	Sisma Y SLV	0	27.7	0	0	1.4E2	1.126
18997	5477	Sisma X SLD	27.3	0	0	0	1.4E2	1.126	18998	5477	Sisma Y SLD	0	27.3	0	0	1.4E2	1.126
18999	5478	Sisma X SLV	66.4	0	0	0	3.5E2	1.126	19000	5478	Sisma Y SLV	0	66.4	0	0	3.5E2	1.126
19001	5478	Sisma X SLD	65.3	0	0	0	3.5E2	1.126	19002	5478	Sisma Y SLD	0	65.3	0	0	3.5E2	1.126
19003	5479	Sisma X SLV	17.8	0	0	0	92.787	1.126	19004	5479	Sisma Y SLV	0	17.8	0	0	92.787	1.126
19005	5479	Sisma X SLD	17.6	0	0	0	92.787	1.126	19006	5479	Sisma Y SLD	0	17.6	0	0	92.787	1.126
19007	5480	Sisma X SLV	26.3	0	0	0	1.4E2	1.126	19008	5480	Sisma Y SLV	0	26.3	0	0	1.4E2	1.126
19009	5480	Sisma X SLD	25.8	0	0	0	1.4E2	1.126	19010	5480	Sisma Y SLD	0	25.8	0	0	1.4E2	1.126
19011	5481	Sisma X SLV	33.3	0	0	0	173.25	1.126	19012	5481	Sisma Y SLV	0	33.3	0	0	173.25	1.126
19013	5481	Sisma X SLD	32.8	0	0	0	173.25	1.126	19014	5481	Sisma Y SLD	0	32.8	0	0	173.25	1.126
19015	5482	Sisma X SLV	22.2	0	0	0	115.5	1.126	19016	5482	Sisma Y SLV	0	22.2	0	0	115.5	1.126
19017	5482	Sisma X SLD	21.8	0	0	0	115.5	1.126	19018	5482	Sisma Y SLD	0	21.8	0	0	115.5	1.126
19019	5483	Sisma X SLV	22.2	0	0	0	115.5	1.126	19020	5483	Sisma Y SLV	0	22.2	0	0	115.5	1.126
19021	5483	Sisma X SLD	21.8	0	0	0	115.5	1.126	19022	5483	Sisma Y SLD	0	21.8	0	0	115.5	1.126
19023	5484	Sisma X SLV	22.2	0	0	0	115.5	1.126	19024	5484	Sisma Y SLV	0	22.2	0	0	115.5	1.126
19025	5484	Sisma X SLD	21.8	0	0	0	115.5	1.126	19026	5484	Sisma Y SLD	0	21.8	0	0	115.5	1.126
19027	5485	Sisma X SLV	57.7	0	0	0	3.0E2	1.126	19028	5485	Sisma Y SLV	0	57.7	0	0	3.0E2	1.126
19029	5485	Sisma X SLD	56.8	0	0	0	3.0E2	1.126	19030	5485	Sisma Y SLD	0	56.8	0	0	3.0E2	1.126
19031	5486	Sisma X SLV	60.8	0	0	0	316.45	1.126	19032	5486	Sisma Y SLV	0	60.8	0	0	316.45	1.126
19033	5486	Sisma X SLD	59.9	0	0	0	316.45	1.126	19034	5486	Sisma Y SLD	0	59.9	0	0	316.45	1.126
19035	5487	Sisma X SLV	60	0	0	0	3.1E2	1.126	19036	5487	Sisma Y SLV	0	60	0	0	3.1E2	1.126
19037	5487	Sisma X SLD	59.1	0	0	0	3.1E2	1.126	19038	5487	Sisma Y SLD	0	59.1	0	0	3.1E2	1.126
19039	5488	Sisma X SLV	71	0	0	0	3.7E2	1.126	19040	5488	Sisma Y SLV	0	71	0	0	3.7E2	1.126
19041	5488	Sisma X SLD	69.9	0	0	0	3.7E2	1.126	19042	5488	Sisma Y SLD	0	69.9	0	0	3.7E2	1.126
19043	5489	Sisma X SLV	24.6	0	0	0	128.22	1.126	19044	5489	Sisma Y SLV	0	24.6	0	0	128.22	1.126
19045	5489	Sisma X SLD	24.3	0	0	0	128.22	1.126	19046	5489	Sisma Y SLD	0	24.3	0	0	128.22	1.126
19047	5490	Sisma X SLV	24.7	0	0	0	1.3E2	1.126	19048	5490	Sisma Y SLV	0	24.7	0	0	1.3E2	1.126
19049	5490	Sisma X SLD	24.3	0	0	0	1.3E2	1.126	19050	5490	Sisma Y SLD	0	24.3	0	0	1.3E2	1.126
19051	5491	Sisma X SLV	23.5	0	0	0	1.2E2	1.126	19052	5491	Sisma Y SLV	0	23.5	0	0	1.2E2	1.126
19053	5491	Sisma X SLD	23.1	0	0	0	1.2E2	1.126	19054	5491	Sisma Y SLD	0	23.1	0	0	1.2E2	1.126
19055	5492	Sisma X SLV	23.5	0	0	0	1.2E2	1.126	19056	5492	Sisma Y SLV	0	23.5	0	0	1.2E2	1.126
19057	5492	Sisma X SLD	23.1	0	0	0	1.2E2	1.126	19058	5492	Sisma Y SLD	0	23.1	0	0	1.2E2	1.126
19059	5493	Sisma X SLV	14.8	0	0	0	76.945	1.126	19060	5493	Sisma Y SLV	0	14.8	0	0	76.945	1.126
19061	5493	Sisma X SLD	14.6	0	0	0	76.945	1.126	19062	5493	Sisma Y SLD	0	14.6	0	0	76.945	1.126
19063	5494	Sisma X SLV	23.4	0	0	0	1.2E2	1.126	19064	5494	Sisma Y SLV	0	23.4	0	0	1.2E2	1.126
19065	5494	Sisma X SLD	23	0	0	0	1.2E2	1.126	19066	5494	Sisma Y SLD	0	23	0	0	1.2E2	1.126
19067	5495	Sisma X SLV	78.8	0	0	0	4.1E2	1.126	19068	5495	Sisma Y SLV	0	78.8	0	0	4.1E2	1.126
19069	5495	Sisma X SLD	77.5	0	0	0	4.1E2	1.126	19070	5495	Sisma Y SLD	0	77.5	0	0	4.1E2	1.126
19071	5496	Sisma X SLV	33.3	0	0	0	173.25	1.126	19072	5496	Sisma Y SLV	0	33.3	0	0	173.25	1.126
19073	5496	Sisma X SLD	32.8	0	0	0	173.25	1.126	19074	5496	Sisma Y SLD	0	32.8	0	0	173.25	1.126
19075	5497	Sisma X SLV	18.4	0	0	0	95.961	1.126	19076	5497	Sisma Y SLV	0	18.4	0	0	95.961	1.126
19077	5497	Sisma X SLD	18.2	0	0	0	95.961	1.126	19078	5497	Sisma Y SLD	0	18.2	0	0	95.961	1.126
19079	5498	Sisma X SLV	20.4	0	0	0	1.1E2	1.126	19080	5498	Sisma Y SLV	0	20.4	0	0	1.1E2	1.126
19081	5498	Sisma X SLD	20.1	0	0	0	1.1E2	1.126	19082	5498	Sisma Y SLD	0	20.1	0	0	1.1E2	1.126
19083	5499	Sisma X SLV	29.6	0	0	0	1.5E2	1.127	19084	5499	Sisma Y SLV	0	29.6	0	0	1.5E2	1.127
19085	5499	Sisma X SLD	29.1	0	0	0	1.5E2	1.127	19086	5499	Sisma Y SLD	0	29.1	0	0	1.5E2	1.127
19087	5500	Sisma X SLV	29.7	0	0	0	1.5E2	1.128	19088	5500	Sisma Y SLV	0	29.7	0	0	1.5E2	1.128
19089	5500	Sisma X SLD	29.2	0	0	0	1.5E2	1.128	19090	5500	Sisma Y SLD	0	29.2	0	0	1.5E2	1.128
19091	5501	Sisma X SLV	29.7	0	0	0	1.5E2	1.129	19092	5501	Sisma Y SLV	0	29.7	0	0	1.5E2	1.129
19093	5501	Sisma X SLD	29.3	0	0	0	1.5E2	1.129	19094	5501	Sisma Y SLD	0	29.3	0	0	1.5E2	1.129
19095	5502	Sisma X SLV	28.8	0	0	0	1.5E2	1.129	19096	5502	Sisma Y SLV	0	28.8	0	0	1.5E2	1.129
19097	5502	Sisma X SLD	28.3	0	0	0	1.5E2	1.129	19098	5502	Sisma Y SLD	0	28.3	0	0	1.5E2	1.129
19099	5503	Sisma X SLV	46.2	0	0	0	2.4E2	1.13	19100	5503	Sisma Y SLV	0	46.2	0	0	2.4E2	1.13
19101	5503	Sisma X SLD	45.5	0	0	0	2.4E2	1.13	19102	5503	Sisma Y SLD	0	45.5	0	0	2.4E2	1.13
19103	5504	Sisma X SLV	46.2	0	0	0	2.4E2	1.13	19104	5504	Sisma Y SLV	0	46.2	0	0	2.4E2	1.13
19105	5504	Sisma X SLD	45.5	0	0	0	2.4E2	1.13	19106	5504	Sisma Y SLD	0	45.5	0	0	2.4E2	1.13
19107	5505	Sisma X SLV	29.9	0	0	0	1.5E2	1.131	19108	5505	Sisma Y SLV	0	29.9	0	0	1.5E2	1.131
19109	5505	Sisma X SLD	29.4	0	0	0	1.5E2	1.131	19110	5505	Sisma Y SLD	0	29.4	0	0	1.5E2	1.131
19111	5506	Sisma X SLV	25.1	0	0	0	1.3E2	1.132	19112	5506	Sisma Y SLV	0	25.1	0	0	1.3E2	1.132
19113	5506	Sisma X SLD	24.7	0	0	0	1.3E2	1.132	19114	5506	Sisma Y SLD	0	24.7	0	0	1.3E2	1.132
19115	5507	Sisma X SLV	48.1	0	0	0	2.5E2	1.132	19116	5507	Sisma Y SLV	0	48.1	0	0	2.5E2	1.132
19117	5507	Sisma X SLD	47.4	0	0	0	2.5E2	1.132	19118	5507	Sisma Y SLD	0	47.4	0	0	2.5E2	1.132
19119	5508	Sisma X SLV	48.1	0	0	0	2.5E2	1.132	19120	5508	Sisma Y SLV	0	48.1	0	0	2.5E2	1.132
19121	5508	Sisma X SLD	47.4	0	0	0	2.5E2	1.132	19122	5508	Sisma Y SLD	0	47.4	0	0	2.5E2	1.132
19123	5509	Sisma X SLV	31.6	0	0	0	163.73	1.132	19124	5509	Sisma Y SLV	0	31.6	0	0	163.73	1.132
19125	5509	Sisma X SLD	31.1	0	0	0	163.73	1.132	19126	5509	Sisma Y SLD	0	31.1	0	0	163.73	1.132
19127	5510	Sisma X SLV	30.1	0	0	0	1.6E2	1.132	19128	5510	Sisma Y SLV	0	30.1	0	0	1.6E2	1.132
19129	5510	Sisma X SLD	29.6	0	0	0	1.6E2	1.132	19130	5510	Sisma Y SLD	0	29.6	0	0	1.6E2	1.132
19131	5511	Sisma X SLV	29	0	0	0	1.5E2	1.134	19132	5511	Sisma Y SLV	0	29	0	0	1.5E2	1.134
19133	5511	Sisma X SLD	28.6	0	0	0	1.5E2	1.134	19134	5511	Sisma Y SLD	0	28.6	0	0	1.5E2	1.134
19135	5512	Sisma X SLV	45.4	0	0	0	2.3E2	1.134	19136	5512	Sisma Y SLV	0	45.4	0	0	2.3E2	1.134
19137	5512	Sisma X SLD	44.7	0	0	0	2.3E2	1.134	19138	5512	Sisma Y SLD	0	44.7	0	0	2.3E2	1.134
19139	5513	Sisma X SLV	30.4	0	0	0	157.15	1.135	19140	5513	Sisma Y SLV	0	30.4	0	0	157.15	1.135
19141	5513	Sisma X SLD	30	0	0	0	157.15	1.135	19142	5513	Sisma Y SLD	0	30	0	0	157.15	1.135
19143	5514	Sisma X SLV	47	0	0	0	242.18	1.137	19144	5514	Sisma Y SLV	0	47	0	0	242.18	1.137
19145	5514	Sisma X SLD	46.2	0	0	0	242.18	1.137	19146	5514	Sisma Y SLD	0	46.2	0	0	242.18	1.137
19147	5515	Sisma X SLV	47	0	0	0	242.18	1.137	19148	5515	Sisma Y SLV	0	47	0	0	242.18	1.137
19149	5515	Sisma X SLD	46.2	0	0	0	242.18	1.137	19150	5515	Sisma Y SLD	0	46.2	0	0	242.18	1.137
19151	5516	Sisma X SLV	48.8	0	0	0	2.5E2	1.138	19152	5516	Sisma Y SLV	0	48.8	0	0	2.5E2	1.138
19153	5516	Sisma X SLD	48.1	0	0	0	2.5E2	1.138	19154	5516	Sisma Y SLD	0	48.1	0	0	2.5E2	1.138
19155	5517	Sisma X SLV	48.8	0	0	0	2.5E2	1.138	19156	5517	Sisma Y SLV	0	48.8	0	0	2.5E2	1.138
19157	5517	Sisma X SLD	48.1	0	0	0	2.5E2	1.138	19158	5517	Sisma Y SLD	0	48.1	0	0	2.5E2	1.138
19159	5518	Sisma X SLV	24.8	0	0	0	1.3E2	1.138	19160	5518	Sisma Y SLV	0	24.8	0	0	1.3E2	1.138
19161	5518	Sisma X SLD	24.4	0	0	0	1.3E2	1.138	19162	5518	Sisma Y SLD	0	24.4	0	0	1.3E2	1.138
19163	5519	Sisma X SLV	24.1	0	0	0	1.2E2	1.139	19164	5519	Sisma Y SLV	0	24.1	0	0	1.2E2	1.139

muratura

Indice	Nodo	Condizione	Fx	Fy	Fz	Mz	Peso	Gamma	Indice	Nodo	Condizione	Fx	Fy	Fz	Mz	Peso	Gamma
19165	5519	Sisma X SLD	23.7	0	0	0	1.2E2	1.139	19166	5519	Sisma Y SLD	0	23.7	0	0	1.2E2	1.139
19167	5520	Sisma X SLV	29.3	0	0	0	1.5E2	1.139	19168	5520	Sisma Y SLV	0	29.3	0	0	1.5E2	1.139
19169	5520	Sisma X SLD	28.8	0	0	0	1.5E2	1.139	19170	5520	Sisma Y SLD	0	28.8	0	0	1.5E2	1.139
19171	5521	Sisma X SLV	31	0	0	0	1.6E2	1.14	19172	5521	Sisma Y SLV	0	31	0	0	1.6E2	1.14
19173	5521	Sisma X SLD	30.5	0	0	0	1.6E2	1.14	19174	5521	Sisma Y SLD	0	30.5	0	0	1.6E2	1.14
19175	5522	Sisma X SLV	40.7	0	0	0	2.1E2	1.14	19176	5522	Sisma Y SLV	0	40.7	0	0	2.1E2	1.14
19177	5522	Sisma X SLD	40.1	0	0	0	2.1E2	1.14	19178	5522	Sisma Y SLD	0	40.1	0	0	2.1E2	1.14
19179	5523	Sisma X SLV	40.7	0	0	0	2.1E2	1.14	19180	5523	Sisma Y SLV	0	40.7	0	0	2.1E2	1.14
19181	5523	Sisma X SLD	40.1	0	0	0	2.1E2	1.14	19182	5523	Sisma Y SLD	0	40.1	0	0	2.1E2	1.14
19183	5524	Sisma X SLV	32.5	0	0	0	1.7E2	1.141	19184	5524	Sisma Y SLV	0	32.5	0	0	1.7E2	1.141
19185	5524	Sisma X SLD	31.9	0	0	0	1.7E2	1.141	19186	5524	Sisma Y SLD	0	31.9	0	0	1.7E2	1.141
19187	5525	Sisma X SLV	46.2	0	0	0	2.4E2	1.142	19188	5525	Sisma Y SLV	0	46.2	0	0	2.4E2	1.142
19189	5525	Sisma X SLD	45.5	0	0	0	2.4E2	1.142	19190	5525	Sisma Y SLD	0	45.5	0	0	2.4E2	1.142
19191	5526	Sisma X SLV	48.1	0	0	0	246.26	1.144	19192	5526	Sisma Y SLV	0	48.1	0	0	246.26	1.144
19193	5526	Sisma X SLD	47.3	0	0	0	246.26	1.144	19194	5526	Sisma Y SLD	0	47.3	0	0	246.26	1.144
19195	5527	Sisma X SLV	48.1	0	0	0	246.26	1.144	19196	5527	Sisma Y SLV	0	48.1	0	0	246.26	1.144
19197	5527	Sisma X SLD	47.3	0	0	0	246.26	1.144	19198	5527	Sisma Y SLD	0	47.3	0	0	246.26	1.144
19199	5528	Sisma X SLV	49.9	0	0	0	2.6E2	1.144	19200	5528	Sisma Y SLV	0	49.9	0	0	2.6E2	1.144
19201	5528	Sisma X SLD	49.1	0	0	0	2.6E2	1.144	19202	5528	Sisma Y SLD	0	49.1	0	0	2.6E2	1.144
19203	5529	Sisma X SLV	49.9	0	0	0	2.6E2	1.144	19204	5529	Sisma Y SLV	0	49.9	0	0	2.6E2	1.144
19205	5529	Sisma X SLD	49.1	0	0	0	2.6E2	1.144	19206	5529	Sisma Y SLD	0	49.1	0	0	2.6E2	1.144
19207	5530	Sisma X SLV	29.7	0	0	0	1.5E2	1.146	19208	5530	Sisma Y SLV	0	29.7	0	0	1.5E2	1.146
19209	5530	Sisma X SLD	29.3	0	0	0	1.5E2	1.146	19210	5530	Sisma Y SLD	0	29.3	0	0	1.5E2	1.146
19211	5531	Sisma X SLV	17.7	0	0	0	90.173	1.148	19212	5531	Sisma Y SLV	0	17.7	0	0	90.173	1.148
19213	5531	Sisma X SLD	17.4	0	0	0	90.173	1.148	19214	5531	Sisma Y SLD	0	17.4	0	0	90.173	1.148
19215	5532	Sisma X SLV	11.1	0	0	0	56.8	1.148	19216	5532	Sisma Y SLV	0	11.1	0	0	56.8	1.148
19217	5532	Sisma X SLD	11	0	0	0	56.8	1.148	19218	5532	Sisma Y SLD	0	11	0	0	56.8	1.148
19219	5533	Sisma X SLV	11.3	0	0	0	57.641	1.148	19220	5533	Sisma Y SLV	0	11.3	0	0	57.641	1.148
19221	5533	Sisma X SLD	11.1	0	0	0	57.641	1.148	19222	5533	Sisma Y SLD	0	11.1	0	0	57.641	1.148
19223	5534	Sisma X SLV	22	0	0	0	1.1E2	1.148	19224	5534	Sisma Y SLV	0	22	0	0	1.1E2	1.148
19225	5534	Sisma X SLD	21.7	0	0	0	1.1E2	1.148	19226	5534	Sisma Y SLD	0	21.7	0	0	1.1E2	1.148
19227	5535	Sisma X SLV	59.9	0	0	0	3.1E2	1.149	19228	5535	Sisma Y SLV	0	59.9	0	0	3.1E2	1.149
19229	5535	Sisma X SLD	59	0	0	0	3.1E2	1.149	19230	5535	Sisma Y SLD	0	59	0	0	3.1E2	1.149
19231	5536	Sisma X SLV	50.9	0	0	0	259.82	1.149	19232	5536	Sisma Y SLV	0	50.9	0	0	259.82	1.149
19233	5536	Sisma X SLD	50.1	0	0	0	259.82	1.149	19234	5536	Sisma Y SLD	0	50.1	0	0	259.82	1.149
19235	5537	Sisma X SLV	51.1	0	0	0	2.6E2	1.15	19236	5537	Sisma Y SLV	0	51.1	0	0	2.6E2	1.15
19237	5537	Sisma X SLD	50.3	0	0	0	2.6E2	1.15	19238	5537	Sisma Y SLD	0	50.3	0	0	2.6E2	1.15
19239	5538	Sisma X SLV	33.7	0	0	0	1.7E2	1.15	19240	5538	Sisma Y SLV	0	33.7	0	0	1.7E2	1.15
19241	5538	Sisma X SLD	33.1	0	0	0	1.7E2	1.15	19242	5538	Sisma Y SLD	0	33.1	0	0	1.7E2	1.15
19243	5539	Sisma X SLV	47.4	0	0	0	2.4E2	1.151	19244	5539	Sisma Y SLV	0	47.4	0	0	2.4E2	1.151
19245	5539	Sisma X SLD	46.6	0	0	0	2.4E2	1.151	19246	5539	Sisma Y SLD	0	46.6	0	0	2.4E2	1.151
19247	5540	Sisma X SLV	49.7	0	0	0	2.5E2	1.152	19248	5540	Sisma Y SLV	0	49.7	0	0	2.5E2	1.152
19249	5540	Sisma X SLD	48.9	0	0	0	2.5E2	1.152	19250	5540	Sisma Y SLD	0	48.9	0	0	2.5E2	1.152
19251	5541	Sisma X SLV	49.7	0	0	0	2.5E2	1.152	19252	5541	Sisma Y SLV	0	49.7	0	0	2.5E2	1.152
19253	5541	Sisma X SLD	48.9	0	0	0	2.5E2	1.152	19254	5541	Sisma Y SLD	0	48.9	0	0	2.5E2	1.152
19255	5542	Sisma X SLV	51.5	0	0	0	2.6E2	1.152	19256	5542	Sisma Y SLV	0	51.5	0	0	2.6E2	1.152
19257	5542	Sisma X SLD	50.7	0	0	0	2.6E2	1.152	19258	5542	Sisma Y SLD	0	50.7	0	0	2.6E2	1.152
19259	5543	Sisma X SLV	51.6	0	0	0	2.6E2	1.152	19260	5543	Sisma Y SLV	0	51.6	0	0	2.6E2	1.152
19261	5543	Sisma X SLD	50.7	0	0	0	2.6E2	1.152	19262	5543	Sisma Y SLD	0	50.7	0	0	2.6E2	1.152
19263	5544	Sisma X SLV	24	0	0	0	122.01	1.153	19264	5544	Sisma Y SLV	0	24	0	0	122.01	1.153
19265	5544	Sisma X SLD	23.6	0	0	0	122.01	1.153	19266	5544	Sisma Y SLD	0	23.6	0	0	122.01	1.153
19267	5545	Sisma X SLV	30.4	0	0	0	1.5E2	1.153	19268	5545	Sisma Y SLV	0	30.4	0	0	1.5E2	1.153
19269	5545	Sisma X SLD	30	0	0	0	1.5E2	1.153	19270	5545	Sisma Y SLD	0	30	0	0	1.5E2	1.153
19271	5546	Sisma X SLV	43	0	0	0	2.2E2	1.156	19272	5546	Sisma Y SLV	0	43	0	0	2.2E2	1.156
19273	5546	Sisma X SLD	42.3	0	0	0	2.2E2	1.156	19274	5546	Sisma Y SLD	0	42.3	0	0	2.2E2	1.156
19275	5547	Sisma X SLV	43	0	0	0	2.2E2	1.156	19276	5547	Sisma Y SLV	0	43	0	0	2.2E2	1.156
19277	5547	Sisma X SLD	42.3	0	0	0	2.2E2	1.156	19278	5547	Sisma Y SLD	0	42.3	0	0	2.2E2	1.156
19279	5548	Sisma X SLV	35.5	0	0	0	1.8E2	1.161	19280	5548	Sisma Y SLV	0	35.5	0	0	1.8E2	1.161
19281	5548	Sisma X SLD	34.9	0	0	0	1.8E2	1.161	19282	5548	Sisma Y SLD	0	34.9	0	0	1.8E2	1.161
19283	5549	Sisma X SLV	49.4	0	0	0	2.5E2	1.162	19284	5549	Sisma Y SLV	0	49.4	0	0	2.5E2	1.162
19285	5549	Sisma X SLD	48.6	0	0	0	2.5E2	1.162	19286	5549	Sisma Y SLD	0	48.6	0	0	2.5E2	1.162
19287	5550	Sisma X SLV	52.1	0	0	0	2.6E2	1.162	19288	5550	Sisma Y SLV	0	52.1	0	0	2.6E2	1.162
19289	5550	Sisma X SLD	51.3	0	0	0	2.6E2	1.162	19290	5550	Sisma Y SLD	0	51.3	0	0	2.6E2	1.162
19291	5551	Sisma X SLV	52.1	0	0	0	2.6E2	1.162	19292	5551	Sisma Y SLV	0	52.1	0	0	2.6E2	1.162
19293	5551	Sisma X SLD	51.3	0	0	0	2.6E2	1.162	19294	5551	Sisma Y SLD	0	51.3	0	0	2.6E2	1.162
19295	5552	Sisma X SLV	54.1	0	0	0	2.7E2	1.162	19296	5552	Sisma Y SLV	0	54.1	0	0	2.7E2	1.162
19297	5552	Sisma X SLD	53.3	0	0	0	2.7E2	1.162	19298	5552	Sisma Y SLD	0	53.3	0	0	2.7E2	1.162
19299	5553	Sisma X SLV	54.2	0	0	0	2.7E2	1.162	19300	5553	Sisma Y SLV	0	54.2	0	0	2.7E2	1.162
19301	5553	Sisma X SLD	53.3	0	0	0	2.7E2	1.162	19302	5553	Sisma Y SLD	0	53.3	0	0	2.7E2	1.162
19303	5554	Sisma X SLV	31.7	0	0	0	1.6E2	1.163	19304	5554	Sisma Y SLV	0	31.7	0	0	1.6E2	1.163
19305	5554	Sisma X SLD	31.2	0	0	0	1.6E2	1.163	19306	5554	Sisma Y SLD	0	31.2	0	0	1.6E2	1.163
19307	5555	Sisma X SLV	27.5	0	0	0	1.4E2	1.164	19308	5555	Sisma Y SLV	0	27.5	0	0	1.4E2	1.164
19309	5555	Sisma X SLD	27	0	0	0	1.4E2	1.164	19310	5555	Sisma Y SLD	0	27	0	0	1.4E2	1.164
19311	5556	Sisma X SLV	50.1	0	0	0	2.5E2	1.164	19312	5556	Sisma Y SLV	0	50.1	0	0	2.5E2	1.164
19313	5556	Sisma X SLD	49.3	0	0	0	2.5E2	1.164	19314	5556	Sisma Y SLD	0	49.3	0	0	2.5E2	1.164
19315	5557	Sisma X SLV	46.7	0	0	0	2.4E2	1.164	19316	5557	Sisma Y SLV	0	46.7	0	0	2.4E2	1.164
19317	5557	Sisma X SLD	45.9	0	0	0	2.4E2	1.164	19318	5557	Sisma Y SLD	0	45.9	0	0	2.4E2	1.164
19319	5558	Sisma X SLV	39.2	0	0	0	196.42	1.169	19320	5558	Sisma Y SLV	0	39.2	0	0	196.42	1.169
19321	5558	Sisma X SLD	38.5	0	0	0	196.42	1.169	19322	5558	Sisma Y SLD	0	38.5	0	0	196.42	1.169
19323	5559	Sisma X SLV	39.2	0	0	0	196.42	1.169	19324	5559	Sisma Y SLV	0	39.2	0	0	196.42	1.169
19325	5559	Sisma X SLD	38.5	0	0	0	196.42	1.169	19326	5559	Sisma Y SLD	0	38.5	0	0	196.42	1.169
19327	5560	Sisma X SLV	52.2	0	0	0	2.6E2	1.169	19328	5560	Sisma Y SLV	0	52.2	0	0	2.6E2	1.169
19329	5560	Sisma X SLD	51.3	0	0	0	2.6E2	1.169	19330	5560	Sisma Y SLD	0	51.3	0	0	2.6E2	1.169
19331	5561	Sisma X SLV	36.7	0	0	0	1.8E2	1.169	19332	5561	Sisma Y SLV	0	36.7	0	0	1.8E2	1.169
19333	5561	Sisma X SLD	36.1	0	0	0	1.8E2	1.169	19334	5561	Sisma Y SLD	0	36.1	0	0	1.8E2	1.169
19335	5562	Sisma X SLV	36.7	0	0	0	1.8E2	1.169	19336	5562	Sisma Y SLV	0	36.7	0	0	1.8E2	1.169
19337	5562	Sisma X SLD	36.1	0	0	0	1.8E2	1.169	19338	5562	Sisma Y SLD	0	36.1	0	0	1.8E2	1.169
19339	5563	Sisma X SLV	52.8	0	0	0	2.6E2	1.17	19340	5563	Sisma Y SLV	0	52.8	0	0	2.6E2	1.17
19341	5563	Sisma X SLD	52	0	0	0	2.6E2	1.17	19342	5563	Sisma Y SLD	0	52	0	0	2.6E2	1.17
19343	5564	Sisma X SLV	47.6	0	0	0	2.4E2	1.17	19344	5564	Sisma Y SLV	0	47.6	0	0	2.4E2	1.17
19345	5564	Sisma X SLD	46.9	0	0	0	2.4E2	1.17	19346	5564	Sisma Y SLD	0	46.9	0	0	2.4E2	1.17
19347	5565	Sisma X SLV	50.3	0	0	0	2.5E2	1.173	19348	5565	Sisma Y SLV	0	50.3	0	0	2.5E2	1.173
19349	5565	Sisma X SLD	49.5	0	0	0	2.5E2	1.173	19350	5565	Sisma Y SLD	0	49.5	0	0	2.5E2	1.173
19351	5566	Sisma X SLV	43.6	0	0	0	2.2E2	1.173	19352	5566	Sisma Y SLV	0	43.6	0	0	2.2E2	1.173
19353	5566	Sisma X SLD	42.9	0	0	0	2.2E2	1.173	19354	5566	Sisma Y SLD	0	42.9	0	0	2.2E2	1.173
19355	5567	Sisma X SLV	43.6	0	0	0	2.2E2	1.173	19356	5567	Sisma Y SLV	0	43.6	0	0	2.2E2	1.173
19357	5567	Sisma X SLD	42.9	0	0	0	2.2E2	1.173	19358	5567	Sisma Y SLD	0	42.9	0	0	2.2E2	1.173
19359	5568	Sisma X SLV	32.2	0	0	0	1.6E2	1.174	19360	5568	Sisma Y SLV	0	32.2	0	0	1.6E2	1.174
19361	5568	Sisma X SLD	31.7	0	0	0	1.6E2	1.174	19362	5568	Sisma Y SLD	0	31.7	0	0	1.6E2	1.174
19363	5569	Sisma X SLV	25.8	0	0	0	1.3E2	1.174	19364	5569	Sisma Y SLV	0	25.8	0	0	1.3E2	1.174
19365	5569	Sisma X SLD	25.4	0	0	0	1.3E2	1.174	19366	5569	Sisma Y SLD	0	25.4	0	0	1.3E2	1.174

Indice	Nodo	Condizione	Fx	Fy	Fz	Mz	Peso	Gamma	Indice	Nodo	Condizione	Fx	Fy	Fz	Mz	Peso	Gamma
19367	5570	Sisma X SLV	22.7	0	0	0	1.1E2	1.174	19368	5570	Sisma Y SLV	0	22.7	0	0	1.1E2	1.174
19369	5570	Sisma X SLD	22.3	0	0	0	1.1E2	1.174	19370	5570	Sisma Y SLD	0	22.3	0	0	1.1E2	1.174
19371	5571	Sisma X SLV	22.7	0	0	0	1.1E2	1.174	19372	5571	Sisma Y SLV	0	22.7	0	0	1.1E2	1.174
19373	5571	Sisma X SLD	22.3	0	0	0	1.1E2	1.174	19374	5571	Sisma Y SLD	0	22.3	0	0	1.1E2	1.174
19375	5572	Sisma X SLV	27.3	0	0	0	1.4E2	1.174	19376	5572	Sisma Y SLV	0	27.3	0	0	1.4E2	1.174
19377	5572	Sisma X SLD	26.9	0	0	0	1.4E2	1.174	19378	5572	Sisma Y SLD	0	26.9	0	0	1.4E2	1.174
19379	5573	Sisma X SLV	27.3	0	0	0	1.4E2	1.174	19380	5573	Sisma Y SLV	0	27.3	0	0	1.4E2	1.174
19381	5573	Sisma X SLD	26.9	0	0	0	1.4E2	1.174	19382	5573	Sisma Y SLD	0	26.9	0	0	1.4E2	1.174
19383	5574	Sisma X SLV	18.6	0	0	0	92.864	1.174	19384	5574	Sisma Y SLV	0	18.6	0	0	92.864	1.174
19385	5574	Sisma X SLD	18.3	0	0	0	92.864	1.174	19386	5574	Sisma Y SLD	0	18.3	0	0	92.864	1.174
19387	5575	Sisma X SLV	16.5	0	0	0	82.196	1.174	19388	5575	Sisma Y SLV	0	16.5	0	0	82.196	1.174
19389	5575	Sisma X SLD	16.2	0	0	0	82.196	1.174	19390	5575	Sisma Y SLD	0	16.2	0	0	82.196	1.174
19391	5576	Sisma X SLV	22.1	0	0	0	1.1E2	1.174	19392	5576	Sisma Y SLV	0	22.1	0	0	1.1E2	1.174
19393	5576	Sisma X SLD	21.8	0	0	0	1.1E2	1.174	19394	5576	Sisma Y SLD	0	21.8	0	0	1.1E2	1.174
19395	5577	Sisma X SLV	22.1	0	0	0	1.1E2	1.174	19396	5577	Sisma Y SLV	0	22.1	0	0	1.1E2	1.174
19397	5577	Sisma X SLD	21.8	0	0	0	1.1E2	1.174	19398	5577	Sisma Y SLD	0	21.8	0	0	1.1E2	1.174
19399	5578	Sisma X SLV	28.3	0	0	0	1.4E2	1.174	19400	5578	Sisma Y SLV	0	28.3	0	0	1.4E2	1.174
19401	5578	Sisma X SLD	27.8	0	0	0	1.4E2	1.174	19402	5578	Sisma Y SLD	0	27.8	0	0	1.4E2	1.174
19403	5579	Sisma X SLV	28.3	0	0	0	1.4E2	1.174	19404	5579	Sisma Y SLV	0	28.3	0	0	1.4E2	1.174
19405	5579	Sisma X SLD	27.8	0	0	0	1.4E2	1.174	19406	5579	Sisma Y SLD	0	27.8	0	0	1.4E2	1.174
19407	5580	Sisma X SLV	27.3	0	0	0	136.53	1.174	19408	5580	Sisma Y SLV	0	27.3	0	0	136.53	1.174
19409	5580	Sisma X SLD	26.9	0	0	0	136.53	1.174	19410	5580	Sisma Y SLD	0	26.9	0	0	136.53	1.174
19411	5581	Sisma X SLV	27.3	0	0	0	1.4E2	1.174	19412	5581	Sisma Y SLV	0	27.3	0	0	1.4E2	1.174
19413	5581	Sisma X SLD	26.9	0	0	0	1.4E2	1.174	19414	5581	Sisma Y SLD	0	26.9	0	0	1.4E2	1.174
19415	5582	Sisma X SLV	24.6	0	0	0	1.2E2	1.174	19416	5582	Sisma Y SLV	0	24.6	0	0	1.2E2	1.174
19417	5582	Sisma X SLD	24.2	0	0	0	1.2E2	1.174	19418	5582	Sisma Y SLD	0	24.2	0	0	1.2E2	1.174
19419	5583	Sisma X SLV	23.6	0	0	0	1.2E2	1.174	19420	5583	Sisma Y SLV	0	23.6	0	0	1.2E2	1.174
19421	5583	Sisma X SLD	23.2	0	0	0	1.2E2	1.174	19422	5583	Sisma Y SLD	0	23.2	0	0	1.2E2	1.174
19423	5584	Sisma X SLV	15	0	0	0	75.135	1.174	19424	5584	Sisma Y SLV	0	15	0	0	75.135	1.174
19425	5584	Sisma X SLD	14.8	0	0	0	75.135	1.174	19426	5584	Sisma Y SLD	0	14.8	0	0	75.135	1.174
19427	5585	Sisma X SLV	36.1	0	0	0	1.8E2	1.176	19428	5585	Sisma Y SLV	0	36.1	0	0	1.8E2	1.176
19429	5585	Sisma X SLD	35.6	0	0	0	1.8E2	1.176	19430	5585	Sisma Y SLD	0	35.6	0	0	1.8E2	1.176
19431	5586	Sisma X SLV	36.1	0	0	0	1.8E2	1.176	19432	5586	Sisma Y SLV	0	36.1	0	0	1.8E2	1.176
19433	5586	Sisma X SLD	35.6	0	0	0	1.8E2	1.176	19434	5586	Sisma Y SLD	0	35.6	0	0	1.8E2	1.176
19435	5587	Sisma X SLV	42.2	0	0	0	2.1E2	1.191	19436	5587	Sisma Y SLV	0	42.2	0	0	2.1E2	1.191
19437	5587	Sisma X SLD	41.5	0	0	0	2.1E2	1.191	19438	5587	Sisma Y SLD	0	41.5	0	0	2.1E2	1.191
19439	5588	Sisma X SLV	72.7	0	0	0	3.6E2	1.191	19440	5588	Sisma Y SLV	0	72.7	0	0	3.6E2	1.191
19441	5588	Sisma X SLD	71.5	0	0	0	3.6E2	1.191	19442	5588	Sisma Y SLD	0	71.5	0	0	3.6E2	1.191
19443	5589	Sisma X SLV	67.1	0	0	0	3.3E2	1.191	19444	5589	Sisma Y SLV	0	67.1	0	0	3.3E2	1.191
19445	5589	Sisma X SLD	66	0	0	0	3.3E2	1.191	19446	5589	Sisma Y SLD	0	66	0	0	3.3E2	1.191
19447	5590	Sisma X SLV	45.9	0	0	0	2.3E2	1.191	19448	5590	Sisma Y SLV	0	45.9	0	0	2.3E2	1.191
19449	5590	Sisma X SLD	45.2	0	0	0	2.3E2	1.191	19450	5590	Sisma Y SLD	0	45.2	0	0	2.3E2	1.191
19451	5591	Sisma X SLV	46.4	0	0	0	2.3E2	1.191	19452	5591	Sisma Y SLV	0	46.4	0	0	2.3E2	1.191
19453	5591	Sisma X SLD	45.7	0	0	0	2.3E2	1.191	19454	5591	Sisma Y SLD	0	45.7	0	0	2.3E2	1.191
19455	5592	Sisma X SLV	71.8	0	0	0	353.36	1.191	19456	5592	Sisma Y SLV	0	71.8	0	0	353.36	1.191
19457	5592	Sisma X SLD	70.7	0	0	0	353.36	1.191	19458	5592	Sisma Y SLD	0	70.7	0	0	353.36	1.191
19459	5593	Sisma X SLV	70.9	0	0	0	348.75	1.191	19460	5593	Sisma Y SLV	0	70.9	0	0	348.75	1.191
19461	5593	Sisma X SLD	69.7	0	0	0	348.75	1.191	19462	5593	Sisma Y SLD	0	69.7	0	0	348.75	1.191
19463	5594	Sisma X SLV	29.5	0	0	0	1.5E2	1.191	19464	5594	Sisma Y SLV	0	29.5	0	0	1.5E2	1.191
19465	5594	Sisma X SLD	29.1	0	0	0	1.5E2	1.191	19466	5594	Sisma Y SLD	0	29.1	0	0	1.5E2	1.191
19467	5595	Sisma X SLV	29.5	0	0	0	1.5E2	1.191	19468	5595	Sisma Y SLV	0	29.5	0	0	1.5E2	1.191
19469	5595	Sisma X SLD	29.1	0	0	0	1.5E2	1.191	19470	5595	Sisma Y SLD	0	29.1	0	0	1.5E2	1.191
19471	5596	Sisma X SLV	29.5	0	0	0	1.5E2	1.191	19472	5596	Sisma Y SLV	0	29.5	0	0	1.5E2	1.191
19473	5596	Sisma X SLD	29.1	0	0	0	1.5E2	1.191	19474	5596	Sisma Y SLD	0	29.1	0	0	1.5E2	1.191
19475	5597	Sisma X SLV	29.5	0	0	0	1.5E2	1.191	19476	5597	Sisma Y SLV	0	29.5	0	0	1.5E2	1.191
19477	5597	Sisma X SLD	29.1	0	0	0	1.5E2	1.191	19478	5597	Sisma Y SLD	0	29.1	0	0	1.5E2	1.191
19479	5598	Sisma X SLV	29.5	0	0	0	1.5E2	1.191	19480	5598	Sisma Y SLV	0	29.5	0	0	1.5E2	1.191
19481	5598	Sisma X SLD	29.1	0	0	0	1.5E2	1.191	19482	5598	Sisma Y SLD	0	29.1	0	0	1.5E2	1.191
19483	5599	Sisma X SLV	29.5	0	0	0	1.5E2	1.191	19484	5599	Sisma Y SLV	0	29.5	0	0	1.5E2	1.191
19485	5599	Sisma X SLD	29.1	0	0	0	1.5E2	1.191	19486	5599	Sisma Y SLD	0	29.1	0	0	1.5E2	1.191
19487	5600	Sisma X SLV	29.5	0	0	0	1.5E2	1.191	19488	5600	Sisma Y SLV	0	29.5	0	0	1.5E2	1.191
19489	5600	Sisma X SLD	29.1	0	0	0	1.5E2	1.191	19490	5600	Sisma Y SLD	0	29.1	0	0	1.5E2	1.191
19491	5601	Sisma X SLV	29.5	0	0	0	1.5E2	1.191	19492	5601	Sisma Y SLV	0	29.5	0	0	1.5E2	1.191
19493	5601	Sisma X SLD	29.1	0	0	0	1.5E2	1.191	19494	5601	Sisma Y SLD	0	29.1	0	0	1.5E2	1.191
19495	5602	Sisma X SLV	29.6	0	0	0	1.5E2	1.191	19496	5602	Sisma Y SLV	0	29.6	0	0	1.5E2	1.191
19497	5602	Sisma X SLD	29.1	0	0	0	1.5E2	1.191	19498	5602	Sisma Y SLD	0	29.1	0	0	1.5E2	1.191
19499	5603	Sisma X SLV	29.7	0	0	0	1.5E2	1.191	19500	5603	Sisma Y SLV	0	29.7	0	0	1.5E2	1.191
19501	5603	Sisma X SLD	29.2	0	0	0	1.5E2	1.191	19502	5603	Sisma Y SLD	0	29.2	0	0	1.5E2	1.191
19503	5604	Sisma X SLV	30	0	0	0	1.5E2	1.191	19504	5604	Sisma Y SLV	0	30	0	0	1.5E2	1.191
19505	5604	Sisma X SLD	29.5	0	0	0	1.5E2	1.191	19506	5604	Sisma Y SLD	0	29.5	0	0	1.5E2	1.191
19507	5605	Sisma X SLV	30.4	0	0	0	1.5E2	1.191	19508	5605	Sisma Y SLV	0	30.4	0	0	1.5E2	1.191
19509	5605	Sisma X SLD	29.9	0	0	0	1.5E2	1.191	19510	5605	Sisma Y SLD	0	29.9	0	0	1.5E2	1.191
19511	5606	Sisma X SLV	30.7	0	0	0	1.5E2	1.191	19512	5606	Sisma Y SLV	0	30.7	0	0	1.5E2	1.191
19513	5606	Sisma X SLD	30.3	0	0	0	1.5E2	1.191	19514	5606	Sisma Y SLD	0	30.3	0	0	1.5E2	1.191
19515	5607	Sisma X SLV	61.8	0	0	0	304	1.191	19516	5607	Sisma Y SLV	0	61.8	0	0	304	1.191
19517	5607	Sisma X SLD	60.8	0	0	0	304	1.191	19518	5607	Sisma Y SLD	0	60.8	0	0	304	1.191
19519	5608	Sisma X SLV	42.1	0	0	0	2.1E2	1.191	19520	5608	Sisma Y SLV	0	42.1	0	0	2.1E2	1.191
19521	5608	Sisma X SLD	41.4	0	0	0	2.1E2	1.191	19522	5608	Sisma Y SLD	0	41.4	0	0	2.1E2	1.191
19523	5609	Sisma X SLV	60.9	0	0	0	3.0E2	1.191	19524	5609	Sisma Y SLV	0	60.9	0	0	3.0E2	1.191
19525	5609	Sisma X SLD	60	0	0	0	3.0E2	1.191	19526	5609	Sisma Y SLD	0	60	0	0	3.0E2	1.191
19527	5610	Sisma X SLV	45.9	0	0	0	2.3E2	1.191	19528	5610	Sisma Y SLV	0	45.9	0	0	2.3E2	1.191
19529	5610	Sisma X SLD	45.2	0	0	0	2.3E2	1.191	19530	5610	Sisma Y SLD	0	45.2	0	0	2.3E2	1.191
19531	5611	Sisma X SLV	47.9	0	0	0	2.4E2	1.191	19532	5611	Sisma Y SLV	0	47.9	0	0	2.4E2	1.191
19533	5611	Sisma X SLD	47.2	0	0	0	2.4E2	1.191	19534	5611	Sisma Y SLD	0	47.2	0	0	2.4E2	1.191
19535	5612	Sisma X SLV	45.9	0	0	0	2.3E2	1.191	19536	5612	Sisma Y SLV	0	45.9	0	0	2.3E2	1.191
19537	5612	Sisma X SLD	45.2	0	0	0	2.3E2	1.191	19538	5612	Sisma Y SLD	0	45.2	0	0	2.3E2	1.191
19539	5613	Sisma X SLV	45.9	0	0	0	2.3E2	1.191	19540	5613	Sisma Y SLV	0	45.9	0	0	2.3E2	1.191
19541	5613	Sisma X SLD	45.2	0	0	0	2.3E2	1.191	19542	5613	Sisma Y SLD	0	45.2	0	0	2.3E2	1.191
19543	5614	Sisma X SLV	45.2	0	0	0	2.2E2	1.191	19544	5614	Sisma Y SLV	0	45.2	0	0	2.2E2	1.191
19545	5614	Sisma X SLD	44.5	0	0	0	2.2E2	1.191	19546	5614	Sisma Y SLD	0	44.5	0	0	2.2E2	1.191
19547	5615	Sisma X SLV	45.9	0	0	0	2.3E2	1.191	19548	5615	Sisma Y SLV	0	45.9	0	0	2.3E2	1.191
19549	5615	Sisma X SLD	45.2	0	0	0	2.3E2	1.191	19550	5615	Sisma Y SLD	0	45.2	0	0	2.3E2	1.191
19551	5616	Sisma X SLV	45.9	0	0	0	2.3E2	1.191	19552	5616	Sisma Y SLV	0	45.9	0	0	2.3E2	1.191
19553	5616	Sisma X SLD	45.2	0	0	0	2.3E2	1.191	19554	5616	Sisma Y SLD	0	45.2	0	0	2.3E2	1.191
19555	5617	Sisma X SLV	46.1	0	0	0	2.3E2	1.191	19556	5617	Sisma Y SLV	0	46.1	0	0	2.3E2	1.191
19557	5617	Sisma X SLD	45.3	0	0	0	2.3E2	1.191	19558	5617	Sisma Y SLD	0	45.3	0	0	2.3E2	1.191
19559	5618	Sisma X SLV	45.4	0	0	0	2.2E2	1.191	19560	5618	Sisma Y SLV	0	45.4	0	0	2.2E2	1.191
19561	5618	Sisma X SLD	44.7	0	0	0	2.2E2	1.191	19562	5618	Sisma Y SLD	0	44.7	0	0	2.2E2	1.191
19563	5619	Sisma X SLV	45.9	0	0	0	225.77	1.191	19564	5619	Sisma Y SLV	0	45.9	0	0	225.77	1.191
19565	5619	Sisma X SLD	45.1	0	0	0	225.77	1.191	19566	5619	Sisma Y SLD	0	45.1	0	0	225.77	1.191
19567	5620	Sisma X SLV	45.7	0	0	0	2.2E2	1.191	19568	5620	Sisma Y SLV	0	45.7	0	0	2.2E2	1.191
19569	5620	Sisma X SLD	45	0	0	0	2.2E2	1.191	19570	5620	Sisma Y SLD	0	45	0	0	2.2E2	1.191
19571	5621	Sisma X SLV	46.2	0	0	0	227.31	1.191	19572	5621	Sisma Y SLV	0	46.2	0	0	227.31	1.191
19573	5621	Sisma X SLD	45.5	0	0	0	227.31	1.191	19574	5621	Sisma Y SLD	0	45.5	0	0	227.31	1.191

Indice	Nodo	Condizione	Fx	Fy	Fz	Mz	Peso	Gamma	Indice	Nodo	Condizione	Fx	Fy	Fz	Mz	Peso	Gamma
19575	5622	Sisma X SLV	45.7	0	0	0	2.3E2	1.191	19576	5622	Sisma Y SLV	0	45.7	0	0	2.3E2	1.191
19577	5622	Sisma X SLD	45	0	0	0	2.3E2	1.191	19578	5622	Sisma Y SLD	0	45	0	0	2.3E2	1.191
19579	5623	Sisma X SLV	46.6	0	0	0	2.3E2	1.191	19580	5623	Sisma Y SLV	0	46.6	0	0	2.3E2	1.191
19581	5623	Sisma X SLD	45.9	0	0	0	2.3E2	1.191	19582	5623	Sisma Y SLD	0	45.9	0	0	2.3E2	1.191
19583	5624	Sisma X SLV	45.2	0	0	0	2.2E2	1.191	19584	5624	Sisma Y SLV	0	45.2	0	0	2.2E2	1.191
19585	5624	Sisma X SLD	44.5	0	0	0	2.2E2	1.191	19586	5624	Sisma Y SLD	0	44.5	0	0	2.2E2	1.191
19587	5625	Sisma X SLV	29	0	0	0	1.4E2	1.191	19588	5625	Sisma Y SLV	0	29	0	0	1.4E2	1.191
19589	5625	Sisma X SLD	28.5	0	0	0	1.4E2	1.191	19590	5625	Sisma Y SLD	0	28.5	0	0	1.4E2	1.191
19591	5626	Sisma X SLV	47.9	0	0	0	2.4E2	1.191	19592	5626	Sisma Y SLV	0	47.9	0	0	2.4E2	1.191
19593	5626	Sisma X SLD	47.1	0	0	0	2.4E2	1.191	19594	5626	Sisma Y SLD	0	47.1	0	0	2.4E2	1.191
19595	5627	Sisma X SLV	45.4	0	0	0	2.2E2	1.191	19596	5627	Sisma Y SLV	0	45.4	0	0	2.2E2	1.191
19597	5627	Sisma X SLD	44.7	0	0	0	2.2E2	1.191	19598	5627	Sisma Y SLD	0	44.7	0	0	2.2E2	1.191
19599	5628	Sisma X SLV	47.9	0	0	0	2.4E2	1.191	19600	5628	Sisma Y SLV	0	47.9	0	0	2.4E2	1.191
19601	5628	Sisma X SLD	47.1	0	0	0	2.4E2	1.191	19602	5628	Sisma Y SLD	0	47.1	0	0	2.4E2	1.191
19603	5629	Sisma X SLV	44	0	0	0	2.2E2	1.191	19604	5629	Sisma Y SLV	0	44	0	0	2.2E2	1.191
19605	5629	Sisma X SLD	43.3	0	0	0	2.2E2	1.191	19606	5629	Sisma Y SLD	0	43.3	0	0	2.2E2	1.191
19607	5630	Sisma X SLV	46.5	0	0	0	2.3E2	1.191	19608	5630	Sisma Y SLV	0	46.5	0	0	2.3E2	1.191
19609	5630	Sisma X SLD	45.8	0	0	0	2.3E2	1.191	19610	5630	Sisma Y SLD	0	45.8	0	0	2.3E2	1.191
19611	5631	Sisma X SLV	29	0	0	0	1.4E2	1.191	19612	5631	Sisma Y SLV	0	29	0	0	1.4E2	1.191
19613	5631	Sisma X SLD	28.6	0	0	0	1.4E2	1.191	19614	5631	Sisma Y SLD	0	28.6	0	0	1.4E2	1.191
19615	5632	Sisma X SLV	29	0	0	0	1.4E2	1.191	19616	5632	Sisma Y SLV	0	29	0	0	1.4E2	1.191
19617	5632	Sisma X SLD	28.6	0	0	0	1.4E2	1.191	19618	5632	Sisma Y SLD	0	28.6	0	0	1.4E2	1.191
19619	5633	Sisma X SLV	45.9	0	0	0	2.3E2	1.191	19620	5633	Sisma Y SLV	0	45.9	0	0	2.3E2	1.191
19621	5633	Sisma X SLD	45.1	0	0	0	2.3E2	1.191	19622	5633	Sisma Y SLD	0	45.1	0	0	2.3E2	1.191
19623	5634	Sisma X SLV	42.1	0	0	0	2.1E2	1.191	19624	5634	Sisma Y SLV	0	42.1	0	0	2.1E2	1.191
19625	5634	Sisma X SLD	41.4	0	0	0	2.1E2	1.191	19626	5634	Sisma Y SLD	0	41.4	0	0	2.1E2	1.191
19627	5635	Sisma X SLV	42.2	0	0	0	207.63	1.191	19628	5635	Sisma Y SLV	0	42.2	0	0	207.63	1.191
19629	5635	Sisma X SLD	41.5	0	0	0	207.63	1.191	19630	5635	Sisma Y SLD	0	41.5	0	0	207.63	1.191
19631	5636	Sisma X SLV	45.5	0	0	0	223.87	1.191	19632	5636	Sisma Y SLV	0	45.5	0	0	223.87	1.191
19633	5636	Sisma X SLD	44.8	0	0	0	223.87	1.191	19634	5636	Sisma Y SLD	0	44.8	0	0	223.87	1.191
19635	5637	Sisma X SLV	50.6	0	0	0	2.5E2	1.191	19636	5637	Sisma Y SLV	0	50.6	0	0	2.5E2	1.191
19637	5637	Sisma X SLD	49.8	0	0	0	2.5E2	1.191	19638	5637	Sisma Y SLD	0	49.8	0	0	2.5E2	1.191
19639	5638	Sisma X SLV	44.9	0	0	0	2.2E2	1.191	19640	5638	Sisma Y SLV	0	44.9	0	0	2.2E2	1.191
19641	5638	Sisma X SLD	44.2	0	0	0	2.2E2	1.191	19642	5638	Sisma Y SLD	0	44.2	0	0	2.2E2	1.191
19643	5639	Sisma X SLV	49.9	0	0	0	2.5E2	1.191	19644	5639	Sisma Y SLV	0	49.9	0	0	2.5E2	1.191
19645	5639	Sisma X SLD	49.1	0	0	0	2.5E2	1.191	19646	5639	Sisma Y SLD	0	49.1	0	0	2.5E2	1.191
19647	5640	Sisma X SLV	42.2	0	0	0	2.1E2	1.191	19648	5640	Sisma Y SLV	0	42.2	0	0	2.1E2	1.191
19649	5640	Sisma X SLD	41.5	0	0	0	2.1E2	1.191	19650	5640	Sisma Y SLD	0	41.5	0	0	2.1E2	1.191
19651	5641	Sisma X SLV	29	0	0	0	1.4E2	1.191	19652	5641	Sisma Y SLV	0	29	0	0	1.4E2	1.191
19653	5641	Sisma X SLD	28.6	0	0	0	1.4E2	1.191	19654	5641	Sisma Y SLD	0	28.6	0	0	1.4E2	1.191
19655	5642	Sisma X SLV	35.5	0	0	0	1.7E2	1.191	19656	5642	Sisma Y SLV	0	35.5	0	0	1.7E2	1.191
19657	5642	Sisma X SLD	34.9	0	0	0	1.7E2	1.191	19658	5642	Sisma Y SLD	0	34.9	0	0	1.7E2	1.191
19659	5643	Sisma X SLV	35.5	0	0	0	1.7E2	1.191	19660	5643	Sisma Y SLV	0	35.5	0	0	1.7E2	1.191
19661	5643	Sisma X SLD	34.9	0	0	0	1.7E2	1.191	19662	5643	Sisma Y SLD	0	34.9	0	0	1.7E2	1.191
19663	5644	Sisma X SLV	33.8	0	0	0	1.7E2	1.191	19664	5644	Sisma Y SLV	0	33.8	0	0	1.7E2	1.191
19665	5644	Sisma X SLD	33.3	0	0	0	1.7E2	1.191	19666	5644	Sisma Y SLD	0	33.3	0	0	1.7E2	1.191
19667	5645	Sisma X SLV	41.2	0	0	0	2.0E2	1.191	19668	5645	Sisma Y SLV	0	41.2	0	0	2.0E2	1.191
19669	5645	Sisma X SLD	40.6	0	0	0	2.0E2	1.191	19670	5645	Sisma Y SLD	0	40.6	0	0	2.0E2	1.191
19671	5646	Sisma X SLV	29	0	0	0	142.84	1.191	19672	5646	Sisma Y SLV	0	29	0	0	142.84	1.191
19673	5646	Sisma X SLD	28.6	0	0	0	142.84	1.191	19674	5646	Sisma Y SLD	0	28.6	0	0	142.84	1.191
19675	5647	Sisma X SLV	44.8	0	0	0	2.2E2	1.191	19676	5647	Sisma Y SLV	0	44.8	0	0	2.2E2	1.191
19677	5647	Sisma X SLD	44.1	0	0	0	2.2E2	1.191	19678	5647	Sisma Y SLD	0	44.1	0	0	2.2E2	1.191
19679	5648	Sisma X SLV	29.1	0	0	0	1.4E2	1.192	19680	5648	Sisma Y SLV	0	29.1	0	0	1.4E2	1.192
19681	5648	Sisma X SLD	28.6	0	0	0	1.4E2	1.192	19682	5648	Sisma Y SLD	0	28.6	0	0	1.4E2	1.192
19683	5649	Sisma X SLV	43.3	0	0	0	2.1E2	1.192	19684	5649	Sisma Y SLV	0	43.3	0	0	2.1E2	1.192
19685	5649	Sisma X SLD	42.6	0	0	0	2.1E2	1.192	19686	5649	Sisma Y SLD	0	42.6	0	0	2.1E2	1.192
19687	5650	Sisma X SLV	29.1	0	0	0	1.4E2	1.192	19688	5650	Sisma Y SLV	0	29.1	0	0	1.4E2	1.192
19689	5650	Sisma X SLD	28.6	0	0	0	1.4E2	1.192	19690	5650	Sisma Y SLD	0	28.6	0	0	1.4E2	1.192
19691	5651	Sisma X SLV	49.8	0	0	0	2.4E2	1.192	19692	5651	Sisma Y SLV	0	49.8	0	0	2.4E2	1.192
19693	5651	Sisma X SLD	49	0	0	0	2.4E2	1.192	19694	5651	Sisma Y SLD	0	49	0	0	2.4E2	1.192
19695	5652	Sisma X SLV	49.8	0	0	0	2.4E2	1.192	19696	5652	Sisma Y SLV	0	49.8	0	0	2.4E2	1.192
19697	5652	Sisma X SLD	49	0	0	0	2.4E2	1.192	19698	5652	Sisma Y SLD	0	49	0	0	2.4E2	1.192
19699	5653	Sisma X SLV	49.8	0	0	0	2.4E2	1.192	19700	5653	Sisma Y SLV	0	49.8	0	0	2.4E2	1.192
19701	5653	Sisma X SLD	49	0	0	0	2.4E2	1.192	19702	5653	Sisma Y SLD	0	49	0	0	2.4E2	1.192
19703	5654	Sisma X SLV	46.9	0	0	0	2.3E2	1.192	19704	5654	Sisma Y SLV	0	46.9	0	0	2.3E2	1.192
19705	5654	Sisma X SLD	46.1	0	0	0	2.3E2	1.192	19706	5654	Sisma Y SLD	0	46.1	0	0	2.3E2	1.192
19707	5655	Sisma X SLV	29.1	0	0	0	1.4E2	1.192	19708	5655	Sisma Y SLV	0	29.1	0	0	1.4E2	1.192
19709	5655	Sisma X SLD	28.6	0	0	0	1.4E2	1.192	19710	5655	Sisma Y SLD	0	28.6	0	0	1.4E2	1.192
19711	5656	Sisma X SLV	40	0	0	0	2.0E2	1.192	19712	5656	Sisma Y SLV	0	40	0	0	2.0E2	1.192
19713	5656	Sisma X SLD	39.3	0	0	0	2.0E2	1.192	19714	5656	Sisma Y SLD	0	39.3	0	0	2.0E2	1.192
19715	5657	Sisma X SLV	39.9	0	0	0	2.0E2	1.192	19716	5657	Sisma Y SLV	0	39.9	0	0	2.0E2	1.192
19717	5657	Sisma X SLD	39.2	0	0	0	2.0E2	1.192	19718	5657	Sisma Y SLD	0	39.2	0	0	2.0E2	1.192
19719	5658	Sisma X SLV	44.3	0	0	0	2.2E2	1.192	19720	5658	Sisma Y SLV	0	44.3	0	0	2.2E2	1.192
19721	5658	Sisma X SLD	43.6	0	0	0	2.2E2	1.192	19722	5658	Sisma Y SLD	0	43.6	0	0	2.2E2	1.192
19723	5659	Sisma X SLV	53.8	0	0	0	2.6E2	1.192	19724	5659	Sisma Y SLV	0	53.8	0	0	2.6E2	1.192
19725	5659	Sisma X SLD	52.9	0	0	0	2.6E2	1.192	19726	5659	Sisma Y SLD	0	52.9	0	0	2.6E2	1.192
19727	5660	Sisma X SLV	44.4	0	0	0	218.37	1.192	19728	5660	Sisma Y SLV	0	44.4	0	0	218.37	1.192
19729	5660	Sisma X SLD	43.7	0	0	0	218.37	1.192	19730	5660	Sisma Y SLD	0	43.7	0	0	218.37	1.192
19731	5661	Sisma X SLV	52.4	0	0	0	2.6E2	1.192	19732	5661	Sisma Y SLV	0	52.4	0	0	2.6E2	1.192
19733	5661	Sisma X SLD	51.5	0	0	0	2.6E2	1.192	19734	5661	Sisma Y SLD	0	51.5	0	0	2.6E2	1.192
19735	5662	Sisma X SLV	40.1	0	0	0	2.0E2	1.192	19736	5662	Sisma Y SLV	0	40.1	0	0	2.0E2	1.192
19737	5662	Sisma X SLD	39.5	0	0	0	2.0E2	1.192	19738	5662	Sisma Y SLD	0	39.5	0	0	2.0E2	1.192
19739	5663	Sisma X SLV	29.1	0	0	0	1.4E2	1.192	19740	5663	Sisma Y SLV	0	29.1	0	0	1.4E2	1.192
19741	5663	Sisma X SLD	28.7	0	0	0	1.4E2	1.192	19742	5663	Sisma Y SLD	0	28.7	0	0	1.4E2	1.192
19743	5664	Sisma X SLV	41.5	0	0	0	2.0E2	1.192	19744	5664	Sisma Y SLV	0	41.5	0	0	2.0E2	1.192
19745	5664	Sisma X SLD	40.9	0	0	0	2.0E2	1.192	19746	5664	Sisma Y SLD	0	40.9	0	0	2.0E2	1.192
19747	5665	Sisma X SLV	32.5	0	0	0	1.6E2	1.192	19748	5665	Sisma Y SLV	0	32.5	0	0	1.6E2	1.192
19749	5665	Sisma X SLD	32	0	0	0	1.6E2	1.192	19750	5665	Sisma Y SLD	0	32	0	0	1.6E2	1.192
19751	5666	Sisma X SLV	40.8	0	0	0	2.0E2	1.192	19752	5666	Sisma Y SLV	0	40.8	0	0	2.0E2	1.192
19753	5666	Sisma X SLD	40.1	0	0	0	2.0E2	1.192	19754	5666	Sisma Y SLD	0	40.1	0	0	2.0E2	1.192
19755	5667	Sisma X SLV	46.8	0	0	0	2.3E2	1.192	19756	5667	Sisma Y SLV	0	46.8	0	0	2.3E2	1.192
19757	5667	Sisma X SLD	46.1	0	0	0	2.3E2	1.192	19758	5667	Sisma Y SLD	0	46.1	0	0	2.3E2	1.192
19759	5668	Sisma X SLV	46.3	0	0	0	2.3E2	1.192	19760	5668	Sisma Y SLV	0	46.3	0	0	2.3E2	1.192
19761	5668	Sisma X SLD	45.6	0	0	0	2.3E2	1.192	19762	5668	Sisma Y SLD	0	45.6	0	0	2.3E2	1.192
19763	5669	Sisma X SLV	29.3	0	0	0	1.4E2	1.192	19764	5669	Sisma Y SLV	0	29.3	0	0	1.4E2	1.192
19765	5669	Sisma X SLD	28.8	0	0	0	1.4E2	1.192	19766	5669	Sisma Y SLD	0	28.8	0	0	1.4E2	1.192
19767	5670	Sisma X SLV	47.4	0	0	0	2.3E2	1.192	19768	5670	Sisma Y SLV	0	47.4	0	0	2.3E2	1.192
19769	5670	Sisma X SLD	46.7	0	0	0	2.3E2	1.192	19770	5670	Sisma Y SLD	0	46.7	0	0	2.3E2	1.192
19771	5671	Sisma X SLV	45.9	0	0	0	225.77	1.192	19772	5671	Sisma Y SLV	0	45.9	0	0	225.77	1.192
19773	5671	Sisma X SLD	45.2	0	0	0	225.77	1.192	19774	5671	Sisma Y SLD	0	45.2	0	0	225.77	1.192
19775	5672	Sisma X SLV	29.5	0	0	0	1.5E2	1.192	19776	5672	Sisma Y SLV	0	29.5	0	0	1.5E2	1.192

Indice	Nodo	Condizione	Fx	Fy	Fz	Mz	Peso	Gamma	Indice	Nodo	Condizione	Fx	Fy	Fz	Mz	Peso	Gamma
19777	5672	Sisma X SLD	29.1	0	0	0	1.5E2	1.192	19778	5672	Sisma Y SLD	0	29.1	0	0	1.5E2	1.192
19779	5673	Sisma X SLV	48.1	0	0	0	2.4E2	1.192	19780	5673	Sisma Y SLV	0	48.1	0	0	2.4E2	1.192
19781	5673	Sisma X SLD	47.4	0	0	0	2.4E2	1.192	19782	5673	Sisma Y SLD	0	47.4	0	0	2.4E2	1.192
19783	5674	Sisma X SLV	49.5	0	0	0	243.17	1.192	19784	5674	Sisma Y SLV	0	49.5	0	0	243.17	1.192
19785	5674	Sisma X SLD	48.7	0	0	0	243.17	1.192	19786	5674	Sisma Y SLD	0	48.7	0	0	243.17	1.192
19787	5675	Sisma X SLV	49.5	0	0	0	243.15	1.192	19788	5675	Sisma Y SLV	0	49.5	0	0	243.15	1.192
19789	5675	Sisma X SLD	48.7	0	0	0	243.15	1.192	19790	5675	Sisma Y SLD	0	48.7	0	0	243.15	1.192
19791	5676	Sisma X SLV	50.4	0	0	0	2.5E2	1.192	19792	5676	Sisma Y SLV	0	50.4	0	0	2.5E2	1.192
19793	5676	Sisma X SLD	49.6	0	0	0	2.5E2	1.192	19794	5676	Sisma Y SLD	0	49.6	0	0	2.5E2	1.192
19795	5677	Sisma X SLV	50.4	0	0	0	2.5E2	1.192	19796	5677	Sisma Y SLV	0	50.4	0	0	2.5E2	1.192
19797	5677	Sisma X SLD	49.6	0	0	0	2.5E2	1.192	19798	5677	Sisma Y SLD	0	49.6	0	0	2.5E2	1.192
19799	5678	Sisma X SLV	45.7	0	0	0	2.2E2	1.192	19800	5678	Sisma Y SLV	0	45.7	0	0	2.2E2	1.192
19801	5678	Sisma X SLD	45	0	0	0	2.2E2	1.192	19802	5678	Sisma Y SLD	0	45	0	0	2.2E2	1.192
19803	5679	Sisma X SLV	39.7	0	0	0	2.0E2	1.192	19804	5679	Sisma Y SLV	0	39.7	0	0	2.0E2	1.192
19805	5679	Sisma X SLD	39.1	0	0	0	2.0E2	1.192	19806	5679	Sisma Y SLD	0	39.1	0	0	2.0E2	1.192
19807	5680	Sisma X SLV	48.9	0	0	0	2.4E2	1.192	19808	5680	Sisma Y SLV	0	48.9	0	0	2.4E2	1.192
19809	5680	Sisma X SLD	48.2	0	0	0	2.4E2	1.192	19810	5680	Sisma Y SLD	0	48.2	0	0	2.4E2	1.192
19811	5681	Sisma X SLV	48.9	0	0	0	2.4E2	1.192	19812	5681	Sisma Y SLV	0	48.9	0	0	2.4E2	1.192
19813	5681	Sisma X SLD	48.2	0	0	0	2.4E2	1.192	19814	5681	Sisma Y SLD	0	48.2	0	0	2.4E2	1.192
19815	5682	Sisma X SLV	29.9	0	0	0	147.14	1.192	19816	5682	Sisma Y SLV	0	29.9	0	0	147.14	1.192
19817	5682	Sisma X SLD	29.5	0	0	0	147.14	1.192	19818	5682	Sisma Y SLD	0	29.5	0	0	147.14	1.192
19819	5683	Sisma X SLV	51.4	0	0	0	2.5E2	1.192	19820	5683	Sisma Y SLV	0	51.4	0	0	2.5E2	1.192
19821	5683	Sisma X SLD	50.6	0	0	0	2.5E2	1.192	19822	5683	Sisma Y SLD	0	50.6	0	0	2.5E2	1.192
19823	5684	Sisma X SLV	51.4	0	0	0	2.5E2	1.192	19824	5684	Sisma Y SLV	0	51.4	0	0	2.5E2	1.192
19825	5684	Sisma X SLD	50.6	0	0	0	2.5E2	1.192	19826	5684	Sisma Y SLD	0	50.6	0	0	2.5E2	1.192
19827	5685	Sisma X SLV	48.8	0	0	0	2.4E2	1.192	19828	5685	Sisma Y SLV	0	48.8	0	0	2.4E2	1.192
19829	5685	Sisma X SLD	48	0	0	0	2.4E2	1.192	19830	5685	Sisma Y SLD	0	48	0	0	2.4E2	1.192
19831	5686	Sisma X SLV	52.5	0	0	0	2.6E2	1.192	19832	5686	Sisma Y SLV	0	52.5	0	0	2.6E2	1.192
19833	5686	Sisma X SLD	51.7	0	0	0	2.6E2	1.192	19834	5686	Sisma Y SLD	0	51.7	0	0	2.6E2	1.192
19835	5687	Sisma X SLV	45.6	0	0	0	2.2E2	1.192	19836	5687	Sisma Y SLV	0	45.6	0	0	2.2E2	1.192
19837	5687	Sisma X SLD	44.9	0	0	0	2.2E2	1.192	19838	5687	Sisma Y SLD	0	44.9	0	0	2.2E2	1.192
19839	5688	Sisma X SLV	53.5	0	0	0	2.6E2	1.192	19840	5688	Sisma Y SLV	0	53.5	0	0	2.6E2	1.192
19841	5688	Sisma X SLD	52.7	0	0	0	2.6E2	1.192	19842	5688	Sisma Y SLD	0	52.7	0	0	2.6E2	1.192
19843	5689	Sisma X SLV	51.8	0	0	0	2.5E2	1.192	19844	5689	Sisma Y SLV	0	51.8	0	0	2.5E2	1.192
19845	5689	Sisma X SLD	50.9	0	0	0	2.5E2	1.192	19846	5689	Sisma Y SLD	0	50.9	0	0	2.5E2	1.192
19847	5690	Sisma X SLV	48.7	0	0	0	2.4E2	1.192	19848	5690	Sisma Y SLV	0	48.7	0	0	2.4E2	1.192
19849	5690	Sisma X SLD	47.9	0	0	0	2.4E2	1.192	19850	5690	Sisma Y SLD	0	47.9	0	0	2.4E2	1.192
19851	5691	Sisma X SLV	48.7	0	0	0	2.4E2	1.192	19852	5691	Sisma Y SLV	0	48.7	0	0	2.4E2	1.192
19853	5691	Sisma X SLD	48	0	0	0	2.4E2	1.192	19854	5691	Sisma Y SLD	0	48	0	0	2.4E2	1.192
19855	5692	Sisma X SLV	30.4	0	0	0	1.5E2	1.192	19856	5692	Sisma Y SLV	0	30.4	0	0	1.5E2	1.192
19857	5692	Sisma X SLD	29.9	0	0	0	1.5E2	1.192	19858	5692	Sisma Y SLD	0	29.9	0	0	1.5E2	1.192
19859	5693	Sisma X SLV	54.6	0	0	0	2.7E2	1.192	19860	5693	Sisma Y SLV	0	54.6	0	0	2.7E2	1.192
19861	5693	Sisma X SLD	53.8	0	0	0	2.7E2	1.192	19862	5693	Sisma Y SLD	0	53.8	0	0	2.7E2	1.192
19863	5694	Sisma X SLV	51.3	0	0	0	2.5E2	1.192	19864	5694	Sisma Y SLV	0	51.3	0	0	2.5E2	1.192
19865	5694	Sisma X SLD	50.5	0	0	0	2.5E2	1.192	19866	5694	Sisma Y SLD	0	50.5	0	0	2.5E2	1.192
19867	5695	Sisma X SLV	29.7	0	0	0	1.5E2	1.193	19868	5695	Sisma Y SLV	0	29.7	0	0	1.5E2	1.193
19869	5695	Sisma X SLD	29.2	0	0	0	1.5E2	1.193	19870	5695	Sisma Y SLD	0	29.2	0	0	1.5E2	1.193
19871	5696	Sisma X SLV	29.7	0	0	0	1.5E2	1.193	19872	5696	Sisma Y SLV	0	29.7	0	0	1.5E2	1.193
19873	5696	Sisma X SLD	29.2	0	0	0	1.5E2	1.193	19874	5696	Sisma Y SLD	0	29.2	0	0	1.5E2	1.193
19875	5697	Sisma X SLV	29.7	0	0	0	1.5E2	1.193	19876	5697	Sisma Y SLV	0	29.7	0	0	1.5E2	1.193
19877	5697	Sisma X SLD	29.2	0	0	0	1.5E2	1.193	19878	5697	Sisma Y SLD	0	29.2	0	0	1.5E2	1.193
19879	5698	Sisma X SLV	29.7	0	0	0	1.5E2	1.193	19880	5698	Sisma Y SLV	0	29.7	0	0	1.5E2	1.193
19881	5698	Sisma X SLD	29.2	0	0	0	1.5E2	1.193	19882	5698	Sisma Y SLD	0	29.2	0	0	1.5E2	1.193
19883	5699	Sisma X SLV	29.7	0	0	0	146.04	1.193	19884	5699	Sisma Y SLV	0	29.7	0	0	146.04	1.193
19885	5699	Sisma X SLD	29.2	0	0	0	146.04	1.193	19886	5699	Sisma Y SLD	0	29.2	0	0	146.04	1.193
19887	5700	Sisma X SLV	29.7	0	0	0	145.78	1.193	19888	5700	Sisma Y SLV	0	29.7	0	0	145.78	1.193
19889	5700	Sisma X SLD	29.2	0	0	0	145.78	1.193	19890	5700	Sisma Y SLD	0	29.2	0	0	145.78	1.193
19891	5701	Sisma X SLV	29.8	0	0	0	1.5E2	1.193	19892	5701	Sisma Y SLV	0	29.8	0	0	1.5E2	1.193
19893	5701	Sisma X SLD	29.4	0	0	0	1.5E2	1.193	19894	5701	Sisma Y SLD	0	29.4	0	0	1.5E2	1.193
19895	5702	Sisma X SLV	29.7	0	0	0	1.5E2	1.193	19896	5702	Sisma Y SLV	0	29.7	0	0	1.5E2	1.193
19897	5702	Sisma X SLD	29.2	0	0	0	1.5E2	1.193	19898	5702	Sisma Y SLD	0	29.2	0	0	1.5E2	1.193
19899	5703	Sisma X SLV	30.1	0	0	0	1.5E2	1.193	19900	5703	Sisma Y SLV	0	30.1	0	0	1.5E2	1.193
19901	5703	Sisma X SLD	29.6	0	0	0	1.5E2	1.193	19902	5703	Sisma Y SLD	0	29.6	0	0	1.5E2	1.193
19903	5704	Sisma X SLV	29.7	0	0	0	145.81	1.193	19904	5704	Sisma Y SLV	0	29.7	0	0	145.81	1.193
19905	5704	Sisma X SLD	29.2	0	0	0	145.81	1.193	19906	5704	Sisma Y SLD	0	29.2	0	0	145.81	1.193
19907	5705	Sisma X SLV	30.5	0	0	0	1.5E2	1.193	19908	5705	Sisma Y SLV	0	30.5	0	0	1.5E2	1.193
19909	5705	Sisma X SLD	30	0	0	0	1.5E2	1.193	19910	5705	Sisma Y SLD	0	30	0	0	1.5E2	1.193
19911	5706	Sisma X SLV	39.8	0	0	0	2.0E2	1.193	19912	5706	Sisma Y SLV	0	39.8	0	0	2.0E2	1.193
19913	5706	Sisma X SLD	39.2	0	0	0	2.0E2	1.193	19914	5706	Sisma Y SLD	0	39.2	0	0	2.0E2	1.193
19915	5707	Sisma X SLV	38.5	0	0	0	1.9E2	1.193	19916	5707	Sisma Y SLV	0	38.5	0	0	1.9E2	1.193
19917	5707	Sisma X SLD	37.9	0	0	0	1.9E2	1.193	19918	5707	Sisma Y SLD	0	37.9	0	0	1.9E2	1.193
19919	5708	Sisma X SLV	29.7	0	0	0	1.5E2	1.193	19920	5708	Sisma Y SLV	0	29.7	0	0	1.5E2	1.193
19921	5708	Sisma X SLD	29.2	0	0	0	1.5E2	1.193	19922	5708	Sisma Y SLD	0	29.2	0	0	1.5E2	1.193
19923	5709	Sisma X SLV	30.9	0	0	0	1.5E2	1.193	19924	5709	Sisma Y SLV	0	30.9	0	0	1.5E2	1.193
19925	5709	Sisma X SLD	30.4	0	0	0	1.5E2	1.193	19926	5709	Sisma Y SLD	0	30.4	0	0	1.5E2	1.193
19927	5710	Sisma X SLV	19.4	0	0	0	95.368	1.193	19928	5710	Sisma Y SLV	0	19.4	0	0	95.368	1.193
19929	5710	Sisma X SLD	19.1	0	0	0	95.368	1.193	19930	5710	Sisma Y SLD	0	19.1	0	0	95.368	1.193
19931	5711	Sisma X SLV	27.6	0	0	0	135.65	1.193	19932	5711	Sisma Y SLV	0	27.6	0	0	135.65	1.193
19933	5711	Sisma X SLD	27.2	0	0	0	135.65	1.193	19934	5711	Sisma Y SLD	0	27.2	0	0	135.65	1.193
19935	5712	Sisma X SLV	23.9	0	0	0	1.2E2	1.193	19936	5712	Sisma Y SLV	0	23.9	0	0	1.2E2	1.193
19937	5712	Sisma X SLD	23.5	0	0	0	1.2E2	1.193	19938	5712	Sisma Y SLD	0	23.5	0	0	1.2E2	1.193
19939	5713	Sisma X SLV	23.5	0	0	0	1.2E2	1.193	19940	5713	Sisma Y SLV	0	23.5	0	0	1.2E2	1.193
19941	5713	Sisma X SLD	23.1	0	0	0	1.2E2	1.193	19942	5713	Sisma Y SLD	0	23.1	0	0	1.2E2	1.193
19943	5714	Sisma X SLV	22.1	0	0	0	1.1E2	1.193	19944	5714	Sisma Y SLV	0	22.1	0	0	1.1E2	1.193
19945	5714	Sisma X SLD	21.7	0	0	0	1.1E2	1.193	19946	5714	Sisma Y SLD	0	21.7	0	0	1.1E2	1.193
19947	5715	Sisma X SLV	25	0	0	0	1.2E2	1.193	19948	5715	Sisma Y SLV	0	25	0	0	1.2E2	1.193
19949	5715	Sisma X SLD	24.6	0	0	0	1.2E2	1.193	19950	5715	Sisma Y SLD	0	24.6	0	0	1.2E2	1.193
19951	5716	Sisma X SLV	20.3	0	0	0	99.746	1.193	19952	5716	Sisma Y SLV	0	20.3	0	0	99.746	1.193
19953	5716	Sisma X SLD	20	0	0	0	99.746	1.193	19954	5716	Sisma Y SLD	0	20	0	0	99.746	1.193
19955	5717	Sisma X SLV	19.2	0	0	0	94.581	1.193	19956	5717	Sisma Y SLV	0	19.2	0	0	94.581	1.193
19957	5717	Sisma X SLD	18.9	0	0	0	94.581	1.193	19958	5717	Sisma Y SLD	0	18.9	0	0	94.581	1.193
19959	5718	Sisma X SLV	20.2	0	0	0	99.322	1.193	19960	5718	Sisma Y SLV	0	20.2	0	0	99.322	1.193
19961	5718	Sisma X SLD	19.9	0	0	0	99.322	1.193	19962	5718	Sisma Y SLD	0	19.9	0	0	99.322	1.193
19963	5719	Sisma X SLV	26.7	0	0	0	1.3E2	1.193	19964	5719	Sisma Y SLV	0	26.7	0	0	1.3E2	1.193
19965	5719	Sisma X SLD	26.3	0	0	0	1.3E2	1.193	19966	5719	Sisma Y SLD	0	26.3	0	0	1.3E2	1.193
19967	5720	Sisma X SLV	18.9	0	0	0	93.047	1.193	19968	5720	Sisma Y SLV	0	18.9	0	0	93.047	1.193
19969	5720	Sisma X SLD	18.6	0	0	0	93.047	1.193	19970	5720	Sisma Y SLD	0	18.6	0	0	93.047	1.193
19971	5721	Sisma X SLV	29.4	0	0	0	1.4E2	1.193	19972	5721	Sisma Y SLV	0	29.4	0	0	1.4E2	1.193
19973	5721	Sisma X SLD	28.9	0	0	0	1.4E2	1.193	19974	5721	Sisma Y SLD	0	28.9	0	0	1.4E2	1.193
19975	5722	Sisma X SLV	70.2	0	0	0	3.5E2	1.193	19976	5722	Sisma Y SLV	0	70.2	0	0	3.5E2	1.193
19977	5722	Sisma X SLD	69.1	0	0	0	3.5E2	1.193	19978	5722	Sisma Y SLD	0	69.1	0	0	3.5E2	1.193
19979	5723	Sisma X SLV	19.3	0	0	0	94.758	1.193	19980	5723	Sisma Y SLV	0	19.3	0	0	94.758	1.193
19981	5723	Sisma X SLD	19	0	0	0	94.758	1.193	19982	5723	Sisma Y SLD	0	19	0	0	94.758	1.193
19983	5724	Sisma X SLV	27.6	0	0	0	1.4E2	1.193	19984	5724	Sisma Y SLV	0	27.6	0	0	1.4E2	1.193

Indice	Nodo	Condizione	Fx	Fy	Fz	Mz	Peso	Gamma	Indice	Nodo	Condizione	Fx	Fy	Fz	Mz	Peso	Gamma
19985	5724	Sisma X SLD	27.1	0	0	0	1.4E2	1.193	19986	5724	Sisma Y SLD	0	27.1	0	0	1.4E2	1.193
19987	5725	Sisma X SLV	35.3	0	0	0	173.25	1.193	19988	5725	Sisma Y SLV	0	35.3	0	0	173.25	1.193
19989	5725	Sisma X SLD	34.7	0	0	0	173.25	1.193	19990	5725	Sisma Y SLD	0	34.7	0	0	173.25	1.193
19991	5726	Sisma X SLV	23.5	0	0	0	115.5	1.193	19992	5726	Sisma Y SLV	0	23.5	0	0	115.5	1.193
19993	5726	Sisma X SLD	23.1	0	0	0	115.5	1.193	19994	5726	Sisma Y SLD	0	23.1	0	0	115.5	1.193
19995	5727	Sisma X SLV	23.5	0	0	0	115.5	1.193	19996	5727	Sisma Y SLV	0	23.5	0	0	115.5	1.193
19997	5727	Sisma X SLD	23.1	0	0	0	115.5	1.193	19998	5727	Sisma Y SLD	0	23.1	0	0	115.5	1.193
19999	5728	Sisma X SLV	23.5	0	0	0	115.5	1.193	20000	5728	Sisma Y SLV	0	23.5	0	0	115.5	1.193
20001	5728	Sisma X SLD	23.1	0	0	0	115.5	1.193	20002	5728	Sisma Y SLD	0	23.1	0	0	115.5	1.193
20003	5729	Sisma X SLV	61.2	0	0	0	3.0E2	1.193	20004	5729	Sisma Y SLV	0	61.2	0	0	3.0E2	1.193
20005	5729	Sisma X SLD	60.3	0	0	0	3.0E2	1.193	20006	5729	Sisma Y SLD	0	60.3	0	0	3.0E2	1.193
20007	5730	Sisma X SLV	64.2	0	0	0	3.2E2	1.193	20008	5730	Sisma Y SLV	0	64.2	0	0	3.2E2	1.193
20009	5730	Sisma X SLD	63.2	0	0	0	3.2E2	1.193	20010	5730	Sisma Y SLD	0	63.2	0	0	3.2E2	1.193
20011	5731	Sisma X SLV	63.5	0	0	0	3.1E2	1.193	20012	5731	Sisma Y SLV	0	63.5	0	0	3.1E2	1.193
20013	5731	Sisma X SLD	62.4	0	0	0	3.1E2	1.193	20014	5731	Sisma Y SLD	0	62.4	0	0	3.1E2	1.193
20015	5732	Sisma X SLV	75.2	0	0	0	3.7E2	1.193	20016	5732	Sisma Y SLV	0	75.2	0	0	3.7E2	1.193
20017	5732	Sisma X SLD	74	0	0	0	3.7E2	1.193	20018	5732	Sisma Y SLD	0	74	0	0	3.7E2	1.193
20019	5733	Sisma X SLV	26	0	0	0	1.3E2	1.193	20020	5733	Sisma Y SLV	0	26	0	0	1.3E2	1.193
20021	5733	Sisma X SLD	25.5	0	0	0	1.3E2	1.193	20022	5733	Sisma Y SLD	0	25.5	0	0	1.3E2	1.193
20023	5734	Sisma X SLV	26	0	0	0	1.3E2	1.193	20024	5734	Sisma Y SLV	0	26	0	0	1.3E2	1.193
20025	5734	Sisma X SLD	25.6	0	0	0	1.3E2	1.193	20026	5734	Sisma Y SLD	0	25.6	0	0	1.3E2	1.193
20027	5735	Sisma X SLV	24.9	0	0	0	122.29	1.193	20028	5735	Sisma Y SLV	0	24.9	0	0	122.29	1.193
20029	5735	Sisma X SLD	24.5	0	0	0	122.29	1.193	20030	5735	Sisma Y SLD	0	24.5	0	0	122.29	1.193
20031	5736	Sisma X SLV	24.9	0	0	0	1.2E2	1.193	20032	5736	Sisma Y SLV	0	24.9	0	0	1.2E2	1.193
20033	5736	Sisma X SLD	24.5	0	0	0	1.2E2	1.193	20034	5736	Sisma Y SLD	0	24.5	0	0	1.2E2	1.193
20035	5737	Sisma X SLV	16	0	0	0	78.804	1.193	20036	5737	Sisma Y SLV	0	16	0	0	78.804	1.193
20037	5737	Sisma X SLD	15.8	0	0	0	78.804	1.193	20038	5737	Sisma Y SLD	0	15.8	0	0	78.804	1.193
20039	5738	Sisma X SLV	24.6	0	0	0	120.83	1.193	20040	5738	Sisma Y SLV	0	24.6	0	0	120.83	1.193
20041	5738	Sisma X SLD	24.2	0	0	0	120.83	1.193	20042	5738	Sisma Y SLD	0	24.2	0	0	120.83	1.193
20043	5739	Sisma X SLV	83.2	0	0	0	4.1E2	1.193	20044	5739	Sisma Y SLV	0	83.2	0	0	4.1E2	1.193
20045	5739	Sisma X SLD	81.9	0	0	0	4.1E2	1.193	20046	5739	Sisma Y SLD	0	81.9	0	0	4.1E2	1.193
20047	5740	Sisma X SLV	35.3	0	0	0	173.25	1.193	20048	5740	Sisma Y SLV	0	35.3	0	0	173.25	1.193
20049	5740	Sisma X SLD	34.7	0	0	0	173.25	1.193	20050	5740	Sisma Y SLD	0	34.7	0	0	173.25	1.193
20051	5741	Sisma X SLV	19.6	0	0	0	96.302	1.193	20052	5741	Sisma Y SLV	0	19.6	0	0	96.302	1.193
20053	5741	Sisma X SLD	19.3	0	0	0	96.302	1.193	20054	5741	Sisma Y SLD	0	19.3	0	0	96.302	1.193
20055	5742	Sisma X SLV	21.8	0	0	0	1.1E2	1.193	20056	5742	Sisma Y SLV	0	21.8	0	0	1.1E2	1.193
20057	5742	Sisma X SLD	21.5	0	0	0	1.1E2	1.193	20058	5742	Sisma Y SLD	0	21.5	0	0	1.1E2	1.193
20059	5743	Sisma X SLV	41	0	0	0	2.0E2	1.193	20060	5743	Sisma Y SLV	0	41	0	0	2.0E2	1.193
20061	5743	Sisma X SLD	40.4	0	0	0	2.0E2	1.193	20062	5743	Sisma Y SLD	0	40.4	0	0	2.0E2	1.193
20063	5744	Sisma X SLV	41	0	0	0	2.0E2	1.193	20064	5744	Sisma Y SLV	0	41	0	0	2.0E2	1.193
20065	5744	Sisma X SLD	40.4	0	0	0	2.0E2	1.193	20066	5744	Sisma Y SLD	0	40.4	0	0	2.0E2	1.193
20067	5745	Sisma X SLV	31.1	0	0	0	1.5E2	1.193	20068	5745	Sisma Y SLV	0	31.1	0	0	1.5E2	1.193
20069	5745	Sisma X SLD	30.6	0	0	0	1.5E2	1.193	20070	5745	Sisma Y SLD	0	30.6	0	0	1.5E2	1.193
20071	5746	Sisma X SLV	31.1	0	0	0	1.5E2	1.194	20072	5746	Sisma Y SLV	0	31.1	0	0	1.5E2	1.194
20073	5746	Sisma X SLD	30.6	0	0	0	1.5E2	1.194	20074	5746	Sisma Y SLD	0	30.6	0	0	1.5E2	1.194
20075	5747	Sisma X SLV	31.1	0	0	0	1.5E2	1.195	20076	5747	Sisma Y SLV	0	31.1	0	0	1.5E2	1.195
20077	5747	Sisma X SLD	30.6	0	0	0	1.5E2	1.195	20078	5747	Sisma Y SLD	0	30.6	0	0	1.5E2	1.195
20079	5748	Sisma X SLV	30.4	0	0	0	1.5E2	1.195	20080	5748	Sisma Y SLV	0	30.4	0	0	1.5E2	1.195
20081	5748	Sisma X SLD	29.9	0	0	0	1.5E2	1.195	20082	5748	Sisma Y SLD	0	29.9	0	0	1.5E2	1.195
20083	5749	Sisma X SLV	31.1	0	0	0	1.5E2	1.196	20084	5749	Sisma Y SLV	0	31.1	0	0	1.5E2	1.196
20085	5749	Sisma X SLD	30.6	0	0	0	1.5E2	1.196	20086	5749	Sisma Y SLD	0	30.6	0	0	1.5E2	1.196
20087	5750	Sisma X SLV	48.5	0	0	0	2.4E2	1.197	20088	5750	Sisma Y SLV	0	48.5	0	0	2.4E2	1.197
20089	5750	Sisma X SLD	47.7	0	0	0	2.4E2	1.197	20090	5750	Sisma Y SLD	0	47.7	0	0	2.4E2	1.197
20091	5751	Sisma X SLV	48.5	0	0	0	2.4E2	1.197	20092	5751	Sisma Y SLV	0	48.5	0	0	2.4E2	1.197
20093	5751	Sisma X SLD	47.7	0	0	0	2.4E2	1.197	20094	5751	Sisma Y SLD	0	47.7	0	0	2.4E2	1.197
20095	5752	Sisma X SLV	45.8	0	0	0	2.2E2	1.197	20096	5752	Sisma Y SLV	0	45.8	0	0	2.2E2	1.197
20097	5752	Sisma X SLD	45	0	0	0	2.2E2	1.197	20098	5752	Sisma Y SLD	0	45	0	0	2.2E2	1.197
20099	5753	Sisma X SLV	45.8	0	0	0	2.2E2	1.197	20100	5753	Sisma Y SLV	0	45.8	0	0	2.2E2	1.197
20101	5753	Sisma X SLD	45	0	0	0	2.2E2	1.197	20102	5753	Sisma Y SLD	0	45	0	0	2.2E2	1.197
20103	5754	Sisma X SLV	26.5	0	0	0	1.3E2	1.197	20104	5754	Sisma Y SLV	0	26.5	0	0	1.3E2	1.197
20105	5754	Sisma X SLD	26	0	0	0	1.3E2	1.197	20106	5754	Sisma Y SLD	0	26	0	0	1.3E2	1.197
20107	5755	Sisma X SLV	31.1	0	0	0	1.5E2	1.198	20108	5755	Sisma Y SLV	0	31.1	0	0	1.5E2	1.198
20109	5755	Sisma X SLD	30.6	0	0	0	1.5E2	1.198	20110	5755	Sisma Y SLD	0	30.6	0	0	1.5E2	1.198
20111	5756	Sisma X SLV	50.4	0	0	0	2.5E2	1.198	20112	5756	Sisma Y SLV	0	50.4	0	0	2.5E2	1.198
20113	5756	Sisma X SLD	49.6	0	0	0	2.5E2	1.198	20114	5756	Sisma Y SLD	0	49.6	0	0	2.5E2	1.198
20115	5757	Sisma X SLV	50.5	0	0	0	2.5E2	1.198	20116	5757	Sisma Y SLV	0	50.5	0	0	2.5E2	1.198
20117	5757	Sisma X SLD	49.7	0	0	0	2.5E2	1.198	20118	5757	Sisma Y SLD	0	49.7	0	0	2.5E2	1.198
20119	5758	Sisma X SLV	33	0	0	0	1.6E2	1.199	20120	5758	Sisma Y SLV	0	33	0	0	1.6E2	1.199
20121	5758	Sisma X SLD	32.5	0	0	0	1.6E2	1.199	20122	5758	Sisma Y SLD	0	32.5	0	0	1.6E2	1.199
20123	5759	Sisma X SLV	30.4	0	0	0	1.5E2	1.2	20124	5759	Sisma Y SLV	0	30.4	0	0	1.5E2	1.2
20125	5759	Sisma X SLD	30	0	0	0	1.5E2	1.2	20126	5759	Sisma Y SLD	0	30	0	0	1.5E2	1.2
20127	5760	Sisma X SLV	31	0	0	0	1.5E2	1.2	20128	5760	Sisma Y SLV	0	31	0	0	1.5E2	1.2
20129	5760	Sisma X SLD	30.5	0	0	0	1.5E2	1.2	20130	5760	Sisma Y SLD	0	30.5	0	0	1.5E2	1.2
20131	5761	Sisma X SLV	47.8	0	0	0	2.3E2	1.201	20132	5761	Sisma Y SLV	0	47.8	0	0	2.3E2	1.201
20133	5761	Sisma X SLD	47.1	0	0	0	2.3E2	1.201	20134	5761	Sisma Y SLD	0	47.1	0	0	2.3E2	1.201
20135	5762	Sisma X SLV	25.7	0	0	0	1.3E2	1.201	20136	5762	Sisma Y SLV	0	25.7	0	0	1.3E2	1.201
20137	5762	Sisma X SLD	25.2	0	0	0	1.3E2	1.201	20138	5762	Sisma Y SLD	0	25.2	0	0	1.3E2	1.201
20139	5763	Sisma X SLV	48.9	0	0	0	2.4E2	1.203	20140	5763	Sisma Y SLV	0	48.9	0	0	2.4E2	1.203
20141	5763	Sisma X SLD	48.1	0	0	0	2.4E2	1.203	20142	5763	Sisma Y SLD	0	48.1	0	0	2.4E2	1.203
20143	5764	Sisma X SLV	48.9	0	0	0	2.4E2	1.203	20144	5764	Sisma Y SLV	0	48.9	0	0	2.4E2	1.203
20145	5764	Sisma X SLD	48.1	0	0	0	2.4E2	1.203	20146	5764	Sisma Y SLD	0	48.1	0	0	2.4E2	1.203
20147	5765	Sisma X SLV	30.8	0	0	0	1.5E2	1.203	20148	5765	Sisma Y SLV	0	30.8	0	0	1.5E2	1.203
20149	5765	Sisma X SLD	30.3	0	0	0	1.5E2	1.203	20150	5765	Sisma Y SLD	0	30.3	0	0	1.5E2	1.203
20151	5766	Sisma X SLV	25.9	0	0	0	1.3E2	1.204	20152	5766	Sisma Y SLV	0	25.9	0	0	1.3E2	1.204
20153	5766	Sisma X SLD	25.4	0	0	0	1.3E2	1.204	20154	5766	Sisma Y SLD	0	25.4	0	0	1.3E2	1.204
20155	5767	Sisma X SLV	50.8	0	0	0	2.5E2	1.204	20156	5767	Sisma Y SLV	0	50.8	0	0	2.5E2	1.204
20157	5767	Sisma X SLD	50	0	0	0	2.5E2	1.204	20158	5767	Sisma Y SLD	0	50	0	0	2.5E2	1.204
20159	5768	Sisma X SLV	50.8	0	0	0	2.5E2	1.204	20160	5768	Sisma Y SLV	0	50.8	0	0	2.5E2	1.204
20161	5768	Sisma X SLD	50	0	0	0	2.5E2	1.204	20162	5768	Sisma Y SLD	0	50	0	0	2.5E2	1.204
20163	5769	Sisma X SLV	30.5	0	0	0	1.5E2	1.206	20164	5769	Sisma Y SLV	0	30.5	0	0	1.5E2	1.206
20165	5769	Sisma X SLD	30.1	0	0	0	1.5E2	1.206	20166	5769	Sisma Y SLD	0	30.1	0	0	1.5E2	1.206
20167	5770	Sisma X SLV	24.4	0	0	0	1.2E2	1.206	20168	5770	Sisma Y SLV	0	24.4	0	0	1.2E2	1.206
20169	5770	Sisma X SLD	24	0	0	0	1.2E2	1.206	20170	5770	Sisma Y SLD	0	24	0	0	1.2E2	1.206
20171	5771	Sisma X SLV	27	0	0	0	1.3E2	1.207	20172	5771	Sisma Y SLV	0	27	0	0	1.3E2	1.207
20173	5771	Sisma X SLD	26.6	0	0	0	1.3E2	1.207	20174	5771	Sisma Y SLD	0	26.6	0	0	1.3E2	1.207
20175	5772	Sisma X SLV	33.6	0	0	0	1.6E2	1.208	20176	5772	Sisma Y SLV	0	33.6	0	0	1.6E2	1.208
20177	5772	Sisma X SLD	33	0	0	0	1.6E2	1.208	20178	5772	Sisma Y SLD	0	33	0	0	1.6E2	1.208
20179	5773	Sisma X SLV	24.3	0	0	0	1.2E2	1.208	20180	5773	Sisma Y SLV	0	24.3	0	0	1.2E2	1.208
20181	5773	Sisma X SLD	23.9	0	0	0	1.2E2	1.208	20182	5773	Sisma Y SLD	0	23.9	0	0	1.2E2	1.208
20183	5774	Sisma X SLV	42.4	0	0	0	2.1E2	1.208	20184	5774	Sisma Y SLV	0	42.4	0	0	2.1E2	1.208
20185	5774	Sisma X SLD	41.7	0	0	0	2.1E2	1.208	20186	5774	Sisma Y SLD	0	41.7	0	0	2.1E2	1.208

Indice	Nodo	Condizione	Fx	Fy	Fz	Mz	Peso	Gamma	Indice	Nodo	Condizione	Fx	Fy	Fz	Mz	Peso	Gamma
20187	5775	Sisma X SLV	42.4	0	0	0	2.1E2	1.208	20188	5775	Sisma Y SLV	0	42.4	0	0	2.1E2	1.208
20189	5775	Sisma X SLD	41.7	0	0	0	2.1E2	1.208	20190	5775	Sisma Y SLD	0	41.7	0	0	2.1E2	1.208
20191	5776	Sisma X SLV	24.9	0	0	0	1.2E2	1.208	20192	5776	Sisma Y SLV	0	24.9	0	0	1.2E2	1.208
20193	5776	Sisma X SLD	24.5	0	0	0	1.2E2	1.208	20194	5776	Sisma Y SLD	0	24.5	0	0	1.2E2	1.208
20195	5777	Sisma X SLV	48	0	0	0	2.3E2	1.209	20196	5777	Sisma Y SLV	0	48	0	0	2.3E2	1.209
20197	5777	Sisma X SLD	47.2	0	0	0	2.3E2	1.209	20198	5777	Sisma Y SLD	0	47.2	0	0	2.3E2	1.209
20199	5778	Sisma X SLV	49.7	0	0	0	2.4E2	1.211	20200	5778	Sisma Y SLV	0	49.7	0	0	2.4E2	1.211
20201	5778	Sisma X SLD	48.9	0	0	0	2.4E2	1.211	20202	5778	Sisma Y SLD	0	48.9	0	0	2.4E2	1.211
20203	5779	Sisma X SLV	49.7	0	0	0	2.4E2	1.211	20204	5779	Sisma Y SLV	0	49.7	0	0	2.4E2	1.211
20205	5779	Sisma X SLD	48.9	0	0	0	2.4E2	1.211	20206	5779	Sisma Y SLD	0	48.9	0	0	2.4E2	1.211
20207	5780	Sisma X SLV	51.5	0	0	0	2.5E2	1.212	20208	5780	Sisma Y SLV	0	51.5	0	0	2.5E2	1.212
20209	5780	Sisma X SLD	50.6	0	0	0	2.5E2	1.212	20210	5780	Sisma Y SLD	0	50.6	0	0	2.5E2	1.212
20211	5781	Sisma X SLV	51.5	0	0	0	2.5E2	1.212	20212	5781	Sisma Y SLV	0	51.5	0	0	2.5E2	1.212
20213	5781	Sisma X SLD	50.7	0	0	0	2.5E2	1.212	20214	5781	Sisma Y SLD	0	50.7	0	0	2.5E2	1.212
20215	5782	Sisma X SLV	30.7	0	0	0	1.5E2	1.213	20216	5782	Sisma Y SLV	0	30.7	0	0	1.5E2	1.213
20217	5782	Sisma X SLD	30.2	0	0	0	1.5E2	1.213	20218	5782	Sisma Y SLD	0	30.2	0	0	1.5E2	1.213
20219	5783	Sisma X SLV	26.3	0	0	0	126.55	1.217	20220	5783	Sisma Y SLV	0	26.3	0	0	126.55	1.217
20221	5783	Sisma X SLD	25.9	0	0	0	126.55	1.217	20222	5783	Sisma Y SLD	0	25.9	0	0	126.55	1.217
20223	5784	Sisma X SLV	34.6	0	0	0	1.7E2	1.218	20224	5784	Sisma Y SLV	0	34.6	0	0	1.7E2	1.218
20225	5784	Sisma X SLD	34	0	0	0	1.7E2	1.218	20226	5784	Sisma Y SLD	0	34	0	0	1.7E2	1.218
20227	5785	Sisma X SLV	62.6	0	0	0	301.02	1.219	20228	5785	Sisma Y SLV	0	62.6	0	0	301.02	1.219
20229	5785	Sisma X SLD	61.6	0	0	0	301.02	1.219	20230	5785	Sisma Y SLD	0	61.6	0	0	301.02	1.219
20231	5786	Sisma X SLV	53.2	0	0	0	2.6E2	1.219	20232	5786	Sisma Y SLV	0	53.2	0	0	2.6E2	1.219
20233	5786	Sisma X SLD	52.3	0	0	0	2.6E2	1.219	20234	5786	Sisma Y SLD	0	52.3	0	0	2.6E2	1.219
20235	5787	Sisma X SLV	53.4	0	0	0	2.6E2	1.22	20236	5787	Sisma Y SLV	0	53.4	0	0	2.6E2	1.22
20237	5787	Sisma X SLD	52.5	0	0	0	2.6E2	1.22	20238	5787	Sisma Y SLD	0	52.5	0	0	2.6E2	1.22
20239	5788	Sisma X SLV	48.6	0	0	0	2.3E2	1.22	20240	5788	Sisma Y SLV	0	48.6	0	0	2.3E2	1.22
20241	5788	Sisma X SLD	47.8	0	0	0	2.3E2	1.22	20242	5788	Sisma Y SLD	0	47.8	0	0	2.3E2	1.22
20243	5789	Sisma X SLV	51	0	0	0	2.4E2	1.22	20244	5789	Sisma Y SLV	0	51	0	0	2.4E2	1.22
20245	5789	Sisma X SLD	50.2	0	0	0	2.4E2	1.22	20246	5789	Sisma Y SLD	0	50.2	0	0	2.4E2	1.22
20247	5790	Sisma X SLV	51	0	0	0	2.4E2	1.22	20248	5790	Sisma Y SLV	0	51	0	0	2.4E2	1.22
20249	5790	Sisma X SLD	50.2	0	0	0	2.4E2	1.22	20250	5790	Sisma Y SLD	0	50.2	0	0	2.4E2	1.22
20251	5791	Sisma X SLV	52.8	0	0	0	2.5E2	1.221	20252	5791	Sisma Y SLV	0	52.8	0	0	2.5E2	1.221
20253	5791	Sisma X SLD	52	0	0	0	2.5E2	1.221	20254	5791	Sisma Y SLD	0	52	0	0	2.5E2	1.221
20255	5792	Sisma X SLV	52.8	0	0	0	2.5E2	1.221	20256	5792	Sisma Y SLV	0	52.8	0	0	2.5E2	1.221
20257	5792	Sisma X SLD	52	0	0	0	2.5E2	1.221	20258	5792	Sisma Y SLD	0	52	0	0	2.5E2	1.221
20259	5793	Sisma X SLV	31.2	0	0	0	1.5E2	1.222	20260	5793	Sisma Y SLV	0	31.2	0	0	1.5E2	1.222
20261	5793	Sisma X SLD	30.7	0	0	0	1.5E2	1.222	20262	5793	Sisma Y SLD	0	30.7	0	0	1.5E2	1.222
20263	5794	Sisma X SLV	31.3	0	0	0	1.5E2	1.226	20264	5794	Sisma Y SLV	0	31.3	0	0	1.5E2	1.226
20265	5794	Sisma X SLD	30.8	0	0	0	1.5E2	1.226	20266	5794	Sisma Y SLD	0	30.8	0	0	1.5E2	1.226
20267	5795	Sisma X SLV	31.3	0	0	0	1.5E2	1.226	20268	5795	Sisma Y SLV	0	31.3	0	0	1.5E2	1.226
20269	5795	Sisma X SLD	30.8	0	0	0	1.5E2	1.226	20270	5795	Sisma Y SLD	0	30.8	0	0	1.5E2	1.226
20271	5796	Sisma X SLV	26.5	0	0	0	1.3E2	1.227	20272	5796	Sisma Y SLV	0	26.5	0	0	1.3E2	1.227
20273	5796	Sisma X SLD	26	0	0	0	1.3E2	1.227	20274	5796	Sisma Y SLD	0	26	0	0	1.3E2	1.227
20275	5797	Sisma X SLV	26.5	0	0	0	1.3E2	1.227	20276	5797	Sisma Y SLV	0	26.5	0	0	1.3E2	1.227
20277	5797	Sisma X SLD	26	0	0	0	1.3E2	1.227	20278	5797	Sisma Y SLD	0	26	0	0	1.3E2	1.227
20279	5798	Sisma X SLV	44.3	0	0	0	2.1E2	1.227	20280	5798	Sisma Y SLV	0	44.3	0	0	2.1E2	1.227
20281	5798	Sisma X SLD	43.6	0	0	0	2.1E2	1.227	20282	5798	Sisma Y SLD	0	43.6	0	0	2.1E2	1.227
20283	5799	Sisma X SLV	44.3	0	0	0	2.1E2	1.227	20284	5799	Sisma Y SLV	0	44.3	0	0	2.1E2	1.227
20285	5799	Sisma X SLD	43.6	0	0	0	2.1E2	1.227	20286	5799	Sisma Y SLD	0	43.6	0	0	2.1E2	1.227
20287	5800	Sisma X SLV	36.2	0	0	0	1.7E2	1.229	20288	5800	Sisma Y SLV	0	36.2	0	0	1.7E2	1.229
20289	5800	Sisma X SLD	35.7	0	0	0	1.7E2	1.229	20290	5800	Sisma Y SLD	0	35.7	0	0	1.7E2	1.229
20291	5801	Sisma X SLV	40.4	0	0	0	1.9E2	1.23	20292	5801	Sisma Y SLV	0	40.4	0	0	1.9E2	1.23
20293	5801	Sisma X SLD	39.8	0	0	0	1.9E2	1.23	20294	5801	Sisma Y SLD	0	39.8	0	0	1.9E2	1.23
20295	5802	Sisma X SLV	36.9	0	0	0	1.8E2	1.232	20296	5802	Sisma Y SLV	0	36.9	0	0	1.8E2	1.232
20297	5802	Sisma X SLD	36.3	0	0	0	1.8E2	1.232	20298	5802	Sisma Y SLD	0	36.3	0	0	1.8E2	1.232
20299	5803	Sisma X SLV	33.1	0	0	0	1.6E2	1.232	20300	5803	Sisma Y SLV	0	33.1	0	0	1.6E2	1.232
20301	5803	Sisma X SLD	32.5	0	0	0	1.6E2	1.232	20302	5803	Sisma Y SLD	0	32.5	0	0	1.6E2	1.232
20303	5804	Sisma X SLV	33.1	0	0	0	1.6E2	1.232	20304	5804	Sisma Y SLV	0	33.1	0	0	1.6E2	1.232
20305	5804	Sisma X SLD	32.5	0	0	0	1.6E2	1.232	20306	5804	Sisma Y SLD	0	32.5	0	0	1.6E2	1.232
20307	5805	Sisma X SLV	28.4	0	0	0	1.4E2	1.232	20308	5805	Sisma Y SLV	0	28.4	0	0	1.4E2	1.232
20309	5805	Sisma X SLD	28	0	0	0	1.4E2	1.232	20310	5805	Sisma Y SLD	0	28	0	0	1.4E2	1.232
20311	5806	Sisma X SLV	50.6	0	0	0	2.4E2	1.233	20312	5806	Sisma Y SLV	0	50.6	0	0	2.4E2	1.233
20313	5806	Sisma X SLD	49.8	0	0	0	2.4E2	1.233	20314	5806	Sisma Y SLD	0	49.8	0	0	2.4E2	1.233
20315	5807	Sisma X SLV	53.9	0	0	0	256.14	1.233	20316	5807	Sisma Y SLV	0	53.9	0	0	256.14	1.233
20317	5807	Sisma X SLD	53	0	0	0	256.14	1.233	20318	5807	Sisma Y SLD	0	53	0	0	256.14	1.233
20319	5808	Sisma X SLV	53.9	0	0	0	256.14	1.233	20320	5808	Sisma Y SLV	0	53.9	0	0	256.14	1.233
20321	5808	Sisma X SLD	53	0	0	0	256.14	1.233	20322	5808	Sisma Y SLD	0	53	0	0	256.14	1.233
20323	5809	Sisma X SLV	18.8	0	0	0	89.244	1.233	20324	5809	Sisma Y SLV	0	18.8	0	0	89.244	1.233
20325	5809	Sisma X SLD	18.5	0	0	0	89.244	1.233	20326	5809	Sisma Y SLD	0	18.5	0	0	89.244	1.233
20327	5810	Sisma X SLV	18.8	0	0	0	89.244	1.233	20328	5810	Sisma Y SLV	0	18.8	0	0	89.244	1.233
20329	5810	Sisma X SLD	18.5	0	0	0	89.244	1.233	20330	5810	Sisma Y SLD	0	18.5	0	0	89.244	1.233
20331	5811	Sisma X SLV	56.1	0	0	0	2.7E2	1.233	20332	5811	Sisma Y SLV	0	56.1	0	0	2.7E2	1.233
20333	5811	Sisma X SLD	55.2	0	0	0	2.7E2	1.233	20334	5811	Sisma Y SLD	0	55.2	0	0	2.7E2	1.233
20335	5812	Sisma X SLV	56.2	0	0	0	2.7E2	1.233	20336	5812	Sisma Y SLV	0	56.2	0	0	2.7E2	1.233
20337	5812	Sisma X SLD	55.3	0	0	0	2.7E2	1.233	20338	5812	Sisma Y SLD	0	55.3	0	0	2.7E2	1.233
20339	5813	Sisma X SLV	32.4	0	0	0	153.99	1.234	20340	5813	Sisma Y SLV	0	32.4	0	0	153.99	1.234
20341	5813	Sisma X SLD	31.9	0	0	0	153.99	1.234	20342	5813	Sisma Y SLD	0	31.9	0	0	153.99	1.234
20343	5814	Sisma X SLV	41.2	0	0	0	2.0E2	1.239	20344	5814	Sisma Y SLV	0	41.2	0	0	2.0E2	1.239
20345	5814	Sisma X SLD	40.6	0	0	0	2.0E2	1.239	20346	5814	Sisma Y SLD	0	40.6	0	0	2.0E2	1.239
20347	5815	Sisma X SLV	44	0	0	0	2.1E2	1.248	20348	5815	Sisma Y SLV	0	44	0	0	2.1E2	1.248
20349	5815	Sisma X SLD	43.3	0	0	0	2.1E2	1.248	20350	5815	Sisma Y SLD	0	43.3	0	0	2.1E2	1.248
20351	5816	Sisma X SLV	34.2	0	0	0	1.6E2	1.249	20352	5816	Sisma Y SLV	0	34.2	0	0	1.6E2	1.249
20353	5816	Sisma X SLD	33.7	0	0	0	1.6E2	1.249	20354	5816	Sisma Y SLD	0	33.7	0	0	1.6E2	1.249
20355	5817	Sisma X SLV	27	0	0	0	1.3E2	1.249	20356	5817	Sisma Y SLV	0	27	0	0	1.3E2	1.249
20357	5817	Sisma X SLD	26.6	0	0	0	1.3E2	1.249	20358	5817	Sisma Y SLD	0	26.6	0	0	1.3E2	1.249
20359	5818	Sisma X SLV	23.8	0	0	0	1.1E2	1.249	20360	5818	Sisma Y SLV	0	23.8	0	0	1.1E2	1.249
20361	5818	Sisma X SLD	23.4	0	0	0	1.1E2	1.249	20362	5818	Sisma Y SLD	0	23.4	0	0	1.1E2	1.249
20363	5819	Sisma X SLV	23.8	0	0	0	1.1E2	1.249	20364	5819	Sisma Y SLV	0	23.8	0	0	1.1E2	1.249
20365	5819	Sisma X SLD	23.4	0	0	0	1.1E2	1.249	20366	5819	Sisma Y SLD	0	23.4	0	0	1.1E2	1.249
20367	5820	Sisma X SLV	28.9	0	0	0	1.4E2	1.249	20368	5820	Sisma Y SLV	0	28.9	0	0	1.4E2	1.249
20369	5820	Sisma X SLD	28.4	0	0	0	1.4E2	1.249	20370	5820	Sisma Y SLD	0	28.4	0	0	1.4E2	1.249
20371	5821	Sisma X SLV	28.9	0	0	0	1.4E2	1.249	20372	5821	Sisma Y SLV	0	28.9	0	0	1.4E2	1.249
20373	5821	Sisma X SLD	28.4	0	0	0	1.4E2	1.249	20374	5821	Sisma Y SLD	0	28.4	0	0	1.4E2	1.249
20375	5822	Sisma X SLV	19.8	0	0	0	92.804	1.249	20376	5822	Sisma Y SLV	0	19.8	0	0	92.804	1.249
20377	5822	Sisma X SLD	19.5	0	0	0	92.804	1.249	20378	5822	Sisma Y SLD	0	19.5	0	0	92.804	1.249
20379	5823	Sisma X SLV	17.1	0	0	0	80.362	1.249	20380	5823	Sisma Y SLV	0	17.1	0	0	80.362	1.249
20381	5823	Sisma X SLD	16.9	0	0	0	80.362	1.249	20382	5823	Sisma Y SLD	0	16.9	0	0	80.362	1.249
20383	5824	Sisma X SLV	22.5	0	0	0	1.1E2	1.249	20384	5824	Sisma Y SLV	0	22.5	0	0	1.1E2	1.249
20385	5824	Sisma X SLD	22.2	0	0	0	1.1E2	1.249	20386	5824	Sisma Y SLD	0	22.2	0	0	1.1E2	1.249
20387	5825	Sisma X SLV	22.5	0	0	0	1.1E2	1.249	20388	5825	Sisma Y SLV	0	22.5	0	0	1.1E2	1.249
20389	5825	Sisma X SLD	22.2	0	0	0	1.1E2	1.249	20390	5825	Sisma Y SLD	0	22.2	0	0	1.1E2	1.249
20391	5826	Sisma X SLV	30	0	0	0	1.4E2	1.249	20392	5826	Sisma Y SLV	0	30	0	0	1.4E2	1.249
20393	5826	Sisma X SLD	29.6	0	0	0	1.4E2	1.249	20394	5826	Sisma Y SLD	0	29.6	0	0	1.4E2	1.249

Indice	Nodo	Condizione	Fx	Fy	Fz	Mz	Peso	Gamma	Indice	Nodo	Condizione	Fx	Fy	Fz	Mz	Peso	Gamma
20395	5827	Sisma X SLV	30	0	0	0	140.91	1.249	20396	5827	Sisma Y SLV	0	30	0	0	140.91	1.249
20397	5827	Sisma X SLD	29.6	0	0	0	140.91	1.249	20398	5827	Sisma Y SLD	0	29.6	0	0	140.91	1.249
20399	5828	Sisma X SLV	28.9	0	0	0	1.4E2	1.249	20400	5828	Sisma Y SLV	0	28.9	0	0	1.4E2	1.249
20401	5828	Sisma X SLD	28.4	0	0	0	1.4E2	1.249	20402	5828	Sisma Y SLD	0	28.4	0	0	1.4E2	1.249
20403	5829	Sisma X SLV	28.9	0	0	0	1.4E2	1.249	20404	5829	Sisma Y SLV	0	28.9	0	0	1.4E2	1.249
20405	5829	Sisma X SLD	28.4	0	0	0	1.4E2	1.249	20406	5829	Sisma Y SLD	0	28.4	0	0	1.4E2	1.249
20407	5830	Sisma X SLV	25	0	0	0	1.2E2	1.249	20408	5830	Sisma Y SLV	0	25	0	0	1.2E2	1.249
20409	5830	Sisma X SLD	24.6	0	0	0	1.2E2	1.249	20410	5830	Sisma Y SLD	0	24.6	0	0	1.2E2	1.249
20411	5831	Sisma X SLV	24	0	0	0	1.1E2	1.249	20412	5831	Sisma Y SLV	0	24	0	0	1.1E2	1.249
20413	5831	Sisma X SLD	23.6	0	0	0	1.1E2	1.249	20414	5831	Sisma Y SLD	0	23.6	0	0	1.1E2	1.249
20415	5832	Sisma X SLV	15.7	0	0	0	73.454	1.249	20416	5832	Sisma Y SLV	0	15.7	0	0	73.454	1.249
20417	5832	Sisma X SLD	15.4	0	0	0	73.454	1.249	20418	5832	Sisma Y SLD	0	15.4	0	0	73.454	1.249
20419	5833	Sisma X SLV	44	0	0	0	2.1E2	1.252	20420	5833	Sisma Y SLV	0	44	0	0	2.1E2	1.252
20421	5833	Sisma X SLD	43.3	0	0	0	2.1E2	1.252	20422	5833	Sisma Y SLD	0	43.3	0	0	2.1E2	1.252
20423	5834	Sisma X SLV	43.2	0	0	0	2.0E2	1.252	20424	5834	Sisma Y SLV	0	43.2	0	0	2.0E2	1.252
20425	5834	Sisma X SLD	42.5	0	0	0	2.0E2	1.252	20426	5834	Sisma Y SLD	0	42.5	0	0	2.0E2	1.252
20427	5835	Sisma X SLV	43.2	0	0	0	2.0E2	1.252	20428	5835	Sisma Y SLV	0	43.2	0	0	2.0E2	1.252
20429	5835	Sisma X SLD	42.5	0	0	0	2.0E2	1.252	20430	5835	Sisma Y SLD	0	42.5	0	0	2.0E2	1.252
20431	5836	Sisma X SLV	52.3	0	0	0	244.83	1.252	20432	5836	Sisma Y SLV	0	52.3	0	0	244.83	1.252
20433	5836	Sisma X SLD	51.5	0	0	0	244.83	1.252	20434	5836	Sisma Y SLD	0	51.5	0	0	244.83	1.252
20435	5837	Sisma X SLV	44.6	0	0	0	2.1E2	1.257	20436	5837	Sisma Y SLV	0	44.6	0	0	2.1E2	1.257
20437	5837	Sisma X SLD	43.9	0	0	0	2.1E2	1.257	20438	5837	Sisma Y SLD	0	43.9	0	0	2.1E2	1.257
20439	5838	Sisma X SLV	75.5	0	0	0	3.5E2	1.257	20440	5838	Sisma Y SLV	0	75.5	0	0	3.5E2	1.257
20441	5838	Sisma X SLD	74.3	0	0	0	3.5E2	1.257	20442	5838	Sisma Y SLD	0	74.3	0	0	3.5E2	1.257
20443	5839	Sisma X SLV	70.8	0	0	0	3.3E2	1.257	20444	5839	Sisma Y SLV	0	70.8	0	0	3.3E2	1.257
20445	5839	Sisma X SLD	69.7	0	0	0	3.3E2	1.257	20446	5839	Sisma Y SLD	0	69.7	0	0	3.3E2	1.257
20447	5840	Sisma X SLV	48.5	0	0	0	2.3E2	1.257	20448	5840	Sisma Y SLV	0	48.5	0	0	2.3E2	1.257
20449	5840	Sisma X SLD	47.8	0	0	0	2.3E2	1.257	20450	5840	Sisma Y SLD	0	47.8	0	0	2.3E2	1.257
20451	5841	Sisma X SLV	49	0	0	0	228.36	1.257	20452	5841	Sisma Y SLV	0	49	0	0	228.36	1.257
20453	5841	Sisma X SLD	48.2	0	0	0	228.36	1.257	20454	5841	Sisma Y SLD	0	48.2	0	0	228.36	1.257
20455	5842	Sisma X SLV	74.5	0	0	0	3.5E2	1.257	20456	5842	Sisma Y SLV	0	74.5	0	0	3.5E2	1.257
20457	5842	Sisma X SLD	73.3	0	0	0	3.5E2	1.257	20458	5842	Sisma Y SLD	0	73.3	0	0	3.5E2	1.257
20459	5843	Sisma X SLV	73.7	0	0	0	3.4E2	1.257	20460	5843	Sisma Y SLV	0	73.7	0	0	3.4E2	1.257
20461	5843	Sisma X SLD	72.5	0	0	0	3.4E2	1.257	20462	5843	Sisma Y SLD	0	72.5	0	0	3.4E2	1.257
20463	5844	Sisma X SLV	31.2	0	0	0	1.5E2	1.257	20464	5844	Sisma Y SLV	0	31.2	0	0	1.5E2	1.257
20465	5844	Sisma X SLD	30.7	0	0	0	1.5E2	1.257	20466	5844	Sisma Y SLD	0	30.7	0	0	1.5E2	1.257
20467	5845	Sisma X SLV	31.2	0	0	0	1.5E2	1.257	20468	5845	Sisma Y SLV	0	31.2	0	0	1.5E2	1.257
20469	5845	Sisma X SLD	30.7	0	0	0	1.5E2	1.257	20470	5845	Sisma Y SLD	0	30.7	0	0	1.5E2	1.257
20471	5846	Sisma X SLV	31.2	0	0	0	1.5E2	1.257	20472	5846	Sisma Y SLV	0	31.2	0	0	1.5E2	1.257
20473	5846	Sisma X SLD	30.7	0	0	0	1.5E2	1.257	20474	5846	Sisma Y SLD	0	30.7	0	0	1.5E2	1.257
20475	5847	Sisma X SLV	31.2	0	0	0	1.5E2	1.257	20476	5847	Sisma Y SLV	0	31.2	0	0	1.5E2	1.257
20477	5847	Sisma X SLD	30.7	0	0	0	1.5E2	1.257	20478	5847	Sisma Y SLD	0	30.7	0	0	1.5E2	1.257
20479	5848	Sisma X SLV	31.2	0	0	0	1.5E2	1.257	20480	5848	Sisma Y SLV	0	31.2	0	0	1.5E2	1.257
20481	5848	Sisma X SLD	30.7	0	0	0	1.5E2	1.257	20482	5848	Sisma Y SLD	0	30.7	0	0	1.5E2	1.257
20483	5849	Sisma X SLV	31.2	0	0	0	1.5E2	1.257	20484	5849	Sisma Y SLV	0	31.2	0	0	1.5E2	1.257
20485	5849	Sisma X SLD	30.7	0	0	0	1.5E2	1.257	20486	5849	Sisma Y SLD	0	30.7	0	0	1.5E2	1.257
20487	5850	Sisma X SLV	31.2	0	0	0	1.5E2	1.257	20488	5850	Sisma Y SLV	0	31.2	0	0	1.5E2	1.257
20489	5850	Sisma X SLD	30.7	0	0	0	1.5E2	1.257	20490	5850	Sisma Y SLD	0	30.7	0	0	1.5E2	1.257
20491	5851	Sisma X SLV	31.2	0	0	0	145.51	1.257	20492	5851	Sisma Y SLV	0	31.2	0	0	145.51	1.257
20493	5851	Sisma X SLD	30.7	0	0	0	145.51	1.257	20494	5851	Sisma Y SLD	0	30.7	0	0	145.51	1.257
20495	5852	Sisma X SLV	31.2	0	0	0	1.5E2	1.257	20496	5852	Sisma Y SLV	0	31.2	0	0	1.5E2	1.257
20497	5852	Sisma X SLD	30.7	0	0	0	1.5E2	1.257	20498	5852	Sisma Y SLD	0	30.7	0	0	1.5E2	1.257
20499	5853	Sisma X SLV	31.4	0	0	0	1.5E2	1.257	20500	5853	Sisma Y SLV	0	31.4	0	0	1.5E2	1.257
20501	5853	Sisma X SLD	30.9	0	0	0	1.5E2	1.257	20502	5853	Sisma Y SLD	0	30.9	0	0	1.5E2	1.257
20503	5854	Sisma X SLV	31.6	0	0	0	1.5E2	1.257	20504	5854	Sisma Y SLV	0	31.6	0	0	1.5E2	1.257
20505	5854	Sisma X SLD	31.1	0	0	0	1.5E2	1.257	20506	5854	Sisma Y SLD	0	31.1	0	0	1.5E2	1.257
20507	5855	Sisma X SLV	32	0	0	0	1.5E2	1.257	20508	5855	Sisma Y SLV	0	32	0	0	1.5E2	1.257
20509	5855	Sisma X SLD	31.5	0	0	0	1.5E2	1.257	20510	5855	Sisma Y SLD	0	31.5	0	0	1.5E2	1.257
20511	5856	Sisma X SLV	32.3	0	0	0	1.5E2	1.257	20512	5856	Sisma Y SLV	0	32.3	0	0	1.5E2	1.257
20513	5856	Sisma X SLD	31.8	0	0	0	1.5E2	1.257	20514	5856	Sisma Y SLD	0	31.8	0	0	1.5E2	1.257
20515	5857	Sisma X SLV	65.2	0	0	0	303.85	1.257	20516	5857	Sisma Y SLV	0	65.2	0	0	303.85	1.257
20517	5857	Sisma X SLD	64.1	0	0	0	303.85	1.257	20518	5857	Sisma Y SLD	0	64.1	0	0	303.85	1.257
20519	5858	Sisma X SLV	44.7	0	0	0	2.1E2	1.257	20520	5858	Sisma Y SLV	0	44.7	0	0	2.1E2	1.257
20521	5858	Sisma X SLD	44	0	0	0	2.1E2	1.257	20522	5858	Sisma Y SLD	0	44	0	0	2.1E2	1.257
20523	5859	Sisma X SLV	63.6	0	0	0	3.0E2	1.257	20524	5859	Sisma Y SLV	0	63.6	0	0	3.0E2	1.257
20525	5859	Sisma X SLD	62.6	0	0	0	3.0E2	1.257	20526	5859	Sisma Y SLD	0	62.6	0	0	3.0E2	1.257
20527	5860	Sisma X SLV	48.5	0	0	0	2.3E2	1.257	20528	5860	Sisma Y SLV	0	48.5	0	0	2.3E2	1.257
20529	5860	Sisma X SLD	47.8	0	0	0	2.3E2	1.257	20530	5860	Sisma Y SLD	0	47.8	0	0	2.3E2	1.257
20531	5861	Sisma X SLV	50.5	0	0	0	2.4E2	1.257	20532	5861	Sisma Y SLV	0	50.5	0	0	2.4E2	1.257
20533	5861	Sisma X SLD	49.7	0	0	0	2.4E2	1.257	20534	5861	Sisma Y SLD	0	49.7	0	0	2.4E2	1.257
20535	5862	Sisma X SLV	48.5	0	0	0	2.3E2	1.257	20536	5862	Sisma Y SLV	0	48.5	0	0	2.3E2	1.257
20537	5862	Sisma X SLD	47.8	0	0	0	2.3E2	1.257	20538	5862	Sisma Y SLD	0	47.8	0	0	2.3E2	1.257
20539	5863	Sisma X SLV	48.5	0	0	0	2.3E2	1.257	20540	5863	Sisma Y SLV	0	48.5	0	0	2.3E2	1.257
20541	5863	Sisma X SLD	47.7	0	0	0	2.3E2	1.257	20542	5863	Sisma Y SLD	0	47.7	0	0	2.3E2	1.257
20543	5864	Sisma X SLV	47.7	0	0	0	2.2E2	1.257	20544	5864	Sisma Y SLV	0	47.7	0	0	2.2E2	1.257
20545	5864	Sisma X SLD	47	0	0	0	2.2E2	1.257	20546	5864	Sisma Y SLD	0	47	0	0	2.2E2	1.257
20547	5865	Sisma X SLV	48.5	0	0	0	2.3E2	1.257	20548	5865	Sisma Y SLV	0	48.5	0	0	2.3E2	1.257
20549	5865	Sisma X SLD	47.7	0	0	0	2.3E2	1.257	20550	5865	Sisma Y SLD	0	47.7	0	0	2.3E2	1.257
20551	5866	Sisma X SLV	48.5	0	0	0	2.3E2	1.257	20552	5866	Sisma Y SLV	0	48.5	0	0	2.3E2	1.257
20553	5866	Sisma X SLD	47.7	0	0	0	2.3E2	1.257	20554	5866	Sisma Y SLD	0	47.7	0	0	2.3E2	1.257
20555	5867	Sisma X SLV	48.6	0	0	0	2.3E2	1.257	20556	5867	Sisma Y SLV	0	48.6	0	0	2.3E2	1.257
20557	5867	Sisma X SLD	47.9	0	0	0	2.3E2	1.257	20558	5867	Sisma Y SLD	0	47.9	0	0	2.3E2	1.257
20559	5868	Sisma X SLV	48	0	0	0	2.2E2	1.257	20560	5868	Sisma Y SLV	0	48	0	0	2.2E2	1.257
20561	5868	Sisma X SLD	47.2	0	0	0	2.2E2	1.257	20562	5868	Sisma Y SLD	0	47.2	0	0	2.2E2	1.257
20563	5869	Sisma X SLV	48.5	0	0	0	2.3E2	1.257	20564	5869	Sisma Y SLV	0	48.5	0	0	2.3E2	1.257
20565	5869	Sisma X SLD	47.7	0	0	0	2.3E2	1.257	20566	5869	Sisma Y SLD	0	47.7	0	0	2.3E2	1.257
20567	5870	Sisma X SLV	48.3	0	0	0	2.3E2	1.257	20568	5870	Sisma Y SLV	0	48.3	0	0	2.3E2	1.257
20569	5870	Sisma X SLD	47.5	0	0	0	2.3E2	1.257	20570	5870	Sisma Y SLD	0	47.5	0	0	2.3E2	1.257
20571	5871	Sisma X SLV	48.7	0	0	0	2.3E2	1.257	20572	5871	Sisma Y SLV	0	48.7	0	0	2.3E2	1.257
20573	5871	Sisma X SLD	48	0	0	0	2.3E2	1.257	20574	5871	Sisma Y SLD	0	48	0	0	2.3E2	1.257
20575	5872	Sisma X SLV	48.3	0	0	0	2.3E2	1.257	20576	5872	Sisma Y SLV	0	48.3	0	0	2.3E2	1.257
20577	5872	Sisma X SLD	47.5	0	0	0	2.3E2	1.257	20578	5872	Sisma Y SLD	0	47.5	0	0	2.3E2	1.257
20579	5873	Sisma X SLV	49.2	0	0	0	2.3E2	1.257	20580	5873	Sisma Y SLV	0	49.2	0	0	2.3E2	1.257
20581	5873	Sisma X SLD	48.4	0	0	0	2.3E2	1.257	20582	5873	Sisma Y SLD	0	48.4	0	0	2.3E2	1.257
20583	5874	Sisma X SLV	47.8	0	0	0	2.2E2	1.257	20584	5874	Sisma Y SLV	0	47.8	0	0	2.2E2	1.257
20585	5874	Sisma X SLD	47	0	0	0	2.2E2	1.257	20586	5874	Sisma Y SLD	0	47	0	0	2.2E2	1.257
20587	5875	Sisma X SLV	30.6	0	0	0	1.4E2	1.257	20588	5875	Sisma Y SLV	0	30.6	0	0	1.4E2	1.257
20589	5875	Sisma X SLD	30.1	0	0	0	1.4E2	1.257	20590	5875	Sisma Y SLD	0	30.1	0	0	1.4E2	1.257
20591	5876	Sisma X SLV	50.4	0	0	0	235.02	1.257	20592	5876	Sisma Y SLV	0	50.4	0	0	235.02	1.257
20593	5876	Sisma X SLD	49.6	0	0	0	235.02	1.257	20594	5876	Sisma Y SLD	0	49.6	0	0	235.02	1.257
20595	5877	Sisma X SLV	48	0	0	0	2.2E2	1.257	20596	5877	Sisma Y SLV	0	48	0	0	2.2E2	1.257

Indice	Nodo	Condizione	Fx	Fy	Fz	Mz	Peso	Gamma	Indice	Nodo	Condizione	Fx	Fy	Fz	Mz	Peso	Gamma
20597	5877	Sisma X SLD	47.2	0	0	0	2.2E2	1.257	20598	5877	Sisma Y SLD	0	47.2	0	0	2.2E2	1.257
20599	5878	Sisma X SLV	50.4	0	0	0	2.3E2	1.257	20600	5878	Sisma Y SLV	0	50.4	0	0	2.3E2	1.257
20601	5878	Sisma X SLD	49.6	0	0	0	2.3E2	1.257	20602	5878	Sisma Y SLD	0	49.6	0	0	2.3E2	1.257
20603	5879	Sisma X SLV	46.6	0	0	0	2.2E2	1.257	20604	5879	Sisma Y SLV	0	46.6	0	0	2.2E2	1.257
20605	5879	Sisma X SLD	45.8	0	0	0	2.2E2	1.257	20606	5879	Sisma Y SLD	0	45.8	0	0	2.2E2	1.257
20607	5880	Sisma X SLV	49.1	0	0	0	2.3E2	1.257	20608	5880	Sisma Y SLV	0	49.1	0	0	2.3E2	1.257
20609	5880	Sisma X SLD	48.4	0	0	0	2.3E2	1.257	20610	5880	Sisma Y SLD	0	48.4	0	0	2.3E2	1.257
20611	5881	Sisma X SLV	30.6	0	0	0	1.4E2	1.257	20612	5881	Sisma Y SLV	0	30.6	0	0	1.4E2	1.257
20613	5881	Sisma X SLD	30.2	0	0	0	1.4E2	1.257	20614	5881	Sisma Y SLD	0	30.2	0	0	1.4E2	1.257
20615	5882	Sisma X SLV	30.6	0	0	0	1.4E2	1.257	20616	5882	Sisma Y SLV	0	30.6	0	0	1.4E2	1.257
20617	5882	Sisma X SLD	30.2	0	0	0	1.4E2	1.257	20618	5882	Sisma Y SLD	0	30.2	0	0	1.4E2	1.257
20619	5883	Sisma X SLV	48.5	0	0	0	225.84	1.257	20620	5883	Sisma Y SLV	0	48.5	0	0	225.84	1.257
20621	5883	Sisma X SLD	47.7	0	0	0	225.84	1.257	20622	5883	Sisma Y SLD	0	47.7	0	0	225.84	1.257
20623	5884	Sisma X SLV	44.4	0	0	0	2.1E2	1.257	20624	5884	Sisma Y SLV	0	44.4	0	0	2.1E2	1.257
20625	5884	Sisma X SLD	43.7	0	0	0	2.1E2	1.257	20626	5884	Sisma Y SLD	0	43.7	0	0	2.1E2	1.257
20627	5885	Sisma X SLV	44.7	0	0	0	2.1E2	1.257	20628	5885	Sisma Y SLV	0	44.7	0	0	2.1E2	1.257
20629	5885	Sisma X SLD	44	0	0	0	2.1E2	1.257	20630	5885	Sisma Y SLD	0	44	0	0	2.1E2	1.257
20631	5886	Sisma X SLV	48	0	0	0	2.2E2	1.257	20632	5886	Sisma Y SLV	0	48	0	0	2.2E2	1.257
20633	5886	Sisma X SLD	47.2	0	0	0	2.2E2	1.257	20634	5886	Sisma Y SLD	0	47.2	0	0	2.2E2	1.257
20635	5887	Sisma X SLV	53.2	0	0	0	2.5E2	1.257	20636	5887	Sisma Y SLV	0	53.2	0	0	2.5E2	1.257
20637	5887	Sisma X SLD	52.4	0	0	0	2.5E2	1.257	20638	5887	Sisma Y SLD	0	52.4	0	0	2.5E2	1.257
20639	5888	Sisma X SLV	47.4	0	0	0	2.2E2	1.257	20640	5888	Sisma Y SLV	0	47.4	0	0	2.2E2	1.257
20641	5888	Sisma X SLD	46.6	0	0	0	2.2E2	1.257	20642	5888	Sisma Y SLD	0	46.6	0	0	2.2E2	1.257
20643	5889	Sisma X SLV	52.5	0	0	0	2.4E2	1.257	20644	5889	Sisma Y SLV	0	52.5	0	0	2.4E2	1.257
20645	5889	Sisma X SLD	51.6	0	0	0	2.4E2	1.257	20646	5889	Sisma Y SLD	0	51.6	0	0	2.4E2	1.257
20647	5890	Sisma X SLV	44.5	0	0	0	2.1E2	1.257	20648	5890	Sisma Y SLV	0	44.5	0	0	2.1E2	1.257
20649	5890	Sisma X SLD	43.8	0	0	0	2.1E2	1.257	20650	5890	Sisma Y SLD	0	43.8	0	0	2.1E2	1.257
20651	5891	Sisma X SLV	30.7	0	0	0	1.4E2	1.257	20652	5891	Sisma Y SLV	0	30.7	0	0	1.4E2	1.257
20653	5891	Sisma X SLD	30.2	0	0	0	1.4E2	1.257	20654	5891	Sisma Y SLD	0	30.2	0	0	1.4E2	1.257
20655	5892	Sisma X SLV	36	0	0	0	1.7E2	1.257	20656	5892	Sisma Y SLV	0	36	0	0	1.7E2	1.257
20657	5892	Sisma X SLD	35.5	0	0	0	1.7E2	1.257	20658	5892	Sisma Y SLD	0	35.5	0	0	1.7E2	1.257
20659	5893	Sisma X SLV	43.5	0	0	0	2.0E2	1.257	20660	5893	Sisma Y SLV	0	43.5	0	0	2.0E2	1.257
20661	5893	Sisma X SLD	42.9	0	0	0	2.0E2	1.257	20662	5893	Sisma Y SLD	0	42.9	0	0	2.0E2	1.257
20663	5894	Sisma X SLV	47.3	0	0	0	2.2E2	1.257	20664	5894	Sisma Y SLV	0	47.3	0	0	2.2E2	1.257
20665	5894	Sisma X SLD	46.6	0	0	0	2.2E2	1.257	20666	5894	Sisma Y SLD	0	46.6	0	0	2.2E2	1.257
20667	5895	Sisma X SLV	30.7	0	0	0	1.4E2	1.257	20668	5895	Sisma Y SLV	0	30.7	0	0	1.4E2	1.257
20669	5895	Sisma X SLD	30.2	0	0	0	1.4E2	1.257	20670	5895	Sisma Y SLD	0	30.2	0	0	1.4E2	1.257
20671	5896	Sisma X SLV	35.3	0	0	0	1.6E2	1.257	20672	5896	Sisma Y SLV	0	35.3	0	0	1.6E2	1.257
20673	5896	Sisma X SLD	34.8	0	0	0	1.6E2	1.257	20674	5896	Sisma Y SLD	0	34.8	0	0	1.6E2	1.257
20675	5897	Sisma X SLV	35.3	0	0	0	1.6E2	1.257	20676	5897	Sisma Y SLV	0	35.3	0	0	1.6E2	1.257
20677	5897	Sisma X SLD	34.8	0	0	0	1.6E2	1.257	20678	5897	Sisma Y SLD	0	34.8	0	0	1.6E2	1.257
20679	5898	Sisma X SLV	30.7	0	0	0	1.4E2	1.258	20680	5898	Sisma Y SLV	0	30.7	0	0	1.4E2	1.258
20681	5898	Sisma X SLD	30.2	0	0	0	1.4E2	1.258	20682	5898	Sisma Y SLD	0	30.2	0	0	1.4E2	1.258
20683	5899	Sisma X SLV	45.8	0	0	0	2.1E2	1.258	20684	5899	Sisma Y SLV	0	45.8	0	0	2.1E2	1.258
20685	5899	Sisma X SLD	45.1	0	0	0	2.1E2	1.258	20686	5899	Sisma Y SLD	0	45.1	0	0	2.1E2	1.258
20687	5900	Sisma X SLV	30.7	0	0	0	1.4E2	1.258	20688	5900	Sisma Y SLV	0	30.7	0	0	1.4E2	1.258
20689	5900	Sisma X SLD	30.2	0	0	0	1.4E2	1.258	20690	5900	Sisma Y SLD	0	30.2	0	0	1.4E2	1.258
20691	5901	Sisma X SLV	52.6	0	0	0	2.4E2	1.258	20692	5901	Sisma Y SLV	0	52.6	0	0	2.4E2	1.258
20693	5901	Sisma X SLD	51.7	0	0	0	2.4E2	1.258	20694	5901	Sisma Y SLD	0	51.7	0	0	2.4E2	1.258
20695	5902	Sisma X SLV	52.5	0	0	0	2.4E2	1.258	20696	5902	Sisma Y SLV	0	52.5	0	0	2.4E2	1.258
20697	5902	Sisma X SLD	51.7	0	0	0	2.4E2	1.258	20698	5902	Sisma Y SLD	0	51.7	0	0	2.4E2	1.258
20699	5903	Sisma X SLV	52.5	0	0	0	244.73	1.258	20700	5903	Sisma Y SLV	0	52.5	0	0	244.73	1.258
20701	5903	Sisma X SLD	51.7	0	0	0	244.73	1.258	20702	5903	Sisma Y SLD	0	51.7	0	0	244.73	1.258
20703	5904	Sisma X SLV	49.4	0	0	0	2.3E2	1.258	20704	5904	Sisma Y SLV	0	49.4	0	0	2.3E2	1.258
20705	5904	Sisma X SLD	48.6	0	0	0	2.3E2	1.258	20706	5904	Sisma Y SLD	0	48.6	0	0	2.3E2	1.258
20707	5905	Sisma X SLV	30.7	0	0	0	1.4E2	1.258	20708	5905	Sisma Y SLV	0	30.7	0	0	1.4E2	1.258
20709	5905	Sisma X SLD	30.2	0	0	0	1.4E2	1.258	20710	5905	Sisma Y SLD	0	30.2	0	0	1.4E2	1.258
20711	5906	Sisma X SLV	42.1	0	0	0	2.0E2	1.258	20712	5906	Sisma Y SLV	0	42.1	0	0	2.0E2	1.258
20713	5906	Sisma X SLD	41.4	0	0	0	2.0E2	1.258	20714	5906	Sisma Y SLD	0	41.4	0	0	2.0E2	1.258
20715	5907	Sisma X SLV	42	0	0	0	2.0E2	1.258	20716	5907	Sisma Y SLV	0	42	0	0	2.0E2	1.258
20717	5907	Sisma X SLD	41.4	0	0	0	2.0E2	1.258	20718	5907	Sisma Y SLD	0	41.4	0	0	2.0E2	1.258
20719	5908	Sisma X SLV	46.7	0	0	0	2.2E2	1.258	20720	5908	Sisma Y SLV	0	46.7	0	0	2.2E2	1.258
20721	5908	Sisma X SLD	46	0	0	0	2.2E2	1.258	20722	5908	Sisma Y SLD	0	46	0	0	2.2E2	1.258
20723	5909	Sisma X SLV	56.7	0	0	0	2.6E2	1.258	20724	5909	Sisma Y SLV	0	56.7	0	0	2.6E2	1.258
20725	5909	Sisma X SLD	55.8	0	0	0	2.6E2	1.258	20726	5909	Sisma Y SLD	0	55.8	0	0	2.6E2	1.258
20727	5910	Sisma X SLV	46.7	0	0	0	2.2E2	1.258	20728	5910	Sisma Y SLV	0	46.7	0	0	2.2E2	1.258
20729	5910	Sisma X SLD	45.9	0	0	0	2.2E2	1.258	20730	5910	Sisma Y SLD	0	45.9	0	0	2.2E2	1.258
20731	5911	Sisma X SLV	55.3	0	0	0	2.6E2	1.258	20732	5911	Sisma Y SLV	0	55.3	0	0	2.6E2	1.258
20733	5911	Sisma X SLD	54.5	0	0	0	2.6E2	1.258	20734	5911	Sisma Y SLD	0	54.5	0	0	2.6E2	1.258
20735	5912	Sisma X SLV	42.1	0	0	0	2.0E2	1.258	20736	5912	Sisma Y SLV	0	42.1	0	0	2.0E2	1.258
20737	5912	Sisma X SLD	41.4	0	0	0	2.0E2	1.258	20738	5912	Sisma Y SLD	0	41.4	0	0	2.0E2	1.258
20739	5913	Sisma X SLV	30.7	0	0	0	1.4E2	1.258	20740	5913	Sisma Y SLV	0	30.7	0	0	1.4E2	1.258
20741	5913	Sisma X SLD	30.3	0	0	0	1.4E2	1.258	20742	5913	Sisma Y SLD	0	30.3	0	0	1.4E2	1.258
20743	5914	Sisma X SLV	44	0	0	0	2.0E2	1.258	20744	5914	Sisma Y SLV	0	44	0	0	2.0E2	1.258
20745	5914	Sisma X SLD	43.3	0	0	0	2.0E2	1.258	20746	5914	Sisma Y SLD	0	43.3	0	0	2.0E2	1.258
20747	5915	Sisma X SLV	49.3	0	0	0	2.3E2	1.258	20748	5915	Sisma Y SLV	0	49.3	0	0	2.3E2	1.258
20749	5915	Sisma X SLD	48.5	0	0	0	2.3E2	1.258	20750	5915	Sisma Y SLD	0	48.5	0	0	2.3E2	1.258
20751	5916	Sisma X SLV	48.8	0	0	0	2.3E2	1.258	20752	5916	Sisma Y SLV	0	48.8	0	0	2.3E2	1.258
20753	5916	Sisma X SLD	48	0	0	0	2.3E2	1.258	20754	5916	Sisma Y SLD	0	48	0	0	2.3E2	1.258
20755	5917	Sisma X SLV	33.9	0	0	0	1.6E2	1.258	20756	5917	Sisma Y SLV	0	33.9	0	0	1.6E2	1.258
20757	5917	Sisma X SLD	33.4	0	0	0	1.6E2	1.258	20758	5917	Sisma Y SLD	0	33.4	0	0	1.6E2	1.258
20759	5918	Sisma X SLV	43	0	0	0	2.0E2	1.258	20760	5918	Sisma Y SLV	0	43	0	0	2.0E2	1.258
20761	5918	Sisma X SLD	42.3	0	0	0	2.0E2	1.258	20762	5918	Sisma Y SLD	0	42.3	0	0	2.0E2	1.258
20763	5919	Sisma X SLV	50	0	0	0	2.3E2	1.258	20764	5919	Sisma Y SLV	0	50	0	0	2.3E2	1.258
20765	5919	Sisma X SLD	49.2	0	0	0	2.3E2	1.258	20766	5919	Sisma Y SLD	0	49.2	0	0	2.3E2	1.258
20767	5920	Sisma X SLV	30.9	0	0	0	1.4E2	1.258	20768	5920	Sisma Y SLV	0	30.9	0	0	1.4E2	1.258
20769	5920	Sisma X SLD	30.4	0	0	0	1.4E2	1.258	20770	5920	Sisma Y SLD	0	30.4	0	0	1.4E2	1.258
20771	5921	Sisma X SLV	48.4	0	0	0	2.3E2	1.258	20772	5921	Sisma Y SLV	0	48.4	0	0	2.3E2	1.258
20773	5921	Sisma X SLD	47.7	0	0	0	2.3E2	1.258	20774	5921	Sisma Y SLD	0	47.7	0	0	2.3E2	1.258
20775	5922	Sisma X SLV	50.7	0	0	0	2.4E2	1.258	20776	5922	Sisma Y SLV	0	50.7	0	0	2.4E2	1.258
20777	5922	Sisma X SLD	49.9	0	0	0	2.4E2	1.258	20778	5922	Sisma Y SLD	0	49.9	0	0	2.4E2	1.258
20779	5923	Sisma X SLV	31.1	0	0	0	1.4E2	1.258	20780	5923	Sisma Y SLV	0	31.1	0	0	1.4E2	1.258
20781	5923	Sisma X SLD	30.6	0	0	0	1.4E2	1.258	20782	5923	Sisma Y SLD	0	30.6	0	0	1.4E2	1.258
20783	5924	Sisma X SLV	52.1	0	0	0	2.4E2	1.258	20784	5924	Sisma Y SLV	0	52.1	0	0	2.4E2	1.258
20785	5924	Sisma X SLD	51.3	0	0	0	2.4E2	1.258	20786	5924	Sisma Y SLD	0	51.3	0	0	2.4E2	1.258
20787	5925	Sisma X SLV	52.1	0	0	0	242.74	1.258	20788	5925	Sisma Y SLV	0	52.1	0	0	242.74	1.258
20789	5925	Sisma X SLD	51.3	0	0	0	242.74	1.258	20790	5925	Sisma Y SLD	0	51.3	0	0	242.74	1.258
20791	5926	Sisma X SLV	53	0	0	0	2.5E2	1.258	20792	5926	Sisma Y SLV	0	53	0	0	2.5E2	1.258
20793	5926	Sisma X SLD	52.2	0	0	0	2.5E2	1.258	20794	5926	Sisma Y SLD	0	52.2	0	0	2.5E2	1.258
20795	5927	Sisma X SLV	53	0	0	0	2.5E2	1.258	20796	5927	Sisma Y SLV	0	53	0	0	2.5E2	1.258
20797	5927	Sisma X SLD	52.2	0	0	0	2.5E2	1.258	20798	5927	Sisma Y SLD	0	52.2	0	0	2.5E2	1.258
20799	5928	Sisma X SLV	48.2	0	0	0	2.2E2	1.258	20800	5928	Sisma Y SLV	0	48.2	0	0	2.2E2	1.258
20801	5928	Sisma X SLD	47.4	0	0	0	2.2E2	1.258	20802	5928	Sisma Y SLD	0	47.4	0	0	2.2E2	1.258
20803	5929	Sisma X SLV	41.7	0	0	0	1.9E2	1.258	20804	5929	Sisma Y SLV	0	41.7	0	0	1.9E2	1.258

muratura

Indice	Nodo	Condizione	Fx	Fy	Fz	Mz	Peso	Gamma	Indice	Nodo	Condizione	Fx	Fy	Fz	Mz	Peso	Gamma
20805	5929	Sisma X SLD	41	0	0	0	1.9E2	1.258	20806	5929	Sisma Y SLD	0	41	0	0	1.9E2	1.258
20807	5930	Sisma X SLV	51.6	0	0	0	2.4E2	1.258	20808	5930	Sisma Y SLV	0	51.6	0	0	2.4E2	1.258
20809	5930	Sisma X SLD	50.8	0	0	0	2.4E2	1.258	20810	5930	Sisma Y SLD	0	50.8	0	0	2.4E2	1.258
20811	5931	Sisma X SLV	51.6	0	0	0	2.4E2	1.258	20812	5931	Sisma Y SLV	0	51.6	0	0	2.4E2	1.258
20813	5931	Sisma X SLD	50.8	0	0	0	2.4E2	1.258	20814	5931	Sisma Y SLD	0	50.8	0	0	2.4E2	1.258
20815	5932	Sisma X SLV	31.5	0	0	0	1.5E2	1.258	20816	5932	Sisma Y SLV	0	31.5	0	0	1.5E2	1.258
20817	5932	Sisma X SLD	31	0	0	0	1.5E2	1.258	20818	5932	Sisma Y SLD	0	31	0	0	1.5E2	1.258
20819	5933	Sisma X SLV	55.3	0	0	0	2.6E2	1.258	20820	5933	Sisma Y SLV	0	55.3	0	0	2.6E2	1.258
20821	5933	Sisma X SLD	54.4	0	0	0	2.6E2	1.258	20822	5933	Sisma Y SLD	0	54.4	0	0	2.6E2	1.258
20823	5934	Sisma X SLV	54.2	0	0	0	2.5E2	1.258	20824	5934	Sisma Y SLV	0	54.2	0	0	2.5E2	1.258
20825	5934	Sisma X SLD	53.3	0	0	0	2.5E2	1.258	20826	5934	Sisma Y SLD	0	53.3	0	0	2.5E2	1.258
20827	5935	Sisma X SLV	54.1	0	0	0	2.5E2	1.258	20828	5935	Sisma Y SLV	0	54.1	0	0	2.5E2	1.258
20829	5935	Sisma X SLD	53.3	0	0	0	2.5E2	1.258	20830	5935	Sisma Y SLD	0	53.3	0	0	2.5E2	1.258
20831	5936	Sisma X SLV	51.4	0	0	0	2.4E2	1.258	20832	5936	Sisma Y SLV	0	51.4	0	0	2.4E2	1.258
20833	5936	Sisma X SLD	50.6	0	0	0	2.4E2	1.258	20834	5936	Sisma Y SLD	0	50.6	0	0	2.4E2	1.258
20835	5937	Sisma X SLV	56.3	0	0	0	262.38	1.259	20836	5937	Sisma Y SLV	0	56.3	0	0	262.38	1.259
20837	5937	Sisma X SLD	55.5	0	0	0	262.38	1.259	20838	5937	Sisma Y SLD	0	55.5	0	0	262.38	1.259
20839	5938	Sisma X SLV	54.5	0	0	0	2.5E2	1.259	20840	5938	Sisma Y SLV	0	54.5	0	0	2.5E2	1.259
20841	5938	Sisma X SLD	53.6	0	0	0	2.5E2	1.259	20842	5938	Sisma Y SLD	0	53.6	0	0	2.5E2	1.259
20843	5939	Sisma X SLV	48.1	0	0	0	2.2E2	1.259	20844	5939	Sisma Y SLV	0	48.1	0	0	2.2E2	1.259
20845	5939	Sisma X SLD	47.4	0	0	0	2.2E2	1.259	20846	5939	Sisma Y SLD	0	47.4	0	0	2.2E2	1.259
20847	5940	Sisma X SLV	51.4	0	0	0	2.4E2	1.259	20848	5940	Sisma Y SLV	0	51.4	0	0	2.4E2	1.259
20849	5940	Sisma X SLD	50.6	0	0	0	2.4E2	1.259	20850	5940	Sisma Y SLD	0	50.6	0	0	2.4E2	1.259
20851	5941	Sisma X SLV	51.4	0	0	0	2.4E2	1.259	20852	5941	Sisma Y SLV	0	51.4	0	0	2.4E2	1.259
20853	5941	Sisma X SLD	50.6	0	0	0	2.4E2	1.259	20854	5941	Sisma Y SLD	0	50.6	0	0	2.4E2	1.259
20855	5942	Sisma X SLV	31.9	0	0	0	1.5E2	1.259	20856	5942	Sisma Y SLV	0	31.9	0	0	1.5E2	1.259
20857	5942	Sisma X SLD	31.4	0	0	0	1.5E2	1.259	20858	5942	Sisma Y SLD	0	31.4	0	0	1.5E2	1.259
20859	5943	Sisma X SLV	57.7	0	0	0	2.7E2	1.259	20860	5943	Sisma Y SLV	0	57.7	0	0	2.7E2	1.259
20861	5943	Sisma X SLD	56.8	0	0	0	2.7E2	1.259	20862	5943	Sisma Y SLD	0	56.8	0	0	2.7E2	1.259
20863	5944	Sisma X SLV	54.1	0	0	0	2.5E2	1.259	20864	5944	Sisma Y SLV	0	54.1	0	0	2.5E2	1.259
20865	5944	Sisma X SLD	53.2	0	0	0	2.5E2	1.259	20866	5944	Sisma Y SLD	0	53.2	0	0	2.5E2	1.259
20867	5945	Sisma X SLV	31.3	0	0	0	1.5E2	1.259	20868	5945	Sisma Y SLV	0	31.3	0	0	1.5E2	1.259
20869	5945	Sisma X SLD	30.8	0	0	0	1.5E2	1.259	20870	5945	Sisma Y SLD	0	30.8	0	0	1.5E2	1.259
20871	5946	Sisma X SLV	31.3	0	0	0	1.5E2	1.259	20872	5946	Sisma Y SLV	0	31.3	0	0	1.5E2	1.259
20873	5946	Sisma X SLD	30.8	0	0	0	1.5E2	1.259	20874	5946	Sisma Y SLD	0	30.8	0	0	1.5E2	1.259
20875	5947	Sisma X SLV	31.3	0	0	0	1.5E2	1.259	20876	5947	Sisma Y SLV	0	31.3	0	0	1.5E2	1.259
20877	5947	Sisma X SLD	30.8	0	0	0	1.5E2	1.259	20878	5947	Sisma Y SLD	0	30.8	0	0	1.5E2	1.259
20879	5948	Sisma X SLV	31.3	0	0	0	1.5E2	1.259	20880	5948	Sisma Y SLV	0	31.3	0	0	1.5E2	1.259
20881	5948	Sisma X SLD	30.8	0	0	0	1.5E2	1.259	20882	5948	Sisma Y SLD	0	30.8	0	0	1.5E2	1.259
20883	5949	Sisma X SLV	31.3	0	0	0	145.93	1.259	20884	5949	Sisma Y SLV	0	31.3	0	0	145.93	1.259
20885	5949	Sisma X SLD	30.8	0	0	0	145.93	1.259	20886	5949	Sisma Y SLD	0	30.8	0	0	145.93	1.259
20887	5950	Sisma X SLV	31.3	0	0	0	1.5E2	1.259	20888	5950	Sisma Y SLV	0	31.3	0	0	1.5E2	1.259
20889	5950	Sisma X SLD	30.8	0	0	0	1.5E2	1.259	20890	5950	Sisma Y SLD	0	30.8	0	0	1.5E2	1.259
20891	5951	Sisma X SLV	31.5	0	0	0	1.5E2	1.259	20892	5951	Sisma Y SLV	0	31.5	0	0	1.5E2	1.259
20893	5951	Sisma X SLD	31	0	0	0	1.5E2	1.259	20894	5951	Sisma Y SLD	0	31	0	0	1.5E2	1.259
20895	5952	Sisma X SLV	31.3	0	0	0	1.5E2	1.259	20896	5952	Sisma Y SLV	0	31.3	0	0	1.5E2	1.259
20897	5952	Sisma X SLD	30.8	0	0	0	1.5E2	1.259	20898	5952	Sisma Y SLD	0	30.8	0	0	1.5E2	1.259
20899	5953	Sisma X SLV	31.7	0	0	0	1.5E2	1.259	20900	5953	Sisma Y SLV	0	31.7	0	0	1.5E2	1.259
20901	5953	Sisma X SLD	31.2	0	0	0	1.5E2	1.259	20902	5953	Sisma Y SLD	0	31.2	0	0	1.5E2	1.259
20903	5954	Sisma X SLV	31.3	0	0	0	1.5E2	1.259	20904	5954	Sisma Y SLV	0	31.3	0	0	1.5E2	1.259
20905	5954	Sisma X SLD	30.8	0	0	0	1.5E2	1.259	20906	5954	Sisma Y SLD	0	30.8	0	0	1.5E2	1.259
20907	5955	Sisma X SLV	32.1	0	0	0	1.5E2	1.259	20908	5955	Sisma Y SLV	0	32.1	0	0	1.5E2	1.259
20909	5955	Sisma X SLD	31.6	0	0	0	1.5E2	1.259	20910	5955	Sisma Y SLD	0	31.6	0	0	1.5E2	1.259
20911	5956	Sisma X SLV	42.2	0	0	0	2.0E2	1.259	20912	5956	Sisma Y SLV	0	42.2	0	0	2.0E2	1.259
20913	5956	Sisma X SLD	41.6	0	0	0	2.0E2	1.259	20914	5956	Sisma Y SLD	0	41.6	0	0	2.0E2	1.259
20915	5957	Sisma X SLV	40.5	0	0	0	1.9E2	1.259	20916	5957	Sisma Y SLV	0	40.5	0	0	1.9E2	1.259
20917	5957	Sisma X SLD	39.8	0	0	0	1.9E2	1.259	20918	5957	Sisma Y SLD	0	39.8	0	0	1.9E2	1.259
20919	5958	Sisma X SLV	31.3	0	0	0	145.85	1.259	20920	5958	Sisma Y SLV	0	31.3	0	0	145.85	1.259
20921	5958	Sisma X SLD	30.8	0	0	0	145.85	1.259	20922	5958	Sisma Y SLD	0	30.8	0	0	145.85	1.259
20923	5959	Sisma X SLV	32.5	0	0	0	1.5E2	1.259	20924	5959	Sisma Y SLV	0	32.5	0	0	1.5E2	1.259
20925	5959	Sisma X SLD	32	0	0	0	1.5E2	1.259	20926	5959	Sisma Y SLD	0	32	0	0	1.5E2	1.259
20927	5960	Sisma X SLV	20.4	0	0	0	95.056	1.259	20928	5960	Sisma Y SLV	0	20.4	0	0	95.056	1.259
20929	5960	Sisma X SLD	20.1	0	0	0	95.056	1.259	20930	5960	Sisma Y SLD	0	20.1	0	0	95.056	1.259
20931	5961	Sisma X SLV	29.3	0	0	0	1.4E2	1.259	20932	5961	Sisma Y SLV	0	29.3	0	0	1.4E2	1.259
20933	5961	Sisma X SLD	28.8	0	0	0	1.4E2	1.259	20934	5961	Sisma Y SLD	0	28.8	0	0	1.4E2	1.259
20935	5962	Sisma X SLV	25.3	0	0	0	1.2E2	1.259	20936	5962	Sisma Y SLV	0	25.3	0	0	1.2E2	1.259
20937	5962	Sisma X SLD	24.9	0	0	0	1.2E2	1.259	20938	5962	Sisma Y SLD	0	24.9	0	0	1.2E2	1.259
20939	5963	Sisma X SLV	24.8	0	0	0	1.2E2	1.259	20940	5963	Sisma Y SLV	0	24.8	0	0	1.2E2	1.259
20941	5963	Sisma X SLD	24.4	0	0	0	1.2E2	1.259	20942	5963	Sisma Y SLD	0	24.4	0	0	1.2E2	1.259
20943	5964	Sisma X SLV	23.1	0	0	0	1.1E2	1.259	20944	5964	Sisma Y SLV	0	23.1	0	0	1.1E2	1.259
20945	5964	Sisma X SLD	22.8	0	0	0	1.1E2	1.259	20946	5964	Sisma Y SLD	0	22.8	0	0	1.1E2	1.259
20947	5965	Sisma X SLV	26.4	0	0	0	1.2E2	1.259	20948	5965	Sisma Y SLV	0	26.4	0	0	1.2E2	1.259
20949	5965	Sisma X SLD	26	0	0	0	1.2E2	1.259	20950	5965	Sisma Y SLD	0	26	0	0	1.2E2	1.259
20951	5966	Sisma X SLV	21.3	0	0	0	99.291	1.259	20952	5966	Sisma Y SLV	0	21.3	0	0	99.291	1.259
20953	5966	Sisma X SLD	21	0	0	0	99.291	1.259	20954	5966	Sisma Y SLD	0	21	0	0	99.291	1.259
20955	5967	Sisma X SLV	20.1	0	0	0	93.517	1.259	20956	5967	Sisma Y SLV	0	20.1	0	0	93.517	1.259
20957	5967	Sisma X SLD	19.8	0	0	0	93.517	1.259	20958	5967	Sisma Y SLD	0	19.8	0	0	93.517	1.259
20959	5968	Sisma X SLV	21.5	0	0	0	99.895	1.259	20960	5968	Sisma Y SLV	0	21.5	0	0	99.895	1.259
20961	5968	Sisma X SLD	21.1	0	0	0	99.895	1.259	20962	5968	Sisma Y SLD	0	21.1	0	0	99.895	1.259
20963	5969	Sisma X SLV	28.3	0	0	0	1.3E2	1.259	20964	5969	Sisma Y SLV	0	28.3	0	0	1.3E2	1.259
20965	5969	Sisma X SLD	27.8	0	0	0	1.3E2	1.259	20966	5969	Sisma Y SLD	0	27.8	0	0	1.3E2	1.259
20967	5970	Sisma X SLV	19.7	0	0	0	91.686	1.259	20968	5970	Sisma Y SLV	0	19.7	0	0	91.686	1.259
20969	5970	Sisma X SLD	19.4	0	0	0	91.686	1.259	20970	5970	Sisma Y SLD	0	19.4	0	0	91.686	1.259
20971	5971	Sisma X SLV	31	0	0	0	1.4E2	1.259	20972	5971	Sisma Y SLV	0	31	0	0	1.4E2	1.259
20973	5971	Sisma X SLD	30.5	0	0	0	1.4E2	1.259	20974	5971	Sisma Y SLD	0	30.5	0	0	1.4E2	1.259
20975	5972	Sisma X SLV	74	0	0	0	3.4E2	1.259	20976	5972	Sisma Y SLV	0	74	0	0	3.4E2	1.259
20977	5972	Sisma X SLD	72.9	0	0	0	3.4E2	1.259	20978	5972	Sisma Y SLD	0	72.9	0	0	3.4E2	1.259
20979	5973	Sisma X SLV	19.9	0	0	0	92.551	1.259	20980	5973	Sisma Y SLV	0	19.9	0	0	92.551	1.259
20981	5973	Sisma X SLD	19.6	0	0	0	92.551	1.259	20982	5973	Sisma Y SLD	0	19.6	0	0	92.551	1.259
20983	5974	Sisma X SLV	29.3	0	0	0	1.4E2	1.259	20984	5974	Sisma Y SLV	0	29.3	0	0	1.4E2	1.259
20985	5974	Sisma X SLD	28.8	0	0	0	1.4E2	1.259	20986	5974	Sisma Y SLD	0	28.8	0	0	1.4E2	1.259
20987	5975	Sisma X SLV	37.2	0	0	0	173.25	1.259	20988	5975	Sisma Y SLV	0	37.2	0	0	173.25	1.259
20989	5975	Sisma X SLD	36.6	0	0	0	173.25	1.259	20990	5975	Sisma Y SLD	0	36.6	0	0	173.25	1.259
20991	5976	Sisma X SLV	24.8	0	0	0	115.5	1.259	20992	5976	Sisma Y SLV	0	24.8	0	0	115.5	1.259
20993	5976	Sisma X SLD	24.4	0	0	0	115.5	1.259	20994	5976	Sisma Y SLD	0	24.4	0	0	115.5	1.259
20995	5977	Sisma X SLV	24.8	0	0	0	115.5	1.259	20996	5977	Sisma Y SLV	0	24.8	0	0	115.5	1.259
20997	5977	Sisma X SLD	24.4	0	0	0	115.5	1.259	20998	5977	Sisma Y SLD	0	24.4	0	0	115.5	1.259
20999	5978	Sisma X SLV	24.8	0	0	0	115.5	1.259	21000	5978	Sisma Y SLV	0	24.8	0	0	115.5	1.259
21001	5978	Sisma X SLD	24.4	0	0	0	115.5	1.259	21002	5978	Sisma Y SLD	0	24.4	0	0	115.5	1.259
21003	5979	Sisma X SLV	64.8	0	0	0	301.62	1.259	21004	5979	Sisma Y SLV	0	64.8	0	0	301.62	1.259
21005	5979	Sisma X SLD	63.8	0	0	0	301.62	1.259	21006	5979	Sisma Y SLD	0	63.8	0	0	301.62	1.259

Indice	Nodo	Condizione	Fx	Fy	Fz	Mz	Peso	Gamma	Indice	Nodo	Condizione	Fx	Fy	Fz	Mz	Peso	Gamma
21007	5980	Sisma X SLV	67.5	0	0	0	3.1E2	1.259	21008	5980	Sisma Y SLV	0	67.5	0	0	3.1E2	1.259
21009	5980	Sisma X SLD	66.4	0	0	0	3.1E2	1.259	21010	5980	Sisma Y SLD	0	66.4	0	0	3.1E2	1.259
21011	5981	Sisma X SLV	66.8	0	0	0	3.1E2	1.259	21012	5981	Sisma Y SLV	0	66.8	0	0	3.1E2	1.259
21013	5981	Sisma X SLD	65.8	0	0	0	3.1E2	1.259	21014	5981	Sisma Y SLD	0	65.8	0	0	3.1E2	1.259
21015	5982	Sisma X SLV	79.3	0	0	0	3.7E2	1.259	21016	5982	Sisma Y SLV	0	79.3	0	0	3.7E2	1.259
21017	5982	Sisma X SLD	78	0	0	0	3.7E2	1.259	21018	5982	Sisma Y SLD	0	78	0	0	3.7E2	1.259
21019	5983	Sisma X SLV	27.4	0	0	0	1.3E2	1.259	21020	5983	Sisma Y SLV	0	27.4	0	0	1.3E2	1.259
21021	5983	Sisma X SLD	27	0	0	0	1.3E2	1.259	21022	5983	Sisma Y SLD	0	27	0	0	1.3E2	1.259
21023	5984	Sisma X SLV	27.5	0	0	0	1.3E2	1.259	21024	5984	Sisma Y SLV	0	27.5	0	0	1.3E2	1.259
21025	5984	Sisma X SLD	27	0	0	0	1.3E2	1.259	21026	5984	Sisma Y SLD	0	27	0	0	1.3E2	1.259
21027	5985	Sisma X SLV	26.3	0	0	0	1.2E2	1.259	21028	5985	Sisma Y SLV	0	26.3	0	0	1.2E2	1.259
21029	5985	Sisma X SLD	25.9	0	0	0	1.2E2	1.259	21030	5985	Sisma Y SLD	0	25.9	0	0	1.2E2	1.259
21031	5986	Sisma X SLV	26.3	0	0	0	1.2E2	1.259	21032	5986	Sisma Y SLV	0	26.3	0	0	1.2E2	1.259
21033	5986	Sisma X SLD	25.9	0	0	0	1.2E2	1.259	21034	5986	Sisma Y SLD	0	25.9	0	0	1.2E2	1.259
21035	5987	Sisma X SLV	16.6	0	0	0	77.407	1.259	21036	5987	Sisma Y SLV	0	16.6	0	0	77.407	1.259
21037	5987	Sisma X SLD	16.4	0	0	0	77.407	1.259	21038	5987	Sisma Y SLD	0	16.4	0	0	77.407	1.259
21039	5988	Sisma X SLV	26	0	0	0	120.88	1.259	21040	5988	Sisma Y SLV	0	26	0	0	120.88	1.259
21041	5988	Sisma X SLD	25.6	0	0	0	120.88	1.259	21042	5988	Sisma Y SLD	0	25.6	0	0	120.88	1.259
21043	5989	Sisma X SLV	87.2	0	0	0	4.1E2	1.259	21044	5989	Sisma Y SLV	0	87.2	0	0	4.1E2	1.259
21045	5989	Sisma X SLD	85.8	0	0	0	4.1E2	1.259	21046	5989	Sisma Y SLD	0	85.8	0	0	4.1E2	1.259
21047	5990	Sisma X SLV	37.2	0	0	0	173.25	1.259	21048	5990	Sisma Y SLV	0	37.2	0	0	173.25	1.259
21049	5990	Sisma X SLD	36.6	0	0	0	173.25	1.259	21050	5990	Sisma Y SLD	0	36.6	0	0	173.25	1.259
21051	5991	Sisma X SLV	20.4	0	0	0	95.079	1.259	21052	5991	Sisma Y SLV	0	20.4	0	0	95.079	1.259
21053	5991	Sisma X SLD	20.1	0	0	0	95.079	1.259	21054	5991	Sisma Y SLD	0	20.1	0	0	95.079	1.259
21055	5992	Sisma X SLV	23	0	0	0	1.1E2	1.259	21056	5992	Sisma Y SLV	0	23	0	0	1.1E2	1.259
21057	5992	Sisma X SLD	22.7	0	0	0	1.1E2	1.259	21058	5992	Sisma Y SLD	0	22.7	0	0	1.1E2	1.259
21059	5993	Sisma X SLV	38.7	0	0	0	1.8E2	1.259	21060	5993	Sisma Y SLV	0	38.7	0	0	1.8E2	1.259
21061	5993	Sisma X SLD	38.1	0	0	0	1.8E2	1.259	21062	5993	Sisma Y SLD	0	38.1	0	0	1.8E2	1.259
21063	5994	Sisma X SLV	38.7	0	0	0	1.8E2	1.259	21064	5994	Sisma Y SLV	0	38.7	0	0	1.8E2	1.259
21065	5994	Sisma X SLD	38.1	0	0	0	1.8E2	1.259	21066	5994	Sisma Y SLD	0	38.1	0	0	1.8E2	1.259
21067	5995	Sisma X SLV	32.5	0	0	0	1.5E2	1.259	21068	5995	Sisma Y SLV	0	32.5	0	0	1.5E2	1.259
21069	5995	Sisma X SLD	32	0	0	0	1.5E2	1.259	21070	5995	Sisma Y SLD	0	32	0	0	1.5E2	1.259
21071	5996	Sisma X SLV	32.5	0	0	0	1.5E2	1.26	21072	5996	Sisma Y SLV	0	32.5	0	0	1.5E2	1.26
21073	5996	Sisma X SLD	32	0	0	0	1.5E2	1.26	21074	5996	Sisma Y SLD	0	32	0	0	1.5E2	1.26
21075	5997	Sisma X SLV	32.4	0	0	0	1.5E2	1.261	21076	5997	Sisma Y SLV	0	32.4	0	0	1.5E2	1.261
21077	5997	Sisma X SLD	31.9	0	0	0	1.5E2	1.261	21078	5997	Sisma Y SLD	0	31.9	0	0	1.5E2	1.261
21079	5998	Sisma X SLV	32	0	0	0	1.5E2	1.261	21080	5998	Sisma Y SLV	0	32	0	0	1.5E2	1.261
21081	5998	Sisma X SLD	31.5	0	0	0	1.5E2	1.261	21082	5998	Sisma Y SLD	0	31.5	0	0	1.5E2	1.261
21083	5999	Sisma X SLV	32.3	0	0	0	1.5E2	1.262	21084	5999	Sisma Y SLV	0	32.3	0	0	1.5E2	1.262
21085	5999	Sisma X SLD	31.8	0	0	0	1.5E2	1.262	21086	5999	Sisma Y SLD	0	31.8	0	0	1.5E2	1.262
21087	6000	Sisma X SLV	28.2	0	0	0	1.3E2	1.262	21088	6000	Sisma Y SLV	0	28.2	0	0	1.3E2	1.262
21089	6000	Sisma X SLD	27.8	0	0	0	1.3E2	1.262	21090	6000	Sisma Y SLD	0	27.8	0	0	1.3E2	1.262
21091	6001	Sisma X SLV	50.6	0	0	0	234.86	1.262	21092	6001	Sisma Y SLV	0	50.6	0	0	234.86	1.262
21093	6001	Sisma X SLD	49.8	0	0	0	234.86	1.262	21094	6001	Sisma Y SLD	0	49.8	0	0	234.86	1.262
21095	6002	Sisma X SLV	50.6	0	0	0	234.86	1.262	21096	6002	Sisma Y SLV	0	50.6	0	0	234.86	1.262
21097	6002	Sisma X SLD	49.8	0	0	0	234.86	1.262	21098	6002	Sisma Y SLD	0	49.8	0	0	234.86	1.262
21099	6003	Sisma X SLV	32.2	0	0	0	1.5E2	1.263	21100	6003	Sisma Y SLV	0	32.2	0	0	1.5E2	1.263
21101	6003	Sisma X SLD	31.6	0	0	0	1.5E2	1.263	21102	6003	Sisma Y SLD	0	31.6	0	0	1.5E2	1.263
21103	6004	Sisma X SLV	52.6	0	0	0	2.4E2	1.264	21104	6004	Sisma Y SLV	0	52.6	0	0	2.4E2	1.264
21105	6004	Sisma X SLD	51.8	0	0	0	2.4E2	1.264	21106	6004	Sisma Y SLD	0	51.8	0	0	2.4E2	1.264
21107	6005	Sisma X SLV	52.7	0	0	0	2.4E2	1.264	21108	6005	Sisma Y SLV	0	52.7	0	0	2.4E2	1.264
21109	6005	Sisma X SLD	51.8	0	0	0	2.4E2	1.264	21110	6005	Sisma Y SLD	0	51.8	0	0	2.4E2	1.264
21111	6006	Sisma X SLV	31.8	0	0	0	1.5E2	1.265	21112	6006	Sisma Y SLV	0	31.8	0	0	1.5E2	1.265
21113	6006	Sisma X SLD	31.3	0	0	0	1.5E2	1.265	21114	6006	Sisma Y SLD	0	31.3	0	0	1.5E2	1.265
21115	6007	Sisma X SLV	34.2	0	0	0	1.6E2	1.265	21116	6007	Sisma Y SLV	0	34.2	0	0	1.6E2	1.265
21117	6007	Sisma X SLD	33.7	0	0	0	1.6E2	1.265	21118	6007	Sisma Y SLD	0	33.7	0	0	1.6E2	1.265
21119	6008	Sisma X SLV	35.4	0	0	0	1.6E2	1.265	21120	6008	Sisma Y SLV	0	35.4	0	0	1.6E2	1.265
21121	6008	Sisma X SLD	34.8	0	0	0	1.6E2	1.265	21122	6008	Sisma Y SLD	0	34.8	0	0	1.6E2	1.265
21123	6009	Sisma X SLV	35.4	0	0	0	1.6E2	1.265	21124	6009	Sisma Y SLV	0	35.4	0	0	1.6E2	1.265
21125	6009	Sisma X SLD	34.8	0	0	0	1.6E2	1.265	21126	6009	Sisma Y SLD	0	34.8	0	0	1.6E2	1.265
21127	6010	Sisma X SLV	27.6	0	0	0	1.3E2	1.265	21128	6010	Sisma Y SLV	0	27.6	0	0	1.3E2	1.265
21129	6010	Sisma X SLD	27.2	0	0	0	1.3E2	1.265	21130	6010	Sisma Y SLD	0	27.2	0	0	1.3E2	1.265
21131	6011	Sisma X SLV	31.8	0	0	0	1.5E2	1.266	21132	6011	Sisma Y SLV	0	31.8	0	0	1.5E2	1.266
21133	6011	Sisma X SLD	31.3	0	0	0	1.5E2	1.266	21134	6011	Sisma Y SLD	0	31.3	0	0	1.5E2	1.266
21135	6012	Sisma X SLV	31	0	0	0	1.4E2	1.266	21136	6012	Sisma Y SLV	0	31	0	0	1.4E2	1.266
21137	6012	Sisma X SLD	30.5	0	0	0	1.4E2	1.266	21138	6012	Sisma Y SLD	0	30.5	0	0	1.4E2	1.266
21139	6013	Sisma X SLV	50.2	0	0	0	2.3E2	1.267	21140	6013	Sisma Y SLV	0	50.2	0	0	2.3E2	1.267
21141	6013	Sisma X SLD	49.4	0	0	0	2.3E2	1.267	21142	6013	Sisma Y SLD	0	49.4	0	0	2.3E2	1.267
21143	6014	Sisma X SLV	27.1	0	0	0	1.3E2	1.267	21144	6014	Sisma Y SLV	0	27.1	0	0	1.3E2	1.267
21145	6014	Sisma X SLD	26.7	0	0	0	1.3E2	1.267	21146	6014	Sisma Y SLD	0	26.7	0	0	1.3E2	1.267
21147	6015	Sisma X SLV	29.2	0	0	0	1.3E2	1.268	21148	6015	Sisma Y SLV	0	29.2	0	0	1.3E2	1.268
21149	6015	Sisma X SLD	28.7	0	0	0	1.3E2	1.268	21150	6015	Sisma Y SLD	0	28.7	0	0	1.3E2	1.268
21151	6016	Sisma X SLV	27.3	0	0	0	1.3E2	1.268	21152	6016	Sisma Y SLV	0	27.3	0	0	1.3E2	1.268
21153	6016	Sisma X SLD	26.9	0	0	0	1.3E2	1.268	21154	6016	Sisma Y SLD	0	26.9	0	0	1.3E2	1.268
21155	6017	Sisma X SLV	50.6	0	0	0	2.3E2	1.269	21156	6017	Sisma Y SLV	0	50.6	0	0	2.3E2	1.269
21157	6017	Sisma X SLD	49.8	0	0	0	2.3E2	1.269	21158	6017	Sisma Y SLD	0	49.8	0	0	2.3E2	1.269
21159	6018	Sisma X SLV	50.6	0	0	0	2.3E2	1.269	21160	6018	Sisma Y SLV	0	50.6	0	0	2.3E2	1.269
21161	6018	Sisma X SLD	49.8	0	0	0	2.3E2	1.269	21162	6018	Sisma Y SLD	0	49.8	0	0	2.3E2	1.269
21163	6019	Sisma X SLV	27.1	0	0	0	1.3E2	1.269	21164	6019	Sisma Y SLV	0	27.1	0	0	1.3E2	1.269
21165	6019	Sisma X SLD	26.7	0	0	0	1.3E2	1.269	21166	6019	Sisma Y SLD	0	26.7	0	0	1.3E2	1.269
21167	6020	Sisma X SLV	27.8	0	0	0	1.3E2	1.269	21168	6020	Sisma Y SLV	0	27.8	0	0	1.3E2	1.269
21169	6020	Sisma X SLD	27.4	0	0	0	1.3E2	1.269	21170	6020	Sisma Y SLD	0	27.4	0	0	1.3E2	1.269
21171	6021	Sisma X SLV	52.5	0	0	0	242.12	1.27	21172	6021	Sisma Y SLV	0	52.5	0	0	242.12	1.27
21173	6021	Sisma X SLD	51.6	0	0	0	242.12	1.27	21174	6021	Sisma Y SLD	0	51.6	0	0	242.12	1.27
21175	6022	Sisma X SLV	52.5	0	0	0	2.4E2	1.27	21176	6022	Sisma Y SLV	0	52.5	0	0	2.4E2	1.27
21177	6022	Sisma X SLD	51.7	0	0	0	2.4E2	1.27	21178	6022	Sisma Y SLD	0	51.7	0	0	2.4E2	1.27
21179	6023	Sisma X SLV	31.7	0	0	0	1.5E2	1.271	21180	6023	Sisma Y SLV	0	31.7	0	0	1.5E2	1.271
21181	6023	Sisma X SLD	31.2	0	0	0	1.5E2	1.271	21182	6023	Sisma Y SLD	0	31.2	0	0	1.5E2	1.271
21183	6024	Sisma X SLV	34.2	0	0	0	1.6E2	1.273	21184	6024	Sisma Y SLV	0	34.2	0	0	1.6E2	1.273
21185	6024	Sisma X SLD	33.6	0	0	0	1.6E2	1.273	21186	6024	Sisma Y SLD	0	33.6	0	0	1.6E2	1.273
21187	6025	Sisma X SLV	43.1	0	0	0	2.0E2	1.274	21188	6025	Sisma Y SLV	0	43.1	0	0	2.0E2	1.274
21189	6025	Sisma X SLD	42.4	0	0	0	2.0E2	1.274	21190	6025	Sisma Y SLD	0	42.4	0	0	2.0E2	1.274
21191	6026	Sisma X SLV	43.1	0	0	0	2.0E2	1.274	21192	6026	Sisma Y SLV	0	43.1	0	0	2.0E2	1.274
21193	6026	Sisma X SLD	42.4	0	0	0	2.0E2	1.274	21194	6026	Sisma Y SLD	0	42.4	0	0	2.0E2	1.274
21195	6027	Sisma X SLV	21.6	0	0	0	99.346	1.275	21196	6027	Sisma Y SLV	0	21.6	0	0	99.346	1.275
21197	6027	Sisma X SLD	21.3	0	0	0	99.346	1.275	21198	6027	Sisma Y SLD	0	21.3	0	0	99.346	1.275
21199	6028	Sisma X SLV	49.3	0	0	0	2.3E2	1.275	21200	6028	Sisma Y SLV	0	49.3	0	0	2.3E2	1.275
21201	6028	Sisma X SLD	48.6	0	0	0	2.3E2	1.275	21202	6028	Sisma Y SLD	0	48.6	0	0	2.3E2	1.275
21203	6029	Sisma X SLV	26.6	0	0	0	1.2E2	1.276	21204	6029	Sisma Y SLV	0	26.6	0	0	1.2E2	1.276
21205	6029	Sisma X SLD	26.2	0	0	0	1.2E2	1.276	21206	6029	Sisma Y SLD	0	26.2	0	0	1.2E2	1.276
21207	6030	Sisma X SLV	26.6	0	0	0	1.2E2	1.276	21208	6030	Sisma Y SLV	0	26.6	0	0	1.2E2	1.276
21209	6030	Sisma X SLD	26.2	0	0	0	1.2E2	1.276	21210	6030	Sisma Y SLD	0	26.2	0	0	1.2E2	1.276
21211	6031	Sisma X SLV	22.6	0	0	0	1.0E2	1.276	21212	6031	Sisma Y SLV	0	22.6	0	0	1.0E2	1.276
21213	6031	Sisma X SLD	22.2	0	0	0	1.0E2	1.276	21214	6031	Sisma Y SLD	0	22.2	0	0	1.0E2	1.276

muratura

Indice	Nodo	Condizione	Fx	Fy	Fz	Mz	Peso	Gamma	Indice	Nodo	Condizione	Fx	Fy	Fz	Mz	Peso	Gamma
21215	6032	Sisma X SLV	50.6	0	0	0	2.3E2	1.276	21216	6032	Sisma Y SLV	0	50.6	0	0	2.3E2	1.276
21217	6032	Sisma X SLD	49.8	0	0	0	2.3E2	1.276	21218	6032	Sisma Y SLD	0	49.8	0	0	2.3E2	1.276
21219	6033	Sisma X SLV	50.6	0	0	0	2.3E2	1.276	21220	6033	Sisma Y SLV	0	50.6	0	0	2.3E2	1.276
21221	6033	Sisma X SLD	49.8	0	0	0	2.3E2	1.276	21222	6033	Sisma Y SLD	0	49.8	0	0	2.3E2	1.276
21223	6034	Sisma X SLV	52.3	0	0	0	2.4E2	1.277	21224	6034	Sisma Y SLV	0	52.3	0	0	2.4E2	1.277
21225	6034	Sisma X SLD	51.5	0	0	0	2.4E2	1.277	21226	6034	Sisma Y SLD	0	51.5	0	0	2.4E2	1.277
21227	6035	Sisma X SLV	52.3	0	0	0	2.4E2	1.277	21228	6035	Sisma Y SLV	0	52.3	0	0	2.4E2	1.277
21229	6035	Sisma X SLD	51.5	0	0	0	2.4E2	1.277	21230	6035	Sisma Y SLD	0	51.5	0	0	2.4E2	1.277
21231	6036	Sisma X SLV	27.9	0	0	0	1.3E2	1.278	21232	6036	Sisma Y SLV	0	27.9	0	0	1.3E2	1.278
21233	6036	Sisma X SLD	27.4	0	0	0	1.3E2	1.278	21234	6036	Sisma Y SLD	0	27.4	0	0	1.3E2	1.278
21235	6037	Sisma X SLV	27.9	0	0	0	1.3E2	1.278	21236	6037	Sisma Y SLV	0	27.9	0	0	1.3E2	1.278
21237	6037	Sisma X SLD	27.4	0	0	0	1.3E2	1.278	21238	6037	Sisma Y SLD	0	27.4	0	0	1.3E2	1.278
21239	6038	Sisma X SLV	27.5	0	0	0	1.3E2	1.278	21240	6038	Sisma Y SLV	0	27.5	0	0	1.3E2	1.278
21241	6038	Sisma X SLD	27	0	0	0	1.3E2	1.278	21242	6038	Sisma Y SLD	0	27	0	0	1.3E2	1.278
21243	6039	Sisma X SLV	27.5	0	0	0	1.3E2	1.278	21244	6039	Sisma Y SLV	0	27.5	0	0	1.3E2	1.278
21245	6039	Sisma X SLD	27	0	0	0	1.3E2	1.278	21246	6039	Sisma Y SLD	0	27	0	0	1.3E2	1.278
21247	6040	Sisma X SLV	31.4	0	0	0	144.16	1.278	21248	6040	Sisma Y SLV	0	31.4	0	0	144.16	1.278
21249	6040	Sisma X SLD	30.9	0	0	0	144.16	1.278	21250	6040	Sisma Y SLD	0	30.9	0	0	144.16	1.278
21251	6041	Sisma X SLV	15.8	0	0	0	72.131	1.28	21252	6041	Sisma Y SLV	0	15.8	0	0	72.131	1.28
21253	6041	Sisma X SLD	15.5	0	0	0	72.131	1.28	21254	6041	Sisma Y SLD	0	15.5	0	0	72.131	1.28
21255	6042	Sisma X SLV	18	0	0	0	82.52	1.281	21256	6042	Sisma Y SLV	0	18	0	0	82.52	1.281
21257	6042	Sisma X SLD	17.8	0	0	0	82.52	1.281	21258	6042	Sisma Y SLD	0	17.8	0	0	82.52	1.281
21259	6043	Sisma X SLV	27.4	0	0	0	1.3E2	1.282	21260	6043	Sisma Y SLV	0	27.4	0	0	1.3E2	1.282
21261	6043	Sisma X SLD	26.9	0	0	0	1.3E2	1.282	21262	6043	Sisma Y SLD	0	26.9	0	0	1.3E2	1.282
21263	6044	Sisma X SLV	17.9	0	0	0	81.756	1.282	21264	6044	Sisma Y SLV	0	17.9	0	0	81.756	1.282
21265	6044	Sisma X SLD	17.6	0	0	0	81.756	1.282	21266	6044	Sisma Y SLD	0	17.6	0	0	81.756	1.282
21267	6045	Sisma X SLV	24.8	0	0	0	113.36	1.282	21268	6045	Sisma Y SLV	0	24.8	0	0	113.36	1.282
21269	6045	Sisma X SLD	24.4	0	0	0	113.36	1.282	21270	6045	Sisma Y SLD	0	24.4	0	0	113.36	1.282
21271	6046	Sisma X SLV	24.8	0	0	0	113.36	1.282	21272	6046	Sisma Y SLV	0	24.8	0	0	113.36	1.282
21273	6046	Sisma X SLD	24.4	0	0	0	113.36	1.282	21274	6046	Sisma Y SLD	0	24.4	0	0	113.36	1.282
21275	6047	Sisma X SLV	15.2	0	0	0	69.235	1.284	21276	6047	Sisma Y SLV	0	15.2	0	0	69.235	1.284
21277	6047	Sisma X SLD	14.9	0	0	0	69.235	1.284	21278	6047	Sisma Y SLD	0	14.9	0	0	69.235	1.284
21279	6048	Sisma X SLV	34.1	0	0	0	1.6E2	1.284	21280	6048	Sisma Y SLV	0	34.1	0	0	1.6E2	1.284
21281	6048	Sisma X SLD	33.5	0	0	0	1.6E2	1.284	21282	6048	Sisma Y SLD	0	33.5	0	0	1.6E2	1.284
21283	6049	Sisma X SLV	14.5	0	0	0	66.072	1.284	21284	6049	Sisma Y SLV	0	14.5	0	0	66.072	1.284
21285	6049	Sisma X SLD	14.2	0	0	0	66.072	1.284	21286	6049	Sisma Y SLD	0	14.2	0	0	66.072	1.284
21287	6050	Sisma X SLV	48.3	0	0	0	2.2E2	1.285	21288	6050	Sisma Y SLV	0	48.3	0	0	2.2E2	1.285
21289	6050	Sisma X SLD	47.5	0	0	0	2.2E2	1.285	21290	6050	Sisma Y SLD	0	47.5	0	0	2.2E2	1.285
21291	6051	Sisma X SLV	50.8	0	0	0	2.3E2	1.286	21292	6051	Sisma Y SLV	0	50.8	0	0	2.3E2	1.286
21293	6051	Sisma X SLD	50	0	0	0	2.3E2	1.286	21294	6051	Sisma Y SLD	0	50	0	0	2.3E2	1.286
21295	6052	Sisma X SLV	50.8	0	0	0	2.3E2	1.286	21296	6052	Sisma Y SLV	0	50.8	0	0	2.3E2	1.286
21297	6052	Sisma X SLD	50	0	0	0	2.3E2	1.286	21298	6052	Sisma Y SLD	0	50	0	0	2.3E2	1.286
21299	6053	Sisma X SLV	59.8	0	0	0	2.7E2	1.286	21300	6053	Sisma Y SLV	0	59.8	0	0	2.7E2	1.286
21301	6053	Sisma X SLD	58.8	0	0	0	2.7E2	1.286	21302	6053	Sisma Y SLD	0	58.8	0	0	2.7E2	1.286
21303	6054	Sisma X SLV	50.8	0	0	0	2.3E2	1.286	21304	6054	Sisma Y SLV	0	50.8	0	0	2.3E2	1.286
21305	6054	Sisma X SLD	50	0	0	0	2.3E2	1.286	21306	6054	Sisma Y SLD	0	50	0	0	2.3E2	1.286
21307	6055	Sisma X SLV	52	0	0	0	2.4E2	1.286	21308	6055	Sisma Y SLV	0	52	0	0	2.4E2	1.286
21309	6055	Sisma X SLD	51.2	0	0	0	2.4E2	1.286	21310	6055	Sisma Y SLD	0	51.2	0	0	2.4E2	1.286
21311	6056	Sisma X SLV	52.1	0	0	0	237.23	1.287	21312	6056	Sisma Y SLV	0	52.1	0	0	237.23	1.287
21313	6056	Sisma X SLD	51.3	0	0	0	237.23	1.287	21314	6056	Sisma Y SLD	0	51.3	0	0	237.23	1.287
21315	6057	Sisma X SLV	51.1	0	0	0	2.3E2	1.287	21316	6057	Sisma Y SLV	0	51.1	0	0	2.3E2	1.287
21317	6057	Sisma X SLD	50.3	0	0	0	2.3E2	1.287	21318	6057	Sisma Y SLD	0	50.3	0	0	2.3E2	1.287
21319	6058	Sisma X SLV	31.1	0	0	0	1.4E2	1.287	21320	6058	Sisma Y SLV	0	31.1	0	0	1.4E2	1.287
21321	6058	Sisma X SLD	30.6	0	0	0	1.4E2	1.287	21322	6058	Sisma Y SLD	0	30.6	0	0	1.4E2	1.287
21323	6059	Sisma X SLV	18.3	0	0	0	83.224	1.29	21324	6059	Sisma Y SLV	0	18.3	0	0	83.224	1.29
21325	6059	Sisma X SLD	18	0	0	0	83.224	1.29	21326	6059	Sisma Y SLD	0	18	0	0	83.224	1.29
21327	6060	Sisma X SLV	18.3	0	0	0	83.224	1.29	21328	6060	Sisma Y SLV	0	18.3	0	0	83.224	1.29
21329	6060	Sisma X SLD	18	0	0	0	83.224	1.29	21330	6060	Sisma Y SLD	0	18	0	0	83.224	1.29
21331	6061	Sisma X SLV	41	0	0	0	1.9E2	1.294	21332	6061	Sisma Y SLV	0	41	0	0	1.9E2	1.294
21333	6061	Sisma X SLD	40.4	0	0	0	1.9E2	1.294	21334	6061	Sisma Y SLD	0	40.4	0	0	1.9E2	1.294
21335	6062	Sisma X SLV	41	0	0	0	1.9E2	1.294	21336	6062	Sisma Y SLV	0	41	0	0	1.9E2	1.294
21337	6062	Sisma X SLD	40.4	0	0	0	1.9E2	1.294	21338	6062	Sisma Y SLD	0	40.4	0	0	1.9E2	1.294
21339	6063	Sisma X SLV	28	0	0	0	1.3E2	1.298	21340	6063	Sisma Y SLV	0	28	0	0	1.3E2	1.298
21341	6063	Sisma X SLD	27.6	0	0	0	1.3E2	1.298	21342	6063	Sisma Y SLD	0	27.6	0	0	1.3E2	1.298
21343	6064	Sisma X SLV	33.7	0	0	0	1.5E2	1.299	21344	6064	Sisma Y SLV	0	33.7	0	0	1.5E2	1.299
21345	6064	Sisma X SLD	33.1	0	0	0	1.5E2	1.299	21346	6064	Sisma Y SLD	0	33.1	0	0	1.5E2	1.299
21347	6065	Sisma X SLV	46.5	0	0	0	2.1E2	1.3	21348	6065	Sisma Y SLV	0	46.5	0	0	2.1E2	1.3
21349	6065	Sisma X SLD	45.7	0	0	0	2.1E2	1.3	21350	6065	Sisma Y SLD	0	45.7	0	0	2.1E2	1.3
21351	6066	Sisma X SLV	51.1	0	0	0	2.3E2	1.3	21352	6066	Sisma Y SLV	0	51.1	0	0	2.3E2	1.3
21353	6066	Sisma X SLD	50.3	0	0	0	2.3E2	1.3	21354	6066	Sisma Y SLD	0	50.3	0	0	2.3E2	1.3
21355	6067	Sisma X SLV	51.1	0	0	0	2.3E2	1.3	21356	6067	Sisma Y SLV	0	51.1	0	0	2.3E2	1.3
21357	6067	Sisma X SLD	50.3	0	0	0	2.3E2	1.3	21358	6067	Sisma Y SLD	0	50.3	0	0	2.3E2	1.3
21359	6068	Sisma X SLV	51.2	0	0	0	230.84	1.3	21360	6068	Sisma Y SLV	0	51.2	0	0	230.84	1.3
21361	6068	Sisma X SLD	50.4	0	0	0	230.84	1.3	21362	6068	Sisma Y SLD	0	50.4	0	0	230.84	1.3
21363	6069	Sisma X SLV	51.3	0	0	0	2.3E2	1.301	21364	6069	Sisma Y SLV	0	51.3	0	0	2.3E2	1.301
21365	6069	Sisma X SLD	50.5	0	0	0	2.3E2	1.301	21366	6069	Sisma Y SLD	0	50.5	0	0	2.3E2	1.301
21367	6070	Sisma X SLV	30.5	0	0	0	1.4E2	1.301	21368	6070	Sisma Y SLV	0	30.5	0	0	1.4E2	1.301
21369	6070	Sisma X SLD	30	0	0	0	1.4E2	1.301	21370	6070	Sisma Y SLD	0	30	0	0	1.4E2	1.301
21371	6071	Sisma X SLV	24.4	0	0	0	1.1E2	1.312	21372	6071	Sisma Y SLV	0	24.4	0	0	1.1E2	1.312
21373	6071	Sisma X SLD	24	0	0	0	1.1E2	1.312	21374	6071	Sisma Y SLD	0	24	0	0	1.1E2	1.312
21375	6072	Sisma X SLV	29.6	0	0	0	1.3E2	1.313	21376	6072	Sisma Y SLV	0	29.6	0	0	1.3E2	1.313
21377	6072	Sisma X SLD	29.1	0	0	0	1.3E2	1.313	21378	6072	Sisma Y SLD	0	29.1	0	0	1.3E2	1.313
21379	6073	Sisma X SLV	31.7	0	0	0	141.09	1.315	21380	6073	Sisma Y SLV	0	31.7	0	0	141.09	1.315
21381	6073	Sisma X SLD	31.2	0	0	0	141.09	1.315	21382	6073	Sisma Y SLD	0	31.2	0	0	141.09	1.315
21383	6074	Sisma X SLV	19.9	0	0	0	88.591	1.317	21384	6074	Sisma Y SLV	0	19.9	0	0	88.591	1.317
21385	6074	Sisma X SLD	19.6	0	0	0	88.591	1.317	21386	6074	Sisma Y SLD	0	19.6	0	0	88.591	1.317
21387	6075	Sisma X SLV	21.5	0	0	0	95.773	1.318	21388	6075	Sisma Y SLV	0	21.5	0	0	95.773	1.318
21389	6075	Sisma X SLD	21.2	0	0	0	95.773	1.318	21390	6075	Sisma Y SLD	0	21.2	0	0	95.773	1.318
21391	6076	Sisma X SLV	26.6	0	0	0	1.2E2	1.318	21392	6076	Sisma Y SLV	0	26.6	0	0	1.2E2	1.318
21393	6076	Sisma X SLD	26.2	0	0	0	1.2E2	1.318	21394	6076	Sisma Y SLD	0	26.2	0	0	1.2E2	1.318
21395	6077	Sisma X SLV	26.6	0	0	0	1.2E2	1.318	21396	6077	Sisma Y SLV	0	26.6	0	0	1.2E2	1.318
21397	6077	Sisma X SLD	26.2	0	0	0	1.2E2	1.318	21398	6077	Sisma Y SLD	0	26.2	0	0	1.2E2	1.318
21399	6078	Sisma X SLV	17.9	0	0	0	79.442	1.318	21400	6078	Sisma Y SLV	0	17.9	0	0	79.442	1.318
21401	6078	Sisma X SLD	17.6	0	0	0	79.442	1.318	21402	6078	Sisma Y SLD	0	17.6	0	0	79.442	1.318
21403	6079	Sisma X SLV	22	0	0	0	97.922	1.318	21404	6079	Sisma Y SLV	0	22	0	0	97.922	1.318
21405	6079	Sisma X SLD	21.7	0	0	0	97.922	1.318	21406	6079	Sisma Y SLD	0	21.7	0	0	97.922	1.318
21407	6080	Sisma X SLV	21.7	0	0	0	96.665	1.318	21408	6080	Sisma Y SLV	0	21.7	0	0	96.665	1.318
21409	6080	Sisma X SLD	21.4	0	0	0	96.665	1.318	21410	6080	Sisma Y SLD	0	21.4	0	0	96.665	1.318
21411	6081	Sisma X SLV	17.4	0	0	0	77.475	1.319	21412	6081	Sisma Y SLV	0	17.4	0	0	77.475	1.319
21413	6081	Sisma X SLD	17.2	0	0	0	77.475	1.319	21414	6081	Sisma Y SLD	0	17.2	0	0	77.475	1.319
21415	6082	Sisma X SLV	19.2	0	0	0	85.129	1.32	21416	6082	Sisma Y SLV	0	19.2	0	0	85.129	1.32

Indice	Nodo	Condizione	Fx	Fy	Fz	Mz	Peso	Gamma	Indice	Nodo	Condizione	Fx	Fy	Fz	Mz	Peso	Gamma
21417	6082	Sisma X SLD	18.9	0	0	0	85.129	1.32	21418	6082	Sisma Y SLD	0	18.9	0	0	85.129	1.32
21419	6083	Sisma X SLV	47.4	0	0	0	2.1E2	1.323	21420	6083	Sisma Y SLV	0	47.4	0	0	2.1E2	1.323
21421	6083	Sisma X SLD	46.7	0	0	0	2.1E2	1.323	21422	6083	Sisma Y SLD	0	46.7	0	0	2.1E2	1.323
21423	6084	Sisma X SLV	77.9	0	0	0	3.4E2	1.323	21424	6084	Sisma Y SLV	0	77.9	0	0	3.4E2	1.323
21425	6084	Sisma X SLD	76.6	0	0	0	3.4E2	1.323	21426	6084	Sisma Y SLD	0	76.6	0	0	3.4E2	1.323
21427	6085	Sisma X SLV	74.8	0	0	0	3.3E2	1.323	21428	6085	Sisma Y SLV	0	74.8	0	0	3.3E2	1.323
21429	6085	Sisma X SLD	73.6	0	0	0	3.3E2	1.323	21430	6085	Sisma Y SLD	0	73.6	0	0	3.3E2	1.323
21431	6086	Sisma X SLV	51.1	0	0	0	2.3E2	1.323	21432	6086	Sisma Y SLV	0	51.1	0	0	2.3E2	1.323
21433	6086	Sisma X SLD	50.3	0	0	0	2.3E2	1.323	21434	6086	Sisma Y SLD	0	50.3	0	0	2.3E2	1.323
21435	6087	Sisma X SLV	51.5	0	0	0	2.3E2	1.323	21436	6087	Sisma Y SLV	0	51.5	0	0	2.3E2	1.323
21437	6087	Sisma X SLD	50.7	0	0	0	2.3E2	1.323	21438	6087	Sisma Y SLD	0	50.7	0	0	2.3E2	1.323
21439	6088	Sisma X SLV	77.6	0	0	0	3.4E2	1.323	21440	6088	Sisma Y SLV	0	77.6	0	0	3.4E2	1.323
21441	6088	Sisma X SLD	76.3	0	0	0	3.4E2	1.323	21442	6088	Sisma Y SLD	0	76.3	0	0	3.4E2	1.323
21443	6089	Sisma X SLV	76.9	0	0	0	3.4E2	1.323	21444	6089	Sisma Y SLV	0	76.9	0	0	3.4E2	1.323
21445	6089	Sisma X SLD	75.7	0	0	0	3.4E2	1.323	21446	6089	Sisma Y SLD	0	75.7	0	0	3.4E2	1.323
21447	6090	Sisma X SLV	32.9	0	0	0	1.5E2	1.323	21448	6090	Sisma Y SLV	0	32.9	0	0	1.5E2	1.323
21449	6090	Sisma X SLD	32.3	0	0	0	1.5E2	1.323	21450	6090	Sisma Y SLD	0	32.3	0	0	1.5E2	1.323
21451	6091	Sisma X SLV	32.9	0	0	0	1.5E2	1.323	21452	6091	Sisma Y SLV	0	32.9	0	0	1.5E2	1.323
21453	6091	Sisma X SLD	32.3	0	0	0	1.5E2	1.323	21454	6091	Sisma Y SLD	0	32.3	0	0	1.5E2	1.323
21455	6092	Sisma X SLV	32.9	0	0	0	1.5E2	1.323	21456	6092	Sisma Y SLV	0	32.9	0	0	1.5E2	1.323
21457	6092	Sisma X SLD	32.3	0	0	0	1.5E2	1.323	21458	6092	Sisma Y SLD	0	32.3	0	0	1.5E2	1.323
21459	6093	Sisma X SLV	32.9	0	0	0	1.5E2	1.323	21460	6093	Sisma Y SLV	0	32.9	0	0	1.5E2	1.323
21461	6093	Sisma X SLD	32.3	0	0	0	1.5E2	1.323	21462	6093	Sisma Y SLD	0	32.3	0	0	1.5E2	1.323
21463	6094	Sisma X SLV	32.9	0	0	0	1.5E2	1.323	21464	6094	Sisma Y SLV	0	32.9	0	0	1.5E2	1.323
21465	6094	Sisma X SLD	32.3	0	0	0	1.5E2	1.323	21466	6094	Sisma Y SLD	0	32.3	0	0	1.5E2	1.323
21467	6095	Sisma X SLV	32.9	0	0	0	1.5E2	1.323	21468	6095	Sisma Y SLV	0	32.9	0	0	1.5E2	1.323
21469	6095	Sisma X SLD	32.3	0	0	0	1.5E2	1.323	21470	6095	Sisma Y SLD	0	32.3	0	0	1.5E2	1.323
21471	6096	Sisma X SLV	32.9	0	0	0	1.5E2	1.323	21472	6096	Sisma Y SLV	0	32.9	0	0	1.5E2	1.323
21473	6096	Sisma X SLD	32.3	0	0	0	1.5E2	1.323	21474	6096	Sisma Y SLD	0	32.3	0	0	1.5E2	1.323
21475	6097	Sisma X SLV	32.9	0	0	0	1.5E2	1.323	21476	6097	Sisma Y SLV	0	32.9	0	0	1.5E2	1.323
21477	6097	Sisma X SLD	32.3	0	0	0	1.5E2	1.323	21478	6097	Sisma Y SLD	0	32.3	0	0	1.5E2	1.323
21479	6098	Sisma X SLV	32.9	0	0	0	1.5E2	1.323	21480	6098	Sisma Y SLV	0	32.9	0	0	1.5E2	1.323
21481	6098	Sisma X SLD	32.4	0	0	0	1.5E2	1.323	21482	6098	Sisma Y SLD	0	32.4	0	0	1.5E2	1.323
21483	6099	Sisma X SLV	33	0	0	0	1.5E2	1.323	21484	6099	Sisma Y SLV	0	33	0	0	1.5E2	1.323
21485	6099	Sisma X SLD	32.5	0	0	0	1.5E2	1.323	21486	6099	Sisma Y SLD	0	32.5	0	0	1.5E2	1.323
21487	6100	Sisma X SLV	33.2	0	0	0	1.5E2	1.323	21488	6100	Sisma Y SLV	0	33.2	0	0	1.5E2	1.323
21489	6100	Sisma X SLD	32.7	0	0	0	1.5E2	1.323	21490	6100	Sisma Y SLD	0	32.7	0	0	1.5E2	1.323
21491	6101	Sisma X SLV	33.6	0	0	0	1.5E2	1.323	21492	6101	Sisma Y SLV	0	33.6	0	0	1.5E2	1.323
21493	6101	Sisma X SLD	33	0	0	0	1.5E2	1.323	21494	6101	Sisma Y SLD	0	33	0	0	1.5E2	1.323
21495	6102	Sisma X SLV	33.9	0	0	0	1.5E2	1.323	21496	6102	Sisma Y SLV	0	33.9	0	0	1.5E2	1.323
21497	6102	Sisma X SLD	33.4	0	0	0	1.5E2	1.323	21498	6102	Sisma Y SLD	0	33.4	0	0	1.5E2	1.323
21499	6103	Sisma X SLV	68.6	0	0	0	303.98	1.323	21500	6103	Sisma Y SLV	0	68.6	0	0	303.98	1.323
21501	6103	Sisma X SLD	67.5	0	0	0	303.98	1.323	21502	6103	Sisma Y SLD	0	67.5	0	0	303.98	1.323
21503	6104	Sisma X SLV	47.9	0	0	0	2.1E2	1.323	21504	6104	Sisma Y SLV	0	47.9	0	0	2.1E2	1.323
21505	6104	Sisma X SLD	47.1	0	0	0	2.1E2	1.323	21506	6104	Sisma Y SLD	0	47.1	0	0	2.1E2	1.323
21507	6105	Sisma X SLV	66.5	0	0	0	2.9E2	1.323	21508	6105	Sisma Y SLV	0	66.5	0	0	2.9E2	1.323
21509	6105	Sisma X SLD	65.4	0	0	0	2.9E2	1.323	21510	6105	Sisma Y SLD	0	65.4	0	0	2.9E2	1.323
21511	6106	Sisma X SLV	51.1	0	0	0	2.3E2	1.323	21512	6106	Sisma Y SLV	0	51.1	0	0	2.3E2	1.323
21513	6106	Sisma X SLD	50.3	0	0	0	2.3E2	1.323	21514	6106	Sisma Y SLD	0	50.3	0	0	2.3E2	1.323
21515	6107	Sisma X SLV	53.2	0	0	0	2.4E2	1.323	21516	6107	Sisma Y SLV	0	53.2	0	0	2.4E2	1.323
21517	6107	Sisma X SLD	52.4	0	0	0	2.4E2	1.323	21518	6107	Sisma Y SLD	0	52.4	0	0	2.4E2	1.323
21519	6108	Sisma X SLV	51.1	0	0	0	2.3E2	1.323	21520	6108	Sisma Y SLV	0	51.1	0	0	2.3E2	1.323
21521	6108	Sisma X SLD	50.3	0	0	0	2.3E2	1.323	21522	6108	Sisma Y SLD	0	50.3	0	0	2.3E2	1.323
21523	6109	Sisma X SLV	51.1	0	0	0	2.3E2	1.323	21524	6109	Sisma Y SLV	0	51.1	0	0	2.3E2	1.323
21525	6109	Sisma X SLD	50.3	0	0	0	2.3E2	1.323	21526	6109	Sisma Y SLD	0	50.3	0	0	2.3E2	1.323
21527	6110	Sisma X SLV	50.3	0	0	0	2.2E2	1.323	21528	6110	Sisma Y SLV	0	50.3	0	0	2.2E2	1.323
21529	6110	Sisma X SLD	49.5	0	0	0	2.2E2	1.323	21530	6110	Sisma Y SLD	0	49.5	0	0	2.2E2	1.323
21531	6111	Sisma X SLV	51.1	0	0	0	2.3E2	1.323	21532	6111	Sisma Y SLV	0	51.1	0	0	2.3E2	1.323
21533	6111	Sisma X SLD	50.3	0	0	0	2.3E2	1.323	21534	6111	Sisma Y SLD	0	50.3	0	0	2.3E2	1.323
21535	6112	Sisma X SLV	51.1	0	0	0	2.3E2	1.323	21536	6112	Sisma Y SLV	0	51.1	0	0	2.3E2	1.323
21537	6112	Sisma X SLD	50.3	0	0	0	2.3E2	1.323	21538	6112	Sisma Y SLD	0	50.3	0	0	2.3E2	1.323
21539	6113	Sisma X SLV	51.2	0	0	0	226.77	1.323	21540	6113	Sisma Y SLV	0	51.2	0	0	226.77	1.323
21541	6113	Sisma X SLD	50.4	0	0	0	226.77	1.323	21542	6113	Sisma Y SLD	0	50.4	0	0	226.77	1.323
21543	6114	Sisma X SLV	50.5	0	0	0	2.2E2	1.323	21544	6114	Sisma Y SLV	0	50.5	0	0	2.2E2	1.323
21545	6114	Sisma X SLD	49.7	0	0	0	2.2E2	1.323	21546	6114	Sisma Y SLD	0	49.7	0	0	2.2E2	1.323
21547	6115	Sisma X SLV	51.1	0	0	0	2.3E2	1.323	21548	6115	Sisma Y SLV	0	51.1	0	0	2.3E2	1.323
21549	6115	Sisma X SLD	50.3	0	0	0	2.3E2	1.323	21550	6115	Sisma Y SLD	0	50.3	0	0	2.3E2	1.323
21551	6116	Sisma X SLV	50.9	0	0	0	2.3E2	1.323	21552	6116	Sisma Y SLV	0	50.9	0	0	2.3E2	1.323
21553	6116	Sisma X SLD	50.1	0	0	0	2.3E2	1.323	21554	6116	Sisma Y SLD	0	50.1	0	0	2.3E2	1.323
21555	6117	Sisma X SLV	51.1	0	0	0	2.3E2	1.323	21556	6117	Sisma Y SLV	0	51.1	0	0	2.3E2	1.323
21557	6117	Sisma X SLD	50.3	0	0	0	2.3E2	1.323	21558	6117	Sisma Y SLD	0	50.3	0	0	2.3E2	1.323
21559	6118	Sisma X SLV	50.9	0	0	0	2.3E2	1.323	21560	6118	Sisma Y SLV	0	50.9	0	0	2.3E2	1.323
21561	6118	Sisma X SLD	50.1	0	0	0	2.3E2	1.323	21562	6118	Sisma Y SLD	0	50.1	0	0	2.3E2	1.323
21563	6119	Sisma X SLV	51.6	0	0	0	2.3E2	1.323	21564	6119	Sisma Y SLV	0	51.6	0	0	2.3E2	1.323
21565	6119	Sisma X SLD	50.8	0	0	0	2.3E2	1.323	21566	6119	Sisma Y SLD	0	50.8	0	0	2.3E2	1.323
21567	6120	Sisma X SLV	50.4	0	0	0	2.2E2	1.323	21568	6120	Sisma Y SLV	0	50.4	0	0	2.2E2	1.323
21569	6120	Sisma X SLD	49.6	0	0	0	2.2E2	1.323	21570	6120	Sisma Y SLD	0	49.6	0	0	2.2E2	1.323
21571	6121	Sisma X SLV	32.3	0	0	0	1.4E2	1.323	21572	6121	Sisma Y SLV	0	32.3	0	0	1.4E2	1.323
21573	6121	Sisma X SLD	31.8	0	0	0	1.4E2	1.323	21574	6121	Sisma Y SLD	0	31.8	0	0	1.4E2	1.323
21575	6122	Sisma X SLV	52.6	0	0	0	2.3E2	1.323	21576	6122	Sisma Y SLV	0	52.6	0	0	2.3E2	1.323
21577	6122	Sisma X SLD	51.8	0	0	0	2.3E2	1.323	21578	6122	Sisma Y SLD	0	51.8	0	0	2.3E2	1.323
21579	6123	Sisma X SLV	50.6	0	0	0	2.2E2	1.323	21580	6123	Sisma Y SLV	0	50.6	0	0	2.2E2	1.323
21581	6123	Sisma X SLD	49.8	0	0	0	2.2E2	1.323	21582	6123	Sisma Y SLD	0	49.8	0	0	2.2E2	1.323
21583	6124	Sisma X SLV	52.6	0	0	0	2.3E2	1.323	21584	6124	Sisma Y SLV	0	52.6	0	0	2.3E2	1.323
21585	6124	Sisma X SLD	51.8	0	0	0	2.3E2	1.323	21586	6124	Sisma Y SLD	0	51.8	0	0	2.3E2	1.323
21587	6125	Sisma X SLV	49.3	0	0	0	2.2E2	1.323	21588	6125	Sisma Y SLV	0	49.3	0	0	2.2E2	1.323
21589	6125	Sisma X SLD	48.5	0	0	0	2.2E2	1.323	21590	6125	Sisma Y SLD	0	48.5	0	0	2.2E2	1.323
21591	6126	Sisma X SLV	51.9	0	0	0	2.3E2	1.323	21592	6126	Sisma Y SLV	0	51.9	0	0	2.3E2	1.323
21593	6126	Sisma X SLD	51.1	0	0	0	2.3E2	1.323	21594	6126	Sisma Y SLD	0	51.1	0	0	2.3E2	1.323
21595	6127	Sisma X SLV	32.3	0	0	0	1.4E2	1.323	21596	6127	Sisma Y SLV	0	32.3	0	0	1.4E2	1.323
21597	6127	Sisma X SLD	31.8	0	0	0	1.4E2	1.323	21598	6127	Sisma Y SLD	0	31.8	0	0	1.4E2	1.323
21599	6128	Sisma X SLV	32.3	0	0	0	1.4E2	1.323	21600	6128	Sisma Y SLV	0	32.3	0	0	1.4E2	1.323
21601	6128	Sisma X SLD	31.8	0	0	0	1.4E2	1.323	21602	6128	Sisma Y SLD	0	31.8	0	0	1.4E2	1.323
21603	6129	Sisma X SLV	51.3	0	0	0	2.3E2	1.323	21604	6129	Sisma Y SLV	0	51.3	0	0	2.3E2	1.323
21605	6129	Sisma X SLD	50.4	0	0	0	2.3E2	1.323	21606	6129	Sisma Y SLD	0	50.4	0	0	2.3E2	1.323
21607	6130	Sisma X SLV	50.7	0	0	0	2.2E2	1.323	21608	6130	Sisma Y SLV	0	50.7	0	0	2.2E2	1.323
21609	6130	Sisma X SLD	49.9	0	0	0	2.2E2	1.323	21610	6130	Sisma Y SLD	0	49.9	0	0	2.2E2	1.323
21611	6131	Sisma X SLV	47.2	0	0	0	2.1E2	1.323	21612	6131	Sisma Y SLV	0	47.2	0	0	2.1E2	1.323
21613	6131	Sisma X SLD	46.5	0	0	0	2.1E2	1.323	21614	6131	Sisma Y SLD	0	46.5	0	0	2.1E2	1.323
21615	6132	Sisma X SLV	47.7	0	0	0	2.1E2	1.323	21616	6132	Sisma Y SLV	0	47.7	0	0	2.1E2	1.323
21617	6132	Sisma X SLD	47	0	0	0	2.1E2	1.323	21618	6132	Sisma Y SLD	0	47	0	0	2.1E2	1.323
21619	6133	Sisma X SLV	47.4	0	0	0	2.1E2	1.323	21620	6133	Sisma Y SLV	0	47.4	0	0	2.1E2	1.323
21621	6133	Sisma X SLD	46.6	0	0	0	2.1E2	1.323	21622	6133	Sisma Y SLD	0	46.6	0	0	2.1E2	1.323
21623	6134	Sisma X SLV	55.2	0	0	0	2.4E2	1.323	21624	6134	Sisma Y SLV	0	55.2	0	0	2.4E2	1.323

muratura

Indice	Nodo	Condizione	Fx	Fy	Fz	Mz	Peso	Gamma	Indice	Nodo	Condizione	Fx	Fy	Fz	Mz	Peso	Gamma
21625	6134	Sisma X SLD	54.3	0	0	0	2.4E2	1.323	21626	6134	Sisma Y SLD	0	54.3	0	0	2.4E2	1.323
21627	6135	Sisma X SLV	50	0	0	0	221.25	1.323	21628	6135	Sisma Y SLV	0	50	0	0	221.25	1.323
21629	6135	Sisma X SLD	49.2	0	0	0	221.25	1.323	21630	6135	Sisma Y SLD	0	49.2	0	0	221.25	1.323
21631	6136	Sisma X SLV	54.3	0	0	0	2.4E2	1.323	21632	6136	Sisma Y SLV	0	54.3	0	0	2.4E2	1.323
21633	6136	Sisma X SLD	53.4	0	0	0	2.4E2	1.323	21634	6136	Sisma Y SLD	0	53.4	0	0	2.4E2	1.323
21635	6137	Sisma X SLV	32.3	0	0	0	1.4E2	1.323	21636	6137	Sisma Y SLV	0	32.3	0	0	1.4E2	1.323
21637	6137	Sisma X SLD	31.8	0	0	0	1.4E2	1.323	21638	6137	Sisma Y SLD	0	31.8	0	0	1.4E2	1.323
21639	6138	Sisma X SLV	35.1	0	0	0	1.6E2	1.323	21640	6138	Sisma Y SLV	0	35.1	0	0	1.6E2	1.323
21641	6138	Sisma X SLD	34.5	0	0	0	1.6E2	1.323	21642	6138	Sisma Y SLD	0	34.5	0	0	1.6E2	1.323
21643	6139	Sisma X SLV	35.1	0	0	0	1.6E2	1.323	21644	6139	Sisma Y SLV	0	35.1	0	0	1.6E2	1.323
21645	6139	Sisma X SLD	34.5	0	0	0	1.6E2	1.323	21646	6139	Sisma Y SLD	0	34.5	0	0	1.6E2	1.323
21647	6140	Sisma X SLV	39.9	0	0	0	1.8E2	1.323	21648	6140	Sisma Y SLV	0	39.9	0	0	1.8E2	1.323
21649	6140	Sisma X SLD	39.3	0	0	0	1.8E2	1.323	21650	6140	Sisma Y SLD	0	39.3	0	0	1.8E2	1.323
21651	6141	Sisma X SLV	46.2	0	0	0	2.0E2	1.323	21652	6141	Sisma Y SLV	0	46.2	0	0	2.0E2	1.323
21653	6141	Sisma X SLD	45.5	0	0	0	2.0E2	1.323	21654	6141	Sisma Y SLD	0	45.5	0	0	2.0E2	1.323
21655	6142	Sisma X SLV	50.2	0	0	0	2.2E2	1.323	21656	6142	Sisma Y SLV	0	50.2	0	0	2.2E2	1.323
21657	6142	Sisma X SLD	49.4	0	0	0	2.2E2	1.323	21658	6142	Sisma Y SLD	0	49.4	0	0	2.2E2	1.323
21659	6143	Sisma X SLV	32.3	0	0	0	1.4E2	1.323	21660	6143	Sisma Y SLV	0	32.3	0	0	1.4E2	1.323
21661	6143	Sisma X SLD	31.8	0	0	0	1.4E2	1.323	21662	6143	Sisma Y SLD	0	31.8	0	0	1.4E2	1.323
21663	6144	Sisma X SLV	32.3	0	0	0	1.4E2	1.324	21664	6144	Sisma Y SLV	0	32.3	0	0	1.4E2	1.324
21665	6144	Sisma X SLD	31.8	0	0	0	1.4E2	1.324	21666	6144	Sisma Y SLD	0	31.8	0	0	1.4E2	1.324
21667	6145	Sisma X SLV	48.8	0	0	0	2.2E2	1.324	21668	6145	Sisma Y SLV	0	48.8	0	0	2.2E2	1.324
21669	6145	Sisma X SLD	48.1	0	0	0	2.2E2	1.324	21670	6145	Sisma Y SLD	0	48.1	0	0	2.2E2	1.324
21671	6146	Sisma X SLV	32.3	0	0	0	1.4E2	1.324	21672	6146	Sisma Y SLV	0	32.3	0	0	1.4E2	1.324
21673	6146	Sisma X SLD	31.8	0	0	0	1.4E2	1.324	21674	6146	Sisma Y SLD	0	31.8	0	0	1.4E2	1.324
21675	6147	Sisma X SLV	54.4	0	0	0	2.4E2	1.324	21676	6147	Sisma Y SLV	0	54.4	0	0	2.4E2	1.324
21677	6147	Sisma X SLD	53.5	0	0	0	2.4E2	1.324	21678	6147	Sisma Y SLD	0	53.5	0	0	2.4E2	1.324
21679	6148	Sisma X SLV	55	0	0	0	2.4E2	1.324	21680	6148	Sisma Y SLV	0	55	0	0	2.4E2	1.324
21681	6148	Sisma X SLD	54.2	0	0	0	2.4E2	1.324	21682	6148	Sisma Y SLD	0	54.2	0	0	2.4E2	1.324
21683	6149	Sisma X SLV	54.9	0	0	0	2.4E2	1.324	21684	6149	Sisma Y SLV	0	54.9	0	0	2.4E2	1.324
21685	6149	Sisma X SLD	54	0	0	0	2.4E2	1.324	21686	6149	Sisma Y SLD	0	54	0	0	2.4E2	1.324
21687	6150	Sisma X SLV	52	0	0	0	2.3E2	1.324	21688	6150	Sisma Y SLV	0	52	0	0	2.3E2	1.324
21689	6150	Sisma X SLD	51.1	0	0	0	2.3E2	1.324	21690	6150	Sisma Y SLD	0	51.1	0	0	2.3E2	1.324
21691	6151	Sisma X SLV	32.3	0	0	0	1.4E2	1.324	21692	6151	Sisma Y SLV	0	32.3	0	0	1.4E2	1.324
21693	6151	Sisma X SLD	31.8	0	0	0	1.4E2	1.324	21694	6151	Sisma Y SLD	0	31.8	0	0	1.4E2	1.324
21695	6152	Sisma X SLV	49.2	0	0	0	2.2E2	1.324	21696	6152	Sisma Y SLV	0	49.2	0	0	2.2E2	1.324
21697	6152	Sisma X SLD	48.4	0	0	0	2.2E2	1.324	21698	6152	Sisma Y SLD	0	48.4	0	0	2.2E2	1.324
21699	6153	Sisma X SLV	44.3	0	0	0	2.0E2	1.324	21700	6153	Sisma Y SLV	0	44.3	0	0	2.0E2	1.324
21701	6153	Sisma X SLD	43.6	0	0	0	2.0E2	1.324	21702	6153	Sisma Y SLD	0	43.6	0	0	2.0E2	1.324
21703	6154	Sisma X SLV	44.6	0	0	0	2.0E2	1.324	21704	6154	Sisma Y SLV	0	44.6	0	0	2.0E2	1.324
21705	6154	Sisma X SLD	43.9	0	0	0	2.0E2	1.324	21706	6154	Sisma Y SLD	0	43.9	0	0	2.0E2	1.324
21707	6155	Sisma X SLV	44.4	0	0	0	2.0E2	1.324	21708	6155	Sisma Y SLV	0	44.4	0	0	2.0E2	1.324
21709	6155	Sisma X SLD	43.7	0	0	0	2.0E2	1.324	21710	6155	Sisma Y SLD	0	43.7	0	0	2.0E2	1.324
21711	6156	Sisma X SLV	59.1	0	0	0	2.6E2	1.324	21712	6156	Sisma Y SLV	0	59.1	0	0	2.6E2	1.324
21713	6156	Sisma X SLD	58.1	0	0	0	2.6E2	1.324	21714	6156	Sisma Y SLD	0	58.1	0	0	2.6E2	1.324
21715	6157	Sisma X SLV	49	0	0	0	216.84	1.324	21716	6157	Sisma Y SLV	0	49	0	0	216.84	1.324
21717	6157	Sisma X SLD	48.2	0	0	0	216.84	1.324	21718	6157	Sisma Y SLD	0	48.2	0	0	216.84	1.324
21719	6158	Sisma X SLV	56.4	0	0	0	249.65	1.324	21720	6158	Sisma Y SLV	0	56.4	0	0	249.65	1.324
21721	6158	Sisma X SLD	55.5	0	0	0	249.65	1.324	21722	6158	Sisma Y SLD	0	55.5	0	0	249.65	1.324
21723	6159	Sisma X SLV	47	0	0	0	2.1E2	1.324	21724	6159	Sisma Y SLV	0	47	0	0	2.1E2	1.324
21725	6159	Sisma X SLD	46.3	0	0	0	2.1E2	1.324	21726	6159	Sisma Y SLD	0	46.3	0	0	2.1E2	1.324
21727	6160	Sisma X SLV	32.3	0	0	0	1.4E2	1.324	21728	6160	Sisma Y SLV	0	32.3	0	0	1.4E2	1.324
21729	6160	Sisma X SLD	31.8	0	0	0	1.4E2	1.324	21730	6160	Sisma Y SLD	0	31.8	0	0	1.4E2	1.324
21731	6161	Sisma X SLV	51.8	0	0	0	2.3E2	1.324	21732	6161	Sisma Y SLV	0	51.8	0	0	2.3E2	1.324
21733	6161	Sisma X SLD	50.9	0	0	0	2.3E2	1.324	21734	6161	Sisma Y SLD	0	50.9	0	0	2.3E2	1.324
21735	6162	Sisma X SLV	51.3	0	0	0	2.3E2	1.324	21736	6162	Sisma Y SLV	0	51.3	0	0	2.3E2	1.324
21737	6162	Sisma X SLD	50.4	0	0	0	2.3E2	1.324	21738	6162	Sisma Y SLD	0	50.4	0	0	2.3E2	1.324
21739	6163	Sisma X SLV	52.4	0	0	0	231.88	1.324	21740	6163	Sisma Y SLV	0	52.4	0	0	231.88	1.324
21741	6163	Sisma X SLD	51.6	0	0	0	231.88	1.324	21742	6163	Sisma Y SLD	0	51.6	0	0	231.88	1.324
21743	6164	Sisma X SLV	38.8	0	0	0	1.7E2	1.324	21744	6164	Sisma Y SLV	0	38.8	0	0	1.7E2	1.324
21745	6164	Sisma X SLD	38.2	0	0	0	1.7E2	1.324	21746	6164	Sisma Y SLD	0	38.2	0	0	1.7E2	1.324
21747	6165	Sisma X SLV	45.3	0	0	0	2.0E2	1.324	21748	6165	Sisma Y SLV	0	45.3	0	0	2.0E2	1.324
21749	6165	Sisma X SLD	44.5	0	0	0	2.0E2	1.324	21750	6165	Sisma Y SLD	0	44.5	0	0	2.0E2	1.324
21751	6166	Sisma X SLV	32.4	0	0	0	1.4E2	1.324	21752	6166	Sisma Y SLV	0	32.4	0	0	1.4E2	1.324
21753	6166	Sisma X SLD	31.9	0	0	0	1.4E2	1.324	21754	6166	Sisma Y SLD	0	31.9	0	0	1.4E2	1.324
21755	6167	Sisma X SLV	50.9	0	0	0	2.3E2	1.324	21756	6167	Sisma Y SLV	0	50.9	0	0	2.3E2	1.324
21757	6167	Sisma X SLD	50.1	0	0	0	2.3E2	1.324	21758	6167	Sisma Y SLD	0	50.1	0	0	2.3E2	1.324
21759	6168	Sisma X SLV	53.1	0	0	0	235.12	1.324	21760	6168	Sisma Y SLV	0	53.1	0	0	235.12	1.324
21761	6168	Sisma X SLD	52.3	0	0	0	235.12	1.324	21762	6168	Sisma Y SLD	0	52.3	0	0	235.12	1.324
21763	6169	Sisma X SLV	55.5	0	0	0	2.5E2	1.324	21764	6169	Sisma Y SLV	0	55.5	0	0	2.5E2	1.324
21765	6169	Sisma X SLD	54.6	0	0	0	2.5E2	1.324	21766	6169	Sisma Y SLD	0	54.6	0	0	2.5E2	1.324
21767	6170	Sisma X SLV	55.4	0	0	0	2.5E2	1.324	21768	6170	Sisma Y SLV	0	55.4	0	0	2.5E2	1.324
21769	6170	Sisma X SLD	54.5	0	0	0	2.5E2	1.324	21770	6170	Sisma Y SLD	0	54.5	0	0	2.5E2	1.324
21771	6171	Sisma X SLV	54.7	0	0	0	2.4E2	1.324	21772	6171	Sisma Y SLV	0	54.7	0	0	2.4E2	1.324
21773	6171	Sisma X SLD	53.8	0	0	0	2.4E2	1.324	21774	6171	Sisma Y SLD	0	53.8	0	0	2.4E2	1.324
21775	6172	Sisma X SLV	54.6	0	0	0	2.4E2	1.324	21776	6172	Sisma Y SLV	0	54.6	0	0	2.4E2	1.324
21777	6172	Sisma X SLD	53.8	0	0	0	2.4E2	1.324	21778	6172	Sisma Y SLD	0	53.8	0	0	2.4E2	1.324
21779	6173	Sisma X SLV	32.7	0	0	0	1.4E2	1.324	21780	6173	Sisma Y SLV	0	32.7	0	0	1.4E2	1.324
21781	6173	Sisma X SLD	32.1	0	0	0	1.4E2	1.324	21782	6173	Sisma Y SLD	0	32.1	0	0	1.4E2	1.324
21783	6174	Sisma X SLV	50.7	0	0	0	2.2E2	1.324	21784	6174	Sisma Y SLV	0	50.7	0	0	2.2E2	1.324
21785	6174	Sisma X SLD	49.8	0	0	0	2.2E2	1.324	21786	6174	Sisma Y SLD	0	49.8	0	0	2.2E2	1.324
21787	6175	Sisma X SLV	37	0	0	0	1.6E2	1.324	21788	6175	Sisma Y SLV	0	37	0	0	1.6E2	1.324
21789	6175	Sisma X SLD	36.5	0	0	0	1.6E2	1.324	21790	6175	Sisma Y SLD	0	36.5	0	0	1.6E2	1.324
21791	6176	Sisma X SLV	37	0	0	0	1.6E2	1.324	21792	6176	Sisma Y SLV	0	37	0	0	1.6E2	1.324
21793	6176	Sisma X SLD	36.5	0	0	0	1.6E2	1.324	21794	6176	Sisma Y SLD	0	36.5	0	0	1.6E2	1.324
21795	6177	Sisma X SLV	54.2	0	0	0	2.4E2	1.324	21796	6177	Sisma Y SLV	0	54.2	0	0	2.4E2	1.324
21797	6177	Sisma X SLD	53.3	0	0	0	2.4E2	1.324	21798	6177	Sisma Y SLD	0	53.3	0	0	2.4E2	1.324
21799	6178	Sisma X SLV	54.2	0	0	0	2.4E2	1.324	21800	6178	Sisma Y SLV	0	54.2	0	0	2.4E2	1.324
21801	6178	Sisma X SLD	53.3	0	0	0	2.4E2	1.324	21802	6178	Sisma Y SLD	0	53.3	0	0	2.4E2	1.324
21803	6179	Sisma X SLV	44.2	0	0	0	2.0E2	1.324	21804	6179	Sisma Y SLV	0	44.2	0	0	2.0E2	1.324
21805	6179	Sisma X SLD	43.5	0	0	0	2.0E2	1.324	21806	6179	Sisma Y SLD	0	43.5	0	0	2.0E2	1.324
21807	6180	Sisma X SLV	33	0	0	0	1.5E2	1.324	21808	6180	Sisma Y SLV	0	33	0	0	1.5E2	1.324
21809	6180	Sisma X SLD	32.5	0	0	0	1.5E2	1.324	21810	6180	Sisma Y SLD	0	32.5	0	0	1.5E2	1.324
21811	6181	Sisma X SLV	57.7	0	0	0	2.6E2	1.324	21812	6181	Sisma Y SLV	0	57.7	0	0	2.6E2	1.324
21813	6181	Sisma X SLD	56.8	0	0	0	2.6E2	1.324	21814	6181	Sisma Y SLD	0	56.8	0	0	2.6E2	1.324
21815	6182	Sisma X SLV	56.6	0	0	0	2.5E2	1.324	21816	6182	Sisma Y SLV	0	56.6	0	0	2.5E2	1.324
21817	6182	Sisma X SLD	55.7	0	0	0	2.5E2	1.324	21818	6182	Sisma Y SLD	0	55.7	0	0	2.5E2	1.324
21819	6183	Sisma X SLV	56.5	0	0	0	2.5E2	1.324	21820	6183	Sisma Y SLV	0	56.5	0	0	2.5E2	1.324
21821	6183	Sisma X SLD	55.6	0	0	0	2.5E2	1.324	21822	6183	Sisma Y SLD	0	55.6	0	0	2.5E2	1.324
21823	6184	Sisma X SLV	54	0	0	0	2.4E2	1.324	21824	6184	Sisma Y SLV	0	54	0	0	2.4E2	1.324
21825	6184	Sisma X SLD	53.1	0	0	0	2.4E2	1.324	21826	6184	Sisma Y SLD	0	53.1	0	0	2.4E2	1.324

Indice	Nodo	Condizione	Fx	Fy	Fz	Mz	Peso	Gamma	Indice	Nodo	Condizione	Fx	Fy	Fz	Mz	Peso	Gamma
21827	6185	Sisma X SLV	58.8	0	0	0	259.96	1.325	21828	6185	Sisma Y SLV	0	58.8	0	0	259.96	1.325
21829	6185	Sisma X SLD	57.8	0	0	0	259.96	1.325	21830	6185	Sisma Y SLD	0	57.8	0	0	259.96	1.325
21831	6186	Sisma X SLV	57	0	0	0	2.5E2	1.325	21832	6186	Sisma Y SLV	0	57	0	0	2.5E2	1.325
21833	6186	Sisma X SLD	56.1	0	0	0	2.5E2	1.325	21834	6186	Sisma Y SLD	0	56.1	0	0	2.5E2	1.325
21835	6187	Sisma X SLV	50.5	0	0	0	2.2E2	1.325	21836	6187	Sisma Y SLV	0	50.5	0	0	2.2E2	1.325
21837	6187	Sisma X SLD	49.7	0	0	0	2.2E2	1.325	21838	6187	Sisma Y SLD	0	49.7	0	0	2.2E2	1.325
21839	6188	Sisma X SLV	54	0	0	0	2.4E2	1.325	21840	6188	Sisma Y SLV	0	54	0	0	2.4E2	1.325
21841	6188	Sisma X SLD	53.2	0	0	0	2.4E2	1.325	21842	6188	Sisma Y SLD	0	53.2	0	0	2.4E2	1.325
21843	6189	Sisma X SLV	54	0	0	0	238.89	1.325	21844	6189	Sisma Y SLV	0	54	0	0	238.89	1.325
21845	6189	Sisma X SLD	53.1	0	0	0	238.89	1.325	21846	6189	Sisma Y SLD	0	53.1	0	0	238.89	1.325
21847	6190	Sisma X SLV	32.9	0	0	0	1.5E2	1.325	21848	6190	Sisma Y SLV	0	32.9	0	0	1.5E2	1.325
21849	6190	Sisma X SLD	32.4	0	0	0	1.5E2	1.325	21850	6190	Sisma Y SLD	0	32.4	0	0	1.5E2	1.325
21851	6191	Sisma X SLV	32.9	0	0	0	1.5E2	1.325	21852	6191	Sisma Y SLV	0	32.9	0	0	1.5E2	1.325
21853	6191	Sisma X SLD	32.4	0	0	0	1.5E2	1.325	21854	6191	Sisma Y SLD	0	32.4	0	0	1.5E2	1.325
21855	6192	Sisma X SLV	32.9	0	0	0	1.5E2	1.325	21856	6192	Sisma Y SLV	0	32.9	0	0	1.5E2	1.325
21857	6192	Sisma X SLD	32.4	0	0	0	1.5E2	1.325	21858	6192	Sisma Y SLD	0	32.4	0	0	1.5E2	1.325
21859	6193	Sisma X SLV	32.9	0	0	0	1.5E2	1.325	21860	6193	Sisma Y SLV	0	32.9	0	0	1.5E2	1.325
21861	6193	Sisma X SLD	32.4	0	0	0	1.5E2	1.325	21862	6193	Sisma Y SLD	0	32.4	0	0	1.5E2	1.325
21863	6194	Sisma X SLV	32.9	0	0	0	1.5E2	1.325	21864	6194	Sisma Y SLV	0	32.9	0	0	1.5E2	1.325
21865	6194	Sisma X SLD	32.4	0	0	0	1.5E2	1.325	21866	6194	Sisma Y SLD	0	32.4	0	0	1.5E2	1.325
21867	6195	Sisma X SLV	32.9	0	0	0	1.5E2	1.325	21868	6195	Sisma Y SLV	0	32.9	0	0	1.5E2	1.325
21869	6195	Sisma X SLD	32.4	0	0	0	1.5E2	1.325	21870	6195	Sisma Y SLD	0	32.4	0	0	1.5E2	1.325
21871	6196	Sisma X SLV	33	0	0	0	1.5E2	1.325	21872	6196	Sisma Y SLV	0	33	0	0	1.5E2	1.325
21873	6196	Sisma X SLD	32.5	0	0	0	1.5E2	1.325	21874	6196	Sisma Y SLD	0	32.5	0	0	1.5E2	1.325
21875	6197	Sisma X SLV	33.4	0	0	0	1.5E2	1.325	21876	6197	Sisma Y SLV	0	33.4	0	0	1.5E2	1.325
21877	6197	Sisma X SLD	32.8	0	0	0	1.5E2	1.325	21878	6197	Sisma Y SLD	0	32.8	0	0	1.5E2	1.325
21879	6198	Sisma X SLV	32.9	0	0	0	1.5E2	1.325	21880	6198	Sisma Y SLV	0	32.9	0	0	1.5E2	1.325
21881	6198	Sisma X SLD	32.4	0	0	0	1.5E2	1.325	21882	6198	Sisma Y SLD	0	32.4	0	0	1.5E2	1.325
21883	6199	Sisma X SLV	33.3	0	0	0	1.5E2	1.325	21884	6199	Sisma Y SLV	0	33.3	0	0	1.5E2	1.325
21885	6199	Sisma X SLD	32.7	0	0	0	1.5E2	1.325	21886	6199	Sisma Y SLD	0	32.7	0	0	1.5E2	1.325
21887	6200	Sisma X SLV	60.5	0	0	0	2.7E2	1.325	21888	6200	Sisma Y SLV	0	60.5	0	0	2.7E2	1.325
21889	6200	Sisma X SLD	59.5	0	0	0	2.7E2	1.325	21890	6200	Sisma Y SLD	0	59.5	0	0	2.7E2	1.325
21891	6201	Sisma X SLV	56.6	0	0	0	2.5E2	1.325	21892	6201	Sisma Y SLV	0	56.6	0	0	2.5E2	1.325
21893	6201	Sisma X SLD	55.7	0	0	0	2.5E2	1.325	21894	6201	Sisma Y SLD	0	55.7	0	0	2.5E2	1.325
21895	6202	Sisma X SLV	32.9	0	0	0	1.5E2	1.325	21896	6202	Sisma Y SLV	0	32.9	0	0	1.5E2	1.325
21897	6202	Sisma X SLD	32.4	0	0	0	1.5E2	1.325	21898	6202	Sisma Y SLD	0	32.4	0	0	1.5E2	1.325
21899	6203	Sisma X SLV	33.6	0	0	0	1.5E2	1.325	21900	6203	Sisma Y SLV	0	33.6	0	0	1.5E2	1.325
21901	6203	Sisma X SLD	33.1	0	0	0	1.5E2	1.325	21902	6203	Sisma Y SLD	0	33.1	0	0	1.5E2	1.325
21903	6204	Sisma X SLV	45.6	0	0	0	2.0E2	1.325	21904	6204	Sisma Y SLV	0	45.6	0	0	2.0E2	1.325
21905	6204	Sisma X SLD	44.8	0	0	0	2.0E2	1.325	21906	6204	Sisma Y SLD	0	44.8	0	0	2.0E2	1.325
21907	6205	Sisma X SLV	42.8	0	0	0	1.9E2	1.325	21908	6205	Sisma Y SLV	0	42.8	0	0	1.9E2	1.325
21909	6205	Sisma X SLD	42.1	0	0	0	1.9E2	1.325	21910	6205	Sisma Y SLD	0	42.1	0	0	1.9E2	1.325
21911	6206	Sisma X SLV	32.9	0	0	0	1.5E2	1.325	21912	6206	Sisma Y SLV	0	32.9	0	0	1.5E2	1.325
21913	6206	Sisma X SLD	32.4	0	0	0	1.5E2	1.325	21914	6206	Sisma Y SLD	0	32.4	0	0	1.5E2	1.325
21915	6207	Sisma X SLV	34	0	0	0	1.5E2	1.325	21916	6207	Sisma Y SLV	0	34	0	0	1.5E2	1.325
21917	6207	Sisma X SLD	33.4	0	0	0	1.5E2	1.325	21918	6207	Sisma Y SLD	0	33.4	0	0	1.5E2	1.325
21919	6208	Sisma X SLV	33.2	0	0	0	1.5E2	1.325	21920	6208	Sisma Y SLV	0	33.2	0	0	1.5E2	1.325
21921	6208	Sisma X SLD	32.7	0	0	0	1.5E2	1.325	21922	6208	Sisma Y SLD	0	32.7	0	0	1.5E2	1.325
21923	6209	Sisma X SLV	24	0	0	0	1.1E2	1.325	21924	6209	Sisma Y SLV	0	24	0	0	1.1E2	1.325
21925	6209	Sisma X SLD	23.6	0	0	0	1.1E2	1.325	21926	6209	Sisma Y SLD	0	23.6	0	0	1.1E2	1.325
21927	6210	Sisma X SLV	24.1	0	0	0	1.1E2	1.325	21928	6210	Sisma Y SLV	0	24.1	0	0	1.1E2	1.325
21929	6210	Sisma X SLD	23.7	0	0	0	1.1E2	1.325	21930	6210	Sisma Y SLD	0	23.7	0	0	1.1E2	1.325
21931	6211	Sisma X SLV	24.2	0	0	0	1.1E2	1.325	21932	6211	Sisma Y SLV	0	24.2	0	0	1.1E2	1.325
21933	6211	Sisma X SLD	23.8	0	0	0	1.1E2	1.325	21934	6211	Sisma Y SLD	0	23.8	0	0	1.1E2	1.325
21935	6212	Sisma X SLV	42.8	0	0	0	1.9E2	1.325	21936	6212	Sisma Y SLV	0	42.8	0	0	1.9E2	1.325
21937	6212	Sisma X SLD	42.1	0	0	0	1.9E2	1.325	21938	6212	Sisma Y SLD	0	42.1	0	0	1.9E2	1.325
21939	6213	Sisma X SLV	37.4	0	0	0	1.7E2	1.325	21940	6213	Sisma Y SLV	0	37.4	0	0	1.7E2	1.325
21941	6213	Sisma X SLD	36.8	0	0	0	1.7E2	1.325	21942	6213	Sisma Y SLD	0	36.8	0	0	1.7E2	1.325
21943	6214	Sisma X SLV	17.6	0	0	0	77.85	1.325	21944	6214	Sisma Y SLV	0	17.6	0	0	77.85	1.325
21945	6214	Sisma X SLD	17.3	0	0	0	77.85	1.325	21946	6214	Sisma Y SLD	0	17.3	0	0	77.85	1.325
21947	6215	Sisma X SLV	18	0	0	0	79.537	1.325	21948	6215	Sisma Y SLV	0	18	0	0	79.537	1.325
21949	6215	Sisma X SLD	17.7	0	0	0	79.537	1.325	21950	6215	Sisma Y SLD	0	17.7	0	0	79.537	1.325
21951	6216	Sisma X SLV	31.5	0	0	0	1.4E2	1.325	21952	6216	Sisma Y SLV	0	31.5	0	0	1.4E2	1.325
21953	6216	Sisma X SLD	31	0	0	0	1.4E2	1.325	21954	6216	Sisma Y SLD	0	31	0	0	1.4E2	1.325
21955	6217	Sisma X SLV	40	0	0	0	1.8E2	1.325	21956	6217	Sisma Y SLV	0	40	0	0	1.8E2	1.325
21957	6217	Sisma X SLD	39.4	0	0	0	1.8E2	1.325	21958	6217	Sisma Y SLD	0	39.4	0	0	1.8E2	1.325
21959	6218	Sisma X SLV	26.5	0	0	0	1.2E2	1.325	21960	6218	Sisma Y SLV	0	26.5	0	0	1.2E2	1.325
21961	6218	Sisma X SLD	26	0	0	0	1.2E2	1.325	21962	6218	Sisma Y SLD	0	26	0	0	1.2E2	1.325
21963	6219	Sisma X SLV	26.1	0	0	0	1.2E2	1.325	21964	6219	Sisma Y SLV	0	26.1	0	0	1.2E2	1.325
21965	6219	Sisma X SLD	25.7	0	0	0	1.2E2	1.325	21966	6219	Sisma Y SLD	0	25.7	0	0	1.2E2	1.325
21967	6220	Sisma X SLV	38.9	0	0	0	1.7E2	1.325	21968	6220	Sisma Y SLV	0	38.9	0	0	1.7E2	1.325
21969	6220	Sisma X SLD	38.3	0	0	0	1.7E2	1.325	21970	6220	Sisma Y SLD	0	38.3	0	0	1.7E2	1.325
21971	6221	Sisma X SLV	37.3	0	0	0	1.6E2	1.325	21972	6221	Sisma Y SLV	0	37.3	0	0	1.6E2	1.325
21973	6221	Sisma X SLD	36.7	0	0	0	1.6E2	1.325	21974	6221	Sisma Y SLD	0	36.7	0	0	1.6E2	1.325
21975	6222	Sisma X SLV	25.4	0	0	0	1.1E2	1.325	21976	6222	Sisma Y SLV	0	25.4	0	0	1.1E2	1.325
21977	6222	Sisma X SLD	25	0	0	0	1.1E2	1.325	21978	6222	Sisma Y SLD	0	25	0	0	1.1E2	1.325
21979	6223	Sisma X SLV	25.6	0	0	0	113	1.325	21980	6223	Sisma Y SLV	0	25.6	0	0	113	1.325
21981	6223	Sisma X SLD	25.1	0	0	0	113	1.325	21982	6223	Sisma Y SLD	0	25.1	0	0	113	1.325
21983	6224	Sisma X SLV	40.4	0	0	0	1.8E2	1.325	21984	6224	Sisma Y SLV	0	40.4	0	0	1.8E2	1.325
21985	6224	Sisma X SLD	39.7	0	0	0	1.8E2	1.325	21986	6224	Sisma Y SLD	0	39.7	0	0	1.8E2	1.325
21987	6225	Sisma X SLV	34.9	0	0	0	1.5E2	1.325	21988	6225	Sisma Y SLV	0	34.9	0	0	1.5E2	1.325
21989	6225	Sisma X SLD	34.3	0	0	0	1.5E2	1.325	21990	6225	Sisma Y SLD	0	34.3	0	0	1.5E2	1.325
21991	6226	Sisma X SLV	27.6	0	0	0	1.2E2	1.325	21992	6226	Sisma Y SLV	0	27.6	0	0	1.2E2	1.325
21993	6226	Sisma X SLD	27.2	0	0	0	1.2E2	1.325	21994	6226	Sisma Y SLD	0	27.2	0	0	1.2E2	1.325
21995	6227	Sisma X SLV	27.6	0	0	0	1.2E2	1.325	21996	6227	Sisma Y SLV	0	27.6	0	0	1.2E2	1.325
21997	6227	Sisma X SLD	27.2	0	0	0	1.2E2	1.325	21998	6227	Sisma Y SLD	0	27.2	0	0	1.2E2	1.325
21999	6228	Sisma X SLV	35.1	0	0	0	1.6E2	1.325	22000	6228	Sisma Y SLV	0	35.1	0	0	1.6E2	1.325
22001	6228	Sisma X SLD	34.5	0	0	0	1.6E2	1.325	22002	6228	Sisma Y SLD	0	34.5	0	0	1.6E2	1.325
22003	6229	Sisma X SLV	25.6	0	0	0	113.03	1.325	22004	6229	Sisma Y SLV	0	25.6	0	0	113.03	1.325
22005	6229	Sisma X SLD	25.2	0	0	0	113.03	1.325	22006	6229	Sisma Y SLD	0	25.2	0	0	113.03	1.325
22007	6230	Sisma X SLV	17.6	0	0	0	77.711	1.325	22008	6230	Sisma Y SLV	0	17.6	0	0	77.711	1.325
22009	6230	Sisma X SLD	17.3	0	0	0	77.711	1.325	22010	6230	Sisma Y SLD	0	17.3	0	0	77.711	1.325
22011	6231	Sisma X SLV	17.6	0	0	0	77.711	1.325	22012	6231	Sisma Y SLV	0	17.6	0	0	77.711	1.325
22013	6231	Sisma X SLD	17.3	0	0	0	77.711	1.325	22014	6231	Sisma Y SLD	0	17.3	0	0	77.711	1.325
22015	6232	Sisma X SLV	25.2	0	0	0	1.1E2	1.325	22016	6232	Sisma Y SLV	0	25.2	0	0	1.1E2	1.325
22017	6232	Sisma X SLD	24.8	0	0	0	1.1E2	1.325	22018	6232	Sisma Y SLD	0	24.8	0	0	1.1E2	1.325
22019	6233	Sisma X SLV	25.6	0	0	0	1.1E2	1.325	22020	6233	Sisma Y SLV	0	25.6	0	0	1.1E2	1.325
22021	6233	Sisma X SLD	25.2	0	0	0	1.1E2	1.325	22022	6233	Sisma Y SLD	0	25.2	0	0	1.1E2	1.325
22023	6234	Sisma X SLV	17.9	0	0	0	79.179	1.325	22024	6234	Sisma Y SLV	0	17.9	0	0	79.179	1.325
22025	6234	Sisma X SLD	17.6	0	0	0	79.179	1.325	22026	6234	Sisma Y SLD	0	17.6	0	0	79.179	1.325
22027	6235	Sisma X SLV	17.9	0	0	0	79.179	1.325	22028	6235	Sisma Y SLV	0	17.9	0	0	79.179	1.325
22029	6235	Sisma X SLD	17.6	0	0	0	79.179	1.325	22030	6235	Sisma Y SLD	0	17.6	0	0	79.179	1.325
22031	6236	Sisma X SLV	25.5	0	0	0	1.1E2	1.325	22032	6236	Sisma Y SLV	0	25.5	0	0	1.1E2	1.325
22033	6236	Sisma X SLD	25.1	0	0	0	1.1E2	1.325	22034	6236	Sisma Y SLD	0	25.1	0	0	1.1E2	1.325

muratura

Indice	Nodo	Condizione	Fx	Fy	Fz	Mz	Peso	Gamma	Indice	Nodo	Condizione	Fx	Fy	Fz	Mz	Peso	Gamma
22035	6237	Sisma X SLV	36	0	0	0	1.6E2	1.325	22036	6237	Sisma Y SLV	0	36	0	0	1.6E2	1.325
22037	6237	Sisma X SLD	35.4	0	0	0	1.6E2	1.325	22038	6237	Sisma Y SLD	0	35.4	0	0	1.6E2	1.325
22039	6238	Sisma X SLV	34.4	0	0	0	1.5E2	1.325	22040	6238	Sisma Y SLV	0	34.4	0	0	1.5E2	1.325
22041	6238	Sisma X SLD	33.8	0	0	0	1.5E2	1.325	22042	6238	Sisma Y SLD	0	33.8	0	0	1.5E2	1.325
22043	6239	Sisma X SLV	34.4	0	0	0	1.5E2	1.325	22044	6239	Sisma Y SLV	0	34.4	0	0	1.5E2	1.325
22045	6239	Sisma X SLD	33.8	0	0	0	1.5E2	1.325	22046	6239	Sisma Y SLD	0	33.8	0	0	1.5E2	1.325
22047	6240	Sisma X SLV	42.6	0	0	0	188.27	1.325	22048	6240	Sisma Y SLV	0	42.6	0	0	188.27	1.325
22049	6240	Sisma X SLD	41.9	0	0	0	188.27	1.325	22050	6240	Sisma Y SLD	0	41.9	0	0	188.27	1.325
22051	6241	Sisma X SLV	35.9	0	0	0	1.6E2	1.325	22052	6241	Sisma Y SLV	0	35.9	0	0	1.6E2	1.325
22053	6241	Sisma X SLD	35.3	0	0	0	1.6E2	1.325	22054	6241	Sisma Y SLD	0	35.3	0	0	1.6E2	1.325
22055	6242	Sisma X SLV	31.5	0	0	0	1.4E2	1.325	22056	6242	Sisma Y SLV	0	31.5	0	0	1.4E2	1.325
22057	6242	Sisma X SLD	31	0	0	0	1.4E2	1.325	22058	6242	Sisma Y SLD	0	31	0	0	1.4E2	1.325
22059	6243	Sisma X SLV	48.1	0	0	0	212.58	1.325	22060	6243	Sisma Y SLV	0	48.1	0	0	212.58	1.325
22061	6243	Sisma X SLD	47.3	0	0	0	212.58	1.325	22062	6243	Sisma Y SLD	0	47.3	0	0	212.58	1.325
22063	6244	Sisma X SLV	77.1	0	0	0	3.4E2	1.325	22064	6244	Sisma Y SLV	0	77.1	0	0	3.4E2	1.325
22065	6244	Sisma X SLD	75.9	0	0	0	3.4E2	1.325	22066	6244	Sisma Y SLD	0	75.9	0	0	3.4E2	1.325
22067	6245	Sisma X SLV	23.3	0	0	0	1.0E2	1.325	22068	6245	Sisma Y SLV	0	23.3	0	0	1.0E2	1.325
22069	6245	Sisma X SLD	22.9	0	0	0	1.0E2	1.325	22070	6245	Sisma Y SLD	0	22.9	0	0	1.0E2	1.325
22071	6246	Sisma X SLV	11.8	0	0	0	52.304	1.325	22072	6246	Sisma Y SLV	0	11.8	0	0	52.304	1.325
22073	6246	Sisma X SLD	11.6	0	0	0	52.304	1.325	22074	6246	Sisma Y SLD	0	11.6	0	0	52.304	1.325
22075	6247	Sisma X SLV	11.7	0	0	0	51.555	1.325	22076	6247	Sisma Y SLV	0	11.7	0	0	51.555	1.325
22077	6247	Sisma X SLD	11.5	0	0	0	51.555	1.325	22078	6247	Sisma Y SLD	0	11.5	0	0	51.555	1.325
22079	6248	Sisma X SLV	21.1	0	0	0	93.228	1.325	22080	6248	Sisma Y SLV	0	21.1	0	0	93.228	1.325
22081	6248	Sisma X SLD	20.7	0	0	0	93.228	1.325	22082	6248	Sisma Y SLD	0	20.7	0	0	93.228	1.325
22083	6249	Sisma X SLV	37.5	0	0	0	1.7E2	1.325	22084	6249	Sisma Y SLV	0	37.5	0	0	1.7E2	1.325
22085	6249	Sisma X SLD	36.9	0	0	0	1.7E2	1.325	22086	6249	Sisma Y SLD	0	36.9	0	0	1.7E2	1.325
22087	6250	Sisma X SLV	43.2	0	0	0	1.9E2	1.325	22088	6250	Sisma Y SLV	0	43.2	0	0	1.9E2	1.325
22089	6250	Sisma X SLD	42.5	0	0	0	1.9E2	1.325	22090	6250	Sisma Y SLD	0	42.5	0	0	1.9E2	1.325
22091	6251	Sisma X SLV	21.3	0	0	0	94.142	1.325	22092	6251	Sisma Y SLV	0	21.3	0	0	94.142	1.325
22093	6251	Sisma X SLD	20.9	0	0	0	94.142	1.325	22094	6251	Sisma Y SLD	0	20.9	0	0	94.142	1.325
22095	6252	Sisma X SLV	21.3	0	0	0	94.142	1.325	22096	6252	Sisma Y SLV	0	21.3	0	0	94.142	1.325
22097	6252	Sisma X SLD	20.9	0	0	0	94.142	1.325	22098	6252	Sisma Y SLD	0	20.9	0	0	94.142	1.325
22099	6253	Sisma X SLV	28.8	0	0	0	1.3E2	1.325	22100	6253	Sisma Y SLV	0	28.8	0	0	1.3E2	1.325
22101	6253	Sisma X SLD	28.4	0	0	0	1.3E2	1.325	22102	6253	Sisma Y SLD	0	28.4	0	0	1.3E2	1.325
22103	6254	Sisma X SLV	24.6	0	0	0	1.1E2	1.325	22104	6254	Sisma Y SLV	0	24.6	0	0	1.1E2	1.325
22105	6254	Sisma X SLD	24.2	0	0	0	1.1E2	1.325	22106	6254	Sisma Y SLD	0	24.2	0	0	1.1E2	1.325
22107	6255	Sisma X SLV	18.4	0	0	0	81.303	1.325	22108	6255	Sisma Y SLV	0	18.4	0	0	81.303	1.325
22109	6255	Sisma X SLD	18.1	0	0	0	81.303	1.325	22110	6255	Sisma Y SLD	0	18.1	0	0	81.303	1.325
22111	6256	Sisma X SLV	18.4	0	0	0	81.303	1.325	22112	6256	Sisma Y SLV	0	18.4	0	0	81.303	1.325
22113	6256	Sisma X SLD	18.1	0	0	0	81.303	1.325	22114	6256	Sisma Y SLD	0	18.1	0	0	81.303	1.325
22115	6257	Sisma X SLV	24.5	0	0	0	1.1E2	1.325	22116	6257	Sisma Y SLV	0	24.5	0	0	1.1E2	1.325
22117	6257	Sisma X SLD	24.1	0	0	0	1.1E2	1.325	22118	6257	Sisma Y SLD	0	24.1	0	0	1.1E2	1.325
22119	6258	Sisma X SLV	18.8	0	0	0	83.16	1.325	22120	6258	Sisma Y SLV	0	18.8	0	0	83.16	1.325
22121	6258	Sisma X SLD	18.5	0	0	0	83.16	1.325	22122	6258	Sisma Y SLD	0	18.5	0	0	83.16	1.325
22123	6259	Sisma X SLV	18.8	0	0	0	83.16	1.325	22124	6259	Sisma Y SLV	0	18.8	0	0	83.16	1.325
22125	6259	Sisma X SLD	18.5	0	0	0	83.16	1.325	22126	6259	Sisma Y SLD	0	18.5	0	0	83.16	1.325
22127	6260	Sisma X SLV	29.8	0	0	0	1.3E2	1.325	22128	6260	Sisma Y SLV	0	29.8	0	0	1.3E2	1.325
22129	6260	Sisma X SLD	29.3	0	0	0	1.3E2	1.325	22130	6260	Sisma Y SLD	0	29.3	0	0	1.3E2	1.325
22131	6261	Sisma X SLV	24.5	0	0	0	1.1E2	1.325	22132	6261	Sisma Y SLV	0	24.5	0	0	1.1E2	1.325
22133	6261	Sisma X SLD	24.1	0	0	0	1.1E2	1.325	22134	6261	Sisma Y SLD	0	24.1	0	0	1.1E2	1.325
22135	6262	Sisma X SLV	20.4	0	0	0	90.245	1.325	22136	6262	Sisma Y SLV	0	20.4	0	0	90.245	1.325
22137	6262	Sisma X SLD	20.1	0	0	0	90.245	1.325	22138	6262	Sisma Y SLD	0	20.1	0	0	90.245	1.325
22139	6263	Sisma X SLV	20.4	0	0	0	90.245	1.325	22140	6263	Sisma Y SLV	0	20.4	0	0	90.245	1.325
22141	6263	Sisma X SLD	20.1	0	0	0	90.245	1.325	22142	6263	Sisma Y SLD	0	20.1	0	0	90.245	1.325
22143	6264	Sisma X SLV	53.7	0	0	0	2.4E2	1.325	22144	6264	Sisma Y SLV	0	53.7	0	0	2.4E2	1.325
22145	6264	Sisma X SLD	52.8	0	0	0	2.4E2	1.325	22146	6264	Sisma Y SLD	0	52.8	0	0	2.4E2	1.325
22147	6265	Sisma X SLV	38.2	0	0	0	1.7E2	1.325	22148	6265	Sisma Y SLV	0	38.2	0	0	1.7E2	1.325
22149	6265	Sisma X SLD	37.6	0	0	0	1.7E2	1.325	22150	6265	Sisma Y SLD	0	37.6	0	0	1.7E2	1.325
22151	6266	Sisma X SLV	38.9	0	0	0	1.7E2	1.325	22152	6266	Sisma Y SLV	0	38.9	0	0	1.7E2	1.325
22153	6266	Sisma X SLD	38.3	0	0	0	1.7E2	1.325	22154	6266	Sisma Y SLD	0	38.3	0	0	1.7E2	1.325
22155	6267	Sisma X SLV	38.9	0	0	0	1.7E2	1.325	22156	6267	Sisma Y SLV	0	38.9	0	0	1.7E2	1.325
22157	6267	Sisma X SLD	38.3	0	0	0	1.7E2	1.325	22158	6267	Sisma Y SLD	0	38.3	0	0	1.7E2	1.325
22159	6268	Sisma X SLV	68.1	0	0	0	3.0E2	1.325	22160	6268	Sisma Y SLV	0	68.1	0	0	3.0E2	1.325
22161	6268	Sisma X SLD	67	0	0	0	3.0E2	1.325	22162	6268	Sisma Y SLD	0	67	0	0	3.0E2	1.325
22163	6269	Sisma X SLV	70.8	0	0	0	3.1E2	1.325	22164	6269	Sisma Y SLV	0	70.8	0	0	3.1E2	1.325
22165	6269	Sisma X SLD	69.7	0	0	0	3.1E2	1.325	22166	6269	Sisma Y SLD	0	69.7	0	0	3.1E2	1.325
22167	6270	Sisma X SLV	70.3	0	0	0	3.1E2	1.325	22168	6270	Sisma Y SLV	0	70.3	0	0	3.1E2	1.325
22169	6270	Sisma X SLD	69.2	0	0	0	3.1E2	1.325	22170	6270	Sisma Y SLD	0	69.2	0	0	3.1E2	1.325
22171	6271	Sisma X SLV	80.3	0	0	0	3.6E2	1.325	22172	6271	Sisma Y SLV	0	80.3	0	0	3.6E2	1.325
22173	6271	Sisma X SLD	79.1	0	0	0	3.6E2	1.325	22174	6271	Sisma Y SLD	0	79.1	0	0	3.6E2	1.325
22175	6272	Sisma X SLV	41.6	0	0	0	1.8E2	1.325	22176	6272	Sisma Y SLV	0	41.6	0	0	1.8E2	1.325
22177	6272	Sisma X SLD	40.9	0	0	0	1.8E2	1.325	22178	6272	Sisma Y SLD	0	40.9	0	0	1.8E2	1.325
22179	6273	Sisma X SLV	41.1	0	0	0	1.8E2	1.325	22180	6273	Sisma Y SLV	0	41.1	0	0	1.8E2	1.325
22181	6273	Sisma X SLD	40.5	0	0	0	1.8E2	1.325	22182	6273	Sisma Y SLD	0	40.5	0	0	1.8E2	1.325
22183	6274	Sisma X SLV	35.2	0	0	0	1.6E2	1.325	22184	6274	Sisma Y SLV	0	35.2	0	0	1.6E2	1.325
22185	6274	Sisma X SLD	34.6	0	0	0	1.6E2	1.325	22186	6274	Sisma Y SLD	0	34.6	0	0	1.6E2	1.325
22187	6275	Sisma X SLV	35.1	0	0	0	1.6E2	1.325	22188	6275	Sisma Y SLV	0	35.1	0	0	1.6E2	1.325
22189	6275	Sisma X SLD	34.6	0	0	0	1.6E2	1.325	22190	6275	Sisma Y SLD	0	34.6	0	0	1.6E2	1.325
22191	6276	Sisma X SLV	25.9	0	0	0	1.1E2	1.325	22192	6276	Sisma Y SLV	0	25.9	0	0	1.1E2	1.325
22193	6276	Sisma X SLD	25.5	0	0	0	1.1E2	1.325	22194	6276	Sisma Y SLD	0	25.5	0	0	1.1E2	1.325
22195	6277	Sisma X SLV	26.2	0	0	0	1.2E2	1.325	22196	6277	Sisma Y SLV	0	26.2	0	0	1.2E2	1.325
22197	6277	Sisma X SLD	25.8	0	0	0	1.2E2	1.325	22198	6277	Sisma Y SLD	0	25.8	0	0	1.2E2	1.325
22199	6278	Sisma X SLV	17.7	0	0	0	78.37	1.325	22200	6278	Sisma Y SLV	0	17.7	0	0	78.37	1.325
22201	6278	Sisma X SLD	17.4	0	0	0	78.37	1.325	22202	6278	Sisma Y SLD	0	17.4	0	0	78.37	1.325
22203	6279	Sisma X SLV	17.6	0	0	0	77.875	1.325	22204	6279	Sisma Y SLV	0	17.6	0	0	77.875	1.325
22205	6279	Sisma X SLD	17.3	0	0	0	77.875	1.325	22206	6279	Sisma Y SLD	0	17.3	0	0	77.875	1.325
22207	6280	Sisma X SLV	25.8	0	0	0	1.1E2	1.325	22208	6280	Sisma Y SLV	0	25.8	0	0	1.1E2	1.325
22209	6280	Sisma X SLD	25.4	0	0	0	1.1E2	1.325	22210	6280	Sisma Y SLD	0	25.4	0	0	1.1E2	1.325
22211	6281	Sisma X SLV	26.1	0	0	0	1.2E2	1.325	22212	6281	Sisma Y SLV	0	26.1	0	0	1.2E2	1.325
22213	6281	Sisma X SLD	25.7	0	0	0	1.2E2	1.325	22214	6281	Sisma Y SLD	0	25.7	0	0	1.2E2	1.325
22215	6282	Sisma X SLV	17	0	0	0	74.989	1.325	22216	6282	Sisma Y SLV	0	17	0	0	74.989	1.325
22217	6282	Sisma X SLD	16.7	0	0	0	74.989	1.325	22218	6282	Sisma Y SLD	0	16.7	0	0	74.989	1.325
22219	6283	Sisma X SLV	16.8	0	0	0	74.225	1.325	22220	6283	Sisma Y SLV	0	16.8	0	0	74.225	1.325
22221	6283	Sisma X SLD	16.5	0	0	0	74.225	1.325	22222	6283	Sisma Y SLD	0	16.5	0	0	74.225	1.325
22223	6284	Sisma X SLV	40.3	0	0	0	1.8E2	1.325	22224	6284	Sisma Y SLV	0	40.3	0	0	1.8E2	1.325
22225	6284	Sisma X SLD	39.6	0	0	0	1.8E2	1.325	22226	6284	Sisma Y SLD	0	39.6	0	0	1.8E2	1.325
22227	6285	Sisma X SLV	33.1	0	0	0	146.33	1.325	22228	6285	Sisma Y SLV	0	33.1	0	0	146.33	1.325
22229	6285	Sisma X SLD	32.6	0	0	0	146.33	1.325	22230	6285	Sisma Y SLD	0	32.6	0	0	146.33	1.325
22231	6286	Sisma X SLV	32.9	0	0	0	1.5E2	1.325	22232	6286	Sisma Y SLV	0	32.9	0	0	1.5E2	1.325
22233	6286	Sisma X SLD	32.3	0	0	0	1.5E2	1.325	22234	6286	Sisma Y SLD	0	32.3	0	0	1.5E2	1.325
22235	6287	Sisma X SLV	40.6	0	0	0	1.8E2	1.325	22236	6287	Sisma Y SLV	0	40.6	0	0	1.8E2	1.325

Indice	Nodo	Condizione	Fx	Fy	Fz	Mz	Peso	Gamma	Indice	Nodo	Condizione	Fx	Fy	Fz	Mz	Peso	Gamma
22237	6287	Sisma X SLD	40	0	0	0	1.8E2	1.325	22238	6287	Sisma Y SLD	0	40	0	0	1.8E2	1.325
22239	6288	Sisma X SLV	30.6	0	0	0	1.4E2	1.325	22240	6288	Sisma Y SLV	0	30.6	0	0	1.4E2	1.325
22241	6288	Sisma X SLD	30.1	0	0	0	1.4E2	1.325	22242	6288	Sisma Y SLD	0	30.1	0	0	1.4E2	1.325
22243	6289	Sisma X SLV	29.5	0	0	0	1.3E2	1.325	22244	6289	Sisma Y SLV	0	29.5	0	0	1.3E2	1.325
22245	6289	Sisma X SLD	29	0	0	0	1.3E2	1.325	22246	6289	Sisma Y SLD	0	29	0	0	1.3E2	1.325
22247	6290	Sisma X SLV	42.8	0	0	0	1.9E2	1.325	22248	6290	Sisma Y SLV	0	42.8	0	0	1.9E2	1.325
22249	6290	Sisma X SLD	42.1	0	0	0	1.9E2	1.325	22250	6290	Sisma Y SLD	0	42.1	0	0	1.9E2	1.325
22251	6291	Sisma X SLV	90.2	0	0	0	398.97	1.325	22252	6291	Sisma Y SLV	0	90.2	0	0	398.97	1.325
22253	6291	Sisma X SLD	88.8	0	0	0	398.97	1.325	22254	6291	Sisma Y SLD	0	88.8	0	0	398.97	1.325
22255	6292	Sisma X SLV	54.2	0	0	0	2.4E2	1.325	22256	6292	Sisma Y SLV	0	54.2	0	0	2.4E2	1.325
22257	6292	Sisma X SLD	53.3	0	0	0	2.4E2	1.325	22258	6292	Sisma Y SLD	0	53.3	0	0	2.4E2	1.325
22259	6293	Sisma X SLV	30	0	0	0	1.3E2	1.325	22260	6293	Sisma Y SLV	0	30	0	0	1.3E2	1.325
22261	6293	Sisma X SLD	29.5	0	0	0	1.3E2	1.325	22262	6293	Sisma Y SLD	0	29.5	0	0	1.3E2	1.325
22263	6294	Sisma X SLV	29.7	0	0	0	1.3E2	1.325	22264	6294	Sisma Y SLV	0	29.7	0	0	1.3E2	1.325
22265	6294	Sisma X SLD	29.2	0	0	0	1.3E2	1.325	22266	6294	Sisma Y SLD	0	29.2	0	0	1.3E2	1.325
22267	6295	Sisma X SLV	28.8	0	0	0	1.3E2	1.325	22268	6295	Sisma Y SLV	0	28.8	0	0	1.3E2	1.325
22269	6295	Sisma X SLD	28.3	0	0	0	1.3E2	1.325	22270	6295	Sisma Y SLD	0	28.3	0	0	1.3E2	1.325
22271	6296	Sisma X SLV	30	0	0	0	1.3E2	1.325	22272	6296	Sisma Y SLV	0	30	0	0	1.3E2	1.325
22273	6296	Sisma X SLD	29.5	0	0	0	1.3E2	1.325	22274	6296	Sisma Y SLD	0	29.5	0	0	1.3E2	1.325
22275	6297	Sisma X SLV	25.3	0	0	0	111.96	1.325	22276	6297	Sisma Y SLV	0	25.3	0	0	111.96	1.325
22277	6297	Sisma X SLD	24.9	0	0	0	111.96	1.325	22278	6297	Sisma Y SLD	0	24.9	0	0	111.96	1.325
22279	6298	Sisma X SLV	36.5	0	0	0	1.6E2	1.325	22280	6298	Sisma Y SLV	0	36.5	0	0	1.6E2	1.325
22281	6298	Sisma X SLD	35.9	0	0	0	1.6E2	1.325	22282	6298	Sisma Y SLD	0	35.9	0	0	1.6E2	1.325
22283	6299	Sisma X SLV	30.8	0	0	0	1.4E2	1.325	22284	6299	Sisma Y SLV	0	30.8	0	0	1.4E2	1.325
22285	6299	Sisma X SLD	30.3	0	0	0	1.4E2	1.325	22286	6299	Sisma Y SLD	0	30.3	0	0	1.4E2	1.325
22287	6300	Sisma X SLV	39.5	0	0	0	1.7E2	1.325	22288	6300	Sisma Y SLV	0	39.5	0	0	1.7E2	1.325
22289	6300	Sisma X SLD	38.8	0	0	0	1.7E2	1.325	22290	6300	Sisma Y SLD	0	38.8	0	0	1.7E2	1.325
22291	6301	Sisma X SLV	33.9	0	0	0	1.5E2	1.325	22292	6301	Sisma Y SLV	0	33.9	0	0	1.5E2	1.325
22293	6301	Sisma X SLD	33.4	0	0	0	1.5E2	1.325	22294	6301	Sisma Y SLD	0	33.4	0	0	1.5E2	1.325
22295	6302	Sisma X SLV	33.9	0	0	0	1.5E2	1.326	22296	6302	Sisma Y SLV	0	33.9	0	0	1.5E2	1.326
22297	6302	Sisma X SLD	33.3	0	0	0	1.5E2	1.326	22298	6302	Sisma Y SLD	0	33.3	0	0	1.5E2	1.326
22299	6303	Sisma X SLV	33.8	0	0	0	1.5E2	1.326	22300	6303	Sisma Y SLV	0	33.8	0	0	1.5E2	1.326
22301	6303	Sisma X SLD	33.2	0	0	0	1.5E2	1.326	22302	6303	Sisma Y SLD	0	33.2	0	0	1.5E2	1.326
22303	6304	Sisma X SLV	33.6	0	0	0	1.5E2	1.327	22304	6304	Sisma Y SLV	0	33.6	0	0	1.5E2	1.327
22305	6304	Sisma X SLD	33.1	0	0	0	1.5E2	1.327	22306	6304	Sisma Y SLD	0	33.1	0	0	1.5E2	1.327
22307	6305	Sisma X SLV	33.6	0	0	0	148.52	1.327	22308	6305	Sisma Y SLV	0	33.6	0	0	148.52	1.327
22309	6305	Sisma X SLD	33.1	0	0	0	148.52	1.327	22310	6305	Sisma Y SLD	0	33.1	0	0	148.52	1.327
22311	6306	Sisma X SLV	30	0	0	0	1.3E2	1.327	22312	6306	Sisma Y SLV	0	30	0	0	1.3E2	1.327
22313	6306	Sisma X SLD	29.6	0	0	0	1.3E2	1.327	22314	6306	Sisma Y SLD	0	29.6	0	0	1.3E2	1.327
22315	6307	Sisma X SLV	36.3	0	0	0	1.6E2	1.327	22316	6307	Sisma Y SLV	0	36.3	0	0	1.6E2	1.327
22317	6307	Sisma X SLD	35.8	0	0	0	1.6E2	1.327	22318	6307	Sisma Y SLD	0	35.8	0	0	1.6E2	1.327
22319	6308	Sisma X SLV	36.3	0	0	0	1.6E2	1.327	22320	6308	Sisma Y SLV	0	36.3	0	0	1.6E2	1.327
22321	6308	Sisma X SLD	35.8	0	0	0	1.6E2	1.327	22322	6308	Sisma Y SLD	0	35.8	0	0	1.6E2	1.327
22323	6309	Sisma X SLV	52.7	0	0	0	2.3E2	1.328	22324	6309	Sisma Y SLV	0	52.7	0	0	2.3E2	1.328
22325	6309	Sisma X SLD	51.9	0	0	0	2.3E2	1.328	22326	6309	Sisma Y SLD	0	51.9	0	0	2.3E2	1.328
22327	6310	Sisma X SLV	52.7	0	0	0	2.3E2	1.328	22328	6310	Sisma Y SLV	0	52.7	0	0	2.3E2	1.328
22329	6310	Sisma X SLD	51.9	0	0	0	2.3E2	1.328	22330	6310	Sisma Y SLD	0	51.9	0	0	2.3E2	1.328
22331	6311	Sisma X SLV	33.4	0	0	0	1.5E2	1.328	22332	6311	Sisma Y SLV	0	33.4	0	0	1.5E2	1.328
22333	6311	Sisma X SLD	32.8	0	0	0	1.5E2	1.328	22334	6311	Sisma Y SLD	0	32.8	0	0	1.5E2	1.328
22335	6312	Sisma X SLV	26.5	0	0	0	116.72	1.328	22336	6312	Sisma Y SLV	0	26.5	0	0	116.72	1.328
22337	6312	Sisma X SLD	26	0	0	0	116.72	1.328	22338	6312	Sisma Y SLD	0	26	0	0	116.72	1.328
22339	6313	Sisma X SLV	26.5	0	0	0	116.72	1.328	22340	6313	Sisma Y SLV	0	26.5	0	0	116.72	1.328
22341	6313	Sisma X SLD	26	0	0	0	116.72	1.328	22342	6313	Sisma Y SLD	0	26	0	0	116.72	1.328
22343	6314	Sisma X SLV	29.7	0	0	0	131.05	1.329	22344	6314	Sisma Y SLV	0	29.7	0	0	131.05	1.329
22345	6314	Sisma X SLD	29.2	0	0	0	131.05	1.329	22346	6314	Sisma Y SLD	0	29.2	0	0	131.05	1.329
22347	6315	Sisma X SLV	32.9	0	0	0	145.2	1.329	22348	6315	Sisma Y SLV	0	32.9	0	0	145.2	1.329
22349	6315	Sisma X SLD	32.4	0	0	0	145.2	1.329	22350	6315	Sisma Y SLD	0	32.4	0	0	145.2	1.329
22351	6316	Sisma X SLV	54.7	0	0	0	241.27	1.329	22352	6316	Sisma Y SLV	0	54.7	0	0	241.27	1.329
22353	6316	Sisma X SLD	53.9	0	0	0	241.27	1.329	22354	6316	Sisma Y SLD	0	53.9	0	0	241.27	1.329
22355	6317	Sisma X SLV	54.8	0	0	0	2.4E2	1.329	22356	6317	Sisma Y SLV	0	54.8	0	0	2.4E2	1.329
22357	6317	Sisma X SLD	53.9	0	0	0	2.4E2	1.329	22358	6317	Sisma Y SLD	0	53.9	0	0	2.4E2	1.329
22359	6318	Sisma X SLV	35.4	0	0	0	1.6E2	1.33	22360	6318	Sisma Y SLV	0	35.4	0	0	1.6E2	1.33
22361	6318	Sisma X SLD	34.9	0	0	0	1.6E2	1.33	22362	6318	Sisma Y SLD	0	34.9	0	0	1.6E2	1.33
22363	6319	Sisma X SLV	32.2	0	0	0	141.85	1.33	22364	6319	Sisma Y SLV	0	32.2	0	0	141.85	1.33
22365	6319	Sisma X SLD	31.7	0	0	0	141.85	1.33	22366	6319	Sisma Y SLD	0	31.7	0	0	141.85	1.33
22367	6320	Sisma X SLV	33	0	0	0	145.49	1.33	22368	6320	Sisma Y SLV	0	33	0	0	145.49	1.33
22369	6320	Sisma X SLD	32.5	0	0	0	145.49	1.33	22370	6320	Sisma Y SLD	0	32.5	0	0	145.49	1.33
22371	6321	Sisma X SLV	33	0	0	0	145.49	1.33	22372	6321	Sisma Y SLV	0	33	0	0	145.49	1.33
22373	6321	Sisma X SLD	32.5	0	0	0	145.49	1.33	22374	6321	Sisma Y SLD	0	32.5	0	0	145.49	1.33
22375	6322	Sisma X SLV	29.5	0	0	0	1.3E2	1.33	22376	6322	Sisma Y SLV	0	29.5	0	0	1.3E2	1.33
22377	6322	Sisma X SLD	29	0	0	0	1.3E2	1.33	22378	6322	Sisma Y SLD	0	29	0	0	1.3E2	1.33
22379	6323	Sisma X SLV	24.9	0	0	0	1.1E2	1.33	22380	6323	Sisma Y SLV	0	24.9	0	0	1.1E2	1.33
22381	6323	Sisma X SLD	24.5	0	0	0	1.1E2	1.33	22382	6323	Sisma Y SLD	0	24.5	0	0	1.1E2	1.33
22383	6324	Sisma X SLV	24.9	0	0	0	1.1E2	1.33	22384	6324	Sisma Y SLV	0	24.9	0	0	1.1E2	1.33
22385	6324	Sisma X SLD	24.5	0	0	0	1.1E2	1.33	22386	6324	Sisma Y SLD	0	24.5	0	0	1.1E2	1.33
22387	6325	Sisma X SLV	30.3	0	0	0	1.3E2	1.33	22388	6325	Sisma Y SLV	0	30.3	0	0	1.3E2	1.33
22389	6325	Sisma X SLD	29.8	0	0	0	1.3E2	1.33	22390	6325	Sisma Y SLD	0	29.8	0	0	1.3E2	1.33
22391	6326	Sisma X SLV	30.3	0	0	0	1.3E2	1.33	22392	6326	Sisma Y SLV	0	30.3	0	0	1.3E2	1.33
22393	6326	Sisma X SLD	29.8	0	0	0	1.3E2	1.33	22394	6326	Sisma Y SLD	0	29.8	0	0	1.3E2	1.33
22395	6327	Sisma X SLV	33.3	0	0	0	1.5E2	1.331	22396	6327	Sisma Y SLV	0	33.3	0	0	1.5E2	1.331
22397	6327	Sisma X SLD	32.8	0	0	0	1.5E2	1.331	22398	6327	Sisma Y SLD	0	32.8	0	0	1.5E2	1.331
22399	6328	Sisma X SLV	31.1	0	0	0	137.06	1.331	22400	6328	Sisma Y SLV	0	31.1	0	0	137.06	1.331
22401	6328	Sisma X SLD	30.6	0	0	0	137.06	1.331	22402	6328	Sisma Y SLD	0	30.6	0	0	137.06	1.331
22403	6329	Sisma X SLV	29.7	0	0	0	1.3E2	1.331	22404	6329	Sisma Y SLV	0	29.7	0	0	1.3E2	1.331
22405	6329	Sisma X SLD	29.2	0	0	0	1.3E2	1.331	22406	6329	Sisma Y SLD	0	29.2	0	0	1.3E2	1.331
22407	6330	Sisma X SLV	30.2	0	0	0	1.3E2	1.331	22408	6330	Sisma Y SLV	0	30.2	0	0	1.3E2	1.331
22409	6330	Sisma X SLD	29.7	0	0	0	1.3E2	1.331	22410	6330	Sisma Y SLD	0	29.7	0	0	1.3E2	1.331
22411	6331	Sisma X SLV	52.7	0	0	0	2.3E2	1.332	22412	6331	Sisma Y SLV	0	52.7	0	0	2.3E2	1.332
22413	6331	Sisma X SLD	51.9	0	0	0	2.3E2	1.332	22414	6331	Sisma Y SLD	0	51.9	0	0	2.3E2	1.332
22415	6332	Sisma X SLV	28.2	0	0	0	1.2E2	1.332	22416	6332	Sisma Y SLV	0	28.2	0	0	1.2E2	1.332
22417	6332	Sisma X SLD	27.7	0	0	0	1.2E2	1.332	22418	6332	Sisma Y SLD	0	27.7	0	0	1.2E2	1.332
22419	6333	Sisma X SLV	52.2	0	0	0	2.3E2	1.333	22420	6333	Sisma Y SLV	0	52.2	0	0	2.3E2	1.333
22421	6333	Sisma X SLD	51.4	0	0	0	2.3E2	1.333	22422	6333	Sisma Y SLD	0	51.4	0	0	2.3E2	1.333
22423	6334	Sisma X SLV	52.2	0	0	0	2.3E2	1.333	22424	6334	Sisma Y SLV	0	52.2	0	0	2.3E2	1.333
22425	6334	Sisma X SLD	51.4	0	0	0	2.3E2	1.333	22426	6334	Sisma Y SLD	0	51.4	0	0	2.3E2	1.333
22427	6335	Sisma X SLV	54.1	0	0	0	2.4E2	1.334	22428	6335	Sisma Y SLV	0	54.1	0	0	2.4E2	1.334
22429	6335	Sisma X SLD	53.3	0	0	0	2.4E2	1.334	22430	6335	Sisma Y SLD	0	53.3	0	0	2.4E2	1.334
22431	6336	Sisma X SLV	54.2	0	0	0	2.4E2	1.334	22432	6336	Sisma Y SLV	0	54.2	0	0	2.4E2	1.334
22433	6336	Sisma X SLD	53.3	0	0	0	2.4E2	1.334	22434	6336	Sisma Y SLD	0	53.3	0	0	2.4E2	1.334
22435	6337	Sisma X SLV	32.9	0	0	0	1.4E2	1.335	22436	6337	Sisma Y SLV	0	32.9	0	0	1.4E2	1.335
22437	6337	Sisma X SLD	32.4	0	0	0	1.4E2	1.335	22438	6337	Sisma Y SLD	0	32.4	0	0	1.4E2	1.335
22439	6338	Sisma X SLV	23.7	0	0	0	1.0E2	1.336	22440	6338	Sisma Y SLV	0	23.7	0	0	1.0E2	1.336
22441	6338	Sisma X SLD	23.3	0	0	0	1.0E2	1.336	22442	6338	Sisma Y SLD	0	23.3	0	0	1.0E2	1.336
22443	6339	Sisma X SLV	23.7	0	0	0	1.0E2	1.336	22444	6339	Sisma Y SLV	0	23.7	0	0	1.0E2	1.336

muratura

Indice	Nodo	Condizione	Fx	Fy	Fz	Mz	Peso	Gamma	Indice	Nodo	Condizione	Fx	Fy	Fz	Mz	Peso	Gamma
22445	6339	Sisma X SLD	23.3	0	0	0	1.0E2	1.336	22446	6339	Sisma Y SLD	0	23.3	0	0	1.0E2	1.336
22447	6340	Sisma X SLV	44.6	0	0	0	2.0E2	1.337	22448	6340	Sisma Y SLV	0	44.6	0	0	2.0E2	1.337
22449	6340	Sisma X SLD	43.9	0	0	0	2.0E2	1.337	22450	6340	Sisma Y SLD	0	43.9	0	0	2.0E2	1.337
22451	6341	Sisma X SLV	44.6	0	0	0	2.0E2	1.337	22452	6341	Sisma Y SLV	0	44.6	0	0	2.0E2	1.337
22453	6341	Sisma X SLD	43.9	0	0	0	2.0E2	1.337	22454	6341	Sisma Y SLD	0	43.9	0	0	2.0E2	1.337
22455	6342	Sisma X SLV	34.8	0	0	0	1.5E2	1.337	22456	6342	Sisma Y SLV	0	34.8	0	0	1.5E2	1.337
22457	6342	Sisma X SLD	34.3	0	0	0	1.5E2	1.337	22458	6342	Sisma Y SLD	0	34.3	0	0	1.5E2	1.337
22459	6343	Sisma X SLV	50.9	0	0	0	222.84	1.339	22460	6343	Sisma Y SLV	0	50.9	0	0	222.84	1.339
22461	6343	Sisma X SLD	50.1	0	0	0	222.84	1.339	22462	6343	Sisma Y SLD	0	50.1	0	0	222.84	1.339
22463	6344	Sisma X SLV	51.6	0	0	0	2.3E2	1.339	22464	6344	Sisma Y SLV	0	51.6	0	0	2.3E2	1.339
22465	6344	Sisma X SLD	50.8	0	0	0	2.3E2	1.339	22466	6344	Sisma Y SLD	0	50.8	0	0	2.3E2	1.339
22467	6345	Sisma X SLV	51.6	0	0	0	2.3E2	1.339	22468	6345	Sisma Y SLV	0	51.6	0	0	2.3E2	1.339
22469	6345	Sisma X SLD	50.8	0	0	0	2.3E2	1.339	22470	6345	Sisma Y SLD	0	50.8	0	0	2.3E2	1.339
22471	6346	Sisma X SLV	53.3	0	0	0	232.95	1.34	22472	6346	Sisma Y SLV	0	53.3	0	0	232.95	1.34
22473	6346	Sisma X SLD	52.4	0	0	0	232.95	1.34	22474	6346	Sisma Y SLD	0	52.4	0	0	232.95	1.34
22475	6347	Sisma X SLV	53.3	0	0	0	2.3E2	1.341	22476	6347	Sisma Y SLV	0	53.3	0	0	2.3E2	1.341
22477	6347	Sisma X SLD	52.5	0	0	0	2.3E2	1.341	22478	6347	Sisma Y SLD	0	52.5	0	0	2.3E2	1.341
22479	6348	Sisma X SLV	32.3	0	0	0	1.4E2	1.341	22480	6348	Sisma Y SLV	0	32.3	0	0	1.4E2	1.341
22481	6348	Sisma X SLD	31.8	0	0	0	1.4E2	1.341	22482	6348	Sisma Y SLD	0	31.8	0	0	1.4E2	1.341
22483	6349	Sisma X SLV	27.5	0	0	0	1.2E2	1.342	22484	6349	Sisma Y SLV	0	27.5	0	0	1.2E2	1.342
22485	6349	Sisma X SLD	27.1	0	0	0	1.2E2	1.342	22486	6349	Sisma Y SLD	0	27.1	0	0	1.2E2	1.342
22487	6350	Sisma X SLV	54.7	0	0	0	2.4E2	1.343	22488	6350	Sisma Y SLV	0	54.7	0	0	2.4E2	1.343
22489	6350	Sisma X SLD	53.8	0	0	0	2.4E2	1.343	22490	6350	Sisma Y SLD	0	53.8	0	0	2.4E2	1.343
22491	6351	Sisma X SLV	48.4	0	0	0	2.1E2	1.343	22492	6351	Sisma Y SLV	0	48.4	0	0	2.1E2	1.343
22493	6351	Sisma X SLD	47.6	0	0	0	2.1E2	1.343	22494	6351	Sisma Y SLD	0	47.6	0	0	2.1E2	1.343
22495	6352	Sisma X SLV	48.5	0	0	0	2.1E2	1.345	22496	6352	Sisma Y SLV	0	48.5	0	0	2.1E2	1.345
22497	6352	Sisma X SLD	47.8	0	0	0	2.1E2	1.345	22498	6352	Sisma Y SLD	0	47.8	0	0	2.1E2	1.345
22499	6353	Sisma X SLV	33.9	0	0	0	1.5E2	1.346	22500	6353	Sisma Y SLV	0	33.9	0	0	1.5E2	1.346
22501	6353	Sisma X SLD	33.3	0	0	0	1.5E2	1.346	22502	6353	Sisma Y SLD	0	33.3	0	0	1.5E2	1.346
22503	6354	Sisma X SLV	48.7	0	0	0	2.1E2	1.347	22504	6354	Sisma Y SLV	0	48.7	0	0	2.1E2	1.347
22505	6354	Sisma X SLD	47.9	0	0	0	2.1E2	1.347	22506	6354	Sisma Y SLD	0	47.9	0	0	2.1E2	1.347
22507	6355	Sisma X SLV	50.3	0	0	0	2.2E2	1.347	22508	6355	Sisma Y SLV	0	50.3	0	0	2.2E2	1.347
22509	6355	Sisma X SLD	49.5	0	0	0	2.2E2	1.347	22510	6355	Sisma Y SLD	0	49.5	0	0	2.2E2	1.347
22511	6356	Sisma X SLV	50.3	0	0	0	2.2E2	1.347	22512	6356	Sisma Y SLV	0	50.3	0	0	2.2E2	1.347
22513	6356	Sisma X SLD	49.5	0	0	0	2.2E2	1.347	22514	6356	Sisma Y SLD	0	49.5	0	0	2.2E2	1.347
22515	6357	Sisma X SLV	51.7	0	0	0	2.2E2	1.348	22516	6357	Sisma Y SLV	0	51.7	0	0	2.2E2	1.348
22517	6357	Sisma X SLD	50.9	0	0	0	2.2E2	1.348	22518	6357	Sisma Y SLD	0	50.9	0	0	2.2E2	1.348
22519	6358	Sisma X SLV	51.8	0	0	0	2.3E2	1.348	22520	6358	Sisma Y SLV	0	51.8	0	0	2.3E2	1.348
22521	6358	Sisma X SLD	51	0	0	0	2.3E2	1.348	22522	6358	Sisma Y SLD	0	51	0	0	2.3E2	1.348
22523	6359	Sisma X SLV	31.3	0	0	0	1.4E2	1.348	22524	6359	Sisma Y SLV	0	31.3	0	0	1.4E2	1.348
22525	6359	Sisma X SLD	30.8	0	0	0	1.4E2	1.348	22526	6359	Sisma Y SLD	0	30.8	0	0	1.4E2	1.348
22527	6360	Sisma X SLV	40.2	0	0	0	174.35	1.351	22528	6360	Sisma Y SLV	0	40.2	0	0	174.35	1.351
22529	6360	Sisma X SLD	39.6	0	0	0	174.35	1.351	22530	6360	Sisma Y SLD	0	39.6	0	0	174.35	1.351
22531	6361	Sisma X SLV	40.2	0	0	0	174.35	1.351	22532	6361	Sisma Y SLV	0	40.2	0	0	174.35	1.351
22533	6361	Sisma X SLD	39.6	0	0	0	174.35	1.351	22534	6361	Sisma Y SLD	0	39.6	0	0	174.35	1.351
22535	6362	Sisma X SLV	25.4	0	0	0	1.1E2	1.356	22536	6362	Sisma Y SLV	0	25.4	0	0	1.1E2	1.356
22537	6362	Sisma X SLD	25	0	0	0	1.1E2	1.356	22538	6362	Sisma Y SLD	0	25	0	0	1.1E2	1.356
22539	6363	Sisma X SLV	31.8	0	0	0	1.4E2	1.356	22540	6363	Sisma Y SLV	0	31.8	0	0	1.4E2	1.356
22541	6363	Sisma X SLD	31.3	0	0	0	1.4E2	1.356	22542	6363	Sisma Y SLD	0	31.3	0	0	1.4E2	1.356
22543	6364	Sisma X SLV	44.6	0	0	0	1.9E2	1.357	22544	6364	Sisma Y SLV	0	44.6	0	0	1.9E2	1.357
22545	6364	Sisma X SLD	43.9	0	0	0	1.9E2	1.357	22546	6364	Sisma Y SLD	0	43.9	0	0	1.9E2	1.357
22547	6365	Sisma X SLV	47.3	0	0	0	2.0E2	1.357	22548	6365	Sisma Y SLV	0	47.3	0	0	2.0E2	1.357
22549	6365	Sisma X SLD	46.6	0	0	0	2.0E2	1.357	22550	6365	Sisma Y SLD	0	46.6	0	0	2.0E2	1.357
22551	6366	Sisma X SLV	47.3	0	0	0	2.0E2	1.357	22552	6366	Sisma Y SLV	0	47.3	0	0	2.0E2	1.357
22553	6366	Sisma X SLD	46.6	0	0	0	2.0E2	1.357	22554	6366	Sisma Y SLD	0	46.6	0	0	2.0E2	1.357
22555	6367	Sisma X SLV	18.2	0	0	0	78.755	1.357	22556	6367	Sisma Y SLV	0	18.2	0	0	78.755	1.357
22557	6367	Sisma X SLD	17.9	0	0	0	78.755	1.357	22558	6367	Sisma Y SLD	0	17.9	0	0	78.755	1.357
22559	6368	Sisma X SLV	48.4	0	0	0	2.1E2	1.357	22560	6368	Sisma Y SLV	0	48.4	0	0	2.1E2	1.357
22561	6368	Sisma X SLD	47.6	0	0	0	2.1E2	1.357	22562	6368	Sisma Y SLD	0	47.6	0	0	2.1E2	1.357
22563	6369	Sisma X SLV	48.5	0	0	0	2.1E2	1.358	22564	6369	Sisma Y SLV	0	48.5	0	0	2.1E2	1.358
22565	6369	Sisma X SLD	47.7	0	0	0	2.1E2	1.358	22566	6369	Sisma Y SLD	0	47.7	0	0	2.1E2	1.358
22567	6370	Sisma X SLV	29.1	0	0	0	1.3E2	1.358	22568	6370	Sisma Y SLV	0	29.1	0	0	1.3E2	1.358
22569	6370	Sisma X SLD	28.6	0	0	0	1.3E2	1.358	22570	6370	Sisma Y SLD	0	28.6	0	0	1.3E2	1.358
22571	6371	Sisma X SLV	18.8	0	0	0	80.853	1.359	22572	6371	Sisma Y SLV	0	18.8	0	0	80.853	1.359
22573	6371	Sisma X SLD	18.5	0	0	0	80.853	1.359	22574	6371	Sisma Y SLD	0	18.5	0	0	80.853	1.359
22575	6372	Sisma X SLV	14.9	0	0	0	64.274	1.36	22576	6372	Sisma Y SLV	0	14.9	0	0	64.274	1.36
22577	6372	Sisma X SLD	14.7	0	0	0	64.274	1.36	22578	6372	Sisma Y SLD	0	14.7	0	0	64.274	1.36
22579	6373	Sisma X SLV	14.9	0	0	0	64.274	1.36	22580	6373	Sisma Y SLV	0	14.9	0	0	64.274	1.36
22581	6373	Sisma X SLD	14.7	0	0	0	64.274	1.36	22582	6373	Sisma Y SLD	0	14.7	0	0	64.274	1.36
22583	6374	Sisma X SLV	25.2	0	0	0	1.1E2	1.362	22584	6374	Sisma Y SLV	0	25.2	0	0	1.1E2	1.362
22585	6374	Sisma X SLD	24.8	0	0	0	1.1E2	1.362	22586	6374	Sisma Y SLD	0	24.8	0	0	1.1E2	1.362
22587	6375	Sisma X SLV	23.2	0	0	0	99.816	1.362	22588	6375	Sisma Y SLV	0	23.2	0	0	99.816	1.362
22589	6375	Sisma X SLD	22.8	0	0	0	99.816	1.362	22590	6375	Sisma Y SLD	0	22.8	0	0	99.816	1.362
22591	6376	Sisma X SLV	23.4	0	0	0	1.0E2	1.362	22592	6376	Sisma Y SLV	0	23.4	0	0	1.0E2	1.362
22593	6376	Sisma X SLD	23	0	0	0	1.0E2	1.362	22594	6376	Sisma Y SLD	0	23	0	0	1.0E2	1.362
22595	6377	Sisma X SLV	24.7	0	0	0	1.1E2	1.362	22596	6377	Sisma Y SLV	0	24.7	0	0	1.1E2	1.362
22597	6377	Sisma X SLD	24.3	0	0	0	1.1E2	1.362	22598	6377	Sisma Y SLD	0	24.3	0	0	1.1E2	1.362
22599	6378	Sisma X SLV	21.7	0	0	0	93.53	1.362	22600	6378	Sisma Y SLV	0	21.7	0	0	93.53	1.362
22601	6378	Sisma X SLD	21.4	0	0	0	93.53	1.362	22602	6378	Sisma Y SLD	0	21.4	0	0	93.53	1.362
22603	6379	Sisma X SLV	10.4	0	0	0	44.667	1.362	22604	6379	Sisma Y SLV	0	10.4	0	0	44.667	1.362
22605	6379	Sisma X SLD	10.2	0	0	0	44.667	1.362	22606	6379	Sisma Y SLD	0	10.2	0	0	44.667	1.362
22607	6380	Sisma X SLV	10.4	0	0	0	44.667	1.362	22608	6380	Sisma Y SLV	0	10.4	0	0	44.667	1.362
22609	6380	Sisma X SLD	10.2	0	0	0	44.667	1.362	22610	6380	Sisma Y SLD	0	10.2	0	0	44.667	1.362
22611	6381	Sisma X SLV	23	0	0	0	99.114	1.362	22612	6381	Sisma Y SLV	0	23	0	0	99.114	1.362
22613	6381	Sisma X SLD	22.7	0	0	0	99.114	1.362	22614	6381	Sisma Y SLD	0	22.7	0	0	99.114	1.362
22615	6382	Sisma X SLV	43.6	0	0	0	187.67	1.363	22616	6382	Sisma Y SLV	0	43.6	0	0	187.67	1.363
22617	6382	Sisma X SLD	42.9	0	0	0	187.67	1.363	22618	6382	Sisma Y SLD	0	42.9	0	0	187.67	1.363
22619	6383	Sisma X SLV	39.2	0	0	0	1.7E2	1.363	22620	6383	Sisma Y SLV	0	39.2	0	0	1.7E2	1.363
22621	6383	Sisma X SLD	38.6	0	0	0	1.7E2	1.363	22622	6383	Sisma Y SLD	0	38.6	0	0	1.7E2	1.363
22623	6384	Sisma X SLV	39.6	0	0	0	1.7E2	1.363	22624	6384	Sisma Y SLV	0	39.6	0	0	1.7E2	1.363
22625	6384	Sisma X SLD	38.9	0	0	0	1.7E2	1.363	22626	6384	Sisma Y SLD	0	38.9	0	0	1.7E2	1.363
22627	6385	Sisma X SLV	23.8	0	0	0	1.0E2	1.364	22628	6385	Sisma Y SLV	0	23.8	0	0	1.0E2	1.364
22629	6385	Sisma X SLD	23.5	0	0	0	1.0E2	1.364	22630	6385	Sisma Y SLD	0	23.5	0	0	1.0E2	1.364
22631	6386	Sisma X SLV	26.3	0	0	0	1.1E2	1.364	22632	6386	Sisma Y SLV	0	26.3	0	0	1.1E2	1.364
22633	6386	Sisma X SLD	25.9	0	0	0	1.1E2	1.364	22634	6386	Sisma Y SLD	0	25.9	0	0	1.1E2	1.364
22635	6387	Sisma X SLV	22.7	0	0	0	97.309	1.365	22636	6387	Sisma Y SLV	0	22.7	0	0	97.309	1.365
22637	6387	Sisma X SLD	22.3	0	0	0	97.309	1.365	22638	6387	Sisma Y SLD	0	22.3	0	0	97.309	1.365
22639	6388	Sisma X SLV	22.7	0	0	0	97.309	1.365	22640	6388	Sisma Y SLV	0	22.7	0	0	97.309	1.365
22641	6388	Sisma X SLD	22.3	0	0	0	97.309	1.365	22642	6388	Sisma Y SLD	0	22.3	0	0	97.309	1.365
22643	6389	Sisma X SLV	35.8	0	0	0	1.5E2	1.366	22644	6389	Sisma Y SLV	0	35.8	0	0	1.5E2	1.366
22645	6389	Sisma X SLD	35.3	0	0	0	1.5E2	1.366	22646	6389	Sisma Y SLD	0	35.3	0	0	1.5E2	1.366

Indice	Nodo	Condizione	Fx	Fy	Fz	Mz	Peso	Gamma	Indice	Nodo	Condizione	Fx	Fy	Fz	Mz	Peso	Gamma
22647	6390	Sisma X SLV	35.8	0	0	0	1.5E2	1.366	22648	6390	Sisma Y SLV	0	35.8	0	0	1.5E2	1.366
22649	6390	Sisma X SLD	35.3	0	0	0	1.5E2	1.366	22650	6390	Sisma Y SLD	0	35.3	0	0	1.5E2	1.366
22651	6391	Sisma X SLV	39.2	0	0	0	1.7E2	1.368	22652	6391	Sisma Y SLV	0	39.2	0	0	1.7E2	1.368
22653	6391	Sisma X SLD	38.6	0	0	0	1.7E2	1.368	22654	6391	Sisma Y SLD	0	38.6	0	0	1.7E2	1.368
22655	6392	Sisma X SLV	27	0	0	0	1.2E2	1.368	22656	6392	Sisma Y SLV	0	27	0	0	1.2E2	1.368
22657	6392	Sisma X SLD	26.6	0	0	0	1.2E2	1.368	22658	6392	Sisma Y SLD	0	26.6	0	0	1.2E2	1.368
22659	6393	Sisma X SLV	41	0	0	0	175.73	1.368	22660	6393	Sisma Y SLV	0	41	0	0	175.73	1.368
22661	6393	Sisma X SLD	40.4	0	0	0	175.73	1.368	22662	6393	Sisma Y SLD	0	40.4	0	0	175.73	1.368
22663	6394	Sisma X SLV	41	0	0	0	1.8E2	1.368	22664	6394	Sisma Y SLV	0	41	0	0	1.8E2	1.368
22665	6394	Sisma X SLD	40.3	0	0	0	1.8E2	1.368	22666	6394	Sisma Y SLD	0	40.3	0	0	1.8E2	1.368
22667	6395	Sisma X SLV	41	0	0	0	1.8E2	1.368	22668	6395	Sisma Y SLV	0	41	0	0	1.8E2	1.368
22669	6395	Sisma X SLD	40.3	0	0	0	1.8E2	1.368	22670	6395	Sisma Y SLD	0	40.3	0	0	1.8E2	1.368
22671	6396	Sisma X SLV	41.2	0	0	0	1.8E2	1.368	22672	6396	Sisma Y SLV	0	41.2	0	0	1.8E2	1.368
22673	6396	Sisma X SLD	40.5	0	0	0	1.8E2	1.368	22674	6396	Sisma Y SLD	0	40.5	0	0	1.8E2	1.368
22675	6397	Sisma X SLV	25.6	0	0	0	1.1E2	1.369	22676	6397	Sisma Y SLV	0	25.6	0	0	1.1E2	1.369
22677	6397	Sisma X SLD	25.2	0	0	0	1.1E2	1.369	22678	6397	Sisma Y SLD	0	25.2	0	0	1.1E2	1.369
22679	6398	Sisma X SLV	39.7	0	0	0	1.7E2	1.369	22680	6398	Sisma Y SLV	0	39.7	0	0	1.7E2	1.369
22681	6398	Sisma X SLD	39.1	0	0	0	1.7E2	1.369	22682	6398	Sisma Y SLD	0	39.1	0	0	1.7E2	1.369
22683	6399	Sisma X SLV	38.4	0	0	0	1.6E2	1.369	22684	6399	Sisma Y SLV	0	38.4	0	0	1.6E2	1.369
22685	6399	Sisma X SLD	37.7	0	0	0	1.6E2	1.369	22686	6399	Sisma Y SLD	0	37.7	0	0	1.6E2	1.369
22687	6400	Sisma X SLV	38.6	0	0	0	1.7E2	1.37	22688	6400	Sisma Y SLV	0	38.6	0	0	1.7E2	1.37
22689	6400	Sisma X SLD	38	0	0	0	1.7E2	1.37	22690	6400	Sisma Y SLD	0	38	0	0	1.7E2	1.37
22691	6401	Sisma X SLV	38.1	0	0	0	1.6E2	1.371	22692	6401	Sisma Y SLV	0	38.1	0	0	1.6E2	1.371
22693	6401	Sisma X SLD	37.5	0	0	0	1.6E2	1.371	22694	6401	Sisma Y SLD	0	37.5	0	0	1.6E2	1.371
22695	6402	Sisma X SLV	38.1	0	0	0	1.6E2	1.371	22696	6402	Sisma Y SLV	0	38.1	0	0	1.6E2	1.371
22697	6402	Sisma X SLD	37.5	0	0	0	1.6E2	1.371	22698	6402	Sisma Y SLD	0	37.5	0	0	1.6E2	1.371
22699	6403	Sisma X SLV	39.6	0	0	0	1.7E2	1.371	22700	6403	Sisma Y SLV	0	39.6	0	0	1.7E2	1.371
22701	6403	Sisma X SLD	38.9	0	0	0	1.7E2	1.371	22702	6403	Sisma Y SLD	0	38.9	0	0	1.7E2	1.371
22703	6404	Sisma X SLV	39.2	0	0	0	1.7E2	1.371	22704	6404	Sisma Y SLV	0	39.2	0	0	1.7E2	1.371
22705	6404	Sisma X SLD	38.6	0	0	0	1.7E2	1.371	22706	6404	Sisma Y SLD	0	38.6	0	0	1.7E2	1.371
22707	6405	Sisma X SLV	39.4	0	0	0	168.57	1.371	22708	6405	Sisma Y SLV	0	39.4	0	0	168.57	1.371
22709	6405	Sisma X SLD	38.8	0	0	0	168.57	1.371	22710	6405	Sisma Y SLD	0	38.8	0	0	168.57	1.371
22711	6406	Sisma X SLV	39.1	0	0	0	167.26	1.371	22712	6406	Sisma Y SLV	0	39.1	0	0	167.26	1.371
22713	6406	Sisma X SLD	38.5	0	0	0	167.26	1.371	22714	6406	Sisma Y SLD	0	38.5	0	0	167.26	1.371
22715	6407	Sisma X SLV	39.1	0	0	0	167.26	1.371	22716	6407	Sisma Y SLV	0	39.1	0	0	167.26	1.371
22717	6407	Sisma X SLD	38.5	0	0	0	167.26	1.371	22718	6407	Sisma Y SLD	0	38.5	0	0	167.26	1.371
22719	6408	Sisma X SLV	26	0	0	0	111.17	1.372	22720	6408	Sisma Y SLV	0	26	0	0	111.17	1.372
22721	6408	Sisma X SLD	25.6	0	0	0	111.17	1.372	22722	6408	Sisma Y SLD	0	25.6	0	0	111.17	1.372
22723	6409	Sisma X SLV	25.8	0	0	0	1.1E2	1.372	22724	6409	Sisma Y SLV	0	25.8	0	0	1.1E2	1.372
22725	6409	Sisma X SLD	25.4	0	0	0	1.1E2	1.372	22726	6409	Sisma Y SLD	0	25.4	0	0	1.1E2	1.372
22727	6410	Sisma X SLV	35.8	0	0	0	1.5E2	1.373	22728	6410	Sisma Y SLV	0	35.8	0	0	1.5E2	1.373
22729	6410	Sisma X SLD	35.2	0	0	0	1.5E2	1.373	22730	6410	Sisma Y SLD	0	35.2	0	0	1.5E2	1.373
22731	6411	Sisma X SLV	36	0	0	0	1.5E2	1.374	22732	6411	Sisma Y SLV	0	36	0	0	1.5E2	1.374
22733	6411	Sisma X SLD	35.4	0	0	0	1.5E2	1.374	22734	6411	Sisma Y SLD	0	35.4	0	0	1.5E2	1.374
22735	6412	Sisma X SLV	43.7	0	0	0	1.9E2	1.375	22736	6412	Sisma Y SLV	0	43.7	0	0	1.9E2	1.375
22737	6412	Sisma X SLD	43	0	0	0	1.9E2	1.375	22738	6412	Sisma Y SLD	0	43	0	0	1.9E2	1.375
22739	6413	Sisma X SLV	34.8	0	0	0	1.5E2	1.376	22740	6413	Sisma Y SLV	0	34.8	0	0	1.5E2	1.376
22741	6413	Sisma X SLD	34.2	0	0	0	1.5E2	1.376	22742	6413	Sisma Y SLD	0	34.2	0	0	1.5E2	1.376
22743	6414	Sisma X SLV	34.8	0	0	0	1.5E2	1.376	22744	6414	Sisma Y SLV	0	34.8	0	0	1.5E2	1.376
22745	6414	Sisma X SLD	34.2	0	0	0	1.5E2	1.376	22746	6414	Sisma Y SLD	0	34.2	0	0	1.5E2	1.376
22747	6415	Sisma X SLV	20	0	0	0	85.049	1.376	22748	6415	Sisma Y SLV	0	20	0	0	85.049	1.376
22749	6415	Sisma X SLD	19.6	0	0	0	85.049	1.376	22750	6415	Sisma Y SLD	0	19.6	0	0	85.049	1.376
22751	6416	Sisma X SLV	20	0	0	0	85.049	1.376	22752	6416	Sisma Y SLV	0	20	0	0	85.049	1.376
22753	6416	Sisma X SLD	19.6	0	0	0	85.049	1.376	22754	6416	Sisma Y SLD	0	19.6	0	0	85.049	1.376
22755	6417	Sisma X SLV	22.3	0	0	0	95.123	1.377	22756	6417	Sisma Y SLV	0	22.3	0	0	95.123	1.377
22757	6417	Sisma X SLD	22	0	0	0	95.123	1.377	22758	6417	Sisma Y SLD	0	22	0	0	95.123	1.377
22759	6418	Sisma X SLV	22.3	0	0	0	95.123	1.377	22760	6418	Sisma Y SLV	0	22.3	0	0	95.123	1.377
22761	6418	Sisma X SLD	22	0	0	0	95.123	1.377	22762	6418	Sisma Y SLD	0	22	0	0	95.123	1.377
22763	6419	Sisma X SLV	31.8	0	0	0	1.4E2	1.378	22764	6419	Sisma Y SLV	0	31.8	0	0	1.4E2	1.378
22765	6419	Sisma X SLD	31.3	0	0	0	1.4E2	1.378	22766	6419	Sisma Y SLD	0	31.3	0	0	1.4E2	1.378
22767	6420	Sisma X SLV	31.8	0	0	0	1.4E2	1.378	22768	6420	Sisma Y SLV	0	31.8	0	0	1.4E2	1.378
22769	6420	Sisma X SLD	31.3	0	0	0	1.4E2	1.378	22770	6420	Sisma Y SLD	0	31.3	0	0	1.4E2	1.378
22771	6421	Sisma X SLV	38	0	0	0	1.6E2	1.379	22772	6421	Sisma Y SLV	0	38	0	0	1.6E2	1.379
22773	6421	Sisma X SLD	37.4	0	0	0	1.6E2	1.379	22774	6421	Sisma Y SLD	0	37.4	0	0	1.6E2	1.379
22775	6422	Sisma X SLV	38	0	0	0	1.6E2	1.379	22776	6422	Sisma Y SLV	0	38	0	0	1.6E2	1.379
22777	6422	Sisma X SLD	37.4	0	0	0	1.6E2	1.379	22778	6422	Sisma Y SLD	0	37.4	0	0	1.6E2	1.379
22779	6423	Sisma X SLV	17.9	0	0	0	76.139	1.38	22780	6423	Sisma Y SLV	0	17.9	0	0	76.139	1.38
22781	6423	Sisma X SLD	17.6	0	0	0	76.139	1.38	22782	6423	Sisma Y SLD	0	17.6	0	0	76.139	1.38
22783	6424	Sisma X SLV	17.9	0	0	0	76.139	1.38	22784	6424	Sisma Y SLV	0	17.9	0	0	76.139	1.38
22785	6424	Sisma X SLD	17.6	0	0	0	76.139	1.38	22786	6424	Sisma Y SLD	0	17.6	0	0	76.139	1.38
22787	6425	Sisma X SLV	35	0	0	0	1.5E2	1.387	22788	6425	Sisma Y SLV	0	35	0	0	1.5E2	1.387
22789	6425	Sisma X SLD	34.4	0	0	0	1.5E2	1.387	22790	6425	Sisma Y SLD	0	34.4	0	0	1.5E2	1.387
22791	6426	Sisma X SLV	35	0	0	0	1.5E2	1.387	22792	6426	Sisma Y SLV	0	35	0	0	1.5E2	1.387
22793	6426	Sisma X SLD	34.4	0	0	0	1.5E2	1.387	22794	6426	Sisma Y SLD	0	34.4	0	0	1.5E2	1.387
22795	6427	Sisma X SLV	52.6	0	0	0	2.2E2	1.387	22796	6427	Sisma Y SLV	0	52.6	0	0	2.2E2	1.387
22797	6427	Sisma X SLD	51.8	0	0	0	2.2E2	1.387	22798	6427	Sisma Y SLD	0	51.8	0	0	2.2E2	1.387
22799	6428	Sisma X SLV	37.9	0	0	0	1.6E2	1.388	22800	6428	Sisma Y SLV	0	37.9	0	0	1.6E2	1.388
22801	6428	Sisma X SLD	37.3	0	0	0	1.6E2	1.388	22802	6428	Sisma Y SLD	0	37.3	0	0	1.6E2	1.388
22803	6429	Sisma X SLV	37.9	0	0	0	1.6E2	1.388	22804	6429	Sisma Y SLV	0	37.9	0	0	1.6E2	1.388
22805	6429	Sisma X SLD	37.3	0	0	0	1.6E2	1.388	22806	6429	Sisma Y SLD	0	37.3	0	0	1.6E2	1.388
22807	6430	Sisma X SLV	36.3	0	0	0	1.5E2	1.389	22808	6430	Sisma Y SLV	0	36.3	0	0	1.5E2	1.389
22809	6430	Sisma X SLD	35.7	0	0	0	1.5E2	1.389	22810	6430	Sisma Y SLD	0	35.7	0	0	1.5E2	1.389
22811	6431	Sisma X SLV	36.3	0	0	0	1.5E2	1.389	22812	6431	Sisma Y SLV	0	36.3	0	0	1.5E2	1.389
22813	6431	Sisma X SLD	35.7	0	0	0	1.5E2	1.389	22814	6431	Sisma Y SLD	0	35.7	0	0	1.5E2	1.389
22815	6432	Sisma X SLV	50.8	0	0	0	2.1E2	1.389	22816	6432	Sisma Y SLV	0	50.8	0	0	2.1E2	1.389
22817	6432	Sisma X SLD	50	0	0	0	2.1E2	1.389	22818	6432	Sisma Y SLD	0	50	0	0	2.1E2	1.389
22819	6433	Sisma X SLV	81.2	0	0	0	3.4E2	1.389	22820	6433	Sisma Y SLV	0	81.2	0	0	3.4E2	1.389
22821	6433	Sisma X SLD	79.9	0	0	0	3.4E2	1.389	22822	6433	Sisma Y SLD	0	79.9	0	0	3.4E2	1.389
22823	6434	Sisma X SLV	79.1	0	0	0	3.3E2	1.389	22824	6434	Sisma Y SLV	0	79.1	0	0	3.3E2	1.389
22825	6434	Sisma X SLD	77.9	0	0	0	3.3E2	1.389	22826	6434	Sisma Y SLD	0	77.9	0	0	3.3E2	1.389
22827	6435	Sisma X SLV	53.7	0	0	0	226.7	1.389	22828	6435	Sisma Y SLV	0	53.7	0	0	226.7	1.389
22829	6435	Sisma X SLD	52.9	0	0	0	226.7	1.389	22830	6435	Sisma Y SLD	0	52.9	0	0	226.7	1.389
22831	6436	Sisma X SLV	53.7	0	0	0	2.3E2	1.389	22832	6436	Sisma Y SLV	0	53.7	0	0	2.3E2	1.389
22833	6436	Sisma X SLD	52.9	0	0	0	2.3E2	1.389	22834	6436	Sisma Y SLD	0	52.9	0	0	2.3E2	1.389
22835	6437	Sisma X SLV	54.4	0	0	0	2.3E2	1.389	22836	6437	Sisma Y SLV	0	54.4	0	0	2.3E2	1.389
22837	6437	Sisma X SLD	53.6	0	0	0	2.3E2	1.389	22838	6437	Sisma Y SLD	0	53.6	0	0	2.3E2	1.389
22839	6438	Sisma X SLV	81	0	0	0	3.4E2	1.389	22840	6438	Sisma Y SLV	0	81	0	0	3.4E2	1.389
22841	6438	Sisma X SLD	79.7	0	0	0	3.4E2	1.389	22842	6438	Sisma Y SLD	0	79.7	0	0	3.4E2	1.389
22843	6439	Sisma X SLV	80.5	0	0	0	3.4E2	1.389	22844	6439	Sisma Y SLV	0	80.5	0	0	3.4E2	1.389
22845	6439	Sisma X SLD	79.2	0	0	0	3.4E2	1.389	22846	6439	Sisma Y SLD	0	79.2	0	0	3.4E2	1.389
22847	6440	Sisma X SLV	34.5	0	0	0	145.72	1.389	22848	6440	Sisma Y SLV	0	34.5	0	0	145.72	1.389
22849	6440	Sisma X SLD	34	0	0	0	145.72	1.389	22850	6440	Sisma Y SLD	0	34	0	0	145.72	1.389
22851	6441	Sisma X SLV	34.5	0	0	0	145.72	1.389	22852	6441	Sisma Y SLV	0	34.5	0	0	145.72	1.389
22853	6441	Sisma X SLD	34	0	0	0	145.72	1.389	22854	6441	Sisma Y SLD	0	34	0	0	145.72	1.389

Indice	Nodo	Condizione	Fx	Fy	Fz	Mz	Peso	Gamma	Indice	Nodo	Condizione	Fx	Fy	Fz	Mz	Peso	Gamma
22855	6442	Sisma X SLV	34.5	0	0	0	145.72	1.389	22856	6442	Sisma Y SLV	0	34.5	0	0	145.72	1.389
22857	6442	Sisma X SLD	34	0	0	0	145.72	1.389	22858	6442	Sisma Y SLD	0	34	0	0	145.72	1.389
22859	6443	Sisma X SLV	34.5	0	0	0	145.72	1.389	22860	6443	Sisma Y SLV	0	34.5	0	0	145.72	1.389
22861	6443	Sisma X SLD	34	0	0	0	145.72	1.389	22862	6443	Sisma Y SLD	0	34	0	0	145.72	1.389
22863	6444	Sisma X SLV	34.5	0	0	0	145.72	1.389	22864	6444	Sisma Y SLV	0	34.5	0	0	145.72	1.389
22865	6444	Sisma X SLD	34	0	0	0	145.72	1.389	22866	6444	Sisma Y SLD	0	34	0	0	145.72	1.389
22867	6445	Sisma X SLV	34.5	0	0	0	1.5E2	1.389	22868	6445	Sisma Y SLV	0	34.5	0	0	1.5E2	1.389
22869	6445	Sisma X SLD	34	0	0	0	1.5E2	1.389	22870	6445	Sisma Y SLD	0	34	0	0	1.5E2	1.389
22871	6446	Sisma X SLV	34.5	0	0	0	1.5E2	1.389	22872	6446	Sisma Y SLV	0	34.5	0	0	1.5E2	1.389
22873	6446	Sisma X SLD	34	0	0	0	1.5E2	1.389	22874	6446	Sisma Y SLD	0	34	0	0	1.5E2	1.389
22875	6447	Sisma X SLV	34.5	0	0	0	1.5E2	1.389	22876	6447	Sisma Y SLV	0	34.5	0	0	1.5E2	1.389
22877	6447	Sisma X SLD	34	0	0	0	1.5E2	1.389	22878	6447	Sisma Y SLD	0	34	0	0	1.5E2	1.389
22879	6448	Sisma X SLV	34.6	0	0	0	1.5E2	1.389	22880	6448	Sisma Y SLV	0	34.6	0	0	1.5E2	1.389
22881	6448	Sisma X SLD	34	0	0	0	1.5E2	1.389	22882	6448	Sisma Y SLD	0	34	0	0	1.5E2	1.389
22883	6449	Sisma X SLV	34.7	0	0	0	1.5E2	1.389	22884	6449	Sisma Y SLV	0	34.7	0	0	1.5E2	1.389
22885	6449	Sisma X SLD	34.1	0	0	0	1.5E2	1.389	22886	6449	Sisma Y SLD	0	34.1	0	0	1.5E2	1.389
22887	6450	Sisma X SLV	34.9	0	0	0	147.14	1.389	22888	6450	Sisma Y SLV	0	34.9	0	0	147.14	1.389
22889	6450	Sisma X SLD	34.3	0	0	0	147.14	1.389	22890	6450	Sisma Y SLD	0	34.3	0	0	147.14	1.389
22891	6451	Sisma X SLV	35.2	0	0	0	1.5E2	1.389	22892	6451	Sisma Y SLV	0	35.2	0	0	1.5E2	1.389
22893	6451	Sisma X SLD	34.6	0	0	0	1.5E2	1.389	22894	6451	Sisma Y SLD	0	34.6	0	0	1.5E2	1.389
22895	6452	Sisma X SLV	35.5	0	0	0	1.5E2	1.389	22896	6452	Sisma Y SLV	0	35.5	0	0	1.5E2	1.389
22897	6452	Sisma X SLD	34.9	0	0	0	1.5E2	1.389	22898	6452	Sisma Y SLD	0	34.9	0	0	1.5E2	1.389
22899	6453	Sisma X SLV	72.1	0	0	0	3.0E2	1.389	22900	6453	Sisma Y SLV	0	72.1	0	0	3.0E2	1.389
22901	6453	Sisma X SLD	71	0	0	0	3.0E2	1.389	22902	6453	Sisma Y SLD	0	71	0	0	3.0E2	1.389
22903	6454	Sisma X SLV	51.4	0	0	0	2.2E2	1.389	22904	6454	Sisma Y SLV	0	51.4	0	0	2.2E2	1.389
22905	6454	Sisma X SLD	50.5	0	0	0	2.2E2	1.389	22906	6454	Sisma Y SLD	0	50.5	0	0	2.2E2	1.389
22907	6455	Sisma X SLV	70.1	0	0	0	3.0E2	1.389	22908	6455	Sisma Y SLV	0	70.1	0	0	3.0E2	1.389
22909	6455	Sisma X SLD	69	0	0	0	3.0E2	1.389	22910	6455	Sisma Y SLD	0	69	0	0	3.0E2	1.389
22911	6456	Sisma X SLV	53.7	0	0	0	2.3E2	1.389	22912	6456	Sisma Y SLV	0	53.7	0	0	2.3E2	1.389
22913	6456	Sisma X SLD	52.9	0	0	0	2.3E2	1.389	22914	6456	Sisma Y SLD	0	52.9	0	0	2.3E2	1.389
22915	6457	Sisma X SLV	53.7	0	0	0	2.3E2	1.389	22916	6457	Sisma Y SLV	0	53.7	0	0	2.3E2	1.389
22917	6457	Sisma X SLD	52.9	0	0	0	2.3E2	1.389	22918	6457	Sisma Y SLD	0	52.9	0	0	2.3E2	1.389
22919	6458	Sisma X SLV	56.1	0	0	0	2.4E2	1.389	22920	6458	Sisma Y SLV	0	56.1	0	0	2.4E2	1.389
22921	6458	Sisma X SLD	55.2	0	0	0	2.4E2	1.389	22922	6458	Sisma Y SLD	0	55.2	0	0	2.4E2	1.389
22923	6459	Sisma X SLV	52.8	0	0	0	2.2E2	1.389	22924	6459	Sisma Y SLV	0	52.8	0	0	2.2E2	1.389
22925	6459	Sisma X SLD	51.9	0	0	0	2.2E2	1.389	22926	6459	Sisma Y SLD	0	51.9	0	0	2.2E2	1.389
22927	6460	Sisma X SLV	53.7	0	0	0	226.66	1.389	22928	6460	Sisma Y SLV	0	53.7	0	0	226.66	1.389
22929	6460	Sisma X SLD	52.9	0	0	0	226.66	1.389	22930	6460	Sisma Y SLD	0	52.9	0	0	226.66	1.389
22931	6461	Sisma X SLV	53.7	0	0	0	2.3E2	1.389	22932	6461	Sisma Y SLV	0	53.7	0	0	2.3E2	1.389
22933	6461	Sisma X SLD	52.8	0	0	0	2.3E2	1.389	22934	6461	Sisma Y SLD	0	52.8	0	0	2.3E2	1.389
22935	6462	Sisma X SLV	52.9	0	0	0	2.2E2	1.389	22936	6462	Sisma Y SLV	0	52.9	0	0	2.2E2	1.389
22937	6462	Sisma X SLD	52.1	0	0	0	2.2E2	1.389	22938	6462	Sisma Y SLD	0	52.1	0	0	2.2E2	1.389
22939	6463	Sisma X SLV	53.7	0	0	0	2.3E2	1.389	22940	6463	Sisma Y SLV	0	53.7	0	0	2.3E2	1.389
22941	6463	Sisma X SLD	52.8	0	0	0	2.3E2	1.389	22942	6463	Sisma Y SLD	0	52.8	0	0	2.3E2	1.389
22943	6464	Sisma X SLV	53.7	0	0	0	226.69	1.389	22944	6464	Sisma Y SLV	0	53.7	0	0	226.69	1.389
22945	6464	Sisma X SLD	52.9	0	0	0	226.69	1.389	22946	6464	Sisma Y SLD	0	52.9	0	0	226.69	1.389
22947	6465	Sisma X SLV	53.6	0	0	0	226.07	1.389	22948	6465	Sisma Y SLV	0	53.6	0	0	226.07	1.389
22949	6465	Sisma X SLD	52.7	0	0	0	226.07	1.389	22950	6465	Sisma Y SLD	0	52.7	0	0	226.07	1.389
22951	6466	Sisma X SLV	53.4	0	0	0	2.3E2	1.389	22952	6466	Sisma Y SLV	0	53.4	0	0	2.3E2	1.389
22953	6466	Sisma X SLD	52.5	0	0	0	2.3E2	1.389	22954	6466	Sisma Y SLD	0	52.5	0	0	2.3E2	1.389
22955	6467	Sisma X SLV	53.6	0	0	0	2.3E2	1.389	22956	6467	Sisma Y SLV	0	53.6	0	0	2.3E2	1.389
22957	6467	Sisma X SLD	52.7	0	0	0	2.3E2	1.389	22958	6467	Sisma Y SLD	0	52.7	0	0	2.3E2	1.389
22959	6468	Sisma X SLV	54	0	0	0	2.3E2	1.389	22960	6468	Sisma Y SLV	0	54	0	0	2.3E2	1.389
22961	6468	Sisma X SLD	53.2	0	0	0	2.3E2	1.389	22962	6468	Sisma Y SLD	0	53.2	0	0	2.3E2	1.389
22963	6469	Sisma X SLV	53.2	0	0	0	224.64	1.389	22964	6469	Sisma Y SLV	0	53.2	0	0	224.64	1.389
22965	6469	Sisma X SLD	52.4	0	0	0	224.64	1.389	22966	6469	Sisma Y SLD	0	52.4	0	0	224.64	1.389
22967	6470	Sisma X SLV	54.4	0	0	0	2.3E2	1.389	22968	6470	Sisma Y SLV	0	54.4	0	0	2.3E2	1.389
22969	6470	Sisma X SLD	53.5	0	0	0	2.3E2	1.389	22970	6470	Sisma Y SLD	0	53.5	0	0	2.3E2	1.389
22971	6471	Sisma X SLV	53.3	0	0	0	2.2E2	1.389	22972	6471	Sisma Y SLV	0	53.3	0	0	2.2E2	1.389
22973	6471	Sisma X SLD	52.5	0	0	0	2.2E2	1.389	22974	6471	Sisma Y SLD	0	52.5	0	0	2.2E2	1.389
22975	6472	Sisma X SLV	54.7	0	0	0	2.3E2	1.389	22976	6472	Sisma Y SLV	0	54.7	0	0	2.3E2	1.389
22977	6472	Sisma X SLD	53.8	0	0	0	2.3E2	1.389	22978	6472	Sisma Y SLD	0	53.8	0	0	2.3E2	1.389
22979	6473	Sisma X SLV	52.5	0	0	0	2.2E2	1.389	22980	6473	Sisma Y SLV	0	52.5	0	0	2.2E2	1.389
22981	6473	Sisma X SLD	51.6	0	0	0	2.2E2	1.389	22982	6473	Sisma Y SLD	0	51.6	0	0	2.2E2	1.389
22983	6474	Sisma X SLV	33.9	0	0	0	1.4E2	1.389	22984	6474	Sisma Y SLV	0	33.9	0	0	1.4E2	1.389
22985	6474	Sisma X SLD	33.4	0	0	0	1.4E2	1.389	22986	6474	Sisma Y SLD	0	33.4	0	0	1.4E2	1.389
22987	6475	Sisma X SLV	54.8	0	0	0	2.3E2	1.389	22988	6475	Sisma Y SLV	0	54.8	0	0	2.3E2	1.389
22989	6475	Sisma X SLD	54	0	0	0	2.3E2	1.389	22990	6475	Sisma Y SLD	0	54	0	0	2.3E2	1.389
22991	6476	Sisma X SLV	33.9	0	0	0	1.4E2	1.389	22992	6476	Sisma Y SLV	0	33.9	0	0	1.4E2	1.389
22993	6476	Sisma X SLD	33.4	0	0	0	1.4E2	1.389	22994	6476	Sisma Y SLD	0	33.4	0	0	1.4E2	1.389
22995	6477	Sisma X SLV	37.9	0	0	0	1.6E2	1.389	22996	6477	Sisma Y SLV	0	37.9	0	0	1.6E2	1.389
22997	6477	Sisma X SLD	37.3	0	0	0	1.6E2	1.389	22998	6477	Sisma Y SLD	0	37.3	0	0	1.6E2	1.389
22999	6478	Sisma X SLV	37.9	0	0	0	1.6E2	1.389	23000	6478	Sisma Y SLV	0	37.9	0	0	1.6E2	1.389
23001	6478	Sisma X SLD	37.3	0	0	0	1.6E2	1.389	23002	6478	Sisma Y SLD	0	37.3	0	0	1.6E2	1.389
23003	6479	Sisma X SLV	54	0	0	0	2.3E2	1.389	23004	6479	Sisma Y SLV	0	54	0	0	2.3E2	1.389
23005	6479	Sisma X SLD	53.1	0	0	0	2.3E2	1.389	23006	6479	Sisma Y SLD	0	53.1	0	0	2.3E2	1.389
23007	6480	Sisma X SLV	51.1	0	0	0	215.44	1.389	23008	6480	Sisma Y SLV	0	51.1	0	0	215.44	1.389
23009	6480	Sisma X SLD	50.3	0	0	0	215.44	1.389	23010	6480	Sisma Y SLD	0	50.3	0	0	215.44	1.389
23011	6481	Sisma X SLV	51.7	0	0	0	218.25	1.389	23012	6481	Sisma Y SLV	0	51.7	0	0	218.25	1.389
23013	6481	Sisma X SLD	50.9	0	0	0	218.25	1.389	23014	6481	Sisma Y SLD	0	50.9	0	0	218.25	1.389
23015	6482	Sisma X SLV	51.2	0	0	0	2.2E2	1.389	23016	6482	Sisma Y SLV	0	51.2	0	0	2.2E2	1.389
23017	6482	Sisma X SLD	50.4	0	0	0	2.2E2	1.389	23018	6482	Sisma Y SLD	0	50.4	0	0	2.2E2	1.389
23019	6483	Sisma X SLV	56	0	0	0	2.4E2	1.389	23020	6483	Sisma Y SLV	0	56	0	0	2.4E2	1.389
23021	6483	Sisma X SLD	55.1	0	0	0	2.4E2	1.389	23022	6483	Sisma Y SLD	0	55.1	0	0	2.4E2	1.389
23023	6484	Sisma X SLV	52.9	0	0	0	2.2E2	1.389	23024	6484	Sisma Y SLV	0	52.9	0	0	2.2E2	1.389
23025	6484	Sisma X SLD	52	0	0	0	2.2E2	1.389	23026	6484	Sisma Y SLD	0	52	0	0	2.2E2	1.389
23027	6485	Sisma X SLV	55.9	0	0	0	2.4E2	1.389	23028	6485	Sisma Y SLV	0	55.9	0	0	2.4E2	1.389
23029	6485	Sisma X SLD	55	0	0	0	2.4E2	1.389	23030	6485	Sisma Y SLD	0	55	0	0	2.4E2	1.389
23031	6486	Sisma X SLV	54.3	0	0	0	2.3E2	1.389	23032	6486	Sisma Y SLV	0	54.3	0	0	2.3E2	1.389
23033	6486	Sisma X SLD	53.4	0	0	0	2.3E2	1.389	23034	6486	Sisma Y SLD	0	53.4	0	0	2.3E2	1.389
23035	6487	Sisma X SLV	33.9	0	0	0	1.4E2	1.389	23036	6487	Sisma Y SLV	0	33.9	0	0	1.4E2	1.389
23037	6487	Sisma X SLD	33.4	0	0	0	1.4E2	1.389	23038	6487	Sisma Y SLD	0	33.4	0	0	1.4E2	1.389
23039	6488	Sisma X SLV	44.7	0	0	0	1.9E2	1.389	23040	6488	Sisma Y SLV	0	44.7	0	0	1.9E2	1.389
23041	6488	Sisma X SLD	44	0	0	0	1.9E2	1.389	23042	6488	Sisma Y SLD	0	44	0	0	1.9E2	1.389
23043	6489	Sisma X SLV	49.7	0	0	0	2.1E2	1.389	23044	6489	Sisma Y SLV	0	49.7	0	0	2.1E2	1.389
23045	6489	Sisma X SLD	48.9	0	0	0	2.1E2	1.389	23046	6489	Sisma Y SLD	0	48.9	0	0	2.1E2	1.389
23047	6490	Sisma X SLV	33.9	0	0	0	142.99	1.389	23048	6490	Sisma Y SLV	0	33.9	0	0	142.99	1.389
23049	6490	Sisma X SLD	33.4	0	0	0	142.99	1.389	23050	6490	Sisma Y SLD	0	33.4	0	0	142.99	1.389
23051	6491	Sisma X SLV	56.2	0	0	0	2.4E2	1.389	23052	6491	Sisma Y SLV	0	56.2	0	0	2.4E2	1.389
23053	6491	Sisma X SLD	55.3	0	0	0	2.4E2	1.389	23054	6491	Sisma Y SLD	0	55.3	0	0	2.4E2	1.389
23055	6492	Sisma X SLV	53.4	0	0	0	2.3E2	1.389	23056	6492	Sisma Y SLV	0	53.4	0	0	2.3E2	1.389

Indice	Nodo	Condizione	Fx	Fy	Fz	Mz	Peso	Gamma	Indice	Nodo	Condizione	Fx	Fy	Fz	Mz	Peso	Gamma
23057	6492	Sisma X SLD	52.6	0	0	0	2.3E2	1.389	23058	6492	Sisma Y SLD	0	52.6	0	0	2.3E2	1.389
23059	6493	Sisma X SLV	57.3	0	0	0	2.4E2	1.389	23060	6493	Sisma Y SLV	0	57.3	0	0	2.4E2	1.389
23061	6493	Sisma X SLD	56.4	0	0	0	2.4E2	1.389	23062	6493	Sisma Y SLD	0	56.4	0	0	2.4E2	1.389
23063	6494	Sisma X SLV	57.4	0	0	0	2.4E2	1.389	23064	6494	Sisma Y SLV	0	57.4	0	0	2.4E2	1.389
23065	6494	Sisma X SLD	56.5	0	0	0	2.4E2	1.389	23066	6494	Sisma Y SLD	0	56.5	0	0	2.4E2	1.389
23067	6495	Sisma X SLV	33.9	0	0	0	1.4E2	1.389	23068	6495	Sisma Y SLV	0	33.9	0	0	1.4E2	1.389
23069	6495	Sisma X SLD	33.4	0	0	0	1.4E2	1.389	23070	6495	Sisma Y SLD	0	33.4	0	0	1.4E2	1.389
23071	6496	Sisma X SLV	53.4	0	0	0	2.3E2	1.389	23072	6496	Sisma Y SLV	0	53.4	0	0	2.3E2	1.389
23073	6496	Sisma X SLD	52.5	0	0	0	2.3E2	1.389	23074	6496	Sisma Y SLD	0	52.5	0	0	2.3E2	1.389
23075	6497	Sisma X SLV	49.9	0	0	0	2.1E2	1.389	23076	6497	Sisma Y SLV	0	49.9	0	0	2.1E2	1.389
23077	6497	Sisma X SLD	49.1	0	0	0	2.1E2	1.389	23078	6497	Sisma Y SLD	0	49.1	0	0	2.1E2	1.389
23079	6498	Sisma X SLV	49.2	0	0	0	2.1E2	1.389	23080	6498	Sisma Y SLV	0	49.2	0	0	2.1E2	1.389
23081	6498	Sisma X SLD	48.4	0	0	0	2.1E2	1.389	23082	6498	Sisma Y SLD	0	48.4	0	0	2.1E2	1.389
23083	6499	Sisma X SLV	49.9	0	0	0	2.1E2	1.389	23084	6499	Sisma Y SLV	0	49.9	0	0	2.1E2	1.389
23085	6499	Sisma X SLD	49.1	0	0	0	2.1E2	1.389	23086	6499	Sisma Y SLD	0	49.1	0	0	2.1E2	1.389
23087	6500	Sisma X SLV	52.3	0	0	0	2.2E2	1.389	23088	6500	Sisma Y SLV	0	52.3	0	0	2.2E2	1.389
23089	6500	Sisma X SLD	51.4	0	0	0	2.2E2	1.389	23090	6500	Sisma Y SLD	0	51.4	0	0	2.2E2	1.389
23091	6501	Sisma X SLV	57.3	0	0	0	2.4E2	1.389	23092	6501	Sisma Y SLV	0	57.3	0	0	2.4E2	1.389
23093	6501	Sisma X SLD	56.4	0	0	0	2.4E2	1.389	23094	6501	Sisma Y SLD	0	56.4	0	0	2.4E2	1.389
23095	6502	Sisma X SLV	57.8	0	0	0	2.4E2	1.389	23096	6502	Sisma Y SLV	0	57.8	0	0	2.4E2	1.389
23097	6502	Sisma X SLD	56.9	0	0	0	2.4E2	1.389	23098	6502	Sisma Y SLD	0	56.9	0	0	2.4E2	1.389
23099	6503	Sisma X SLV	38.9	0	0	0	1.6E2	1.389	23100	6503	Sisma Y SLV	0	38.9	0	0	1.6E2	1.389
23101	6503	Sisma X SLD	38.3	0	0	0	1.6E2	1.389	23102	6503	Sisma Y SLD	0	38.3	0	0	1.6E2	1.389
23103	6504	Sisma X SLV	38.9	0	0	0	1.6E2	1.389	23104	6504	Sisma Y SLV	0	38.9	0	0	1.6E2	1.389
23105	6504	Sisma X SLD	38.3	0	0	0	1.6E2	1.389	23106	6504	Sisma Y SLD	0	38.3	0	0	1.6E2	1.389
23107	6505	Sisma X SLV	33.9	0	0	0	1.4E2	1.389	23108	6505	Sisma Y SLV	0	33.9	0	0	1.4E2	1.389
23109	6505	Sisma X SLD	33.4	0	0	0	1.4E2	1.389	23110	6505	Sisma Y SLD	0	33.4	0	0	1.4E2	1.389
23111	6506	Sisma X SLV	54.7	0	0	0	2.3E2	1.39	23112	6506	Sisma Y SLV	0	54.7	0	0	2.3E2	1.39
23113	6506	Sisma X SLD	53.8	0	0	0	2.3E2	1.39	23114	6506	Sisma Y SLD	0	53.8	0	0	2.3E2	1.39
23115	6507	Sisma X SLV	52.4	0	0	0	2.2E2	1.39	23116	6507	Sisma Y SLV	0	52.4	0	0	2.2E2	1.39
23117	6507	Sisma X SLD	51.6	0	0	0	2.2E2	1.39	23118	6507	Sisma Y SLD	0	51.6	0	0	2.2E2	1.39
23119	6508	Sisma X SLV	33.9	0	0	0	1.4E2	1.39	23120	6508	Sisma Y SLV	0	33.9	0	0	1.4E2	1.39
23121	6508	Sisma X SLD	33.4	0	0	0	1.4E2	1.39	23122	6508	Sisma Y SLD	0	33.4	0	0	1.4E2	1.39
23123	6509	Sisma X SLV	44	0	0	0	1.9E2	1.39	23124	6509	Sisma Y SLV	0	44	0	0	1.9E2	1.39
23125	6509	Sisma X SLD	43.3	0	0	0	1.9E2	1.39	23126	6509	Sisma Y SLD	0	43.3	0	0	1.9E2	1.39
23127	6510	Sisma X SLV	49.2	0	0	0	2.1E2	1.39	23128	6510	Sisma Y SLV	0	49.2	0	0	2.1E2	1.39
23129	6510	Sisma X SLD	48.4	0	0	0	2.1E2	1.39	23130	6510	Sisma Y SLD	0	48.4	0	0	2.1E2	1.39
23131	6511	Sisma X SLV	33.9	0	0	0	142.94	1.39	23132	6511	Sisma Y SLV	0	33.9	0	0	142.94	1.39
23133	6511	Sisma X SLD	33.4	0	0	0	142.94	1.39	23134	6511	Sisma Y SLD	0	33.4	0	0	142.94	1.39
23135	6512	Sisma X SLV	51.4	0	0	0	216.77	1.39	23136	6512	Sisma Y SLV	0	51.4	0	0	216.77	1.39
23137	6512	Sisma X SLD	50.6	0	0	0	216.77	1.39	23138	6512	Sisma Y SLD	0	50.6	0	0	216.77	1.39
23139	6513	Sisma X SLV	54.8	0	0	0	231.14	1.39	23140	6513	Sisma Y SLV	0	54.8	0	0	231.14	1.39
23141	6513	Sisma X SLD	53.9	0	0	0	231.14	1.39	23142	6513	Sisma Y SLD	0	53.9	0	0	231.14	1.39
23143	6514	Sisma X SLV	55.9	0	0	0	2.4E2	1.39	23144	6514	Sisma Y SLV	0	55.9	0	0	2.4E2	1.39
23145	6514	Sisma X SLD	55.1	0	0	0	2.4E2	1.39	23146	6514	Sisma Y SLD	0	55.1	0	0	2.4E2	1.39
23147	6515	Sisma X SLV	54.9	0	0	0	2.3E2	1.39	23148	6515	Sisma Y SLV	0	54.9	0	0	2.3E2	1.39
23149	6515	Sisma X SLD	54	0	0	0	2.3E2	1.39	23150	6515	Sisma Y SLD	0	54	0	0	2.3E2	1.39
23151	6516	Sisma X SLV	54.1	0	0	0	2.3E2	1.39	23152	6516	Sisma Y SLV	0	54.1	0	0	2.3E2	1.39
23153	6516	Sisma X SLD	53.2	0	0	0	2.3E2	1.39	23154	6516	Sisma Y SLD	0	53.2	0	0	2.3E2	1.39
23155	6517	Sisma X SLV	33.9	0	0	0	1.4E2	1.39	23156	6517	Sisma Y SLV	0	33.9	0	0	1.4E2	1.39
23157	6517	Sisma X SLD	33.4	0	0	0	1.4E2	1.39	23158	6517	Sisma Y SLD	0	33.4	0	0	1.4E2	1.39
23159	6518	Sisma X SLV	50.3	0	0	0	2.1E2	1.39	23160	6518	Sisma Y SLV	0	50.3	0	0	2.1E2	1.39
23161	6518	Sisma X SLD	49.5	0	0	0	2.1E2	1.39	23162	6518	Sisma Y SLD	0	49.5	0	0	2.1E2	1.39
23163	6519	Sisma X SLV	52.4	0	0	0	2.2E2	1.39	23164	6519	Sisma Y SLV	0	52.4	0	0	2.2E2	1.39
23165	6519	Sisma X SLD	51.5	0	0	0	2.2E2	1.39	23166	6519	Sisma Y SLD	0	51.5	0	0	2.2E2	1.39
23167	6520	Sisma X SLV	55.7	0	0	0	2.3E2	1.39	23168	6520	Sisma Y SLV	0	55.7	0	0	2.3E2	1.39
23169	6520	Sisma X SLD	54.8	0	0	0	2.3E2	1.39	23170	6520	Sisma Y SLD	0	54.8	0	0	2.3E2	1.39
23171	6521	Sisma X SLV	49.1	0	0	0	2.1E2	1.39	23172	6521	Sisma Y SLV	0	49.1	0	0	2.1E2	1.39
23173	6521	Sisma X SLD	48.4	0	0	0	2.1E2	1.39	23174	6521	Sisma Y SLD	0	48.4	0	0	2.1E2	1.39
23175	6522	Sisma X SLV	55.3	0	0	0	2.3E2	1.39	23176	6522	Sisma Y SLV	0	55.3	0	0	2.3E2	1.39
23177	6522	Sisma X SLD	54.4	0	0	0	2.3E2	1.39	23178	6522	Sisma Y SLD	0	54.4	0	0	2.3E2	1.39
23179	6523	Sisma X SLV	54.7	0	0	0	2.3E2	1.39	23180	6523	Sisma Y SLV	0	54.7	0	0	2.3E2	1.39
23181	6523	Sisma X SLD	53.8	0	0	0	2.3E2	1.39	23182	6523	Sisma Y SLD	0	53.8	0	0	2.3E2	1.39
23183	6524	Sisma X SLV	53.7	0	0	0	2.3E2	1.39	23184	6524	Sisma Y SLV	0	53.7	0	0	2.3E2	1.39
23185	6524	Sisma X SLD	52.8	0	0	0	2.3E2	1.39	23186	6524	Sisma Y SLD	0	52.8	0	0	2.3E2	1.39
23187	6525	Sisma X SLV	59.2	0	0	0	2.5E2	1.39	23188	6525	Sisma Y SLV	0	59.2	0	0	2.5E2	1.39
23189	6525	Sisma X SLD	58.3	0	0	0	2.5E2	1.39	23190	6525	Sisma Y SLD	0	58.3	0	0	2.5E2	1.39
23191	6526	Sisma X SLV	56.3	0	0	0	2.4E2	1.39	23192	6526	Sisma Y SLV	0	56.3	0	0	2.4E2	1.39
23193	6526	Sisma X SLD	55.4	0	0	0	2.4E2	1.39	23194	6526	Sisma Y SLD	0	55.4	0	0	2.4E2	1.39
23195	6527	Sisma X SLV	56	0	0	0	2.4E2	1.39	23196	6527	Sisma Y SLV	0	56	0	0	2.4E2	1.39
23197	6527	Sisma X SLD	55.1	0	0	0	2.4E2	1.39	23198	6527	Sisma Y SLD	0	55.1	0	0	2.4E2	1.39
23199	6528	Sisma X SLV	55.4	0	0	0	2.3E2	1.39	23200	6528	Sisma Y SLV	0	55.4	0	0	2.3E2	1.39
23201	6528	Sisma X SLD	54.5	0	0	0	2.3E2	1.39	23202	6528	Sisma Y SLD	0	54.5	0	0	2.3E2	1.39
23203	6529	Sisma X SLV	53.3	0	0	0	2.2E2	1.39	23204	6529	Sisma Y SLV	0	53.3	0	0	2.2E2	1.39
23205	6529	Sisma X SLD	52.5	0	0	0	2.2E2	1.39	23206	6529	Sisma Y SLD	0	52.5	0	0	2.2E2	1.39
23207	6530	Sisma X SLV	34	0	0	0	1.4E2	1.39	23208	6530	Sisma Y SLV	0	34	0	0	1.4E2	1.39
23209	6530	Sisma X SLD	33.5	0	0	0	1.4E2	1.39	23210	6530	Sisma Y SLD	0	33.5	0	0	1.4E2	1.39
23211	6531	Sisma X SLV	53.9	0	0	0	2.3E2	1.39	23212	6531	Sisma Y SLV	0	53.9	0	0	2.3E2	1.39
23213	6531	Sisma X SLD	53	0	0	0	2.3E2	1.39	23214	6531	Sisma Y SLD	0	53	0	0	2.3E2	1.39
23215	6532	Sisma X SLV	53.5	0	0	0	2.3E2	1.39	23216	6532	Sisma Y SLV	0	53.5	0	0	2.3E2	1.39
23217	6532	Sisma X SLD	52.6	0	0	0	2.3E2	1.39	23218	6532	Sisma Y SLD	0	52.6	0	0	2.3E2	1.39
23219	6533	Sisma X SLV	53.2	0	0	0	2.2E2	1.39	23220	6533	Sisma Y SLV	0	53.2	0	0	2.2E2	1.39
23221	6533	Sisma X SLD	52.4	0	0	0	2.2E2	1.39	23222	6533	Sisma Y SLD	0	52.4	0	0	2.2E2	1.39
23223	6534	Sisma X SLV	53.9	0	0	0	2.3E2	1.39	23224	6534	Sisma Y SLV	0	53.9	0	0	2.3E2	1.39
23225	6534	Sisma X SLD	53.1	0	0	0	2.3E2	1.39	23226	6534	Sisma Y SLD	0	53.1	0	0	2.3E2	1.39
23227	6535	Sisma X SLV	50.7	0	0	0	213.9	1.39	23228	6535	Sisma Y SLV	0	50.7	0	0	213.9	1.39
23229	6535	Sisma X SLD	49.9	0	0	0	213.9	1.39	23230	6535	Sisma Y SLD	0	49.9	0	0	213.9	1.39
23231	6536	Sisma X SLV	52.1	0	0	0	2.2E2	1.39	23232	6536	Sisma Y SLV	0	52.1	0	0	2.2E2	1.39
23233	6536	Sisma X SLD	51.3	0	0	0	2.2E2	1.39	23234	6536	Sisma Y SLD	0	51.3	0	0	2.2E2	1.39
23235	6537	Sisma X SLV	57.5	0	0	0	242.42	1.39	23236	6537	Sisma Y SLV	0	57.5	0	0	242.42	1.39
23237	6537	Sisma X SLD	56.6	0	0	0	242.42	1.39	23238	6537	Sisma Y SLD	0	56.6	0	0	242.42	1.39
23239	6538	Sisma X SLV	57.5	0	0	0	2.4E2	1.39	23240	6538	Sisma Y SLV	0	57.5	0	0	2.4E2	1.39
23241	6538	Sisma X SLD	56.5	0	0	0	2.4E2	1.39	23242	6538	Sisma Y SLD	0	56.5	0	0	2.4E2	1.39
23243	6539	Sisma X SLV	51.3	0	0	0	2.2E2	1.39	23244	6539	Sisma Y SLV	0	51.3	0	0	2.2E2	1.39
23245	6539	Sisma X SLD	50.5	0	0	0	2.2E2	1.39	23246	6539	Sisma Y SLD	0	50.5	0	0	2.2E2	1.39
23247	6540	Sisma X SLV	57	0	0	0	2.4E2	1.39	23248	6540	Sisma Y SLV	0	57	0	0	2.4E2	1.39
23249	6540	Sisma X SLD	56.1	0	0	0	2.4E2	1.39	23250	6540	Sisma Y SLD	0	56.1	0	0	2.4E2	1.39
23251	6541	Sisma X SLV	57	0	0	0	2.4E2	1.39	23252	6541	Sisma Y SLV	0	57	0	0	2.4E2	1.39
23253	6541	Sisma X SLD	56.1	0	0	0	2.4E2	1.39	23254	6541	Sisma Y SLD	0	56.1	0	0	2.4E2	1.39
23255	6542	Sisma X SLV	50.7	0	0	0	2.1E2	1.39	23256	6542	Sisma Y SLV	0	50.7	0	0	2.1E2	1.39
23257	6542	Sisma X SLD	49.9	0	0	0	2.1E2	1.39	23258	6542	Sisma Y SLD	0	49.9	0	0	2.1E2	1.39
23259	6543	Sisma X SLV	57.9	0	0	0	2.4E2	1.39	23260	6543	Sisma Y SLV	0	57.9	0	0	2.4E2	1.39
23261	6543	Sisma X SLD	57	0	0	0	2.4E2	1.39	23262	6543	Sisma Y SLD	0	57	0	0	2.4E2	1.39
23263	6544	Sisma X SLV	57.8	0	0	0	2.4E2	1.39	23264	6544	Sisma Y SLV	0	57.8	0	0	2.4E2	1.39

muratura

Indice	Nodo	Condizione	Fx	Fy	Fz	Mz	Peso	Gamma	Indice	Nodo	Condizione	Fx	Fy	Fz	Mz	Peso	Gamma
23265	6544	Sisma X SLD	56.9	0	0	0	2.4E2	1.39	23266	6544	Sisma Y SLD	0	56.9	0	0	2.4E2	1.39
23267	6545	Sisma X SLV	34.2	0	0	0	1.4E2	1.39	23268	6545	Sisma Y SLV	0	34.2	0	0	1.4E2	1.39
23269	6545	Sisma X SLD	33.7	0	0	0	1.4E2	1.39	23270	6545	Sisma Y SLD	0	33.7	0	0	1.4E2	1.39
23271	6546	Sisma X SLV	56.2	0	0	0	2.4E2	1.39	23272	6546	Sisma Y SLV	0	56.2	0	0	2.4E2	1.39
23273	6546	Sisma X SLD	55.3	0	0	0	2.4E2	1.39	23274	6546	Sisma Y SLD	0	55.3	0	0	2.4E2	1.39
23275	6547	Sisma X SLV	53.1	0	0	0	2.2E2	1.39	23276	6547	Sisma Y SLV	0	53.1	0	0	2.2E2	1.39
23277	6547	Sisma X SLD	52.2	0	0	0	2.2E2	1.39	23278	6547	Sisma Y SLD	0	52.2	0	0	2.2E2	1.39
23279	6548	Sisma X SLV	55.2	0	0	0	2.3E2	1.39	23280	6548	Sisma Y SLV	0	55.2	0	0	2.3E2	1.39
23281	6548	Sisma X SLD	54.3	0	0	0	2.3E2	1.39	23282	6548	Sisma Y SLD	0	54.3	0	0	2.3E2	1.39
23283	6549	Sisma X SLV	55.3	0	0	0	2.3E2	1.39	23284	6549	Sisma Y SLV	0	55.3	0	0	2.3E2	1.39
23285	6549	Sisma X SLD	54.4	0	0	0	2.3E2	1.39	23286	6549	Sisma Y SLD	0	54.4	0	0	2.3E2	1.39
23287	6550	Sisma X SLV	52.2	0	0	0	2.2E2	1.39	23288	6550	Sisma Y SLV	0	52.2	0	0	2.2E2	1.39
23289	6550	Sisma X SLD	51.3	0	0	0	2.2E2	1.39	23290	6550	Sisma Y SLD	0	51.3	0	0	2.2E2	1.39
23291	6551	Sisma X SLV	56.7	0	0	0	2.4E2	1.39	23292	6551	Sisma Y SLV	0	56.7	0	0	2.4E2	1.39
23293	6551	Sisma X SLD	55.8	0	0	0	2.4E2	1.39	23294	6551	Sisma Y SLD	0	55.8	0	0	2.4E2	1.39
23295	6552	Sisma X SLV	56.7	0	0	0	2.4E2	1.39	23296	6552	Sisma Y SLV	0	56.7	0	0	2.4E2	1.39
23297	6552	Sisma X SLD	55.8	0	0	0	2.4E2	1.39	23298	6552	Sisma Y SLD	0	55.8	0	0	2.4E2	1.39
23299	6553	Sisma X SLV	51	0	0	0	215.01	1.39	23300	6553	Sisma Y SLV	0	51	0	0	215.01	1.39
23301	6553	Sisma X SLD	50.2	0	0	0	215.01	1.39	23302	6553	Sisma Y SLD	0	50.2	0	0	215.01	1.39
23303	6554	Sisma X SLV	56.7	0	0	0	2.4E2	1.39	23304	6554	Sisma Y SLV	0	56.7	0	0	2.4E2	1.39
23305	6554	Sisma X SLD	55.8	0	0	0	2.4E2	1.39	23306	6554	Sisma Y SLD	0	55.8	0	0	2.4E2	1.39
23307	6555	Sisma X SLV	56.9	0	0	0	2.4E2	1.39	23308	6555	Sisma Y SLV	0	56.9	0	0	2.4E2	1.39
23309	6555	Sisma X SLD	56	0	0	0	2.4E2	1.39	23310	6555	Sisma Y SLD	0	56	0	0	2.4E2	1.39
23311	6556	Sisma X SLV	55.3	0	0	0	2.3E2	1.39	23312	6556	Sisma Y SLV	0	55.3	0	0	2.3E2	1.39
23313	6556	Sisma X SLD	54.4	0	0	0	2.3E2	1.39	23314	6556	Sisma Y SLD	0	54.4	0	0	2.3E2	1.39
23315	6557	Sisma X SLV	55.3	0	0	0	2.3E2	1.39	23316	6557	Sisma Y SLV	0	55.3	0	0	2.3E2	1.39
23317	6557	Sisma X SLD	54.4	0	0	0	2.3E2	1.39	23318	6557	Sisma Y SLD	0	54.4	0	0	2.3E2	1.39
23319	6558	Sisma X SLV	34.5	0	0	0	1.5E2	1.39	23320	6558	Sisma Y SLV	0	34.5	0	0	1.5E2	1.39
23321	6558	Sisma X SLD	34	0	0	0	1.5E2	1.39	23322	6558	Sisma Y SLD	0	34	0	0	1.5E2	1.39
23323	6559	Sisma X SLV	54.5	0	0	0	2.3E2	1.39	23324	6559	Sisma Y SLV	0	54.5	0	0	2.3E2	1.39
23325	6559	Sisma X SLD	53.6	0	0	0	2.3E2	1.39	23326	6559	Sisma Y SLD	0	53.6	0	0	2.3E2	1.39
23327	6560	Sisma X SLV	59.7	0	0	0	2.5E2	1.39	23328	6560	Sisma Y SLV	0	59.7	0	0	2.5E2	1.39
23329	6560	Sisma X SLD	58.8	0	0	0	2.5E2	1.39	23330	6560	Sisma Y SLD	0	58.8	0	0	2.5E2	1.39
23331	6561	Sisma X SLV	60.3	0	0	0	2.5E2	1.39	23332	6561	Sisma Y SLV	0	60.3	0	0	2.5E2	1.39
23333	6561	Sisma X SLD	59.3	0	0	0	2.5E2	1.39	23334	6561	Sisma Y SLD	0	59.3	0	0	2.5E2	1.39
23335	6562	Sisma X SLV	58	0	0	0	2.4E2	1.39	23336	6562	Sisma Y SLV	0	58	0	0	2.4E2	1.39
23337	6562	Sisma X SLD	57.1	0	0	0	2.4E2	1.39	23338	6562	Sisma Y SLD	0	57.1	0	0	2.4E2	1.39
23339	6563	Sisma X SLV	59.2	0	0	0	2.5E2	1.39	23340	6563	Sisma Y SLV	0	59.2	0	0	2.5E2	1.39
23341	6563	Sisma X SLD	58.3	0	0	0	2.5E2	1.39	23342	6563	Sisma Y SLD	0	58.3	0	0	2.5E2	1.39
23343	6564	Sisma X SLV	59.1	0	0	0	2.5E2	1.39	23344	6564	Sisma Y SLV	0	59.1	0	0	2.5E2	1.39
23345	6564	Sisma X SLD	58.2	0	0	0	2.5E2	1.39	23346	6564	Sisma Y SLD	0	58.2	0	0	2.5E2	1.39
23347	6565	Sisma X SLV	52.9	0	0	0	2.2E2	1.39	23348	6565	Sisma Y SLV	0	52.9	0	0	2.2E2	1.39
23349	6565	Sisma X SLD	52.1	0	0	0	2.2E2	1.39	23350	6565	Sisma Y SLD	0	52.1	0	0	2.2E2	1.39
23351	6566	Sisma X SLV	56.5	0	0	0	2.4E2	1.39	23352	6566	Sisma Y SLV	0	56.5	0	0	2.4E2	1.39
23353	6566	Sisma X SLD	55.6	0	0	0	2.4E2	1.39	23354	6566	Sisma Y SLD	0	55.6	0	0	2.4E2	1.39
23355	6567	Sisma X SLV	56.6	0	0	0	2.4E2	1.39	23356	6567	Sisma Y SLV	0	56.6	0	0	2.4E2	1.39
23357	6567	Sisma X SLD	55.7	0	0	0	2.4E2	1.39	23358	6567	Sisma Y SLD	0	55.7	0	0	2.4E2	1.39
23359	6568	Sisma X SLV	54	0	0	0	2.3E2	1.39	23360	6568	Sisma Y SLV	0	54	0	0	2.3E2	1.39
23361	6568	Sisma X SLD	53.2	0	0	0	2.3E2	1.39	23362	6568	Sisma Y SLD	0	53.2	0	0	2.3E2	1.39
23363	6569	Sisma X SLV	52.7	0	0	0	2.2E2	1.39	23364	6569	Sisma Y SLV	0	52.7	0	0	2.2E2	1.39
23365	6569	Sisma X SLD	51.9	0	0	0	2.2E2	1.39	23366	6569	Sisma Y SLD	0	51.9	0	0	2.2E2	1.39
23367	6570	Sisma X SLV	60.7	0	0	0	2.6E2	1.39	23368	6570	Sisma Y SLV	0	60.7	0	0	2.6E2	1.39
23369	6570	Sisma X SLD	59.7	0	0	0	2.6E2	1.39	23370	6570	Sisma Y SLD	0	59.7	0	0	2.6E2	1.39
23371	6571	Sisma X SLV	34.8	0	0	0	1.5E2	1.39	23372	6571	Sisma Y SLV	0	34.8	0	0	1.5E2	1.39
23373	6571	Sisma X SLD	34.2	0	0	0	1.5E2	1.39	23374	6571	Sisma Y SLD	0	34.2	0	0	1.5E2	1.39
23375	6572	Sisma X SLV	50	0	0	0	2.1E2	1.39	23376	6572	Sisma Y SLV	0	50	0	0	2.1E2	1.39
23377	6572	Sisma X SLD	49.2	0	0	0	2.1E2	1.39	23378	6572	Sisma Y SLD	0	49.2	0	0	2.1E2	1.39
23379	6573	Sisma X SLV	49.3	0	0	0	2.1E2	1.391	23380	6573	Sisma Y SLV	0	49.3	0	0	2.1E2	1.391
23381	6573	Sisma X SLD	48.5	0	0	0	2.1E2	1.391	23382	6573	Sisma Y SLD	0	48.5	0	0	2.1E2	1.391
23383	6574	Sisma X SLV	58.8	0	0	0	2.5E2	1.391	23384	6574	Sisma Y SLV	0	58.8	0	0	2.5E2	1.391
23385	6574	Sisma X SLD	57.9	0	0	0	2.5E2	1.391	23386	6574	Sisma Y SLD	0	57.9	0	0	2.5E2	1.391
23387	6575	Sisma X SLV	34.5	0	0	0	1.5E2	1.391	23388	6575	Sisma Y SLV	0	34.5	0	0	1.5E2	1.391
23389	6575	Sisma X SLD	34	0	0	0	1.5E2	1.391	23390	6575	Sisma Y SLD	0	34	0	0	1.5E2	1.391
23391	6576	Sisma X SLV	34.5	0	0	0	145.4	1.391	23392	6576	Sisma Y SLV	0	34.5	0	0	145.4	1.391
23393	6576	Sisma X SLD	34	0	0	0	145.4	1.391	23394	6576	Sisma Y SLD	0	34	0	0	145.4	1.391
23395	6577	Sisma X SLV	34.5	0	0	0	1.5E2	1.391	23396	6577	Sisma Y SLV	0	34.5	0	0	1.5E2	1.391
23397	6577	Sisma X SLD	34	0	0	0	1.5E2	1.391	23398	6577	Sisma Y SLD	0	34	0	0	1.5E2	1.391
23399	6578	Sisma X SLV	34.5	0	0	0	1.5E2	1.391	23400	6578	Sisma Y SLV	0	34.5	0	0	1.5E2	1.391
23401	6578	Sisma X SLD	34	0	0	0	1.5E2	1.391	23402	6578	Sisma Y SLD	0	34	0	0	1.5E2	1.391
23403	6579	Sisma X SLV	34.5	0	0	0	1.5E2	1.391	23404	6579	Sisma Y SLV	0	34.5	0	0	1.5E2	1.391
23405	6579	Sisma X SLD	34	0	0	0	1.5E2	1.391	23406	6579	Sisma Y SLD	0	34	0	0	1.5E2	1.391
23407	6580	Sisma X SLV	34.5	0	0	0	145.39	1.391	23408	6580	Sisma Y SLV	0	34.5	0	0	145.39	1.391
23409	6580	Sisma X SLD	34	0	0	0	145.39	1.391	23410	6580	Sisma Y SLD	0	34	0	0	145.39	1.391
23411	6581	Sisma X SLV	34.6	0	0	0	1.5E2	1.391	23412	6581	Sisma Y SLV	0	34.6	0	0	1.5E2	1.391
23413	6581	Sisma X SLD	34.1	0	0	0	1.5E2	1.391	23414	6581	Sisma Y SLD	0	34.1	0	0	1.5E2	1.391
23415	6582	Sisma X SLV	34.5	0	0	0	1.5E2	1.391	23416	6582	Sisma Y SLV	0	34.5	0	0	1.5E2	1.391
23417	6582	Sisma X SLD	33.9	0	0	0	1.5E2	1.391	23418	6582	Sisma Y SLD	0	33.9	0	0	1.5E2	1.391
23419	6583	Sisma X SLV	34.8	0	0	0	1.5E2	1.391	23420	6583	Sisma Y SLV	0	34.8	0	0	1.5E2	1.391
23421	6583	Sisma X SLD	34.3	0	0	0	1.5E2	1.391	23422	6583	Sisma Y SLD	0	34.3	0	0	1.5E2	1.391
23423	6584	Sisma X SLV	52.9	0	0	0	2.2E2	1.391	23424	6584	Sisma Y SLV	0	52.9	0	0	2.2E2	1.391
23425	6584	Sisma X SLD	52.1	0	0	0	2.2E2	1.391	23426	6584	Sisma Y SLD	0	52.1	0	0	2.2E2	1.391
23427	6585	Sisma X SLV	51.6	0	0	0	2.2E2	1.391	23428	6585	Sisma Y SLV	0	51.6	0	0	2.2E2	1.391
23429	6585	Sisma X SLD	50.8	0	0	0	2.2E2	1.391	23430	6585	Sisma Y SLD	0	50.8	0	0	2.2E2	1.391
23431	6586	Sisma X SLV	34.5	0	0	0	1.5E2	1.391	23432	6586	Sisma Y SLV	0	34.5	0	0	1.5E2	1.391
23433	6586	Sisma X SLD	33.9	0	0	0	1.5E2	1.391	23434	6586	Sisma Y SLD	0	33.9	0	0	1.5E2	1.391
23435	6587	Sisma X SLV	35.1	0	0	0	1.5E2	1.391	23436	6587	Sisma Y SLV	0	35.1	0	0	1.5E2	1.391
23437	6587	Sisma X SLD	34.6	0	0	0	1.5E2	1.391	23438	6587	Sisma Y SLD	0	34.6	0	0	1.5E2	1.391
23439	6588	Sisma X SLV	60.6	0	0	0	2.6E2	1.391	23440	6588	Sisma Y SLV	0	60.6	0	0	2.6E2	1.391
23441	6588	Sisma X SLD	59.7	0	0	0	2.6E2	1.391	23442	6588	Sisma Y SLD	0	59.7	0	0	2.6E2	1.391
23443	6589	Sisma X SLV	34.5	0	0	0	1.5E2	1.391	23444	6589	Sisma Y SLV	0	34.5	0	0	1.5E2	1.391
23445	6589	Sisma X SLD	33.9	0	0	0	1.5E2	1.391	23446	6589	Sisma Y SLD	0	33.9	0	0	1.5E2	1.391
23447	6590	Sisma X SLV	35.4	0	0	0	1.5E2	1.391	23448	6590	Sisma Y SLV	0	35.4	0	0	1.5E2	1.391
23449	6590	Sisma X SLD	34.8	0	0	0	1.5E2	1.391	23450	6590	Sisma Y SLD	0	34.8	0	0	1.5E2	1.391
23451	6591	Sisma X SLV	55.7	0	0	0	2.3E2	1.391	23452	6591	Sisma Y SLV	0	55.7	0	0	2.3E2	1.391
23453	6591	Sisma X SLD	54.8	0	0	0	2.3E2	1.391	23454	6591	Sisma Y SLD	0	54.8	0	0	2.3E2	1.391
23455	6592	Sisma X SLV	57.2	0	0	0	2.4E2	1.391	23456	6592	Sisma Y SLV	0	57.2	0	0	2.4E2	1.391
23457	6592	Sisma X SLD	56.3	0	0	0	2.4E2	1.391	23458	6592	Sisma Y SLD	0	56.3	0	0	2.4E2	1.391
23459	6593	Sisma X SLV	62.8	0	0	0	2.6E2	1.391	23460	6593	Sisma Y SLV	0	62.8	0	0	2.6E2	1.391
23461	6593	Sisma X SLD	61.8	0	0	0	2.6E2	1.391	23462	6593	Sisma Y SLD	0	61.8	0	0	2.6E2	1.391
23463	6594	Sisma X SLV	61.8	0	0	0	2.6E2	1.391	23464	6594	Sisma Y SLV	0	61.8	0	0	2.6E2	1.391
23465	6594	Sisma X SLD	60.8	0	0	0	2.6E2	1.391	23466	6594	Sisma Y SLD	0	60.8	0	0	2.6E2	1.391

Indice	Nodo	Condizione	Fx	Fy	Fz	Mz	Peso	Gamma	Indice	Nodo	Condizione	Fx	Fy	Fz	Mz	Peso	Gamma
23467	6595	Sisma X SLV	53.8	0	0	0	2.3E2	1.391	23468	6595	Sisma Y SLV	0	53.8	0	0	2.3E2	1.391
23469	6595	Sisma X SLD	53	0	0	0	2.3E2	1.391	23470	6595	Sisma Y SLD	0	53	0	0	2.3E2	1.391
23471	6596	Sisma X SLV	67	0	0	0	2.8E2	1.391	23472	6596	Sisma Y SLV	0	67	0	0	2.8E2	1.391
23473	6596	Sisma X SLD	66	0	0	0	2.8E2	1.391	23474	6596	Sisma Y SLD	0	66	0	0	2.8E2	1.391
23475	6597	Sisma X SLV	63.5	0	0	0	2.7E2	1.391	23476	6597	Sisma Y SLV	0	63.5	0	0	2.7E2	1.391
23477	6597	Sisma X SLD	62.5	0	0	0	2.7E2	1.391	23478	6597	Sisma Y SLD	0	62.5	0	0	2.7E2	1.391
23479	6598	Sisma X SLV	15.1	0	0	0	63.526	1.391	23480	6598	Sisma Y SLV	0	15.1	0	0	63.526	1.391
23481	6598	Sisma X SLD	14.8	0	0	0	63.526	1.391	23482	6598	Sisma Y SLD	0	14.8	0	0	63.526	1.391
23483	6599	Sisma X SLV	52.9	0	0	0	222.99	1.391	23484	6599	Sisma Y SLV	0	52.9	0	0	222.99	1.391
23485	6599	Sisma X SLD	52.1	0	0	0	222.99	1.391	23486	6599	Sisma Y SLD	0	52.1	0	0	222.99	1.391
23487	6600	Sisma X SLV	52.7	0	0	0	2.2E2	1.391	23488	6600	Sisma Y SLV	0	52.7	0	0	2.2E2	1.391
23489	6600	Sisma X SLD	51.8	0	0	0	2.2E2	1.391	23490	6600	Sisma Y SLD	0	51.8	0	0	2.2E2	1.391
23491	6601	Sisma X SLV	53.4	0	0	0	2.2E2	1.391	23492	6601	Sisma Y SLV	0	53.4	0	0	2.2E2	1.391
23493	6601	Sisma X SLD	52.5	0	0	0	2.2E2	1.391	23494	6601	Sisma Y SLD	0	52.5	0	0	2.2E2	1.391
23495	6602	Sisma X SLV	78.6	0	0	0	3.3E2	1.391	23496	6602	Sisma Y SLV	0	78.6	0	0	3.3E2	1.391
23497	6602	Sisma X SLD	77.4	0	0	0	3.3E2	1.391	23498	6602	Sisma Y SLD	0	77.4	0	0	3.3E2	1.391
23499	6603	Sisma X SLV	71.2	0	0	0	3.0E2	1.391	23500	6603	Sisma Y SLV	0	71.2	0	0	3.0E2	1.391
23501	6603	Sisma X SLD	70.1	0	0	0	3.0E2	1.391	23502	6603	Sisma Y SLD	0	70.1	0	0	3.0E2	1.391
23503	6604	Sisma X SLV	74.3	0	0	0	3.1E2	1.391	23504	6604	Sisma Y SLV	0	74.3	0	0	3.1E2	1.391
23505	6604	Sisma X SLD	73.1	0	0	0	3.1E2	1.391	23506	6604	Sisma Y SLD	0	73.1	0	0	3.1E2	1.391
23507	6605	Sisma X SLV	73.8	0	0	0	311.1	1.391	23508	6605	Sisma Y SLV	0	73.8	0	0	311.1	1.391
23509	6605	Sisma X SLD	72.7	0	0	0	311.1	1.391	23510	6605	Sisma Y SLD	0	72.7	0	0	311.1	1.391
23511	6606	Sisma X SLV	81.9	0	0	0	3.4E2	1.391	23512	6606	Sisma Y SLV	0	81.9	0	0	3.4E2	1.391
23513	6606	Sisma X SLD	80.6	0	0	0	3.4E2	1.391	23514	6606	Sisma Y SLD	0	80.6	0	0	3.4E2	1.391
23515	6607	Sisma X SLV	88.5	0	0	0	3.7E2	1.391	23516	6607	Sisma Y SLV	0	88.5	0	0	3.7E2	1.391
23517	6607	Sisma X SLD	87.1	0	0	0	3.7E2	1.391	23518	6607	Sisma Y SLD	0	87.1	0	0	3.7E2	1.391
23519	6608	Sisma X SLV	54.8	0	0	0	230.78	1.391	23520	6608	Sisma Y SLV	0	54.8	0	0	230.78	1.391
23521	6608	Sisma X SLD	53.9	0	0	0	230.78	1.391	23522	6608	Sisma Y SLD	0	53.9	0	0	230.78	1.391
23523	6609	Sisma X SLV	35.3	0	0	0	1.5E2	1.391	23524	6609	Sisma Y SLV	0	35.3	0	0	1.5E2	1.391
23525	6609	Sisma X SLD	34.7	0	0	0	1.5E2	1.391	23526	6609	Sisma Y SLD	0	34.7	0	0	1.5E2	1.391
23527	6610	Sisma X SLV	35.2	0	0	0	1.5E2	1.391	23528	6610	Sisma Y SLV	0	35.2	0	0	1.5E2	1.391
23529	6610	Sisma X SLD	34.7	0	0	0	1.5E2	1.391	23530	6610	Sisma Y SLD	0	34.7	0	0	1.5E2	1.391
23531	6611	Sisma X SLV	35.2	0	0	0	1.5E2	1.391	23532	6611	Sisma Y SLV	0	35.2	0	0	1.5E2	1.391
23533	6611	Sisma X SLD	34.6	0	0	0	1.5E2	1.391	23534	6611	Sisma Y SLD	0	34.6	0	0	1.5E2	1.391
23535	6612	Sisma X SLV	55.2	0	0	0	2.3E2	1.392	23536	6612	Sisma Y SLV	0	55.2	0	0	2.3E2	1.392
23537	6612	Sisma X SLD	54.3	0	0	0	2.3E2	1.392	23538	6612	Sisma Y SLD	0	54.3	0	0	2.3E2	1.392
23539	6613	Sisma X SLV	35.3	0	0	0	1.5E2	1.392	23540	6613	Sisma Y SLV	0	35.3	0	0	1.5E2	1.392
23541	6613	Sisma X SLD	34.7	0	0	0	1.5E2	1.392	23542	6613	Sisma Y SLD	0	34.7	0	0	1.5E2	1.392
23543	6614	Sisma X SLV	31.9	0	0	0	1.3E2	1.392	23544	6614	Sisma Y SLV	0	31.9	0	0	1.3E2	1.392
23545	6614	Sisma X SLD	31.4	0	0	0	1.3E2	1.392	23546	6614	Sisma Y SLD	0	31.4	0	0	1.3E2	1.392
23547	6615	Sisma X SLV	14.8	0	0	0	62.286	1.392	23548	6615	Sisma Y SLV	0	14.8	0	0	62.286	1.392
23549	6615	Sisma X SLD	14.6	0	0	0	62.286	1.392	23550	6615	Sisma Y SLD	0	14.6	0	0	62.286	1.392
23551	6616	Sisma X SLV	14.8	0	0	0	62.286	1.392	23552	6616	Sisma Y SLV	0	14.8	0	0	62.286	1.392
23553	6616	Sisma X SLD	14.6	0	0	0	62.286	1.392	23554	6616	Sisma Y SLD	0	14.6	0	0	62.286	1.392
23555	6617	Sisma X SLV	35	0	0	0	1.5E2	1.392	23556	6617	Sisma Y SLV	0	35	0	0	1.5E2	1.392
23557	6617	Sisma X SLD	34.4	0	0	0	1.5E2	1.392	23558	6617	Sisma Y SLD	0	34.4	0	0	1.5E2	1.392
23559	6618	Sisma X SLV	34.7	0	0	0	1.5E2	1.393	23560	6618	Sisma Y SLV	0	34.7	0	0	1.5E2	1.393
23561	6618	Sisma X SLD	34.2	0	0	0	1.5E2	1.393	23562	6618	Sisma Y SLD	0	34.2	0	0	1.5E2	1.393
23563	6619	Sisma X SLV	54.9	0	0	0	230.86	1.393	23564	6619	Sisma Y SLV	0	54.9	0	0	230.86	1.393
23565	6619	Sisma X SLD	54	0	0	0	230.86	1.393	23566	6619	Sisma Y SLD	0	54	0	0	230.86	1.393
23567	6620	Sisma X SLV	54.9	0	0	0	230.86	1.393	23568	6620	Sisma Y SLV	0	54.9	0	0	230.86	1.393
23569	6620	Sisma X SLD	54	0	0	0	230.86	1.393	23570	6620	Sisma Y SLD	0	54	0	0	230.86	1.393
23571	6621	Sisma X SLV	31.8	0	0	0	1.3E2	1.393	23572	6621	Sisma Y SLV	0	31.8	0	0	1.3E2	1.393
23573	6621	Sisma X SLD	31.3	0	0	0	1.3E2	1.393	23574	6621	Sisma Y SLD	0	31.3	0	0	1.3E2	1.393
23575	6622	Sisma X SLV	56	0	0	0	2.4E2	1.393	23576	6622	Sisma Y SLV	0	56	0	0	2.4E2	1.393
23577	6622	Sisma X SLD	55.1	0	0	0	2.4E2	1.393	23578	6622	Sisma Y SLD	0	55.1	0	0	2.4E2	1.393
23579	6623	Sisma X SLV	34.3	0	0	0	1.4E2	1.393	23580	6623	Sisma Y SLV	0	34.3	0	0	1.4E2	1.393
23581	6623	Sisma X SLD	33.8	0	0	0	1.4E2	1.393	23582	6623	Sisma Y SLD	0	33.8	0	0	1.4E2	1.393
23583	6624	Sisma X SLV	33.7	0	0	0	1.4E2	1.394	23584	6624	Sisma Y SLV	0	33.7	0	0	1.4E2	1.394
23585	6624	Sisma X SLD	33.2	0	0	0	1.4E2	1.394	23586	6624	Sisma Y SLD	0	33.2	0	0	1.4E2	1.394
23587	6625	Sisma X SLV	31.7	0	0	0	133.37	1.394	23588	6625	Sisma Y SLV	0	31.7	0	0	133.37	1.394
23589	6625	Sisma X SLD	31.2	0	0	0	133.37	1.394	23590	6625	Sisma Y SLD	0	31.2	0	0	133.37	1.394
23591	6626	Sisma X SLV	62.8	0	0	0	2.6E2	1.394	23592	6626	Sisma Y SLV	0	62.8	0	0	2.6E2	1.394
23593	6626	Sisma X SLD	61.8	0	0	0	2.6E2	1.394	23594	6626	Sisma Y SLD	0	61.8	0	0	2.6E2	1.394
23595	6627	Sisma X SLV	36.8	0	0	0	1.5E2	1.394	23596	6627	Sisma Y SLV	0	36.8	0	0	1.5E2	1.394
23597	6627	Sisma X SLD	36.2	0	0	0	1.5E2	1.394	23598	6627	Sisma Y SLD	0	36.2	0	0	1.5E2	1.394
23599	6628	Sisma X SLV	30	0	0	0	1.3E2	1.394	23600	6628	Sisma Y SLV	0	30	0	0	1.3E2	1.394
23601	6628	Sisma X SLD	29.5	0	0	0	1.3E2	1.394	23602	6628	Sisma Y SLD	0	29.5	0	0	1.3E2	1.394
23603	6629	Sisma X SLV	56.9	0	0	0	2.4E2	1.394	23604	6629	Sisma Y SLV	0	56.9	0	0	2.4E2	1.394
23605	6629	Sisma X SLD	56	0	0	0	2.4E2	1.394	23606	6629	Sisma Y SLD	0	56	0	0	2.4E2	1.394
23607	6630	Sisma X SLV	43.5	0	0	0	1.8E2	1.394	23608	6630	Sisma Y SLV	0	43.5	0	0	1.8E2	1.394
23609	6630	Sisma X SLD	42.8	0	0	0	1.8E2	1.394	23610	6630	Sisma Y SLD	0	42.8	0	0	1.8E2	1.394
23611	6631	Sisma X SLV	56.9	0	0	0	2.4E2	1.394	23612	6631	Sisma Y SLV	0	56.9	0	0	2.4E2	1.394
23613	6631	Sisma X SLD	56	0	0	0	2.4E2	1.394	23614	6631	Sisma Y SLD	0	56	0	0	2.4E2	1.394
23615	6632	Sisma X SLV	33	0	0	0	1.4E2	1.394	23616	6632	Sisma Y SLV	0	33	0	0	1.4E2	1.394
23617	6632	Sisma X SLD	32.5	0	0	0	1.4E2	1.394	23618	6632	Sisma Y SLD	0	32.5	0	0	1.4E2	1.394
23619	6633	Sisma X SLV	31.9	0	0	0	1.3E2	1.394	23620	6633	Sisma Y SLV	0	31.9	0	0	1.3E2	1.394
23621	6633	Sisma X SLD	31.4	0	0	0	1.3E2	1.394	23622	6633	Sisma Y SLD	0	31.4	0	0	1.3E2	1.394
23623	6634	Sisma X SLV	32.4	0	0	0	1.4E2	1.395	23624	6634	Sisma Y SLV	0	32.4	0	0	1.4E2	1.395
23625	6634	Sisma X SLD	31.8	0	0	0	1.4E2	1.395	23626	6634	Sisma Y SLD	0	31.8	0	0	1.4E2	1.395
23627	6635	Sisma X SLV	48.3	0	0	0	2.0E2	1.395	23628	6635	Sisma Y SLV	0	48.3	0	0	2.0E2	1.395
23629	6635	Sisma X SLD	47.5	0	0	0	2.0E2	1.395	23630	6635	Sisma Y SLD	0	47.5	0	0	2.0E2	1.395
23631	6636	Sisma X SLV	48.3	0	0	0	2.0E2	1.395	23632	6636	Sisma Y SLV	0	48.3	0	0	2.0E2	1.395
23633	6636	Sisma X SLD	47.5	0	0	0	2.0E2	1.395	23634	6636	Sisma Y SLD	0	47.5	0	0	2.0E2	1.395
23635	6637	Sisma X SLV	34.9	0	0	0	1.5E2	1.395	23636	6637	Sisma Y SLV	0	34.9	0	0	1.5E2	1.395
23637	6637	Sisma X SLD	34.3	0	0	0	1.5E2	1.395	23638	6637	Sisma Y SLD	0	34.3	0	0	1.5E2	1.395
23639	6638	Sisma X SLV	15.5	0	0	0	65.103	1.396	23640	6638	Sisma Y SLV	0	15.5	0	0	65.103	1.396
23641	6638	Sisma X SLD	15.3	0	0	0	65.103	1.396	23642	6638	Sisma Y SLD	0	15.3	0	0	65.103	1.396
23643	6639	Sisma X SLV	15.5	0	0	0	65.103	1.396	23644	6639	Sisma Y SLV	0	15.5	0	0	65.103	1.396
23645	6639	Sisma X SLD	15.3	0	0	0	65.103	1.396	23646	6639	Sisma Y SLD	0	15.3	0	0	65.103	1.396
23647	6640	Sisma X SLV	54.8	0	0	0	2.3E2	1.397	23648	6640	Sisma Y SLV	0	54.8	0	0	2.3E2	1.397
23649	6640	Sisma X SLD	53.9	0	0	0	2.3E2	1.397	23650	6640	Sisma Y SLD	0	53.9	0	0	2.3E2	1.397
23651	6641	Sisma X SLV	54.1	0	0	0	2.3E2	1.397	23652	6641	Sisma Y SLV	0	54.1	0	0	2.3E2	1.397
23653	6641	Sisma X SLD	53.3	0	0	0	2.3E2	1.397	23654	6641	Sisma Y SLD	0	53.3	0	0	2.3E2	1.397
23655	6642	Sisma X SLV	54.1	0	0	0	2.3E2	1.397	23656	6642	Sisma Y SLV	0	54.1	0	0	2.3E2	1.397
23657	6642	Sisma X SLD	53.3	0	0	0	2.3E2	1.397	23658	6642	Sisma Y SLD	0	53.3	0	0	2.3E2	1.397
23659	6643	Sisma X SLV	56.1	0	0	0	2.4E2	1.398	23660	6643	Sisma Y SLV	0	56.1	0	0	2.4E2	1.398
23661	6643	Sisma X SLD	55.2	0	0	0	2.4E2	1.398	23662	6643	Sisma Y SLD	0	55.2	0	0	2.4E2	1.398
23663	6644	Sisma X SLV	56.2	0	0	0	2.4E2	1.398	23664	6644	Sisma Y SLV	0	56.2	0	0	2.4E2	1.398
23665	6644	Sisma X SLD	55.3	0	0	0	2.4E2	1.398	23666	6644	Sisma Y SLD	0	55.3	0	0	2.4E2	1.398
23667	6645	Sisma X SLV	48	0	0	0	2.0E2	1.399	23668	6645	Sisma Y SLV	0	48	0	0	2.0E2	1.399
23669	6645	Sisma X SLD	47.2	0	0	0	2.0E2	1.399	23670	6645	Sisma Y SLD	0	47.2	0	0	2.0E2	1.399
23671	6646	Sisma X SLV	48	0	0	0	2.0E2	1.399	23672	6646	Sisma Y SLV	0	48	0	0	2.0E2	1.399
23673	6646	Sisma X SLD	47.2	0	0	0	2.0E2	1.399	23674	6646	Sisma Y SLD	0	47.2	0	0	2.0E2	1.399

Indice	Nodo	Condizione	Fx	Fy	Fz	Mz	Peso	Gamma	Indice	Nodo	Condizione	Fx	Fy	Fz	Mz	Peso	Gamma
23675	6647	Sisma X SLV	34.4	0	0	0	1.4E2	1.399	23676	6647	Sisma Y SLV	0	34.4	0	0	1.4E2	1.399
23677	6647	Sisma X SLD	33.8	0	0	0	1.4E2	1.399	23678	6647	Sisma Y SLD	0	33.8	0	0	1.4E2	1.399
23679	6648	Sisma X SLV	20.4	0	0	0	85.546	1.399	23680	6648	Sisma Y SLV	0	20.4	0	0	85.546	1.399
23681	6648	Sisma X SLD	20.1	0	0	0	85.546	1.399	23682	6648	Sisma Y SLD	0	20.1	0	0	85.546	1.399
23683	6649	Sisma X SLV	35.9	0	0	0	150.47	1.4	23684	6649	Sisma Y SLV	0	35.9	0	0	150.47	1.4
23685	6649	Sisma X SLD	35.4	0	0	0	150.47	1.4	23686	6649	Sisma Y SLD	0	35.4	0	0	150.47	1.4
23687	6650	Sisma X SLV	15.6	0	0	0	65.435	1.4	23688	6650	Sisma Y SLV	0	15.6	0	0	65.435	1.4
23689	6650	Sisma X SLD	15.4	0	0	0	65.435	1.4	23690	6650	Sisma Y SLD	0	15.4	0	0	65.435	1.4
23691	6651	Sisma X SLV	15.6	0	0	0	65.435	1.4	23692	6651	Sisma Y SLV	0	15.6	0	0	65.435	1.4
23693	6651	Sisma X SLD	15.4	0	0	0	65.435	1.4	23694	6651	Sisma Y SLD	0	15.4	0	0	65.435	1.4
23695	6652	Sisma X SLV	28.6	0	0	0	1.2E2	1.401	23696	6652	Sisma Y SLV	0	28.6	0	0	1.2E2	1.401
23697	6652	Sisma X SLD	28.2	0	0	0	1.2E2	1.401	23698	6652	Sisma Y SLD	0	28.2	0	0	1.2E2	1.401
23699	6653	Sisma X SLV	53.1	0	0	0	2.2E2	1.402	23700	6653	Sisma Y SLV	0	53.1	0	0	2.2E2	1.402
23701	6653	Sisma X SLD	52.2	0	0	0	2.2E2	1.402	23702	6653	Sisma Y SLD	0	52.2	0	0	2.2E2	1.402
23703	6654	Sisma X SLV	53.2	0	0	0	2.2E2	1.402	23704	6654	Sisma Y SLV	0	53.2	0	0	2.2E2	1.402
23705	6654	Sisma X SLD	52.3	0	0	0	2.2E2	1.402	23706	6654	Sisma Y SLD	0	52.3	0	0	2.2E2	1.402
23707	6655	Sisma X SLV	53.2	0	0	0	2.2E2	1.402	23708	6655	Sisma Y SLV	0	53.2	0	0	2.2E2	1.402
23709	6655	Sisma X SLD	52.3	0	0	0	2.2E2	1.402	23710	6655	Sisma Y SLD	0	52.3	0	0	2.2E2	1.402
23711	6656	Sisma X SLV	56.5	0	0	0	2.4E2	1.402	23712	6656	Sisma Y SLV	0	56.5	0	0	2.4E2	1.402
23713	6656	Sisma X SLD	55.6	0	0	0	2.4E2	1.402	23714	6656	Sisma Y SLD	0	55.6	0	0	2.4E2	1.402
23715	6657	Sisma X SLV	52.1	0	0	0	2.2E2	1.402	23716	6657	Sisma Y SLV	0	52.1	0	0	2.2E2	1.402
23717	6657	Sisma X SLD	51.3	0	0	0	2.2E2	1.402	23718	6657	Sisma Y SLD	0	51.3	0	0	2.2E2	1.402
23719	6658	Sisma X SLV	55	0	0	0	229.85	1.403	23720	6658	Sisma Y SLV	0	55	0	0	229.85	1.403
23721	6658	Sisma X SLD	54.1	0	0	0	229.85	1.403	23722	6658	Sisma Y SLD	0	54.1	0	0	229.85	1.403
23723	6659	Sisma X SLV	55.1	0	0	0	2.3E2	1.403	23724	6659	Sisma Y SLV	0	55.1	0	0	2.3E2	1.403
23725	6659	Sisma X SLD	54.2	0	0	0	2.3E2	1.403	23726	6659	Sisma Y SLD	0	54.2	0	0	2.3E2	1.403
23727	6660	Sisma X SLV	33.7	0	0	0	1.4E2	1.403	23728	6660	Sisma Y SLV	0	33.7	0	0	1.4E2	1.403
23729	6660	Sisma X SLD	33.1	0	0	0	1.4E2	1.403	23730	6660	Sisma Y SLD	0	33.1	0	0	1.4E2	1.403
23731	6661	Sisma X SLV	52.1	0	0	0	2.2E2	1.403	23732	6661	Sisma Y SLV	0	52.1	0	0	2.2E2	1.403
23733	6661	Sisma X SLD	51.3	0	0	0	2.2E2	1.403	23734	6661	Sisma Y SLD	0	51.3	0	0	2.2E2	1.403
23735	6662	Sisma X SLV	12.4	0	0	0	51.696	1.404	23736	6662	Sisma Y SLV	0	12.4	0	0	51.696	1.404
23737	6662	Sisma X SLD	12.2	0	0	0	51.696	1.404	23738	6662	Sisma Y SLD	0	12.2	0	0	51.696	1.404
23739	6663	Sisma X SLV	12.4	0	0	0	51.696	1.404	23740	6663	Sisma Y SLV	0	12.4	0	0	51.696	1.404
23741	6663	Sisma X SLD	12.2	0	0	0	51.696	1.404	23742	6663	Sisma Y SLD	0	12.2	0	0	51.696	1.404
23743	6664	Sisma X SLV	22.8	0	0	0	95.065	1.406	23744	6664	Sisma Y SLV	0	22.8	0	0	95.065	1.406
23745	6664	Sisma X SLD	22.4	0	0	0	95.065	1.406	23746	6664	Sisma Y SLD	0	22.4	0	0	95.065	1.406
23747	6665	Sisma X SLV	34.8	0	0	0	1.4E2	1.406	23748	6665	Sisma Y SLV	0	34.8	0	0	1.4E2	1.406
23749	6665	Sisma X SLD	34.2	0	0	0	1.4E2	1.406	23750	6665	Sisma Y SLD	0	34.2	0	0	1.4E2	1.406
23751	6666	Sisma X SLV	24.4	0	0	0	1.0E2	1.406	23752	6666	Sisma Y SLV	0	24.4	0	0	1.0E2	1.406
23753	6666	Sisma X SLD	24	0	0	0	1.0E2	1.406	23754	6666	Sisma Y SLD	0	24	0	0	1.0E2	1.406
23755	6667	Sisma X SLV	24.3	0	0	0	1.0E2	1.406	23756	6667	Sisma Y SLV	0	24.3	0	0	1.0E2	1.406
23757	6667	Sisma X SLD	23.9	0	0	0	1.0E2	1.406	23758	6667	Sisma Y SLD	0	23.9	0	0	1.0E2	1.406
23759	6668	Sisma X SLV	23.8	0	0	0	99.09	1.407	23760	6668	Sisma Y SLV	0	23.8	0	0	99.09	1.407
23761	6668	Sisma X SLD	23.4	0	0	0	99.09	1.407	23762	6668	Sisma Y SLD	0	23.4	0	0	99.09	1.407
23763	6669	Sisma X SLV	51	0	0	0	2.1E2	1.407	23764	6669	Sisma Y SLV	0	51	0	0	2.1E2	1.407
23765	6669	Sisma X SLD	50.2	0	0	0	2.1E2	1.407	23766	6669	Sisma Y SLD	0	50.2	0	0	2.1E2	1.407
23767	6670	Sisma X SLV	51.7	0	0	0	2.2E2	1.407	23768	6670	Sisma Y SLV	0	51.7	0	0	2.2E2	1.407
23769	6670	Sisma X SLD	50.9	0	0	0	2.2E2	1.407	23770	6670	Sisma Y SLD	0	50.9	0	0	2.2E2	1.407
23771	6671	Sisma X SLV	51.7	0	0	0	2.2E2	1.407	23772	6671	Sisma Y SLV	0	51.7	0	0	2.2E2	1.407
23773	6671	Sisma X SLD	50.9	0	0	0	2.2E2	1.407	23774	6671	Sisma Y SLD	0	50.9	0	0	2.2E2	1.407
23775	6672	Sisma X SLV	27.3	0	0	0	113.66	1.408	23776	6672	Sisma Y SLV	0	27.3	0	0	113.66	1.408
23777	6672	Sisma X SLD	26.9	0	0	0	113.66	1.408	23778	6672	Sisma Y SLD	0	26.9	0	0	113.66	1.408
23779	6673	Sisma X SLV	53.3	0	0	0	2.2E2	1.408	23780	6673	Sisma Y SLV	0	53.3	0	0	2.2E2	1.408
23781	6673	Sisma X SLD	52.5	0	0	0	2.2E2	1.408	23782	6673	Sisma Y SLD	0	52.5	0	0	2.2E2	1.408
23783	6674	Sisma X SLV	53.4	0	0	0	2.2E2	1.408	23784	6674	Sisma Y SLV	0	53.4	0	0	2.2E2	1.408
23785	6674	Sisma X SLD	52.5	0	0	0	2.2E2	1.408	23786	6674	Sisma Y SLD	0	52.5	0	0	2.2E2	1.408
23787	6675	Sisma X SLV	45.2	0	0	0	188.13	1.408	23788	6675	Sisma Y SLV	0	45.2	0	0	188.13	1.408
23789	6675	Sisma X SLD	44.5	0	0	0	188.13	1.408	23790	6675	Sisma Y SLD	0	44.5	0	0	188.13	1.408
23791	6676	Sisma X SLV	45.2	0	0	0	188.13	1.408	23792	6676	Sisma Y SLV	0	45.2	0	0	188.13	1.408
23793	6676	Sisma X SLD	44.5	0	0	0	188.13	1.408	23794	6676	Sisma Y SLD	0	44.5	0	0	188.13	1.408
23795	6677	Sisma X SLV	22.7	0	0	0	94.403	1.408	23796	6677	Sisma Y SLV	0	22.7	0	0	94.403	1.408
23797	6677	Sisma X SLD	22.3	0	0	0	94.403	1.408	23798	6677	Sisma Y SLD	0	22.3	0	0	94.403	1.408
23799	6678	Sisma X SLV	32.7	0	0	0	1.4E2	1.409	23800	6678	Sisma Y SLV	0	32.7	0	0	1.4E2	1.409
23801	6678	Sisma X SLD	32.1	0	0	0	1.4E2	1.409	23802	6678	Sisma Y SLD	0	32.1	0	0	1.4E2	1.409
23803	6679	Sisma X SLV	27.5	0	0	0	1.1E2	1.409	23804	6679	Sisma Y SLV	0	27.5	0	0	1.1E2	1.409
23805	6679	Sisma X SLD	27	0	0	0	1.1E2	1.409	23806	6679	Sisma Y SLD	0	27	0	0	1.1E2	1.409
23807	6680	Sisma X SLV	26.6	0	0	0	1.1E2	1.412	23808	6680	Sisma Y SLV	0	26.6	0	0	1.1E2	1.412
23809	6680	Sisma X SLD	26.2	0	0	0	1.1E2	1.412	23810	6680	Sisma Y SLD	0	26.2	0	0	1.1E2	1.412
23811	6681	Sisma X SLV	33.1	0	0	0	1.4E2	1.413	23812	6681	Sisma Y SLV	0	33.1	0	0	1.4E2	1.413
23813	6681	Sisma X SLD	32.5	0	0	0	1.4E2	1.413	23814	6681	Sisma Y SLD	0	32.5	0	0	1.4E2	1.413
23815	6682	Sisma X SLV	50.5	0	0	0	2.1E2	1.413	23816	6682	Sisma Y SLV	0	50.5	0	0	2.1E2	1.413
23817	6682	Sisma X SLD	49.7	0	0	0	2.1E2	1.413	23818	6682	Sisma Y SLD	0	49.7	0	0	2.1E2	1.413
23819	6683	Sisma X SLV	47.3	0	0	0	2.0E2	1.413	23820	6683	Sisma Y SLV	0	47.3	0	0	2.0E2	1.413
23821	6683	Sisma X SLD	46.5	0	0	0	2.0E2	1.413	23822	6683	Sisma Y SLD	0	46.5	0	0	2.0E2	1.413
23823	6684	Sisma X SLV	21	0	0	0	87.273	1.413	23824	6684	Sisma Y SLV	0	21	0	0	87.273	1.413
23825	6684	Sisma X SLD	20.7	0	0	0	87.273	1.413	23826	6684	Sisma Y SLD	0	20.7	0	0	87.273	1.413
23827	6685	Sisma X SLV	48.5	0	0	0	2.0E2	1.414	23828	6685	Sisma Y SLV	0	48.5	0	0	2.0E2	1.414
23829	6685	Sisma X SLD	47.7	0	0	0	2.0E2	1.414	23830	6685	Sisma Y SLD	0	47.7	0	0	2.0E2	1.414
23831	6686	Sisma X SLV	49.3	0	0	0	2.0E2	1.414	23832	6686	Sisma Y SLV	0	49.3	0	0	2.0E2	1.414
23833	6686	Sisma X SLD	48.5	0	0	0	2.0E2	1.414	23834	6686	Sisma Y SLD	0	48.5	0	0	2.0E2	1.414
23835	6687	Sisma X SLV	49.3	0	0	0	2.0E2	1.414	23836	6687	Sisma Y SLV	0	49.3	0	0	2.0E2	1.414
23837	6687	Sisma X SLD	48.5	0	0	0	2.0E2	1.414	23838	6687	Sisma Y SLD	0	48.5	0	0	2.0E2	1.414
23839	6688	Sisma X SLV	50.7	0	0	0	2.1E2	1.414	23840	6688	Sisma Y SLV	0	50.7	0	0	2.1E2	1.414
23841	6688	Sisma X SLD	49.9	0	0	0	2.1E2	1.414	23842	6688	Sisma Y SLD	0	49.9	0	0	2.1E2	1.414
23843	6689	Sisma X SLV	15.3	0	0	0	63.431	1.414	23844	6689	Sisma Y SLV	0	15.3	0	0	63.431	1.414
23845	6689	Sisma X SLD	15.1	0	0	0	63.431	1.414	23846	6689	Sisma Y SLD	0	15.1	0	0	63.431	1.414
23847	6690	Sisma X SLV	15.3	0	0	0	63.431	1.414	23848	6690	Sisma Y SLV	0	15.3	0	0	63.431	1.414
23849	6690	Sisma X SLD	15.1	0	0	0	63.431	1.414	23850	6690	Sisma Y SLD	0	15.1	0	0	63.431	1.414
23851	6691	Sisma X SLV	47.4	0	0	0	2.0E2	1.414	23852	6691	Sisma Y SLV	0	47.4	0	0	2.0E2	1.414
23853	6691	Sisma X SLD	46.7	0	0	0	2.0E2	1.414	23854	6691	Sisma Y SLD	0	46.7	0	0	2.0E2	1.414
23855	6692	Sisma X SLV	50.8	0	0	0	2.1E2	1.414	23856	6692	Sisma Y SLV	0	50.8	0	0	2.1E2	1.414
23857	6692	Sisma X SLD	50	0	0	0	2.1E2	1.414	23858	6692	Sisma Y SLD	0	50	0	0	2.1E2	1.414
23859	6693	Sisma X SLV	31.2	0	0	0	1.3E2	1.414	23860	6693	Sisma Y SLV	0	31.2	0	0	1.3E2	1.414
23861	6693	Sisma X SLD	30.7	0	0	0	1.3E2	1.414	23862	6693	Sisma Y SLD	0	30.7	0	0	1.3E2	1.414
23863	6694	Sisma X SLV	16.6	0	0	0	68.796	1.415	23864	6694	Sisma Y SLV	0	16.6	0	0	68.796	1.415
23865	6694	Sisma X SLD	16.3	0	0	0	68.796	1.415	23866	6694	Sisma Y SLD	0	16.3	0	0	68.796	1.415
23867	6695	Sisma X SLV	16.6	0	0	0	68.796	1.415	23868	6695	Sisma Y SLV	0	16.6	0	0	68.796	1.415
23869	6695	Sisma X SLD	16.3	0	0	0	68.796	1.415	23870	6695	Sisma Y SLD	0	16.3	0	0	68.796	1.415
23871	6696	Sisma X SLV	43.1	0	0	0	1.8E2	1.417	23872	6696	Sisma Y SLV	0	43.1	0	0	1.8E2	1.417
23873	6696	Sisma X SLD	42.4	0	0	0	1.8E2	1.417	23874	6696	Sisma Y SLD	0	42.4	0	0	1.8E2	1.417
23875	6697	Sisma X SLV	43.1	0	0	0	1.8E2	1.417	23876	6697	Sisma Y SLV	0	43.1	0	0	1.8E2	1.417

Indice	Nodo	Condizione	Fx	Fy	Fz	Mz	Peso	Gamma	Indice	Nodo	Condizione	Fx	Fy	Fz	Mz	Peso	Gamma
23877	6697	Sisma X SLD	42.4	0	0	0	1.8E2	1.417	23878	6697	Sisma Y SLD	0	42.4	0	0	1.8E2	1.417
23879	6698	Sisma X SLV	41.6	0	0	0	1.7E2	1.417	23880	6698	Sisma Y SLV	0	41.6	0	0	1.7E2	1.417
23881	6698	Sisma X SLD	40.9	0	0	0	1.7E2	1.417	23882	6698	Sisma Y SLD	0	40.9	0	0	1.7E2	1.417
23883	6699	Sisma X SLV	24.7	0	0	0	1.0E2	1.418	23884	6699	Sisma Y SLV	0	24.7	0	0	1.0E2	1.418
23885	6699	Sisma X SLD	24.3	0	0	0	1.0E2	1.418	23886	6699	Sisma Y SLD	0	24.3	0	0	1.0E2	1.418
23887	6700	Sisma X SLV	14.9	0	0	0	61.513	1.418	23888	6700	Sisma Y SLV	0	14.9	0	0	61.513	1.418
23889	6700	Sisma X SLD	14.6	0	0	0	61.513	1.418	23890	6700	Sisma Y SLD	0	14.6	0	0	61.513	1.418
23891	6701	Sisma X SLV	14.9	0	0	0	61.513	1.418	23892	6701	Sisma Y SLV	0	14.9	0	0	61.513	1.418
23893	6701	Sisma X SLD	14.6	0	0	0	61.513	1.418	23894	6701	Sisma Y SLD	0	14.6	0	0	61.513	1.418
23895	6702	Sisma X SLV	46.1	0	0	0	190.29	1.419	23896	6702	Sisma Y SLV	0	46.1	0	0	190.29	1.419
23897	6702	Sisma X SLD	45.3	0	0	0	190.29	1.419	23898	6702	Sisma Y SLD	0	45.3	0	0	190.29	1.419
23899	6703	Sisma X SLV	47	0	0	0	1.9E2	1.419	23900	6703	Sisma Y SLV	0	47	0	0	1.9E2	1.419
23901	6703	Sisma X SLD	46.3	0	0	0	1.9E2	1.419	23902	6703	Sisma Y SLD	0	46.3	0	0	1.9E2	1.419
23903	6704	Sisma X SLV	47.2	0	0	0	2.0E2	1.419	23904	6704	Sisma Y SLV	0	47.2	0	0	2.0E2	1.419
23905	6704	Sisma X SLD	46.5	0	0	0	2.0E2	1.419	23906	6704	Sisma Y SLD	0	46.5	0	0	2.0E2	1.419
23907	6705	Sisma X SLV	30.8	0	0	0	1.3E2	1.419	23908	6705	Sisma Y SLV	0	30.8	0	0	1.3E2	1.419
23909	6705	Sisma X SLD	30.3	0	0	0	1.3E2	1.419	23910	6705	Sisma Y SLD	0	30.3	0	0	1.3E2	1.419
23911	6706	Sisma X SLV	45.5	0	0	0	1.9E2	1.419	23912	6706	Sisma Y SLV	0	45.5	0	0	1.9E2	1.419
23913	6706	Sisma X SLD	44.8	0	0	0	1.9E2	1.419	23914	6706	Sisma Y SLD	0	44.8	0	0	1.9E2	1.419
23915	6707	Sisma X SLV	46.1	0	0	0	1.9E2	1.419	23916	6707	Sisma Y SLV	0	46.1	0	0	1.9E2	1.419
23917	6707	Sisma X SLD	45.4	0	0	0	1.9E2	1.419	23918	6707	Sisma Y SLD	0	45.4	0	0	1.9E2	1.419
23919	6708	Sisma X SLV	46.1	0	0	0	1.9E2	1.419	23920	6708	Sisma Y SLV	0	46.1	0	0	1.9E2	1.419
23921	6708	Sisma X SLD	45.4	0	0	0	1.9E2	1.419	23922	6708	Sisma Y SLD	0	45.4	0	0	1.9E2	1.419
23923	6709	Sisma X SLV	47.3	0	0	0	2.0E2	1.42	23924	6709	Sisma Y SLV	0	47.3	0	0	2.0E2	1.42
23925	6709	Sisma X SLD	46.6	0	0	0	2.0E2	1.42	23926	6709	Sisma Y SLD	0	46.6	0	0	2.0E2	1.42
23927	6710	Sisma X SLV	45.6	0	0	0	1.9E2	1.42	23928	6710	Sisma Y SLV	0	45.6	0	0	1.9E2	1.42
23929	6710	Sisma X SLD	44.9	0	0	0	1.9E2	1.42	23930	6710	Sisma Y SLD	0	44.9	0	0	1.9E2	1.42
23931	6711	Sisma X SLV	29.6	0	0	0	1.2E2	1.42	23932	6711	Sisma Y SLV	0	29.6	0	0	1.2E2	1.42
23933	6711	Sisma X SLD	29.2	0	0	0	1.2E2	1.42	23934	6711	Sisma Y SLD	0	29.2	0	0	1.2E2	1.42
23935	6712	Sisma X SLV	14.6	0	0	0	60.302	1.42	23936	6712	Sisma Y SLV	0	14.6	0	0	60.302	1.42
23937	6712	Sisma X SLD	14.4	0	0	0	60.302	1.42	23938	6712	Sisma Y SLD	0	14.4	0	0	60.302	1.42
23939	6713	Sisma X SLV	28.7	0	0	0	1.2E2	1.421	23940	6713	Sisma Y SLV	0	28.7	0	0	1.2E2	1.421
23941	6713	Sisma X SLD	28.3	0	0	0	1.2E2	1.421	23942	6713	Sisma Y SLD	0	28.3	0	0	1.2E2	1.421
23943	6714	Sisma X SLV	28.7	0	0	0	1.2E2	1.421	23944	6714	Sisma Y SLV	0	28.7	0	0	1.2E2	1.421
23945	6714	Sisma X SLD	28.3	0	0	0	1.2E2	1.421	23946	6714	Sisma Y SLD	0	28.3	0	0	1.2E2	1.421
23947	6715	Sisma X SLV	45.9	0	0	0	1.9E2	1.421	23948	6715	Sisma Y SLV	0	45.9	0	0	1.9E2	1.421
23949	6715	Sisma X SLD	45.1	0	0	0	1.9E2	1.421	23950	6715	Sisma Y SLD	0	45.1	0	0	1.9E2	1.421
23951	6716	Sisma X SLV	43.4	0	0	0	1.8E2	1.421	23952	6716	Sisma Y SLV	0	43.4	0	0	1.8E2	1.421
23953	6716	Sisma X SLD	42.7	0	0	0	1.8E2	1.421	23954	6716	Sisma Y SLD	0	42.7	0	0	1.8E2	1.421
23955	6717	Sisma X SLV	43.4	0	0	0	1.8E2	1.421	23956	6717	Sisma Y SLV	0	43.4	0	0	1.8E2	1.421
23957	6717	Sisma X SLD	42.7	0	0	0	1.8E2	1.421	23958	6717	Sisma Y SLD	0	42.7	0	0	1.8E2	1.421
23959	6718	Sisma X SLV	45.6	0	0	0	1.9E2	1.421	23960	6718	Sisma Y SLV	0	45.6	0	0	1.9E2	1.421
23961	6718	Sisma X SLD	44.9	0	0	0	1.9E2	1.421	23962	6718	Sisma Y SLD	0	44.9	0	0	1.9E2	1.421
23963	6719	Sisma X SLV	16.4	0	0	0	67.581	1.421	23964	6719	Sisma Y SLV	0	16.4	0	0	67.581	1.421
23965	6719	Sisma X SLD	16.1	0	0	0	67.581	1.421	23966	6719	Sisma Y SLD	0	16.1	0	0	67.581	1.421
23967	6720	Sisma X SLV	45.8	0	0	0	1.9E2	1.421	23968	6720	Sisma Y SLV	0	45.8	0	0	1.9E2	1.421
23969	6720	Sisma X SLD	45	0	0	0	1.9E2	1.421	23970	6720	Sisma Y SLD	0	45	0	0	1.9E2	1.421
23971	6721	Sisma X SLV	15.6	0	0	0	64.213	1.422	23972	6721	Sisma Y SLV	0	15.6	0	0	64.213	1.422
23973	6721	Sisma X SLD	15.3	0	0	0	64.213	1.422	23974	6721	Sisma Y SLD	0	15.3	0	0	64.213	1.422
23975	6722	Sisma X SLV	44.3	0	0	0	1.8E2	1.422	23976	6722	Sisma Y SLV	0	44.3	0	0	1.8E2	1.422
23977	6722	Sisma X SLD	43.6	0	0	0	1.8E2	1.422	23978	6722	Sisma Y SLD	0	43.6	0	0	1.8E2	1.422
23979	6723	Sisma X SLV	44.3	0	0	0	1.8E2	1.422	23980	6723	Sisma Y SLV	0	44.3	0	0	1.8E2	1.422
23981	6723	Sisma X SLD	43.6	0	0	0	1.8E2	1.422	23982	6723	Sisma Y SLD	0	43.6	0	0	1.8E2	1.422
23983	6724	Sisma X SLV	29.6	0	0	0	1.2E2	1.422	23984	6724	Sisma Y SLV	0	29.6	0	0	1.2E2	1.422
23985	6724	Sisma X SLD	29.2	0	0	0	1.2E2	1.422	23986	6724	Sisma Y SLD	0	29.2	0	0	1.2E2	1.422
23987	6725	Sisma X SLV	29.3	0	0	0	120.73	1.422	23988	6725	Sisma Y SLV	0	29.3	0	0	120.73	1.422
23989	6725	Sisma X SLD	28.8	0	0	0	120.73	1.422	23990	6725	Sisma Y SLD	0	28.8	0	0	120.73	1.422
23991	6726	Sisma X SLV	24.9	0	0	0	1.0E2	1.423	23992	6726	Sisma Y SLV	0	24.9	0	0	1.0E2	1.423
23993	6726	Sisma X SLD	24.5	0	0	0	1.0E2	1.423	23994	6726	Sisma Y SLD	0	24.5	0	0	1.0E2	1.423
23995	6727	Sisma X SLV	24.9	0	0	0	1.0E2	1.423	23996	6727	Sisma Y SLV	0	24.9	0	0	1.0E2	1.423
23997	6727	Sisma X SLD	24.5	0	0	0	1.0E2	1.423	23998	6727	Sisma Y SLD	0	24.5	0	0	1.0E2	1.423
23999	6728	Sisma X SLV	18.5	0	0	0	75.991	1.425	24000	6728	Sisma Y SLV	0	18.5	0	0	75.991	1.425
24001	6728	Sisma X SLD	18.2	0	0	0	75.991	1.425	24002	6728	Sisma Y SLD	0	18.2	0	0	75.991	1.425
24003	6729	Sisma X SLV	26.5	0	0	0	1.1E2	1.426	24004	6729	Sisma Y SLV	0	26.5	0	0	1.1E2	1.426
24005	6729	Sisma X SLD	26	0	0	0	1.1E2	1.426	24006	6729	Sisma Y SLD	0	26	0	0	1.1E2	1.426
24007	6730	Sisma X SLV	26.5	0	0	0	1.1E2	1.426	24008	6730	Sisma Y SLV	0	26.5	0	0	1.1E2	1.426
24009	6730	Sisma X SLD	26	0	0	0	1.1E2	1.426	24010	6730	Sisma Y SLD	0	26	0	0	1.1E2	1.426
24011	6731	Sisma X SLV	18.7	0	0	0	76.8	1.428	24012	6731	Sisma Y SLV	0	18.7	0	0	76.8	1.428
24013	6731	Sisma X SLD	18.4	0	0	0	76.8	1.428	24014	6731	Sisma Y SLD	0	18.4	0	0	76.8	1.428
24015	6732	Sisma X SLV	18.7	0	0	0	76.8	1.428	24016	6732	Sisma Y SLV	0	18.7	0	0	76.8	1.428
24017	6732	Sisma X SLD	18.4	0	0	0	76.8	1.428	24018	6732	Sisma Y SLD	0	18.4	0	0	76.8	1.428
24019	6733	Sisma X SLV	42.8	0	0	0	1.8E2	1.429	24020	6733	Sisma Y SLV	0	42.8	0	0	1.8E2	1.429
24021	6733	Sisma X SLD	42.1	0	0	0	1.8E2	1.429	24022	6733	Sisma Y SLD	0	42.1	0	0	1.8E2	1.429
24023	6734	Sisma X SLV	18	0	0	0	73.717	1.429	24024	6734	Sisma Y SLV	0	18	0	0	73.717	1.429
24025	6734	Sisma X SLD	17.7	0	0	0	73.717	1.429	24026	6734	Sisma Y SLD	0	17.7	0	0	73.717	1.429
24027	6735	Sisma X SLV	18	0	0	0	73.717	1.429	24028	6735	Sisma Y SLV	0	18	0	0	73.717	1.429
24029	6735	Sisma X SLD	17.7	0	0	0	73.717	1.429	24030	6735	Sisma Y SLD	0	17.7	0	0	73.717	1.429
24031	6736	Sisma X SLV	19.9	0	0	0	81.241	1.435	24032	6736	Sisma Y SLV	0	19.9	0	0	81.241	1.435
24033	6736	Sisma X SLD	19.6	0	0	0	81.241	1.435	24034	6736	Sisma Y SLD	0	19.6	0	0	81.241	1.435
24035	6737	Sisma X SLV	19.9	0	0	0	81.241	1.435	24036	6737	Sisma Y SLV	0	19.9	0	0	81.241	1.435
24037	6737	Sisma X SLD	19.6	0	0	0	81.241	1.435	24038	6737	Sisma Y SLD	0	19.6	0	0	81.241	1.435
24039	6738	Sisma X SLV	18.1	0	0	0	73.798	1.435	24040	6738	Sisma Y SLV	0	18.1	0	0	73.798	1.435
24041	6738	Sisma X SLD	17.8	0	0	0	73.798	1.435	24042	6738	Sisma Y SLD	0	17.8	0	0	73.798	1.435
24043	6739	Sisma X SLV	18.1	0	0	0	73.798	1.435	24044	6739	Sisma Y SLV	0	18.1	0	0	73.798	1.435
24045	6739	Sisma X SLD	17.8	0	0	0	73.798	1.435	24046	6739	Sisma Y SLD	0	17.8	0	0	73.798	1.435
24047	6740	Sisma X SLV	18.4	0	0	0	75.258	1.437	24048	6740	Sisma Y SLV	0	18.4	0	0	75.258	1.437
24049	6740	Sisma X SLD	18.2	0	0	0	75.258	1.437	24050	6740	Sisma Y SLD	0	18.2	0	0	75.258	1.437
24051	6741	Sisma X SLV	18.4	0	0	0	75.258	1.437	24052	6741	Sisma Y SLV	0	18.4	0	0	75.258	1.437
24053	6741	Sisma X SLD	18.2	0	0	0	75.258	1.437	24054	6741	Sisma Y SLD	0	18.2	0	0	75.258	1.437
24055	6742	Sisma X SLV	34.8	0	0	0	1.4E2	1.441	24056	6742	Sisma Y SLV	0	34.8	0	0	1.4E2	1.441
24057	6742	Sisma X SLD	34.3	0	0	0	1.4E2	1.441	24058	6742	Sisma Y SLD	0	34.3	0	0	1.4E2	1.441
24059	6743	Sisma X SLV	46.6	0	0	0	1.9E2	1.444	24060	6743	Sisma Y SLV	0	46.6	0	0	1.9E2	1.444
24061	6743	Sisma X SLD	45.9	0	0	0	1.9E2	1.444	24062	6743	Sisma Y SLD	0	45.9	0	0	1.9E2	1.444
24063	6744	Sisma X SLV	11.1	0	0	0	45.114	1.447	24064	6744	Sisma Y SLV	0	11.1	0	0	45.114	1.447
24065	6744	Sisma X SLD	11	0	0	0	45.114	1.447	24066	6744	Sisma Y SLD	0	11	0	0	45.114	1.447
24067	6745	Sisma X SLV	11.1	0	0	0	45.114	1.447	24068	6745	Sisma Y SLV	0	11.1	0	0	45.114	1.447
24069	6745	Sisma X SLD	11	0	0	0	45.114	1.447	24070	6745	Sisma Y SLD	0	11	0	0	45.114	1.447
24071	6746	Sisma X SLV	21.8	0	0	0	88.378	1.447	24072	6746	Sisma Y SLV	0	21.8	0	0	88.378	1.447
24073	6746	Sisma X SLD	21.5	0	0	0	88.378	1.447	24074	6746	Sisma Y SLD	0	21.5	0	0	88.378	1.447
24075	6747	Sisma X SLV	18.7	0	0	0	75.483	1.448	24076	6747	Sisma Y SLV	0	18.7	0	0	75.483	1.448
24077	6747	Sisma X SLD	18.4	0	0	0	75.483	1.448	24078	6747	Sisma Y SLD	0	18.4	0	0	75.483	1.448
24079	6748	Sisma X SLV	17.3	0	0	0	69.873	1.449	24080	6748	Sisma Y SLV	0	17.3	0	0	69.873	1.449
24081	6748	Sisma X SLD	17	0	0	0	69.873	1.449	24082	6748	Sisma Y SLD	0	17	0	0	69.873	1.449
24083	6749	Sisma X SLV	17.3	0	0	0	69.873	1.449	24084	6749	Sisma Y SLV	0	17.3	0	0	69.873	1.449

Indice	Nodo	Condizione	Fx	Fy	Fz	Mz	Peso	Gamma	Indice	Nodo	Condizione	Fx	Fy	Fz	Mz	Peso	Gamma
24085	6749	Sisma X SLD	17	0	0	0	69.873	1.449	24086	6749	Sisma Y SLD	0	17	0	0	69.873	1.449
24087	6750	Sisma X SLV	46.1	0	0	0	1.9E2	1.45	24088	6750	Sisma Y SLV	0	46.1	0	0	1.9E2	1.45
24089	6750	Sisma X SLD	45.4	0	0	0	1.9E2	1.45	24090	6750	Sisma Y SLD	0	45.4	0	0	1.9E2	1.45
24091	6751	Sisma X SLV	46.1	0	0	0	1.9E2	1.45	24092	6751	Sisma Y SLV	0	46.1	0	0	1.9E2	1.45
24093	6751	Sisma X SLD	45.4	0	0	0	1.9E2	1.45	24094	6751	Sisma Y SLD	0	45.4	0	0	1.9E2	1.45
24095	6752	Sisma X SLV	27.6	0	0	0	1.1E2	1.45	24096	6752	Sisma Y SLV	0	27.6	0	0	1.1E2	1.45
24097	6752	Sisma X SLD	27.2	0	0	0	1.1E2	1.45	24098	6752	Sisma Y SLD	0	27.2	0	0	1.1E2	1.45
24099	6753	Sisma X SLV	46	0	0	0	1.9E2	1.45	24100	6753	Sisma Y SLV	0	46	0	0	1.9E2	1.45
24101	6753	Sisma X SLD	45.3	0	0	0	1.9E2	1.45	24102	6753	Sisma Y SLD	0	45.3	0	0	1.9E2	1.45
24103	6754	Sisma X SLV	46	0	0	0	1.9E2	1.45	24104	6754	Sisma Y SLV	0	46	0	0	1.9E2	1.45
24105	6754	Sisma X SLD	45.3	0	0	0	1.9E2	1.45	24106	6754	Sisma Y SLD	0	45.3	0	0	1.9E2	1.45
24107	6755	Sisma X SLV	20.6	0	0	0	83.42	1.45	24108	6755	Sisma Y SLV	0	20.6	0	0	83.42	1.45
24109	6755	Sisma X SLD	20.3	0	0	0	83.42	1.45	24110	6755	Sisma Y SLD	0	20.3	0	0	83.42	1.45
24111	6756	Sisma X SLV	27.2	0	0	0	1.1E2	1.451	24112	6756	Sisma Y SLV	0	27.2	0	0	1.1E2	1.451
24113	6756	Sisma X SLD	26.8	0	0	0	1.1E2	1.451	24114	6756	Sisma Y SLD	0	26.8	0	0	1.1E2	1.451
24115	6757	Sisma X SLV	41.2	0	0	0	1.7E2	1.451	24116	6757	Sisma Y SLV	0	41.2	0	0	1.7E2	1.451
24117	6757	Sisma X SLD	40.6	0	0	0	1.7E2	1.451	24118	6757	Sisma Y SLD	0	40.6	0	0	1.7E2	1.451
24119	6758	Sisma X SLV	41.2	0	0	0	1.7E2	1.451	24120	6758	Sisma Y SLV	0	41.2	0	0	1.7E2	1.451
24121	6758	Sisma X SLD	40.6	0	0	0	1.7E2	1.451	24122	6758	Sisma Y SLD	0	40.6	0	0	1.7E2	1.451
24123	6759	Sisma X SLV	22.2	0	0	0	89.772	1.451	24124	6759	Sisma Y SLV	0	22.2	0	0	89.772	1.451
24125	6759	Sisma X SLD	21.9	0	0	0	89.772	1.451	24126	6759	Sisma Y SLD	0	21.9	0	0	89.772	1.451
24127	6760	Sisma X SLV	24.6	0	0	0	99.406	1.451	24128	6760	Sisma Y SLV	0	24.6	0	0	99.406	1.451
24129	6760	Sisma X SLD	24.2	0	0	0	99.406	1.451	24130	6760	Sisma Y SLD	0	24.2	0	0	99.406	1.451
24131	6761	Sisma X SLV	26.9	0	0	0	1.1E2	1.452	24132	6761	Sisma Y SLV	0	26.9	0	0	1.1E2	1.452
24133	6761	Sisma X SLD	26.4	0	0	0	1.1E2	1.452	24134	6761	Sisma Y SLD	0	26.4	0	0	1.1E2	1.452
24135	6762	Sisma X SLV	39.3	0	0	0	1.6E2	1.452	24136	6762	Sisma Y SLV	0	39.3	0	0	1.6E2	1.452
24137	6762	Sisma X SLD	38.7	0	0	0	1.6E2	1.452	24138	6762	Sisma Y SLD	0	38.7	0	0	1.6E2	1.452
24139	6763	Sisma X SLV	39.3	0	0	0	1.6E2	1.452	24140	6763	Sisma Y SLV	0	39.3	0	0	1.6E2	1.452
24141	6763	Sisma X SLD	38.7	0	0	0	1.6E2	1.452	24142	6763	Sisma Y SLD	0	38.7	0	0	1.6E2	1.452
24143	6764	Sisma X SLV	19.4	0	0	0	78.173	1.452	24144	6764	Sisma Y SLV	0	19.4	0	0	78.173	1.452
24145	6764	Sisma X SLD	19.1	0	0	0	78.173	1.452	24146	6764	Sisma Y SLD	0	19.1	0	0	78.173	1.452
24147	6765	Sisma X SLV	16.4	0	0	0	66.036	1.453	24148	6765	Sisma Y SLV	0	16.4	0	0	66.036	1.453
24149	6765	Sisma X SLD	16.1	0	0	0	66.036	1.453	24150	6765	Sisma Y SLD	0	16.1	0	0	66.036	1.453
24151	6766	Sisma X SLV	37.6	0	0	0	1.5E2	1.453	24152	6766	Sisma Y SLV	0	37.6	0	0	1.5E2	1.453
24153	6766	Sisma X SLD	37	0	0	0	1.5E2	1.453	24154	6766	Sisma Y SLD	0	37	0	0	1.5E2	1.453
24155	6767	Sisma X SLV	37.6	0	0	0	1.5E2	1.453	24156	6767	Sisma Y SLV	0	37.6	0	0	1.5E2	1.453
24157	6767	Sisma X SLD	37	0	0	0	1.5E2	1.453	24158	6767	Sisma Y SLD	0	37	0	0	1.5E2	1.453
24159	6768	Sisma X SLV	54.4	0	0	0	2.2E2	1.455	24160	6768	Sisma Y SLV	0	54.4	0	0	2.2E2	1.455
24161	6768	Sisma X SLD	53.5	0	0	0	2.2E2	1.455	24162	6768	Sisma Y SLD	0	53.5	0	0	2.2E2	1.455
24163	6769	Sisma X SLV	85	0	0	0	3.4E2	1.455	24164	6769	Sisma Y SLV	0	85	0	0	3.4E2	1.455
24165	6769	Sisma X SLD	83.7	0	0	0	3.4E2	1.455	24166	6769	Sisma Y SLD	0	83.7	0	0	3.4E2	1.455
24167	6770	Sisma X SLV	83.6	0	0	0	3.4E2	1.455	24168	6770	Sisma Y SLV	0	83.6	0	0	3.4E2	1.455
24169	6770	Sisma X SLD	82.3	0	0	0	3.4E2	1.455	24170	6770	Sisma Y SLD	0	82.3	0	0	3.4E2	1.455
24171	6771	Sisma X SLV	56.3	0	0	0	2.3E2	1.455	24172	6771	Sisma Y SLV	0	56.3	0	0	2.3E2	1.455
24173	6771	Sisma X SLD	55.4	0	0	0	2.3E2	1.455	24174	6771	Sisma Y SLD	0	55.4	0	0	2.3E2	1.455
24175	6772	Sisma X SLV	56.3	0	0	0	2.3E2	1.455	24176	6772	Sisma Y SLV	0	56.3	0	0	2.3E2	1.455
24177	6772	Sisma X SLD	55.4	0	0	0	2.3E2	1.455	24178	6772	Sisma Y SLD	0	55.4	0	0	2.3E2	1.455
24179	6773	Sisma X SLV	57.2	0	0	0	230.62	1.455	24180	6773	Sisma Y SLV	0	57.2	0	0	230.62	1.455
24181	6773	Sisma X SLD	56.3	0	0	0	230.62	1.455	24182	6773	Sisma Y SLD	0	56.3	0	0	230.62	1.455
24183	6774	Sisma X SLV	84.6	0	0	0	3.4E2	1.455	24184	6774	Sisma Y SLV	0	84.6	0	0	3.4E2	1.455
24185	6774	Sisma X SLD	83.3	0	0	0	3.4E2	1.455	24186	6774	Sisma Y SLD	0	83.3	0	0	3.4E2	1.455
24187	6775	Sisma X SLV	84.3	0	0	0	3.4E2	1.455	24188	6775	Sisma Y SLV	0	84.3	0	0	3.4E2	1.455
24189	6775	Sisma X SLD	82.9	0	0	0	3.4E2	1.455	24190	6775	Sisma Y SLD	0	82.9	0	0	3.4E2	1.455
24191	6776	Sisma X SLV	36.2	0	0	0	1.5E2	1.455	24192	6776	Sisma Y SLV	0	36.2	0	0	1.5E2	1.455
24193	6776	Sisma X SLD	35.6	0	0	0	1.5E2	1.455	24194	6776	Sisma Y SLD	0	35.6	0	0	1.5E2	1.455
24195	6777	Sisma X SLV	36.2	0	0	0	1.5E2	1.455	24196	6777	Sisma Y SLV	0	36.2	0	0	1.5E2	1.455
24197	6777	Sisma X SLD	35.6	0	0	0	1.5E2	1.455	24198	6777	Sisma Y SLD	0	35.6	0	0	1.5E2	1.455
24199	6778	Sisma X SLV	36.2	0	0	0	1.5E2	1.455	24200	6778	Sisma Y SLV	0	36.2	0	0	1.5E2	1.455
24201	6778	Sisma X SLD	35.6	0	0	0	1.5E2	1.455	24202	6778	Sisma Y SLD	0	35.6	0	0	1.5E2	1.455
24203	6779	Sisma X SLV	36.2	0	0	0	1.5E2	1.455	24204	6779	Sisma Y SLV	0	36.2	0	0	1.5E2	1.455
24205	6779	Sisma X SLD	35.6	0	0	0	1.5E2	1.455	24206	6779	Sisma Y SLD	0	35.6	0	0	1.5E2	1.455
24207	6780	Sisma X SLV	36.2	0	0	0	1.5E2	1.455	24208	6780	Sisma Y SLV	0	36.2	0	0	1.5E2	1.455
24209	6780	Sisma X SLD	35.6	0	0	0	1.5E2	1.455	24210	6780	Sisma Y SLD	0	35.6	0	0	1.5E2	1.455
24211	6781	Sisma X SLV	36.2	0	0	0	1.5E2	1.455	24212	6781	Sisma Y SLV	0	36.2	0	0	1.5E2	1.455
24213	6781	Sisma X SLD	35.6	0	0	0	1.5E2	1.455	24214	6781	Sisma Y SLD	0	35.6	0	0	1.5E2	1.455
24215	6782	Sisma X SLV	36.2	0	0	0	1.5E2	1.455	24216	6782	Sisma Y SLV	0	36.2	0	0	1.5E2	1.455
24217	6782	Sisma X SLD	35.6	0	0	0	1.5E2	1.455	24218	6782	Sisma Y SLD	0	35.6	0	0	1.5E2	1.455
24219	6783	Sisma X SLV	36.2	0	0	0	1.5E2	1.455	24220	6783	Sisma Y SLV	0	36.2	0	0	1.5E2	1.455
24221	6783	Sisma X SLD	35.6	0	0	0	1.5E2	1.455	24222	6783	Sisma Y SLD	0	35.6	0	0	1.5E2	1.455
24223	6784	Sisma X SLV	36.2	0	0	0	1.5E2	1.455	24224	6784	Sisma Y SLV	0	36.2	0	0	1.5E2	1.455
24225	6784	Sisma X SLD	35.7	0	0	0	1.5E2	1.455	24226	6784	Sisma Y SLD	0	35.7	0	0	1.5E2	1.455
24227	6785	Sisma X SLV	36.3	0	0	0	1.5E2	1.455	24228	6785	Sisma Y SLV	0	36.3	0	0	1.5E2	1.455
24229	6785	Sisma X SLD	35.7	0	0	0	1.5E2	1.455	24230	6785	Sisma Y SLD	0	35.7	0	0	1.5E2	1.455
24231	6786	Sisma X SLV	36.5	0	0	0	1.5E2	1.455	24232	6786	Sisma Y SLV	0	36.5	0	0	1.5E2	1.455
24233	6786	Sisma X SLD	35.9	0	0	0	1.5E2	1.455	24234	6786	Sisma Y SLD	0	35.9	0	0	1.5E2	1.455
24235	6787	Sisma X SLV	36.8	0	0	0	1.5E2	1.455	24236	6787	Sisma Y SLV	0	36.8	0	0	1.5E2	1.455
24237	6787	Sisma X SLD	36.2	0	0	0	1.5E2	1.455	24238	6787	Sisma Y SLD	0	36.2	0	0	1.5E2	1.455
24239	6788	Sisma X SLV	37	0	0	0	1.5E2	1.455	24240	6788	Sisma Y SLV	0	37	0	0	1.5E2	1.455
24241	6788	Sisma X SLD	36.4	0	0	0	1.5E2	1.455	24242	6788	Sisma Y SLD	0	36.4	0	0	1.5E2	1.455
24243	6789	Sisma X SLV	75.7	0	0	0	3.0E2	1.455	24244	6789	Sisma Y SLV	0	75.7	0	0	3.0E2	1.455
24245	6789	Sisma X SLD	74.5	0	0	0	3.0E2	1.455	24246	6789	Sisma Y SLD	0	74.5	0	0	3.0E2	1.455
24247	6790	Sisma X SLV	55.2	0	0	0	222.25	1.455	24248	6790	Sisma Y SLV	0	55.2	0	0	222.25	1.455
24249	6790	Sisma X SLD	54.3	0	0	0	222.25	1.455	24250	6790	Sisma Y SLD	0	54.3	0	0	222.25	1.455
24251	6791	Sisma X SLV	74.6	0	0	0	3.0E2	1.455	24252	6791	Sisma Y SLV	0	74.6	0	0	3.0E2	1.455
24253	6791	Sisma X SLD	73.4	0	0	0	3.0E2	1.455	24254	6791	Sisma Y SLD	0	73.4	0	0	3.0E2	1.455
24255	6792	Sisma X SLV	56.3	0	0	0	2.3E2	1.455	24256	6792	Sisma Y SLV	0	56.3	0	0	2.3E2	1.455
24257	6792	Sisma X SLD	55.4	0	0	0	2.3E2	1.455	24258	6792	Sisma Y SLD	0	55.4	0	0	2.3E2	1.455
24259	6793	Sisma X SLV	56.3	0	0	0	226.87	1.455	24260	6793	Sisma Y SLV	0	56.3	0	0	226.87	1.455
24261	6793	Sisma X SLD	55.4	0	0	0	226.87	1.455	24262	6793	Sisma Y SLD	0	55.4	0	0	226.87	1.455
24263	6794	Sisma X SLV	58.9	0	0	0	2.4E2	1.455	24264	6794	Sisma Y SLV	0	58.9	0	0	2.4E2	1.455
24265	6794	Sisma X SLD	57.9	0	0	0	2.4E2	1.455	24266	6794	Sisma Y SLD	0	57.9	0	0	2.4E2	1.455
24267	6795	Sisma X SLV	55.3	0	0	0	2.2E2	1.455	24268	6795	Sisma Y SLV	0	55.3	0	0	2.2E2	1.455
24269	6795	Sisma X SLD	54.4	0	0	0	2.2E2	1.455	24270	6795	Sisma Y SLD	0	54.4	0	0	2.2E2	1.455
24271	6796	Sisma X SLV	56.3	0	0	0	2.3E2	1.455	24272	6796	Sisma Y SLV	0	56.3	0	0	2.3E2	1.455
24273	6796	Sisma X SLD	55.4	0	0	0	2.3E2	1.455	24274	6796	Sisma Y SLD	0	55.4	0	0	2.3E2	1.455
24275	6797	Sisma X SLV	56.3	0	0	0	2.3E2	1.455	24276	6797	Sisma Y SLV	0	56.3	0	0	2.3E2	1.455
24277	6797	Sisma X SLD	55.4	0	0	0	2.3E2	1.455	24278	6797	Sisma Y SLD	0	55.4	0	0	2.3E2	1.455
24279	6798	Sisma X SLV	55.4	0	0	0	2.2E2	1.455	24280	6798	Sisma Y SLV	0	55.4	0	0	2.2E2	1.455
24281	6798	Sisma X SLD	54.5	0	0	0	2.2E2	1.455	24282	6798	Sisma Y SLD	0	54.5	0	0	2.2E2	1.455
24283	6799	Sisma X SLV	56.3	0	0	0	2.3E2	1.455	24284	6799	Sisma Y SLV	0	56.3	0	0	2.3E2	1.455
24285	6799	Sisma X SLD	55.4	0	0	0	2.3E2	1.455	24286	6799	Sisma Y SLD	0	55.4	0	0	2.3E2	1.455

Indice	Nodo	Condizione	Fx	Fy	Fz	Mz	Peso	Gamma	Indice	Nodo	Condizione	Fx	Fy	Fz	Mz	Peso	Gamma
24287	6800	Sisma X SLV	56.3	0	0	0	2.3E2	1.455	24288	6800	Sisma Y SLV	0	56.3	0	0	2.3E2	1.455
24289	6800	Sisma X SLD	55.4	0	0	0	2.3E2	1.455	24290	6800	Sisma Y SLD	0	55.4	0	0	2.3E2	1.455
24291	6801	Sisma X SLV	56.2	0	0	0	2.3E2	1.455	24292	6801	Sisma Y SLV	0	56.2	0	0	2.3E2	1.455
24293	6801	Sisma X SLD	55.3	0	0	0	2.3E2	1.455	24294	6801	Sisma Y SLD	0	55.3	0	0	2.3E2	1.455
24295	6802	Sisma X SLV	55.6	0	0	0	2.2E2	1.455	24296	6802	Sisma Y SLV	0	55.6	0	0	2.2E2	1.455
24297	6802	Sisma X SLD	54.7	0	0	0	2.2E2	1.455	24298	6802	Sisma Y SLD	0	54.7	0	0	2.2E2	1.455
24299	6803	Sisma X SLV	56.2	0	0	0	2.3E2	1.455	24300	6803	Sisma Y SLV	0	56.2	0	0	2.3E2	1.455
24301	6803	Sisma X SLD	55.3	0	0	0	2.3E2	1.455	24302	6803	Sisma Y SLD	0	55.3	0	0	2.3E2	1.455
24303	6804	Sisma X SLV	56.4	0	0	0	2.3E2	1.455	24304	6804	Sisma Y SLV	0	56.4	0	0	2.3E2	1.455
24305	6804	Sisma X SLD	55.5	0	0	0	2.3E2	1.455	24306	6804	Sisma Y SLD	0	55.5	0	0	2.3E2	1.455
24307	6805	Sisma X SLV	56.1	0	0	0	2.3E2	1.455	24308	6805	Sisma Y SLV	0	56.1	0	0	2.3E2	1.455
24309	6805	Sisma X SLD	55.2	0	0	0	2.3E2	1.455	24310	6805	Sisma Y SLD	0	55.2	0	0	2.3E2	1.455
24311	6806	Sisma X SLV	56.1	0	0	0	2.3E2	1.455	24312	6806	Sisma Y SLV	0	56.1	0	0	2.3E2	1.455
24313	6806	Sisma X SLD	55.2	0	0	0	2.3E2	1.455	24314	6806	Sisma Y SLD	0	55.2	0	0	2.3E2	1.455
24315	6807	Sisma X SLV	56.1	0	0	0	2.3E2	1.455	24316	6807	Sisma Y SLV	0	56.1	0	0	2.3E2	1.455
24317	6807	Sisma X SLD	55.2	0	0	0	2.3E2	1.455	24318	6807	Sisma Y SLD	0	55.2	0	0	2.3E2	1.455
24319	6808	Sisma X SLV	56.8	0	0	0	2.3E2	1.455	24320	6808	Sisma Y SLV	0	56.8	0	0	2.3E2	1.455
24321	6808	Sisma X SLD	55.9	0	0	0	2.3E2	1.455	24322	6808	Sisma Y SLD	0	55.9	0	0	2.3E2	1.455
24323	6809	Sisma X SLV	55.7	0	0	0	2.2E2	1.455	24324	6809	Sisma Y SLV	0	55.7	0	0	2.2E2	1.455
24325	6809	Sisma X SLD	54.8	0	0	0	2.2E2	1.455	24326	6809	Sisma Y SLD	0	54.8	0	0	2.2E2	1.455
24327	6810	Sisma X SLV	35.5	0	0	0	1.4E2	1.455	24328	6810	Sisma Y SLV	0	35.5	0	0	1.4E2	1.455
24329	6810	Sisma X SLD	35	0	0	0	1.4E2	1.455	24330	6810	Sisma Y SLD	0	35	0	0	1.4E2	1.455
24331	6811	Sisma X SLV	57.1	0	0	0	2.3E2	1.455	24332	6811	Sisma Y SLV	0	57.1	0	0	2.3E2	1.455
24333	6811	Sisma X SLD	56.2	0	0	0	2.3E2	1.455	24334	6811	Sisma Y SLD	0	56.2	0	0	2.3E2	1.455
24335	6812	Sisma X SLV	54.9	0	0	0	2.2E2	1.455	24336	6812	Sisma Y SLV	0	54.9	0	0	2.2E2	1.455
24337	6812	Sisma X SLD	54	0	0	0	2.2E2	1.455	24338	6812	Sisma Y SLD	0	54	0	0	2.2E2	1.455
24339	6813	Sisma X SLV	55.7	0	0	0	2.2E2	1.455	24340	6813	Sisma Y SLV	0	55.7	0	0	2.2E2	1.455
24341	6813	Sisma X SLD	54.8	0	0	0	2.2E2	1.455	24342	6813	Sisma Y SLD	0	54.8	0	0	2.2E2	1.455
24343	6814	Sisma X SLV	55.1	0	0	0	2.2E2	1.455	24344	6814	Sisma Y SLV	0	55.1	0	0	2.2E2	1.455
24345	6814	Sisma X SLD	54.2	0	0	0	2.2E2	1.455	24346	6814	Sisma Y SLD	0	54.2	0	0	2.2E2	1.455
24347	6815	Sisma X SLV	56.9	0	0	0	2.3E2	1.455	24348	6815	Sisma Y SLV	0	56.9	0	0	2.3E2	1.455
24349	6815	Sisma X SLD	56	0	0	0	2.3E2	1.455	24350	6815	Sisma Y SLD	0	56	0	0	2.3E2	1.455
24351	6816	Sisma X SLV	55.8	0	0	0	2.2E2	1.455	24352	6816	Sisma Y SLV	0	55.8	0	0	2.2E2	1.455
24353	6816	Sisma X SLD	55	0	0	0	2.2E2	1.455	24354	6816	Sisma Y SLD	0	55	0	0	2.2E2	1.455
24355	6817	Sisma X SLV	57.4	0	0	0	2.3E2	1.455	24356	6817	Sisma Y SLV	0	57.4	0	0	2.3E2	1.455
24357	6817	Sisma X SLD	56.4	0	0	0	2.3E2	1.455	24358	6817	Sisma Y SLD	0	56.4	0	0	2.3E2	1.455
24359	6818	Sisma X SLV	57.8	0	0	0	232.97	1.455	24360	6818	Sisma Y SLV	0	57.8	0	0	232.97	1.455
24361	6818	Sisma X SLD	56.9	0	0	0	232.97	1.455	24362	6818	Sisma Y SLD	0	56.9	0	0	232.97	1.455
24363	6819	Sisma X SLV	35.5	0	0	0	1.4E2	1.455	24364	6819	Sisma Y SLV	0	35.5	0	0	1.4E2	1.455
24365	6819	Sisma X SLD	35	0	0	0	1.4E2	1.455	24366	6819	Sisma Y SLD	0	35	0	0	1.4E2	1.455
24367	6820	Sisma X SLV	58	0	0	0	2.3E2	1.455	24368	6820	Sisma Y SLV	0	58	0	0	2.3E2	1.455
24369	6820	Sisma X SLD	57.1	0	0	0	2.3E2	1.455	24370	6820	Sisma Y SLD	0	57.1	0	0	2.3E2	1.455
24371	6821	Sisma X SLV	56.8	0	0	0	2.3E2	1.455	24372	6821	Sisma Y SLV	0	56.8	0	0	2.3E2	1.455
24373	6821	Sisma X SLD	55.9	0	0	0	2.3E2	1.455	24374	6821	Sisma Y SLD	0	55.9	0	0	2.3E2	1.455
24375	6822	Sisma X SLV	55	0	0	0	2.2E2	1.455	24376	6822	Sisma Y SLV	0	55	0	0	2.2E2	1.455
24377	6822	Sisma X SLD	54.1	0	0	0	2.2E2	1.455	24378	6822	Sisma Y SLD	0	54.1	0	0	2.2E2	1.455
24379	6823	Sisma X SLV	54.8	0	0	0	2.2E2	1.455	24380	6823	Sisma Y SLV	0	54.8	0	0	2.2E2	1.455
24381	6823	Sisma X SLD	53.9	0	0	0	2.2E2	1.455	24382	6823	Sisma Y SLD	0	53.9	0	0	2.2E2	1.455
24383	6824	Sisma X SLV	53.9	0	0	0	2.2E2	1.455	24384	6824	Sisma Y SLV	0	53.9	0	0	2.2E2	1.455
24385	6824	Sisma X SLD	53.1	0	0	0	2.2E2	1.455	24386	6824	Sisma Y SLD	0	53.1	0	0	2.2E2	1.455
24387	6825	Sisma X SLV	55.6	0	0	0	2.2E2	1.455	24388	6825	Sisma Y SLV	0	55.6	0	0	2.2E2	1.455
24389	6825	Sisma X SLD	54.7	0	0	0	2.2E2	1.455	24390	6825	Sisma Y SLD	0	54.7	0	0	2.2E2	1.455
24391	6826	Sisma X SLV	57.8	0	0	0	232.9	1.455	24392	6826	Sisma Y SLV	0	57.8	0	0	232.9	1.455
24393	6826	Sisma X SLD	56.9	0	0	0	232.9	1.455	24394	6826	Sisma Y SLD	0	56.9	0	0	232.9	1.455
24395	6827	Sisma X SLV	57.5	0	0	0	2.3E2	1.455	24396	6827	Sisma Y SLV	0	57.5	0	0	2.3E2	1.455
24397	6827	Sisma X SLD	56.6	0	0	0	2.3E2	1.455	24398	6827	Sisma Y SLD	0	56.6	0	0	2.3E2	1.455
24399	6828	Sisma X SLV	57.4	0	0	0	2.3E2	1.455	24400	6828	Sisma Y SLV	0	57.4	0	0	2.3E2	1.455
24401	6828	Sisma X SLD	56.5	0	0	0	2.3E2	1.455	24402	6828	Sisma Y SLD	0	56.5	0	0	2.3E2	1.455
24403	6829	Sisma X SLV	35.5	0	0	0	1.4E2	1.455	24404	6829	Sisma Y SLV	0	35.5	0	0	1.4E2	1.455
24405	6829	Sisma X SLD	35	0	0	0	1.4E2	1.455	24406	6829	Sisma Y SLD	0	35	0	0	1.4E2	1.455
24407	6830	Sisma X SLV	60.2	0	0	0	2.4E2	1.455	24408	6830	Sisma Y SLV	0	60.2	0	0	2.4E2	1.455
24409	6830	Sisma X SLD	59.2	0	0	0	2.4E2	1.455	24410	6830	Sisma Y SLD	0	59.2	0	0	2.4E2	1.455
24411	6831	Sisma X SLV	60.1	0	0	0	242.17	1.455	24412	6831	Sisma Y SLV	0	60.1	0	0	242.17	1.455
24413	6831	Sisma X SLD	59.2	0	0	0	242.17	1.455	24414	6831	Sisma Y SLD	0	59.2	0	0	242.17	1.455
24415	6832	Sisma X SLV	50	0	0	0	2.0E2	1.455	24416	6832	Sisma Y SLV	0	50	0	0	2.0E2	1.455
24417	6832	Sisma X SLD	49.2	0	0	0	2.0E2	1.455	24418	6832	Sisma Y SLD	0	49.2	0	0	2.0E2	1.455
24419	6833	Sisma X SLV	53.4	0	0	0	2.1E2	1.455	24420	6833	Sisma Y SLV	0	53.4	0	0	2.1E2	1.455
24421	6833	Sisma X SLD	52.5	0	0	0	2.1E2	1.455	24422	6833	Sisma Y SLD	0	52.5	0	0	2.1E2	1.455
24423	6834	Sisma X SLV	35.5	0	0	0	1.4E2	1.455	24424	6834	Sisma Y SLV	0	35.5	0	0	1.4E2	1.455
24425	6834	Sisma X SLD	35	0	0	0	1.4E2	1.455	24426	6834	Sisma Y SLD	0	35	0	0	1.4E2	1.455
24427	6835	Sisma X SLV	57.5	0	0	0	2.3E2	1.455	24428	6835	Sisma Y SLV	0	57.5	0	0	2.3E2	1.455
24429	6835	Sisma X SLD	56.6	0	0	0	2.3E2	1.455	24430	6835	Sisma Y SLD	0	56.6	0	0	2.3E2	1.455
24431	6836	Sisma X SLV	57.2	0	0	0	2.3E2	1.455	24432	6836	Sisma Y SLV	0	57.2	0	0	2.3E2	1.455
24433	6836	Sisma X SLD	56.3	0	0	0	2.3E2	1.455	24434	6836	Sisma Y SLD	0	56.3	0	0	2.3E2	1.455
24435	6837	Sisma X SLV	56.7	0	0	0	2.3E2	1.455	24436	6837	Sisma Y SLV	0	56.7	0	0	2.3E2	1.455
24437	6837	Sisma X SLD	55.8	0	0	0	2.3E2	1.455	24438	6837	Sisma Y SLD	0	55.8	0	0	2.3E2	1.455
24439	6838	Sisma X SLV	54.8	0	0	0	2.2E2	1.455	24440	6838	Sisma Y SLV	0	54.8	0	0	2.2E2	1.455
24441	6838	Sisma X SLD	53.9	0	0	0	2.2E2	1.455	24442	6838	Sisma Y SLD	0	53.9	0	0	2.2E2	1.455
24443	6839	Sisma X SLV	56.8	0	0	0	2.3E2	1.455	24444	6839	Sisma Y SLV	0	56.8	0	0	2.3E2	1.455
24445	6839	Sisma X SLD	55.9	0	0	0	2.3E2	1.455	24446	6839	Sisma Y SLD	0	55.9	0	0	2.3E2	1.455
24447	6840	Sisma X SLV	55.6	0	0	0	2.2E2	1.455	24448	6840	Sisma Y SLV	0	55.6	0	0	2.2E2	1.455
24449	6840	Sisma X SLD	54.8	0	0	0	2.2E2	1.455	24450	6840	Sisma Y SLD	0	54.8	0	0	2.2E2	1.455
24451	6841	Sisma X SLV	57.3	0	0	0	2.3E2	1.455	24452	6841	Sisma Y SLV	0	57.3	0	0	2.3E2	1.455
24453	6841	Sisma X SLD	56.4	0	0	0	2.3E2	1.455	24454	6841	Sisma Y SLD	0	56.4	0	0	2.3E2	1.455
24455	6842	Sisma X SLV	53.6	0	0	0	2.2E2	1.455	24456	6842	Sisma Y SLV	0	53.6	0	0	2.2E2	1.455
24457	6842	Sisma X SLD	52.8	0	0	0	2.2E2	1.455	24458	6842	Sisma Y SLD	0	52.8	0	0	2.2E2	1.455
24459	6843	Sisma X SLV	56.6	0	0	0	2.3E2	1.455	24460	6843	Sisma Y SLV	0	56.6	0	0	2.3E2	1.455
24461	6843	Sisma X SLD	55.7	0	0	0	2.3E2	1.455	24462	6843	Sisma Y SLD	0	55.7	0	0	2.3E2	1.455
24463	6844	Sisma X SLV	58.2	0	0	0	2.3E2	1.455	24464	6844	Sisma Y SLV	0	58.2	0	0	2.3E2	1.455
24465	6844	Sisma X SLD	57.3	0	0	0	2.3E2	1.455	24466	6844	Sisma Y SLD	0	57.3	0	0	2.3E2	1.455
24467	6845	Sisma X SLV	35.5	0	0	0	1.4E2	1.455	24468	6845	Sisma Y SLV	0	35.5	0	0	1.4E2	1.455
24469	6845	Sisma X SLD	35	0	0	0	1.4E2	1.455	24470	6845	Sisma Y SLD	0	35	0	0	1.4E2	1.455
24471	6846	Sisma X SLV	57.7	0	0	0	232.21	1.455	24472	6846	Sisma Y SLV	0	57.7	0	0	232.21	1.455
24473	6846	Sisma X SLD	56.7	0	0	0	232.21	1.455	24474	6846	Sisma Y SLD	0	56.7	0	0	232.21	1.455
24475	6847	Sisma X SLV	56.5	0	0	0	2.3E2	1.455	24476	6847	Sisma Y SLV	0	56.5	0	0	2.3E2	1.455
24477	6847	Sisma X SLD	55.6	0	0	0	2.3E2	1.455	24478	6847	Sisma Y SLD	0	55.6	0	0	2.3E2	1.455
24479	6848	Sisma X SLV	56.1	0	0	0	2.3E2	1.455	24480	6848	Sisma Y SLV	0	56.1	0	0	2.3E2	1.455
24481	6848	Sisma X SLD	55.2	0	0	0	2.3E2	1.455	24482	6848	Sisma Y SLD	0	55.2	0	0	2.3E2	1.455
24483	6849	Sisma X SLV	55.7	0	0	0	2.2E2	1.455	24484	6849	Sisma Y SLV	0	55.7	0	0	2.2E2	1.455
24485	6849	Sisma X SLD	54.8	0	0	0	2.2E2	1.455	24486	6849	Sisma Y SLD	0	54.8	0	0	2.2E2	1.455
24487	6850	Sisma X SLV	56.4	0	0	0	2.3E2	1.455	24488	6850	Sisma Y SLV	0	56.4	0	0	2.3E2	1.455
24489	6850	Sisma X SLD	55.5	0	0	0	2.3E2	1.455	24490	6850	Sisma Y SLD	0	55.5	0	0	2.3E2	1.455
24491	6851	Sisma X SLV	54.1	0	0	0	2.2E2	1.455	24492	6851	Sisma Y SLV	0	54.1	0	0	2.2E2	1.455
24493	6851	Sisma X SLD	53.2	0	0	0	2.2E2	1.455	24494	6851	Sisma Y SLD	0	53.2	0	0	2.2E2	1.455

Indice	Nodo	Condizione	Fx	Fy	Fz	Mz	Peso	Gamma	Indice	Nodo	Condizione	Fx	Fy	Fz	Mz	Peso	Gamma
24495	6852	Sisma X SLV	55.2	0	0	0	2.2E2	1.455	24496	6852	Sisma Y SLV	0	55.2	0	0	2.2E2	1.455
24497	6852	Sisma X SLD	54.3	0	0	0	2.2E2	1.455	24498	6852	Sisma Y SLD	0	54.3	0	0	2.2E2	1.455
24499	6853	Sisma X SLV	54.5	0	0	0	219.46	1.455	24500	6853	Sisma Y SLV	0	54.5	0	0	219.46	1.455
24501	6853	Sisma X SLD	53.6	0	0	0	219.46	1.455	24502	6853	Sisma Y SLD	0	53.6	0	0	219.46	1.455
24503	6854	Sisma X SLV	35.5	0	0	0	1.4E2	1.455	24504	6854	Sisma Y SLV	0	35.5	0	0	1.4E2	1.455
24505	6854	Sisma X SLD	34.9	0	0	0	1.4E2	1.455	24506	6854	Sisma Y SLD	0	34.9	0	0	1.4E2	1.455
24507	6855	Sisma X SLV	59.5	0	0	0	2.4E2	1.455	24508	6855	Sisma Y SLV	0	59.5	0	0	2.4E2	1.455
24509	6855	Sisma X SLD	58.5	0	0	0	2.4E2	1.455	24510	6855	Sisma Y SLD	0	58.5	0	0	2.4E2	1.455
24511	6856	Sisma X SLV	59.4	0	0	0	2.4E2	1.455	24512	6856	Sisma Y SLV	0	59.4	0	0	2.4E2	1.455
24513	6856	Sisma X SLD	58.4	0	0	0	2.4E2	1.455	24514	6856	Sisma Y SLD	0	58.4	0	0	2.4E2	1.455
24515	6857	Sisma X SLV	56.2	0	0	0	2.3E2	1.455	24516	6857	Sisma Y SLV	0	56.2	0	0	2.3E2	1.455
24517	6857	Sisma X SLD	55.3	0	0	0	2.3E2	1.455	24518	6857	Sisma Y SLD	0	55.3	0	0	2.3E2	1.455
24519	6858	Sisma X SLV	51	0	0	0	2.1E2	1.455	24520	6858	Sisma Y SLV	0	51	0	0	2.1E2	1.455
24521	6858	Sisma X SLD	50.2	0	0	0	2.1E2	1.455	24522	6858	Sisma Y SLD	0	50.2	0	0	2.1E2	1.455
24523	6859	Sisma X SLV	53.4	0	0	0	2.2E2	1.455	24524	6859	Sisma Y SLV	0	53.4	0	0	2.2E2	1.455
24525	6859	Sisma X SLD	52.6	0	0	0	2.2E2	1.455	24526	6859	Sisma Y SLD	0	52.6	0	0	2.2E2	1.455
24527	6860	Sisma X SLV	35.5	0	0	0	1.4E2	1.455	24528	6860	Sisma Y SLV	0	35.5	0	0	1.4E2	1.455
24529	6860	Sisma X SLD	34.9	0	0	0	1.4E2	1.455	24530	6860	Sisma Y SLD	0	34.9	0	0	1.4E2	1.455
24531	6861	Sisma X SLV	58.9	0	0	0	2.4E2	1.456	24532	6861	Sisma Y SLV	0	58.9	0	0	2.4E2	1.456
24533	6861	Sisma X SLD	57.9	0	0	0	2.4E2	1.456	24534	6861	Sisma Y SLD	0	57.9	0	0	2.4E2	1.456
24535	6862	Sisma X SLV	58.9	0	0	0	2.4E2	1.456	24536	6862	Sisma Y SLV	0	58.9	0	0	2.4E2	1.456
24537	6862	Sisma X SLD	57.9	0	0	0	2.4E2	1.456	24538	6862	Sisma Y SLD	0	57.9	0	0	2.4E2	1.456
24539	6863	Sisma X SLV	55.8	0	0	0	2.2E2	1.456	24540	6863	Sisma Y SLV	0	55.8	0	0	2.2E2	1.456
24541	6863	Sisma X SLD	54.9	0	0	0	2.2E2	1.456	24542	6863	Sisma Y SLD	0	54.9	0	0	2.2E2	1.456
24543	6864	Sisma X SLV	35.5	0	0	0	1.4E2	1.456	24544	6864	Sisma Y SLV	0	35.5	0	0	1.4E2	1.456
24545	6864	Sisma X SLD	34.9	0	0	0	1.4E2	1.456	24546	6864	Sisma Y SLD	0	34.9	0	0	1.4E2	1.456
24547	6865	Sisma X SLV	31.7	0	0	0	1.3E2	1.456	24548	6865	Sisma Y SLV	0	31.7	0	0	1.3E2	1.456
24549	6865	Sisma X SLD	31.2	0	0	0	1.3E2	1.456	24550	6865	Sisma Y SLD	0	31.2	0	0	1.3E2	1.456
24551	6866	Sisma X SLV	58.8	0	0	0	2.4E2	1.456	24552	6866	Sisma Y SLV	0	58.8	0	0	2.4E2	1.456
24553	6866	Sisma X SLD	57.9	0	0	0	2.4E2	1.456	24554	6866	Sisma Y SLD	0	57.9	0	0	2.4E2	1.456
24555	6867	Sisma X SLV	58.8	0	0	0	2.4E2	1.456	24556	6867	Sisma Y SLV	0	58.8	0	0	2.4E2	1.456
24557	6867	Sisma X SLD	57.9	0	0	0	2.4E2	1.456	24558	6867	Sisma Y SLD	0	57.9	0	0	2.4E2	1.456
24559	6868	Sisma X SLV	54.6	0	0	0	2.2E2	1.456	24560	6868	Sisma Y SLV	0	54.6	0	0	2.2E2	1.456
24561	6868	Sisma X SLD	53.7	0	0	0	2.2E2	1.456	24562	6868	Sisma Y SLD	0	53.7	0	0	2.2E2	1.456
24563	6869	Sisma X SLV	56.4	0	0	0	2.3E2	1.456	24564	6869	Sisma Y SLV	0	56.4	0	0	2.3E2	1.456
24565	6869	Sisma X SLD	55.5	0	0	0	2.3E2	1.456	24566	6869	Sisma Y SLD	0	55.5	0	0	2.3E2	1.456
24567	6870	Sisma X SLV	56.8	0	0	0	2.3E2	1.456	24568	6870	Sisma Y SLV	0	56.8	0	0	2.3E2	1.456
24569	6870	Sisma X SLD	55.9	0	0	0	2.3E2	1.456	24570	6870	Sisma Y SLD	0	55.9	0	0	2.3E2	1.456
24571	6871	Sisma X SLV	35.5	0	0	0	1.4E2	1.456	24572	6871	Sisma Y SLV	0	35.5	0	0	1.4E2	1.456
24573	6871	Sisma X SLD	35	0	0	0	1.4E2	1.456	24574	6871	Sisma Y SLD	0	35	0	0	1.4E2	1.456
24575	6872	Sisma X SLV	59.3	0	0	0	238.77	1.456	24576	6872	Sisma Y SLV	0	59.3	0	0	238.77	1.456
24577	6872	Sisma X SLD	58.4	0	0	0	238.77	1.456	24578	6872	Sisma Y SLD	0	58.4	0	0	238.77	1.456
24579	6873	Sisma X SLV	59.4	0	0	0	2.4E2	1.456	24580	6873	Sisma Y SLV	0	59.4	0	0	2.4E2	1.456
24581	6873	Sisma X SLD	58.4	0	0	0	2.4E2	1.456	24582	6873	Sisma Y SLD	0	58.4	0	0	2.4E2	1.456
24583	6874	Sisma X SLV	56	0	0	0	2.3E2	1.456	24584	6874	Sisma Y SLV	0	56	0	0	2.3E2	1.456
24585	6874	Sisma X SLD	55.1	0	0	0	2.3E2	1.456	24586	6874	Sisma Y SLD	0	55.1	0	0	2.3E2	1.456
24587	6875	Sisma X SLV	57.4	0	0	0	2.3E2	1.456	24588	6875	Sisma Y SLV	0	57.4	0	0	2.3E2	1.456
24589	6875	Sisma X SLD	56.4	0	0	0	2.3E2	1.456	24590	6875	Sisma Y SLD	0	56.4	0	0	2.3E2	1.456
24591	6876	Sisma X SLV	54.1	0	0	0	2.2E2	1.456	24592	6876	Sisma Y SLV	0	54.1	0	0	2.2E2	1.456
24593	6876	Sisma X SLD	53.3	0	0	0	2.2E2	1.456	24594	6876	Sisma Y SLD	0	53.3	0	0	2.2E2	1.456
24595	6877	Sisma X SLV	59.8	0	0	0	2.4E2	1.456	24596	6877	Sisma Y SLV	0	59.8	0	0	2.4E2	1.456
24597	6877	Sisma X SLD	58.8	0	0	0	2.4E2	1.456	24598	6877	Sisma Y SLD	0	58.8	0	0	2.4E2	1.456
24599	6878	Sisma X SLV	59.8	0	0	0	2.4E2	1.456	24600	6878	Sisma Y SLV	0	59.8	0	0	2.4E2	1.456
24601	6878	Sisma X SLD	58.8	0	0	0	2.4E2	1.456	24602	6878	Sisma Y SLD	0	58.8	0	0	2.4E2	1.456
24603	6879	Sisma X SLV	59.7	0	0	0	2.4E2	1.456	24604	6879	Sisma Y SLV	0	59.7	0	0	2.4E2	1.456
24605	6879	Sisma X SLD	58.7	0	0	0	2.4E2	1.456	24606	6879	Sisma Y SLD	0	58.7	0	0	2.4E2	1.456
24607	6880	Sisma X SLV	59.7	0	0	0	2.4E2	1.456	24608	6880	Sisma Y SLV	0	59.7	0	0	2.4E2	1.456
24609	6880	Sisma X SLD	58.7	0	0	0	2.4E2	1.456	24610	6880	Sisma Y SLD	0	58.7	0	0	2.4E2	1.456
24611	6881	Sisma X SLV	56.2	0	0	0	2.3E2	1.456	24612	6881	Sisma Y SLV	0	56.2	0	0	2.3E2	1.456
24613	6881	Sisma X SLD	55.3	0	0	0	2.3E2	1.456	24614	6881	Sisma Y SLD	0	55.3	0	0	2.3E2	1.456
24615	6882	Sisma X SLV	57.9	0	0	0	2.3E2	1.456	24616	6882	Sisma Y SLV	0	57.9	0	0	2.3E2	1.456
24617	6882	Sisma X SLD	57	0	0	0	2.3E2	1.456	24618	6882	Sisma Y SLD	0	57	0	0	2.3E2	1.456
24619	6883	Sisma X SLV	35.6	0	0	0	1.4E2	1.456	24620	6883	Sisma Y SLV	0	35.6	0	0	1.4E2	1.456
24621	6883	Sisma X SLD	35	0	0	0	1.4E2	1.456	24622	6883	Sisma Y SLD	0	35	0	0	1.4E2	1.456
24623	6884	Sisma X SLV	55.7	0	0	0	2.2E2	1.456	24624	6884	Sisma Y SLV	0	55.7	0	0	2.2E2	1.456
24625	6884	Sisma X SLD	54.8	0	0	0	2.2E2	1.456	24626	6884	Sisma Y SLD	0	54.8	0	0	2.2E2	1.456
24627	6885	Sisma X SLV	57.8	0	0	0	2.3E2	1.456	24628	6885	Sisma Y SLV	0	57.8	0	0	2.3E2	1.456
24629	6885	Sisma X SLD	56.9	0	0	0	2.3E2	1.456	24630	6885	Sisma Y SLD	0	56.9	0	0	2.3E2	1.456
24631	6886	Sisma X SLV	57.6	0	0	0	2.3E2	1.456	24632	6886	Sisma Y SLV	0	57.6	0	0	2.3E2	1.456
24633	6886	Sisma X SLD	56.7	0	0	0	2.3E2	1.456	24634	6886	Sisma Y SLD	0	56.7	0	0	2.3E2	1.456
24635	6887	Sisma X SLV	59.5	0	0	0	239.39	1.456	24636	6887	Sisma Y SLV	0	59.5	0	0	239.39	1.456
24637	6887	Sisma X SLD	58.5	0	0	0	239.39	1.456	24638	6887	Sisma Y SLD	0	58.5	0	0	239.39	1.456
24639	6888	Sisma X SLV	59.5	0	0	0	2.4E2	1.456	24640	6888	Sisma Y SLV	0	59.5	0	0	2.4E2	1.456
24641	6888	Sisma X SLD	58.5	0	0	0	2.4E2	1.456	24642	6888	Sisma Y SLD	0	58.5	0	0	2.4E2	1.456
24643	6889	Sisma X SLV	58.4	0	0	0	2.3E2	1.456	24644	6889	Sisma Y SLV	0	58.4	0	0	2.3E2	1.456
24645	6889	Sisma X SLD	57.4	0	0	0	2.3E2	1.456	24646	6889	Sisma Y SLD	0	57.4	0	0	2.3E2	1.456
24647	6890	Sisma X SLV	35.8	0	0	0	1.4E2	1.456	24648	6890	Sisma Y SLV	0	35.8	0	0	1.4E2	1.456
24649	6890	Sisma X SLD	35.2	0	0	0	1.4E2	1.456	24650	6890	Sisma Y SLD	0	35.2	0	0	1.4E2	1.456
24651	6891	Sisma X SLV	54.9	0	0	0	2.2E2	1.456	24652	6891	Sisma Y SLV	0	54.9	0	0	2.2E2	1.456
24653	6891	Sisma X SLD	54	0	0	0	2.2E2	1.456	24654	6891	Sisma Y SLD	0	54	0	0	2.2E2	1.456
24655	6892	Sisma X SLV	55.5	0	0	0	2.2E2	1.456	24656	6892	Sisma Y SLV	0	55.5	0	0	2.2E2	1.456
24657	6892	Sisma X SLD	54.6	0	0	0	2.2E2	1.456	24658	6892	Sisma Y SLD	0	54.6	0	0	2.2E2	1.456
24659	6893	Sisma X SLV	59.3	0	0	0	2.4E2	1.456	24660	6893	Sisma Y SLV	0	59.3	0	0	2.4E2	1.456
24661	6893	Sisma X SLD	58.4	0	0	0	2.4E2	1.456	24662	6893	Sisma Y SLD	0	58.4	0	0	2.4E2	1.456
24663	6894	Sisma X SLV	59.3	0	0	0	238.7	1.456	24664	6894	Sisma Y SLV	0	59.3	0	0	238.7	1.456
24665	6894	Sisma X SLD	58.4	0	0	0	238.7	1.456	24666	6894	Sisma Y SLD	0	58.4	0	0	238.7	1.456
24667	6895	Sisma X SLV	58.4	0	0	0	2.3E2	1.456	24668	6895	Sisma Y SLV	0	58.4	0	0	2.3E2	1.456
24669	6895	Sisma X SLD	57.4	0	0	0	2.3E2	1.456	24670	6895	Sisma Y SLD	0	57.4	0	0	2.3E2	1.456
24671	6896	Sisma X SLV	55	0	0	0	221.5	1.456	24672	6896	Sisma Y SLV	0	55	0	0	221.5	1.456
24673	6896	Sisma X SLD	54.2	0	0	0	221.5	1.456	24674	6896	Sisma Y SLD	0	54.2	0	0	221.5	1.456
24675	6897	Sisma X SLV	36	0	0	0	1.4E2	1.456	24676	6897	Sisma Y SLV	0	36	0	0	1.4E2	1.456
24677	6897	Sisma X SLD	35.4	0	0	0	1.4E2	1.456	24678	6897	Sisma Y SLD	0	35.4	0	0	1.4E2	1.456
24679	6898	Sisma X SLV	54.6	0	0	0	2.2E2	1.456	24680	6898	Sisma Y SLV	0	54.6	0	0	2.2E2	1.456
24681	6898	Sisma X SLD	53.8	0	0	0	2.2E2	1.456	24682	6898	Sisma Y SLD	0	53.8	0	0	2.2E2	1.456
24683	6899	Sisma X SLV	54.3	0	0	0	2.2E2	1.456	24684	6899	Sisma Y SLV	0	54.3	0	0	2.2E2	1.456
24685	6899	Sisma X SLD	53.5	0	0	0	2.2E2	1.456	24686	6899	Sisma Y SLD	0	53.5	0	0	2.2E2	1.456
24687	6900	Sisma X SLV	61.7	0	0	0	2.5E2	1.456	24688	6900	Sisma Y SLV	0	61.7	0	0	2.5E2	1.456
24689	6900	Sisma X SLD	60.7	0	0	0	2.5E2	1.456	24690	6900	Sisma Y SLD	0	60.7	0	0	2.5E2	1.456
24691	6901	Sisma X SLV	61.8	0	0	0	248.76	1.456	24692	6901	Sisma Y SLV	0	61.8	0	0	248.76	1.456
24693	6901	Sisma X SLD	60.8	0	0	0	248.76	1.456	24694	6901	Sisma Y SLD	0	60.8	0	0	248.76	1.456
24695	6902	Sisma X SLV	55.3	0	0	0	2.2E2	1.456	24696	6902	Sisma Y SLV	0	55.3	0	0	2.2E2	1.456

Indice	Nodo	Condizione	Fx	Fy	Fz	Mz	Peso	Gamma	Indice	Nodo	Condizione	Fx	Fy	Fz	Mz	Peso	Gamma
24697	6902	Sisma X SLD	54.5	0	0	0	2.2E2	1.456	24698	6902	Sisma Y SLD	0	54.5	0	0	2.2E2	1.456
24699	6903	Sisma X SLV	55	0	0	0	2.2E2	1.456	24700	6903	Sisma Y SLV	0	55	0	0	2.2E2	1.456
24701	6903	Sisma X SLD	54.1	0	0	0	2.2E2	1.456	24702	6903	Sisma Y SLD	0	54.1	0	0	2.2E2	1.456
24703	6904	Sisma X SLV	61.4	0	0	0	2.5E2	1.456	24704	6904	Sisma Y SLV	0	61.4	0	0	2.5E2	1.456
24705	6904	Sisma X SLD	60.4	0	0	0	2.5E2	1.456	24706	6904	Sisma Y SLD	0	60.4	0	0	2.5E2	1.456
24707	6905	Sisma X SLV	61.8	0	0	0	2.5E2	1.456	24708	6905	Sisma Y SLV	0	61.8	0	0	2.5E2	1.456
24709	6905	Sisma X SLD	60.8	0	0	0	2.5E2	1.456	24710	6905	Sisma Y SLD	0	60.8	0	0	2.5E2	1.456
24711	6906	Sisma X SLV	59.2	0	0	0	2.4E2	1.456	24712	6906	Sisma Y SLV	0	59.2	0	0	2.4E2	1.456
24713	6906	Sisma X SLD	58.3	0	0	0	2.4E2	1.456	24714	6906	Sisma Y SLD	0	58.3	0	0	2.4E2	1.456
24715	6907	Sisma X SLV	59.2	0	0	0	2.4E2	1.456	24716	6907	Sisma Y SLV	0	59.2	0	0	2.4E2	1.456
24717	6907	Sisma X SLD	58.3	0	0	0	2.4E2	1.456	24718	6907	Sisma Y SLD	0	58.3	0	0	2.4E2	1.456
24719	6908	Sisma X SLV	61.4	0	0	0	2.5E2	1.456	24720	6908	Sisma Y SLV	0	61.4	0	0	2.5E2	1.456
24721	6908	Sisma X SLD	60.5	0	0	0	2.5E2	1.456	24722	6908	Sisma Y SLD	0	60.5	0	0	2.5E2	1.456
24723	6909	Sisma X SLV	36.3	0	0	0	1.5E2	1.456	24724	6909	Sisma Y SLV	0	36.3	0	0	1.5E2	1.456
24725	6909	Sisma X SLD	35.7	0	0	0	1.5E2	1.456	24726	6909	Sisma Y SLD	0	35.7	0	0	1.5E2	1.456
24727	6910	Sisma X SLV	58	0	0	0	233.44	1.456	24728	6910	Sisma Y SLV	0	58	0	0	233.44	1.456
24729	6910	Sisma X SLD	57.1	0	0	0	233.44	1.456	24730	6910	Sisma Y SLD	0	57.1	0	0	233.44	1.456
24731	6911	Sisma X SLV	61.2	0	0	0	2.5E2	1.456	24732	6911	Sisma Y SLV	0	61.2	0	0	2.5E2	1.456
24733	6911	Sisma X SLD	60.2	0	0	0	2.5E2	1.456	24734	6911	Sisma Y SLD	0	60.2	0	0	2.5E2	1.456
24735	6912	Sisma X SLV	64.3	0	0	0	2.6E2	1.456	24736	6912	Sisma Y SLV	0	64.3	0	0	2.6E2	1.456
24737	6912	Sisma X SLD	63.2	0	0	0	2.6E2	1.456	24738	6912	Sisma Y SLD	0	63.2	0	0	2.6E2	1.456
24739	6913	Sisma X SLV	59.8	0	0	0	2.4E2	1.456	24740	6913	Sisma Y SLV	0	59.8	0	0	2.4E2	1.456
24741	6913	Sisma X SLD	58.8	0	0	0	2.4E2	1.456	24742	6913	Sisma Y SLD	0	58.8	0	0	2.4E2	1.456
24743	6914	Sisma X SLV	61.2	0	0	0	2.5E2	1.456	24744	6914	Sisma Y SLV	0	61.2	0	0	2.5E2	1.456
24745	6914	Sisma X SLD	60.3	0	0	0	2.5E2	1.456	24746	6914	Sisma Y SLD	0	60.3	0	0	2.5E2	1.456
24747	6915	Sisma X SLV	36.1	0	0	0	1.5E2	1.456	24748	6915	Sisma Y SLV	0	36.1	0	0	1.5E2	1.456
24749	6915	Sisma X SLD	35.5	0	0	0	1.5E2	1.456	24750	6915	Sisma Y SLD	0	35.5	0	0	1.5E2	1.456
24751	6916	Sisma X SLV	36.1	0	0	0	145.31	1.456	24752	6916	Sisma Y SLV	0	36.1	0	0	145.31	1.456
24753	6916	Sisma X SLD	35.5	0	0	0	145.31	1.456	24754	6916	Sisma Y SLD	0	35.5	0	0	145.31	1.456
24755	6917	Sisma X SLV	36.1	0	0	0	1.5E2	1.456	24756	6917	Sisma Y SLV	0	36.1	0	0	1.5E2	1.456
24757	6917	Sisma X SLD	35.5	0	0	0	1.5E2	1.456	24758	6917	Sisma Y SLD	0	35.5	0	0	1.5E2	1.456
24759	6918	Sisma X SLV	36.1	0	0	0	1.5E2	1.456	24760	6918	Sisma Y SLV	0	36.1	0	0	1.5E2	1.456
24761	6918	Sisma X SLD	35.5	0	0	0	1.5E2	1.456	24762	6918	Sisma Y SLD	0	35.5	0	0	1.5E2	1.456
24763	6919	Sisma X SLV	36.1	0	0	0	1.5E2	1.456	24764	6919	Sisma Y SLV	0	36.1	0	0	1.5E2	1.456
24765	6919	Sisma X SLD	35.6	0	0	0	1.5E2	1.456	24766	6919	Sisma Y SLD	0	35.6	0	0	1.5E2	1.456
24767	6920	Sisma X SLV	36.1	0	0	0	1.5E2	1.456	24768	6920	Sisma Y SLV	0	36.1	0	0	1.5E2	1.456
24769	6920	Sisma X SLD	35.5	0	0	0	1.5E2	1.456	24770	6920	Sisma Y SLD	0	35.5	0	0	1.5E2	1.456
24771	6921	Sisma X SLV	36.2	0	0	0	145.78	1.456	24772	6921	Sisma Y SLV	0	36.2	0	0	145.78	1.456
24773	6921	Sisma X SLD	35.7	0	0	0	145.78	1.456	24774	6921	Sisma Y SLD	0	35.7	0	0	145.78	1.456
24775	6922	Sisma X SLV	36.1	0	0	0	1.5E2	1.456	24776	6922	Sisma Y SLV	0	36.1	0	0	1.5E2	1.456
24777	6922	Sisma X SLD	35.5	0	0	0	1.5E2	1.456	24778	6922	Sisma Y SLD	0	35.5	0	0	1.5E2	1.456
24779	6923	Sisma X SLV	36.4	0	0	0	1.5E2	1.456	24780	6923	Sisma Y SLV	0	36.4	0	0	1.5E2	1.456
24781	6923	Sisma X SLD	35.8	0	0	0	1.5E2	1.456	24782	6923	Sisma Y SLD	0	35.8	0	0	1.5E2	1.456
24783	6924	Sisma X SLV	36.1	0	0	0	1.5E2	1.456	24784	6924	Sisma Y SLV	0	36.1	0	0	1.5E2	1.456
24785	6924	Sisma X SLD	35.5	0	0	0	1.5E2	1.456	24786	6924	Sisma Y SLD	0	35.5	0	0	1.5E2	1.456
24787	6925	Sisma X SLV	36.7	0	0	0	1.5E2	1.456	24788	6925	Sisma Y SLV	0	36.7	0	0	1.5E2	1.456
24789	6925	Sisma X SLD	36.1	0	0	0	1.5E2	1.456	24790	6925	Sisma Y SLD	0	36.1	0	0	1.5E2	1.456
24791	6926	Sisma X SLV	66.8	0	0	0	268.71	1.456	24792	6926	Sisma Y SLV	0	66.8	0	0	268.71	1.456
24793	6926	Sisma X SLD	65.7	0	0	0	268.71	1.456	24794	6926	Sisma Y SLD	0	65.7	0	0	268.71	1.456
24795	6927	Sisma X SLV	57.9	0	0	0	2.3E2	1.456	24796	6927	Sisma Y SLV	0	57.9	0	0	2.3E2	1.456
24797	6927	Sisma X SLD	57	0	0	0	2.3E2	1.456	24798	6927	Sisma Y SLD	0	57	0	0	2.3E2	1.456
24799	6928	Sisma X SLV	36.1	0	0	0	1.5E2	1.456	24800	6928	Sisma Y SLV	0	36.1	0	0	1.5E2	1.456
24801	6928	Sisma X SLD	35.5	0	0	0	1.5E2	1.456	24802	6928	Sisma Y SLD	0	35.5	0	0	1.5E2	1.456
24803	6929	Sisma X SLV	36.9	0	0	0	1.5E2	1.456	24804	6929	Sisma Y SLV	0	36.9	0	0	1.5E2	1.456
24805	6929	Sisma X SLD	36.3	0	0	0	1.5E2	1.456	24806	6929	Sisma Y SLD	0	36.3	0	0	1.5E2	1.456
24807	6930	Sisma X SLV	62.9	0	0	0	2.5E2	1.456	24808	6930	Sisma Y SLV	0	62.9	0	0	2.5E2	1.456
24809	6930	Sisma X SLD	61.9	0	0	0	2.5E2	1.456	24810	6930	Sisma Y SLD	0	61.9	0	0	2.5E2	1.456
24811	6931	Sisma X SLV	57	0	0	0	2.3E2	1.456	24812	6931	Sisma Y SLV	0	57	0	0	2.3E2	1.456
24813	6931	Sisma X SLD	56.1	0	0	0	2.3E2	1.456	24814	6931	Sisma Y SLD	0	56.1	0	0	2.3E2	1.456
24815	6932	Sisma X SLV	56.6	0	0	0	2.3E2	1.456	24816	6932	Sisma Y SLV	0	56.6	0	0	2.3E2	1.456
24817	6932	Sisma X SLD	55.7	0	0	0	2.3E2	1.456	24818	6932	Sisma Y SLD	0	55.7	0	0	2.3E2	1.456
24819	6933	Sisma X SLV	56.7	0	0	0	2.3E2	1.456	24820	6933	Sisma Y SLV	0	56.7	0	0	2.3E2	1.456
24821	6933	Sisma X SLD	55.8	0	0	0	2.3E2	1.456	24822	6933	Sisma Y SLD	0	55.8	0	0	2.3E2	1.456
24823	6934	Sisma X SLV	80.3	0	0	0	3.2E2	1.456	24824	6934	Sisma Y SLV	0	80.3	0	0	3.2E2	1.456
24825	6934	Sisma X SLD	79	0	0	0	3.2E2	1.456	24826	6934	Sisma Y SLD	0	79	0	0	3.2E2	1.456
24827	6935	Sisma X SLV	75	0	0	0	3.0E2	1.456	24828	6935	Sisma Y SLV	0	75	0	0	3.0E2	1.456
24829	6935	Sisma X SLD	73.8	0	0	0	3.0E2	1.456	24830	6935	Sisma Y SLD	0	73.8	0	0	3.0E2	1.456
24831	6936	Sisma X SLV	71.6	0	0	0	288.29	1.456	24832	6936	Sisma Y SLV	0	71.6	0	0	288.29	1.456
24833	6936	Sisma X SLD	70.5	0	0	0	288.29	1.456	24834	6936	Sisma Y SLD	0	70.5	0	0	288.29	1.456
24835	6937	Sisma X SLV	71.3	0	0	0	2.9E2	1.456	24836	6937	Sisma Y SLV	0	71.3	0	0	2.9E2	1.456
24837	6937	Sisma X SLD	70.2	0	0	0	2.9E2	1.456	24838	6937	Sisma Y SLD	0	70.2	0	0	2.9E2	1.456
24839	6938	Sisma X SLV	82.3	0	0	0	3.3E2	1.456	24840	6938	Sisma Y SLV	0	82.3	0	0	3.3E2	1.456
24841	6938	Sisma X SLD	81	0	0	0	3.3E2	1.456	24842	6938	Sisma Y SLD	0	81	0	0	3.3E2	1.456
24843	6939	Sisma X SLV	82.5	0	0	0	3.3E2	1.456	24844	6939	Sisma Y SLV	0	82.5	0	0	3.3E2	1.456
24845	6939	Sisma X SLD	81.2	0	0	0	3.3E2	1.456	24846	6939	Sisma Y SLD	0	81.2	0	0	3.3E2	1.456
24847	6940	Sisma X SLV	57.6	0	0	0	2.3E2	1.456	24848	6940	Sisma Y SLV	0	57.6	0	0	2.3E2	1.456
24849	6940	Sisma X SLD	56.7	0	0	0	2.3E2	1.456	24850	6940	Sisma Y SLD	0	56.7	0	0	2.3E2	1.456
24851	6941	Sisma X SLV	28.8	0	0	0	1.2E2	1.456	24852	6941	Sisma Y SLV	0	28.8	0	0	1.2E2	1.456
24853	6941	Sisma X SLD	28.3	0	0	0	1.2E2	1.456	24854	6941	Sisma Y SLD	0	28.3	0	0	1.2E2	1.456
24855	6942	Sisma X SLV	36.7	0	0	0	1.5E2	1.456	24856	6942	Sisma Y SLV	0	36.7	0	0	1.5E2	1.456
24857	6942	Sisma X SLD	36.1	0	0	0	1.5E2	1.456	24858	6942	Sisma Y SLD	0	36.1	0	0	1.5E2	1.456
24859	6943	Sisma X SLV	45.1	0	0	0	1.8E2	1.457	24860	6943	Sisma Y SLV	0	45.1	0	0	1.8E2	1.457
24861	6943	Sisma X SLD	44.4	0	0	0	1.8E2	1.457	24862	6943	Sisma Y SLD	0	44.4	0	0	1.8E2	1.457
24863	6944	Sisma X SLV	36.6	0	0	0	1.5E2	1.457	24864	6944	Sisma Y SLV	0	36.6	0	0	1.5E2	1.457
24865	6944	Sisma X SLD	36.1	0	0	0	1.5E2	1.457	24866	6944	Sisma Y SLD	0	36.1	0	0	1.5E2	1.457
24867	6945	Sisma X SLV	36.6	0	0	0	1.5E2	1.457	24868	6945	Sisma Y SLV	0	36.6	0	0	1.5E2	1.457
24869	6945	Sisma X SLD	36	0	0	0	1.5E2	1.457	24870	6945	Sisma Y SLD	0	36	0	0	1.5E2	1.457
24871	6946	Sisma X SLV	37	0	0	0	1.5E2	1.457	24872	6946	Sisma Y SLV	0	37	0	0	1.5E2	1.457
24873	6946	Sisma X SLD	36.5	0	0	0	1.5E2	1.457	24874	6946	Sisma Y SLD	0	36.5	0	0	1.5E2	1.457
24875	6947	Sisma X SLV	33.8	0	0	0	1.4E2	1.457	24876	6947	Sisma Y SLV	0	33.8	0	0	1.4E2	1.457
24877	6947	Sisma X SLD	33.3	0	0	0	1.4E2	1.457	24878	6947	Sisma Y SLD	0	33.3	0	0	1.4E2	1.457
24879	6948	Sisma X SLV	36.4	0	0	0	1.5E2	1.457	24880	6948	Sisma Y SLV	0	36.4	0	0	1.5E2	1.457
24881	6948	Sisma X SLD	35.8	0	0	0	1.5E2	1.457	24882	6948	Sisma Y SLD	0	35.8	0	0	1.5E2	1.457
24883	6949	Sisma X SLV	57.7	0	0	0	2.3E2	1.457	24884	6949	Sisma Y SLV	0	57.7	0	0	2.3E2	1.457
24885	6949	Sisma X SLD	56.8	0	0	0	2.3E2	1.457	24886	6949	Sisma Y SLD	0	56.8	0	0	2.3E2	1.457
24887	6950	Sisma X SLV	28.3	0	0	0	1.1E2	1.457	24888	6950	Sisma Y SLV	0	28.3	0	0	1.1E2	1.457
24889	6950	Sisma X SLD	27.8	0	0	0	1.1E2	1.457	24890	6950	Sisma Y SLD	0	27.8	0	0	1.1E2	1.457
24891	6951	Sisma X SLV	36.2	0	0	0	1.5E2	1.457	24892	6951	Sisma Y SLV	0	36.2	0	0	1.5E2	1.457
24893	6951	Sisma X SLD	35.6	0	0	0	1.5E2	1.457	24894	6951	Sisma Y SLD	0	35.6	0	0	1.5E2	1.457
24895	6952	Sisma X SLV	57.1	0	0	0	2.3E2	1.458	24896	6952	Sisma Y SLV	0	57.1	0	0	2.3E2	1.458
24897	6952	Sisma X SLD	56.2	0	0	0	2.3E2	1.458	24898	6952	Sisma Y SLD	0	56.2	0	0	2.3E2	1.458
24899	6953	Sisma X SLV	57.1	0	0	0	2.3E2	1.458	24900	6953	Sisma Y SLV	0	57.1	0	0	2.3E2	1.458
24901	6953	Sisma X SLD	56.2	0	0	0	2.3E2	1.458	24902	6953	Sisma Y SLD	0	56.2	0	0	2.3E2	1.458
24903	6954	Sisma X SLV	33.8	0	0	0	1.4E2	1.458	24904	6954	Sisma Y SLV	0	33.8	0	0	1.4E2	1.458

muratura

Indice	Nodo	Condizione	Fx	Fy	Fz	Mz	Peso	Gamma	Indice	Nodo	Condizione	Fx	Fy	Fz	Mz	Peso	Gamma
24905	6954	Sisma X SLD	33.2	0	0	0	1.4E2	1.458	24906	6954	Sisma Y SLD	0	33.2	0	0	1.4E2	1.458
24907	6955	Sisma X SLV	35.8	0	0	0	1.4E2	1.458	24908	6955	Sisma Y SLV	0	35.8	0	0	1.4E2	1.458
24909	6955	Sisma X SLD	35.3	0	0	0	1.4E2	1.458	24910	6955	Sisma Y SLD	0	35.3	0	0	1.4E2	1.458
24911	6956	Sisma X SLV	30.5	0	0	0	1.2E2	1.458	24912	6956	Sisma Y SLV	0	30.5	0	0	1.2E2	1.458
24913	6956	Sisma X SLD	30	0	0	0	1.2E2	1.458	24914	6956	Sisma Y SLD	0	30	0	0	1.2E2	1.458
24915	6957	Sisma X SLV	33.8	0	0	0	135.9	1.458	24916	6957	Sisma Y SLV	0	33.8	0	0	135.9	1.458
24917	6957	Sisma X SLD	33.3	0	0	0	135.9	1.458	24918	6957	Sisma Y SLD	0	33.3	0	0	135.9	1.458
24919	6958	Sisma X SLV	35.4	0	0	0	1.4E2	1.458	24920	6958	Sisma Y SLV	0	35.4	0	0	1.4E2	1.458
24921	6958	Sisma X SLD	34.8	0	0	0	1.4E2	1.458	24922	6958	Sisma Y SLD	0	34.8	0	0	1.4E2	1.458
24923	6959	Sisma X SLV	34.9	0	0	0	1.4E2	1.459	24924	6959	Sisma Y SLV	0	34.9	0	0	1.4E2	1.459
24925	6959	Sisma X SLD	34.3	0	0	0	1.4E2	1.459	24926	6959	Sisma Y SLD	0	34.3	0	0	1.4E2	1.459
24927	6960	Sisma X SLV	34	0	0	0	1.4E2	1.459	24928	6960	Sisma Y SLV	0	34	0	0	1.4E2	1.459
24929	6960	Sisma X SLD	33.5	0	0	0	1.4E2	1.459	24930	6960	Sisma Y SLD	0	33.5	0	0	1.4E2	1.459
24931	6961	Sisma X SLV	38.2	0	0	0	1.5E2	1.459	24932	6961	Sisma Y SLV	0	38.2	0	0	1.5E2	1.459
24933	6961	Sisma X SLD	37.6	0	0	0	1.5E2	1.459	24934	6961	Sisma Y SLD	0	37.6	0	0	1.5E2	1.459
24935	6962	Sisma X SLV	34.4	0	0	0	1.4E2	1.459	24936	6962	Sisma Y SLV	0	34.4	0	0	1.4E2	1.459
24937	6962	Sisma X SLD	33.8	0	0	0	1.4E2	1.459	24938	6962	Sisma Y SLD	0	33.8	0	0	1.4E2	1.459
24939	6963	Sisma X SLV	57.7	0	0	0	2.3E2	1.459	24940	6963	Sisma Y SLV	0	57.7	0	0	2.3E2	1.459
24941	6963	Sisma X SLD	56.8	0	0	0	2.3E2	1.459	24942	6963	Sisma Y SLD	0	56.8	0	0	2.3E2	1.459
24943	6964	Sisma X SLV	59.4	0	0	0	2.4E2	1.459	24944	6964	Sisma Y SLV	0	59.4	0	0	2.4E2	1.459
24945	6964	Sisma X SLD	58.4	0	0	0	2.4E2	1.459	24946	6964	Sisma Y SLD	0	58.4	0	0	2.4E2	1.459
24947	6965	Sisma X SLV	59.4	0	0	0	2.4E2	1.459	24948	6965	Sisma Y SLV	0	59.4	0	0	2.4E2	1.459
24949	6965	Sisma X SLD	58.4	0	0	0	2.4E2	1.459	24950	6965	Sisma Y SLD	0	58.4	0	0	2.4E2	1.459
24951	6966	Sisma X SLV	36.6	0	0	0	1.5E2	1.459	24952	6966	Sisma Y SLV	0	36.6	0	0	1.5E2	1.459
24953	6966	Sisma X SLD	36	0	0	0	1.5E2	1.459	24954	6966	Sisma Y SLD	0	36	0	0	1.5E2	1.459
24955	6967	Sisma X SLV	27.5	0	0	0	1.1E2	1.46	24956	6967	Sisma Y SLV	0	27.5	0	0	1.1E2	1.46
24957	6967	Sisma X SLD	27	0	0	0	1.1E2	1.46	24958	6967	Sisma Y SLD	0	27	0	0	1.1E2	1.46
24959	6968	Sisma X SLV	41.3	0	0	0	1.7E2	1.46	24960	6968	Sisma Y SLV	0	41.3	0	0	1.7E2	1.46
24961	6968	Sisma X SLD	40.6	0	0	0	1.7E2	1.46	24962	6968	Sisma Y SLD	0	40.6	0	0	1.7E2	1.46
24963	6969	Sisma X SLV	41.3	0	0	0	1.7E2	1.46	24964	6969	Sisma Y SLV	0	41.3	0	0	1.7E2	1.46
24965	6969	Sisma X SLD	40.6	0	0	0	1.7E2	1.46	24966	6969	Sisma Y SLD	0	40.6	0	0	1.7E2	1.46
24967	6970	Sisma X SLV	56.4	0	0	0	226.08	1.461	24968	6970	Sisma Y SLV	0	56.4	0	0	226.08	1.461
24969	6970	Sisma X SLD	55.5	0	0	0	226.08	1.461	24970	6970	Sisma Y SLD	0	55.5	0	0	226.08	1.461
24971	6971	Sisma X SLV	56.4	0	0	0	226.08	1.461	24972	6971	Sisma Y SLV	0	56.4	0	0	226.08	1.461
24973	6971	Sisma X SLD	55.5	0	0	0	226.08	1.461	24974	6971	Sisma Y SLD	0	55.5	0	0	226.08	1.461
24975	6972	Sisma X SLV	56.9	0	0	0	2.3E2	1.461	24976	6972	Sisma Y SLV	0	56.9	0	0	2.3E2	1.461
24977	6972	Sisma X SLD	56	0	0	0	2.3E2	1.461	24978	6972	Sisma Y SLD	0	56	0	0	2.3E2	1.461
24979	6973	Sisma X SLV	51.7	0	0	0	2.1E2	1.461	24980	6973	Sisma Y SLV	0	51.7	0	0	2.1E2	1.461
24981	6973	Sisma X SLD	50.9	0	0	0	2.1E2	1.461	24982	6973	Sisma Y SLD	0	50.9	0	0	2.1E2	1.461
24983	6974	Sisma X SLV	51.7	0	0	0	2.1E2	1.461	24984	6974	Sisma Y SLV	0	51.7	0	0	2.1E2	1.461
24985	6974	Sisma X SLD	50.9	0	0	0	2.1E2	1.461	24986	6974	Sisma Y SLD	0	50.9	0	0	2.1E2	1.461
24987	6975	Sisma X SLV	22.8	0	0	0	91.391	1.462	24988	6975	Sisma Y SLV	0	22.8	0	0	91.391	1.462
24989	6975	Sisma X SLD	22.4	0	0	0	91.391	1.462	24990	6975	Sisma Y SLD	0	22.4	0	0	91.391	1.462
24991	6976	Sisma X SLV	58.5	0	0	0	2.3E2	1.462	24992	6976	Sisma Y SLV	0	58.5	0	0	2.3E2	1.462
24993	6976	Sisma X SLD	57.6	0	0	0	2.3E2	1.462	24994	6976	Sisma Y SLD	0	57.6	0	0	2.3E2	1.462
24995	6977	Sisma X SLV	58.5	0	0	0	2.3E2	1.462	24996	6977	Sisma Y SLV	0	58.5	0	0	2.3E2	1.462
24997	6977	Sisma X SLD	57.6	0	0	0	2.3E2	1.462	24998	6977	Sisma Y SLD	0	57.6	0	0	2.3E2	1.462
24999	6978	Sisma X SLV	36.1	0	0	0	1.4E2	1.462	25000	6978	Sisma Y SLV	0	36.1	0	0	1.4E2	1.462
25001	6978	Sisma X SLD	35.5	0	0	0	1.4E2	1.462	25002	6978	Sisma Y SLD	0	35.5	0	0	1.4E2	1.462
25003	6979	Sisma X SLV	37.4	0	0	0	1.5E2	1.463	25004	6979	Sisma Y SLV	0	37.4	0	0	1.5E2	1.463
25005	6979	Sisma X SLD	36.8	0	0	0	1.5E2	1.463	25006	6979	Sisma Y SLD	0	36.8	0	0	1.5E2	1.463
25007	6980	Sisma X SLV	59.1	0	0	0	2.4E2	1.463	25008	6980	Sisma Y SLV	0	59.1	0	0	2.4E2	1.463
25009	6980	Sisma X SLD	58.2	0	0	0	2.4E2	1.463	25010	6980	Sisma Y SLD	0	58.2	0	0	2.4E2	1.463
25011	6981	Sisma X SLV	56.1	0	0	0	2.2E2	1.463	25012	6981	Sisma Y SLV	0	56.1	0	0	2.2E2	1.463
25013	6981	Sisma X SLD	55.2	0	0	0	2.2E2	1.463	25014	6981	Sisma Y SLD	0	55.2	0	0	2.2E2	1.463
25015	6982	Sisma X SLV	26.7	0	0	0	1.1E2	1.464	25016	6982	Sisma Y SLV	0	26.7	0	0	1.1E2	1.464
25017	6982	Sisma X SLD	26.3	0	0	0	1.1E2	1.464	25018	6982	Sisma Y SLD	0	26.3	0	0	1.1E2	1.464
25019	6983	Sisma X SLV	55.4	0	0	0	2.2E2	1.464	25020	6983	Sisma Y SLV	0	55.4	0	0	2.2E2	1.464
25021	6983	Sisma X SLD	54.5	0	0	0	2.2E2	1.464	25022	6983	Sisma Y SLD	0	54.5	0	0	2.2E2	1.464
25023	6984	Sisma X SLV	55.4	0	0	0	2.2E2	1.464	25024	6984	Sisma Y SLV	0	55.4	0	0	2.2E2	1.464
25025	6984	Sisma X SLD	54.5	0	0	0	2.2E2	1.464	25026	6984	Sisma Y SLD	0	54.5	0	0	2.2E2	1.464
25027	6985	Sisma X SLV	56	0	0	0	2.2E2	1.464	25028	6985	Sisma Y SLV	0	56	0	0	2.2E2	1.464
25029	6985	Sisma X SLD	55.1	0	0	0	2.2E2	1.464	25030	6985	Sisma Y SLD	0	55.1	0	0	2.2E2	1.464
25031	6986	Sisma X SLV	55.7	0	0	0	222.79	1.464	25032	6986	Sisma Y SLV	0	55.7	0	0	222.79	1.464
25033	6986	Sisma X SLD	54.8	0	0	0	222.79	1.464	25034	6986	Sisma Y SLD	0	54.8	0	0	222.79	1.464
25035	6987	Sisma X SLV	57.4	0	0	0	2.3E2	1.465	25036	6987	Sisma Y SLV	0	57.4	0	0	2.3E2	1.465
25037	6987	Sisma X SLD	56.5	0	0	0	2.3E2	1.465	25038	6987	Sisma Y SLD	0	56.5	0	0	2.3E2	1.465
25039	6988	Sisma X SLV	57.5	0	0	0	2.3E2	1.465	25040	6988	Sisma Y SLV	0	57.5	0	0	2.3E2	1.465
25041	6988	Sisma X SLD	56.6	0	0	0	2.3E2	1.465	25042	6988	Sisma Y SLD	0	56.6	0	0	2.3E2	1.465
25043	6989	Sisma X SLV	35.5	0	0	0	1.4E2	1.465	25044	6989	Sisma Y SLV	0	35.5	0	0	1.4E2	1.465
25045	6989	Sisma X SLD	34.9	0	0	0	1.4E2	1.465	25046	6989	Sisma Y SLD	0	34.9	0	0	1.4E2	1.465
25047	6990	Sisma X SLV	26.9	0	0	0	1.1E2	1.466	25048	6990	Sisma Y SLV	0	26.9	0	0	1.1E2	1.466
25049	6990	Sisma X SLD	26.5	0	0	0	1.1E2	1.466	25050	6990	Sisma Y SLD	0	26.5	0	0	1.1E2	1.466
25051	6991	Sisma X SLV	26.9	0	0	0	1.1E2	1.466	25052	6991	Sisma Y SLV	0	26.9	0	0	1.1E2	1.466
25053	6991	Sisma X SLD	26.5	0	0	0	1.1E2	1.466	25054	6991	Sisma Y SLD	0	26.5	0	0	1.1E2	1.466
25055	6992	Sisma X SLV	36.4	0	0	0	1.5E2	1.467	25056	6992	Sisma Y SLV	0	36.4	0	0	1.5E2	1.467
25057	6992	Sisma X SLD	35.8	0	0	0	1.5E2	1.467	25058	6992	Sisma Y SLD	0	35.8	0	0	1.5E2	1.467
25059	6993	Sisma X SLV	25.3	0	0	0	1.0E2	1.467	25060	6993	Sisma Y SLV	0	25.3	0	0	1.0E2	1.467
25061	6993	Sisma X SLD	24.9	0	0	0	1.0E2	1.467	25062	6993	Sisma Y SLD	0	24.9	0	0	1.0E2	1.467
25063	6994	Sisma X SLV	25.3	0	0	0	1.0E2	1.467	25064	6994	Sisma Y SLV	0	25.3	0	0	1.0E2	1.467
25065	6994	Sisma X SLD	24.9	0	0	0	1.0E2	1.467	25066	6994	Sisma Y SLD	0	24.9	0	0	1.0E2	1.467
25067	6995	Sisma X SLV	25.3	0	0	0	100.88	1.468	25068	6995	Sisma Y SLV	0	25.3	0	0	100.88	1.468
25069	6995	Sisma X SLD	24.9	0	0	0	100.88	1.468	25070	6995	Sisma Y SLD	0	24.9	0	0	100.88	1.468
25071	6996	Sisma X SLV	25.3	0	0	0	100.88	1.468	25072	6996	Sisma Y SLV	0	25.3	0	0	100.88	1.468
25073	6996	Sisma X SLD	24.9	0	0	0	100.88	1.468	25074	6996	Sisma Y SLD	0	24.9	0	0	100.88	1.468
25075	6997	Sisma X SLV	49.9	0	0	0	2.0E2	1.468	25076	6997	Sisma Y SLV	0	49.9	0	0	2.0E2	1.468
25077	6997	Sisma X SLD	49.1	0	0	0	2.0E2	1.468	25078	6997	Sisma Y SLD	0	49.1	0	0	2.0E2	1.468
25079	6998	Sisma X SLV	49.9	0	0	0	2.0E2	1.468	25080	6998	Sisma Y SLV	0	49.9	0	0	2.0E2	1.468
25081	6998	Sisma X SLD	49.1	0	0	0	2.0E2	1.468	25082	6998	Sisma Y SLD	0	49.1	0	0	2.0E2	1.468
25083	6999	Sisma X SLV	54.1	0	0	0	2.2E2	1.468	25084	6999	Sisma Y SLV	0	54.1	0	0	2.2E2	1.468
25085	6999	Sisma X SLD	53.2	0	0	0	2.2E2	1.468	25086	6999	Sisma Y SLD	0	53.2	0	0	2.2E2	1.468
25087	7000	Sisma X SLV	54.1	0	0	0	2.2E2	1.468	25088	7000	Sisma Y SLV	0	54.1	0	0	2.2E2	1.468
25089	7000	Sisma X SLD	53.2	0	0	0	2.2E2	1.468	25090	7000	Sisma Y SLD	0	53.2	0	0	2.2E2	1.468
25091	7001	Sisma X SLV	54.2	0	0	0	216.37	1.468	25092	7001	Sisma Y SLV	0	54.2	0	0	216.37	1.468
25093	7001	Sisma X SLD	53.3	0	0	0	216.37	1.468	25094	7001	Sisma Y SLD	0	53.3	0	0	216.37	1.468
25095	7002	Sisma X SLV	56	0	0	0	2.2E2	1.469	25096	7002	Sisma Y SLV	0	56	0	0	2.2E2	1.469
25097	7002	Sisma X SLD	55.1	0	0	0	2.2E2	1.469	25098	7002	Sisma Y SLD	0	55.1	0	0	2.2E2	1.469
25099	7003	Sisma X SLV	34.6	0	0	0	1.4E2	1.469	25100	7003	Sisma Y SLV	0	34.6	0	0	1.4E2	1.469
25101	7003	Sisma X SLD	34.1	0	0	0	1.4E2	1.469	25102	7003	Sisma Y SLD	0	34.1	0	0	1.4E2	1.469
25103	7004	Sisma X SLV	56	0	0	0	2.2E2	1.469	25104	7004	Sisma Y SLV	0	56	0	0	2.2E2	1.469
25105	7004	Sisma X SLD	55.1	0	0	0	2.2E2	1.469	25106	7004	Sisma Y SLD	0	55.1	0	0	2.2E2	1.469

Indice	Nodo	Condizione	Fx	Fy	Fz	Mz	Peso	Gamma	Indice	Nodo	Condizione	Fx	Fy	Fz	Mz	Peso	Gamma
25107	7005	Sisma X SLV	55.4	0	0	0	2.2E2	1.47	25108	7005	Sisma Y SLV	0	55.4	0	0	2.2E2	1.47
25109	7005	Sisma X SLD	54.5	0	0	0	2.2E2	1.47	25110	7005	Sisma Y SLD	0	54.5	0	0	2.2E2	1.47
25111	7006	Sisma X SLV	53.1	0	0	0	2.1E2	1.47	25112	7006	Sisma Y SLV	0	53.1	0	0	2.1E2	1.47
25113	7006	Sisma X SLD	52.2	0	0	0	2.1E2	1.47	25114	7006	Sisma Y SLD	0	52.2	0	0	2.1E2	1.47
25115	7007	Sisma X SLV	26	0	0	0	1.0E2	1.47	25116	7007	Sisma Y SLV	0	26	0	0	1.0E2	1.47
25117	7007	Sisma X SLD	25.6	0	0	0	1.0E2	1.47	25118	7007	Sisma Y SLD	0	25.6	0	0	1.0E2	1.47
25119	7008	Sisma X SLV	26	0	0	0	1.0E2	1.47	25120	7008	Sisma Y SLV	0	26	0	0	1.0E2	1.47
25121	7008	Sisma X SLD	25.6	0	0	0	1.0E2	1.47	25122	7008	Sisma Y SLD	0	25.6	0	0	1.0E2	1.47
25123	7009	Sisma X SLV	53.1	0	0	0	2.1E2	1.471	25124	7009	Sisma Y SLV	0	53.1	0	0	2.1E2	1.471
25125	7009	Sisma X SLD	52.2	0	0	0	2.1E2	1.471	25126	7009	Sisma Y SLD	0	52.2	0	0	2.1E2	1.471
25127	7010	Sisma X SLV	35.1	0	0	0	1.4E2	1.471	25128	7010	Sisma Y SLV	0	35.1	0	0	1.4E2	1.471
25129	7010	Sisma X SLD	34.6	0	0	0	1.4E2	1.471	25130	7010	Sisma Y SLD	0	34.6	0	0	1.4E2	1.471
25131	7011	Sisma X SLV	52.7	0	0	0	2.1E2	1.472	25132	7011	Sisma Y SLV	0	52.7	0	0	2.1E2	1.472
25133	7011	Sisma X SLD	51.8	0	0	0	2.1E2	1.472	25134	7011	Sisma Y SLD	0	51.8	0	0	2.1E2	1.472
25135	7012	Sisma X SLV	52.3	0	0	0	2.1E2	1.472	25136	7012	Sisma Y SLV	0	52.3	0	0	2.1E2	1.472
25137	7012	Sisma X SLD	51.5	0	0	0	2.1E2	1.472	25138	7012	Sisma Y SLD	0	51.5	0	0	2.1E2	1.472
25139	7013	Sisma X SLV	52.3	0	0	0	2.1E2	1.472	25140	7013	Sisma Y SLV	0	52.3	0	0	2.1E2	1.472
25141	7013	Sisma X SLD	51.5	0	0	0	2.1E2	1.472	25142	7013	Sisma Y SLD	0	51.5	0	0	2.1E2	1.472
25143	7014	Sisma X SLV	54.2	0	0	0	2.2E2	1.472	25144	7014	Sisma Y SLV	0	54.2	0	0	2.2E2	1.472
25145	7014	Sisma X SLD	53.3	0	0	0	2.2E2	1.472	25146	7014	Sisma Y SLD	0	53.3	0	0	2.2E2	1.472
25147	7015	Sisma X SLV	28.6	0	0	0	1.1E2	1.472	25148	7015	Sisma Y SLV	0	28.6	0	0	1.1E2	1.472
25149	7015	Sisma X SLD	28.1	0	0	0	1.1E2	1.472	25150	7015	Sisma Y SLD	0	28.1	0	0	1.1E2	1.472
25151	7016	Sisma X SLV	28.6	0	0	0	1.1E2	1.472	25152	7016	Sisma Y SLV	0	28.6	0	0	1.1E2	1.472
25153	7016	Sisma X SLD	28.1	0	0	0	1.1E2	1.472	25154	7016	Sisma Y SLD	0	28.1	0	0	1.1E2	1.472
25155	7017	Sisma X SLV	54.2	0	0	0	2.2E2	1.472	25156	7017	Sisma Y SLV	0	54.2	0	0	2.2E2	1.472
25157	7017	Sisma X SLD	53.4	0	0	0	2.2E2	1.472	25158	7017	Sisma Y SLD	0	53.4	0	0	2.2E2	1.472
25159	7018	Sisma X SLV	33.7	0	0	0	1.3E2	1.472	25160	7018	Sisma Y SLV	0	33.7	0	0	1.3E2	1.472
25161	7018	Sisma X SLD	33.2	0	0	0	1.3E2	1.472	25162	7018	Sisma Y SLD	0	33.2	0	0	1.3E2	1.472
25163	7019	Sisma X SLV	48.6	0	0	0	1.9E2	1.473	25164	7019	Sisma Y SLV	0	48.6	0	0	1.9E2	1.473
25165	7019	Sisma X SLD	47.8	0	0	0	1.9E2	1.473	25166	7019	Sisma Y SLD	0	47.8	0	0	1.9E2	1.473
25167	7020	Sisma X SLV	48.6	0	0	0	1.9E2	1.473	25168	7020	Sisma Y SLV	0	48.6	0	0	1.9E2	1.473
25169	7020	Sisma X SLD	47.8	0	0	0	1.9E2	1.473	25170	7020	Sisma Y SLD	0	47.8	0	0	1.9E2	1.473
25171	7021	Sisma X SLV	52.8	0	0	0	209.74	1.474	25172	7021	Sisma Y SLV	0	52.8	0	0	209.74	1.474
25173	7021	Sisma X SLD	51.9	0	0	0	209.74	1.474	25174	7021	Sisma Y SLD	0	51.9	0	0	209.74	1.474
25175	7022	Sisma X SLV	51.5	0	0	0	2.0E2	1.474	25176	7022	Sisma Y SLV	0	51.5	0	0	2.0E2	1.474
25177	7022	Sisma X SLD	50.7	0	0	0	2.0E2	1.474	25178	7022	Sisma Y SLD	0	50.7	0	0	2.0E2	1.474
25179	7023	Sisma X SLV	51.5	0	0	0	2.0E2	1.475	25180	7023	Sisma Y SLV	0	51.5	0	0	2.0E2	1.475
25181	7023	Sisma X SLD	50.7	0	0	0	2.0E2	1.475	25182	7023	Sisma Y SLD	0	50.7	0	0	2.0E2	1.475
25183	7024	Sisma X SLV	51.6	0	0	0	2.0E2	1.475	25184	7024	Sisma Y SLV	0	51.6	0	0	2.0E2	1.475
25185	7024	Sisma X SLD	50.8	0	0	0	2.0E2	1.475	25186	7024	Sisma Y SLD	0	50.8	0	0	2.0E2	1.475
25187	7025	Sisma X SLV	52.3	0	0	0	2.1E2	1.475	25188	7025	Sisma Y SLV	0	52.3	0	0	2.1E2	1.475
25189	7025	Sisma X SLD	51.5	0	0	0	2.1E2	1.475	25190	7025	Sisma Y SLD	0	51.5	0	0	2.1E2	1.475
25191	7026	Sisma X SLV	50.4	0	0	0	2.0E2	1.475	25192	7026	Sisma Y SLV	0	50.4	0	0	2.0E2	1.475
25193	7026	Sisma X SLD	49.6	0	0	0	2.0E2	1.475	25194	7026	Sisma Y SLD	0	49.6	0	0	2.0E2	1.475
25195	7027	Sisma X SLV	50.4	0	0	0	2.0E2	1.475	25196	7027	Sisma Y SLV	0	50.4	0	0	2.0E2	1.475
25197	7027	Sisma X SLD	49.6	0	0	0	2.0E2	1.475	25198	7027	Sisma Y SLD	0	49.6	0	0	2.0E2	1.475
25199	7028	Sisma X SLV	33.8	0	0	0	1.3E2	1.475	25200	7028	Sisma Y SLV	0	33.8	0	0	1.3E2	1.475
25201	7028	Sisma X SLD	33.2	0	0	0	1.3E2	1.475	25202	7028	Sisma Y SLD	0	33.2	0	0	1.3E2	1.475
25203	7029	Sisma X SLV	52.4	0	0	0	2.1E2	1.475	25204	7029	Sisma Y SLV	0	52.4	0	0	2.1E2	1.475
25205	7029	Sisma X SLD	51.5	0	0	0	2.1E2	1.475	25206	7029	Sisma Y SLD	0	51.5	0	0	2.1E2	1.475
25207	7030	Sisma X SLV	23.5	0	0	0	93.336	1.475	25208	7030	Sisma Y SLV	0	23.5	0	0	93.336	1.475
25209	7030	Sisma X SLD	23.1	0	0	0	93.336	1.475	25210	7030	Sisma Y SLD	0	23.1	0	0	93.336	1.475
25211	7031	Sisma X SLV	23.5	0	0	0	93.336	1.475	25212	7031	Sisma Y SLV	0	23.5	0	0	93.336	1.475
25213	7031	Sisma X SLD	23.1	0	0	0	93.336	1.475	25214	7031	Sisma Y SLD	0	23.1	0	0	93.336	1.475
25215	7032	Sisma X SLV	51.5	0	0	0	2.0E2	1.475	25216	7032	Sisma Y SLV	0	51.5	0	0	2.0E2	1.475
25217	7032	Sisma X SLD	50.7	0	0	0	2.0E2	1.475	25218	7032	Sisma Y SLD	0	50.7	0	0	2.0E2	1.475
25219	7033	Sisma X SLV	32.9	0	0	0	1.3E2	1.476	25220	7033	Sisma Y SLV	0	32.9	0	0	1.3E2	1.476
25221	7033	Sisma X SLD	32.4	0	0	0	1.3E2	1.476	25222	7033	Sisma Y SLD	0	32.4	0	0	1.3E2	1.476
25223	7034	Sisma X SLV	48.5	0	0	0	1.9E2	1.476	25224	7034	Sisma Y SLV	0	48.5	0	0	1.9E2	1.476
25225	7034	Sisma X SLD	47.7	0	0	0	1.9E2	1.476	25226	7034	Sisma Y SLD	0	47.7	0	0	1.9E2	1.476
25227	7035	Sisma X SLV	48.5	0	0	0	1.9E2	1.476	25228	7035	Sisma Y SLV	0	48.5	0	0	1.9E2	1.476
25229	7035	Sisma X SLD	47.7	0	0	0	1.9E2	1.476	25230	7035	Sisma Y SLD	0	47.7	0	0	1.9E2	1.476
25231	7036	Sisma X SLV	51.4	0	0	0	2.0E2	1.476	25232	7036	Sisma Y SLV	0	51.4	0	0	2.0E2	1.476
25233	7036	Sisma X SLD	50.5	0	0	0	2.0E2	1.476	25234	7036	Sisma Y SLD	0	50.5	0	0	2.0E2	1.476
25235	7037	Sisma X SLV	51.4	0	0	0	2.0E2	1.476	25236	7037	Sisma Y SLV	0	51.4	0	0	2.0E2	1.476
25237	7037	Sisma X SLD	50.6	0	0	0	2.0E2	1.476	25238	7037	Sisma Y SLD	0	50.6	0	0	2.0E2	1.476
25239	7038	Sisma X SLV	49.1	0	0	0	1.9E2	1.476	25240	7038	Sisma Y SLV	0	49.1	0	0	1.9E2	1.476
25241	7038	Sisma X SLD	48.3	0	0	0	1.9E2	1.476	25242	7038	Sisma Y SLD	0	48.3	0	0	1.9E2	1.476
25243	7039	Sisma X SLV	49.1	0	0	0	1.9E2	1.476	25244	7039	Sisma Y SLV	0	49.1	0	0	1.9E2	1.476
25245	7039	Sisma X SLD	48.3	0	0	0	1.9E2	1.476	25246	7039	Sisma Y SLD	0	48.3	0	0	1.9E2	1.476
25247	7040	Sisma X SLV	32.9	0	0	0	1.3E2	1.477	25248	7040	Sisma Y SLV	0	32.9	0	0	1.3E2	1.477
25249	7040	Sisma X SLD	32.4	0	0	0	1.3E2	1.477	25250	7040	Sisma Y SLD	0	32.4	0	0	1.3E2	1.477
25251	7041	Sisma X SLV	32.6	0	0	0	129.47	1.477	25252	7041	Sisma Y SLV	0	32.6	0	0	129.47	1.477
25253	7041	Sisma X SLD	32.1	0	0	0	129.47	1.477	25254	7041	Sisma Y SLD	0	32.1	0	0	129.47	1.477
25255	7042	Sisma X SLV	26.2	0	0	0	103.79	1.477	25256	7042	Sisma Y SLV	0	26.2	0	0	103.79	1.477
25257	7042	Sisma X SLD	25.8	0	0	0	103.79	1.477	25258	7042	Sisma Y SLD	0	25.8	0	0	103.79	1.477
25259	7043	Sisma X SLV	26.2	0	0	0	103.79	1.477	25260	7043	Sisma Y SLV	0	26.2	0	0	103.79	1.477
25261	7043	Sisma X SLD	25.8	0	0	0	103.79	1.477	25262	7043	Sisma Y SLD	0	25.8	0	0	103.79	1.477
25263	7044	Sisma X SLV	23.3	0	0	0	92.458	1.478	25264	7044	Sisma Y SLV	0	23.3	0	0	92.458	1.478
25265	7044	Sisma X SLD	22.9	0	0	0	92.458	1.478	25266	7044	Sisma Y SLD	0	22.9	0	0	92.458	1.478
25267	7045	Sisma X SLV	23.3	0	0	0	92.458	1.478	25268	7045	Sisma Y SLV	0	23.3	0	0	92.458	1.478
25269	7045	Sisma X SLD	22.9	0	0	0	92.458	1.478	25270	7045	Sisma Y SLD	0	22.9	0	0	92.458	1.478
25271	7046	Sisma X SLV	12.7	0	0	0	50.126	1.482	25272	7046	Sisma Y SLV	0	12.7	0	0	50.126	1.482
25273	7046	Sisma X SLD	12.5	0	0	0	50.126	1.482	25274	7046	Sisma Y SLD	0	12.5	0	0	50.126	1.482
25275	7047	Sisma X SLV	20.2	0	0	0	79.628	1.483	25276	7047	Sisma Y SLV	0	20.2	0	0	79.628	1.483
25277	7047	Sisma X SLD	19.8	0	0	0	79.628	1.483	25278	7047	Sisma Y SLD	0	19.8	0	0	79.628	1.483
25279	7048	Sisma X SLV	20.2	0	0	0	79.628	1.483	25280	7048	Sisma Y SLV	0	20.2	0	0	79.628	1.483
25281	7048	Sisma X SLD	19.8	0	0	0	79.628	1.483	25282	7048	Sisma Y SLD	0	19.8	0	0	79.628	1.483
25283	7049	Sisma X SLV	55.8	0	0	0	220.23	1.484	25284	7049	Sisma Y SLV	0	55.8	0	0	220.23	1.484
25285	7049	Sisma X SLD	54.9	0	0	0	220.23	1.484	25286	7049	Sisma Y SLD	0	54.9	0	0	220.23	1.484
25287	7050	Sisma X SLV	16.3	0	0	0	64.431	1.486	25288	7050	Sisma Y SLV	0	16.3	0	0	64.431	1.486
25289	7050	Sisma X SLD	16.1	0	0	0	64.431	1.486	25290	7050	Sisma Y SLD	0	16.1	0	0	64.431	1.486
25291	7051	Sisma X SLV	16.3	0	0	0	64.431	1.486	25292	7051	Sisma Y SLV	0	16.3	0	0	64.431	1.486
25293	7051	Sisma X SLD	16.1	0	0	0	64.431	1.486	25294	7051	Sisma Y SLD	0	16.1	0	0	64.431	1.486
25295	7052	Sisma X SLV	55.8	0	0	0	2.2E2	1.488	25296	7052	Sisma Y SLV	0	55.8	0	0	2.2E2	1.488
25297	7052	Sisma X SLD	54.9	0	0	0	2.2E2	1.488	25298	7052	Sisma Y SLD	0	54.9	0	0	2.2E2	1.488
25299	7053	Sisma X SLV	17.2	0	0	0	67.598	1.489	25300	7053	Sisma Y SLV	0	17.2	0	0	67.598	1.489
25301	7053	Sisma X SLD	16.9	0	0	0	67.598	1.489	25302	7053	Sisma Y SLD	0	16.9	0	0	67.598	1.489
25303	7054	Sisma X SLV	20.7	0	0	0	81.322	1.492	25304	7054	Sisma Y SLV	0	20.7	0	0	81.322	1.492
25305	7054	Sisma X SLD	20.4	0	0	0	81.322	1.492	25306	7054	Sisma Y SLD	0	20.4	0	0	81.322	1.492
25307	7055	Sisma X SLV	23	0	0	0	90.314	1.494	25308	7055	Sisma Y SLV	0	23	0	0	90.314	1.494
25309	7055	Sisma X SLD	22.7	0	0	0	90.314	1.494	25310	7055	Sisma Y SLD	0	22.7	0	0	90.314	1.494
25311	7056	Sisma X SLV	53.2	0	0	0	2.1E2	1.496	25312	7056	Sisma Y SLV	0	53.2	0	0	2.1E2	1.496
25313	7056	Sisma X SLD	52.3	0	0	0	2.1E2	1.496	25314	7056	Sisma Y SLD	0	52.3	0	0	2.1E2	1.496

Indice	Nodo	Condizione	Fx	Fy	Fz	Mz	Peso	Gamma	Indice	Nodo	Condizione	Fx	Fy	Fz	Mz	Peso	Gamma
25315	7057	Sisma X SLV	26.1	0	0	0	1.0E2	1.496	25316	7057	Sisma Y SLV	0	26.1	0	0	1.0E2	1.496
25317	7057	Sisma X SLD	25.7	0	0	0	1.0E2	1.496	25318	7057	Sisma Y SLD	0	25.7	0	0	1.0E2	1.496
25319	7058	Sisma X SLV	41.2	0	0	0	1.6E2	1.498	25320	7058	Sisma Y SLV	0	41.2	0	0	1.6E2	1.498
25321	7058	Sisma X SLD	40.6	0	0	0	1.6E2	1.498	25322	7058	Sisma Y SLD	0	40.6	0	0	1.6E2	1.498
25323	7059	Sisma X SLV	49.4	0	0	0	1.9E2	1.5	25324	7059	Sisma Y SLV	0	49.4	0	0	1.9E2	1.5
25325	7059	Sisma X SLD	48.7	0	0	0	1.9E2	1.5	25326	7059	Sisma Y SLD	0	48.7	0	0	1.9E2	1.5
25327	7060	Sisma X SLV	32.8	0	0	0	1.3E2	1.5	25328	7060	Sisma Y SLV	0	32.8	0	0	1.3E2	1.5
25329	7060	Sisma X SLD	32.3	0	0	0	1.3E2	1.5	25330	7060	Sisma Y SLD	0	32.3	0	0	1.3E2	1.5
25331	7061	Sisma X SLV	51.5	0	0	0	2.0E2	1.502	25332	7061	Sisma Y SLV	0	51.5	0	0	2.0E2	1.502
25333	7061	Sisma X SLD	50.7	0	0	0	2.0E2	1.502	25334	7061	Sisma Y SLD	0	50.7	0	0	2.0E2	1.502
25335	7062	Sisma X SLV	32.9	0	0	0	127.71	1.509	25336	7062	Sisma Y SLV	0	32.9	0	0	127.71	1.509
25337	7062	Sisma X SLD	32.4	0	0	0	127.71	1.509	25338	7062	Sisma Y SLD	0	32.4	0	0	127.71	1.509
25339	7063	Sisma X SLV	26.8	0	0	0	1.0E2	1.509	25340	7063	Sisma Y SLV	0	26.8	0	0	1.0E2	1.509
25341	7063	Sisma X SLD	26.4	0	0	0	1.0E2	1.509	25342	7063	Sisma Y SLD	0	26.4	0	0	1.0E2	1.509
25343	7064	Sisma X SLV	41.7	0	0	0	1.6E2	1.51	25344	7064	Sisma Y SLV	0	41.7	0	0	1.6E2	1.51
25345	7064	Sisma X SLD	41	0	0	0	1.6E2	1.51	25346	7064	Sisma Y SLD	0	41	0	0	1.6E2	1.51
25347	7065	Sisma X SLV	41.7	0	0	0	1.6E2	1.51	25348	7065	Sisma Y SLV	0	41.7	0	0	1.6E2	1.51
25349	7065	Sisma X SLD	41	0	0	0	1.6E2	1.51	25350	7065	Sisma Y SLD	0	41	0	0	1.6E2	1.51
25351	7066	Sisma X SLV	25.4	0	0	0	98.697	1.51	25352	7066	Sisma Y SLV	0	25.4	0	0	98.697	1.51
25353	7066	Sisma X SLD	25	0	0	0	98.697	1.51	25354	7066	Sisma Y SLD	0	25	0	0	98.697	1.51
25355	7067	Sisma X SLV	30.1	0	0	0	1.2E2	1.51	25356	7067	Sisma Y SLV	0	30.1	0	0	1.2E2	1.51
25357	7067	Sisma X SLD	29.6	0	0	0	1.2E2	1.51	25358	7067	Sisma Y SLD	0	29.6	0	0	1.2E2	1.51
25359	7068	Sisma X SLV	42.9	0	0	0	166.57	1.511	25360	7068	Sisma Y SLV	0	42.9	0	0	166.57	1.511
25361	7068	Sisma X SLD	42.3	0	0	0	166.57	1.511	25362	7068	Sisma Y SLD	0	42.3	0	0	166.57	1.511
25363	7069	Sisma X SLV	35.7	0	0	0	1.4E2	1.511	25364	7069	Sisma Y SLV	0	35.7	0	0	1.4E2	1.511
25365	7069	Sisma X SLD	35.1	0	0	0	1.4E2	1.511	25366	7069	Sisma Y SLD	0	35.1	0	0	1.4E2	1.511
25367	7070	Sisma X SLV	35.7	0	0	0	1.4E2	1.511	25368	7070	Sisma Y SLV	0	35.7	0	0	1.4E2	1.511
25369	7070	Sisma X SLD	35.1	0	0	0	1.4E2	1.511	25370	7070	Sisma Y SLD	0	35.1	0	0	1.4E2	1.511
25371	7071	Sisma X SLV	41.4	0	0	0	1.6E2	1.511	25372	7071	Sisma Y SLV	0	41.4	0	0	1.6E2	1.511
25373	7071	Sisma X SLD	40.8	0	0	0	1.6E2	1.511	25374	7071	Sisma Y SLD	0	40.8	0	0	1.6E2	1.511
25375	7072	Sisma X SLV	41.4	0	0	0	1.6E2	1.511	25376	7072	Sisma Y SLV	0	41.4	0	0	1.6E2	1.511
25377	7072	Sisma X SLD	40.8	0	0	0	1.6E2	1.511	25378	7072	Sisma Y SLD	0	40.8	0	0	1.6E2	1.511
25379	7073	Sisma X SLV	23.4	0	0	0	90.698	1.513	25380	7073	Sisma Y SLV	0	23.4	0	0	90.698	1.513
25381	7073	Sisma X SLD	23	0	0	0	90.698	1.513	25382	7073	Sisma Y SLD	0	23	0	0	90.698	1.513
25383	7074	Sisma X SLV	23.4	0	0	0	90.698	1.513	25384	7074	Sisma Y SLV	0	23.4	0	0	90.698	1.513
25385	7074	Sisma X SLD	23	0	0	0	90.698	1.513	25386	7074	Sisma Y SLD	0	23	0	0	90.698	1.513
25387	7075	Sisma X SLV	25.4	0	0	0	98.389	1.513	25388	7075	Sisma Y SLV	0	25.4	0	0	98.389	1.513
25389	7075	Sisma X SLD	25	0	0	0	98.389	1.513	25390	7075	Sisma Y SLD	0	25	0	0	98.389	1.513
25391	7076	Sisma X SLV	25.4	0	0	0	98.389	1.513	25392	7076	Sisma Y SLV	0	25.4	0	0	98.389	1.513
25393	7076	Sisma X SLD	25	0	0	0	98.389	1.513	25394	7076	Sisma Y SLD	0	25	0	0	98.389	1.513
25395	7077	Sisma X SLV	39.4	0	0	0	1.5E2	1.515	25396	7077	Sisma Y SLV	0	39.4	0	0	1.5E2	1.515
25397	7077	Sisma X SLD	38.8	0	0	0	1.5E2	1.515	25398	7077	Sisma Y SLD	0	38.8	0	0	1.5E2	1.515
25399	7078	Sisma X SLV	39.4	0	0	0	1.5E2	1.515	25400	7078	Sisma Y SLV	0	39.4	0	0	1.5E2	1.515
25401	7078	Sisma X SLD	38.8	0	0	0	1.5E2	1.515	25402	7078	Sisma Y SLD	0	38.8	0	0	1.5E2	1.515
25403	7079	Sisma X SLV	39.2	0	0	0	1.5E2	1.515	25404	7079	Sisma Y SLV	0	39.2	0	0	1.5E2	1.515
25405	7079	Sisma X SLD	38.6	0	0	0	1.5E2	1.515	25406	7079	Sisma Y SLD	0	38.6	0	0	1.5E2	1.515
25407	7080	Sisma X SLV	26.2	0	0	0	1.0E2	1.516	25408	7080	Sisma Y SLV	0	26.2	0	0	1.0E2	1.516
25409	7080	Sisma X SLD	25.8	0	0	0	1.0E2	1.516	25410	7080	Sisma Y SLD	0	25.8	0	0	1.0E2	1.516
25411	7081	Sisma X SLV	26.2	0	0	0	1.0E2	1.516	25412	7081	Sisma Y SLV	0	26.2	0	0	1.0E2	1.516
25413	7081	Sisma X SLD	25.8	0	0	0	1.0E2	1.516	25414	7081	Sisma Y SLD	0	25.8	0	0	1.0E2	1.516
25415	7082	Sisma X SLV	36.8	0	0	0	1.4E2	1.517	25416	7082	Sisma Y SLV	0	36.8	0	0	1.4E2	1.517
25417	7082	Sisma X SLD	36.2	0	0	0	1.4E2	1.517	25418	7082	Sisma Y SLD	0	36.2	0	0	1.4E2	1.517
25419	7083	Sisma X SLV	38.8	0	0	0	1.5E2	1.518	25420	7083	Sisma Y SLV	0	38.8	0	0	1.5E2	1.518
25421	7083	Sisma X SLD	38.1	0	0	0	1.5E2	1.518	25422	7083	Sisma Y SLD	0	38.1	0	0	1.5E2	1.518
25423	7084	Sisma X SLV	38.8	0	0	0	1.5E2	1.518	25424	7084	Sisma Y SLV	0	38.8	0	0	1.5E2	1.518
25425	7084	Sisma X SLD	38.1	0	0	0	1.5E2	1.518	25426	7084	Sisma Y SLD	0	38.1	0	0	1.5E2	1.518
25427	7085	Sisma X SLV	43.7	0	0	0	1.7E2	1.519	25428	7085	Sisma Y SLV	0	43.7	0	0	1.7E2	1.519
25429	7085	Sisma X SLD	43	0	0	0	1.7E2	1.519	25430	7085	Sisma Y SLD	0	43	0	0	1.7E2	1.519
25431	7086	Sisma X SLV	26.1	0	0	0	1.0E2	1.52	25432	7086	Sisma Y SLV	0	26.1	0	0	1.0E2	1.52
25433	7086	Sisma X SLD	25.7	0	0	0	1.0E2	1.52	25434	7086	Sisma Y SLD	0	25.7	0	0	1.0E2	1.52
25435	7087	Sisma X SLV	26.1	0	0	0	1.0E2	1.52	25436	7087	Sisma Y SLV	0	26.1	0	0	1.0E2	1.52
25437	7087	Sisma X SLD	25.7	0	0	0	1.0E2	1.52	25438	7087	Sisma Y SLD	0	25.7	0	0	1.0E2	1.52
25439	7088	Sisma X SLV	32.2	0	0	0	1.2E2	1.52	25440	7088	Sisma Y SLV	0	32.2	0	0	1.2E2	1.52
25441	7088	Sisma X SLD	31.7	0	0	0	1.2E2	1.52	25442	7088	Sisma Y SLD	0	31.7	0	0	1.2E2	1.52
25443	7089	Sisma X SLV	32.2	0	0	0	1.2E2	1.52	25444	7089	Sisma Y SLV	0	32.2	0	0	1.2E2	1.52
25445	7089	Sisma X SLD	31.7	0	0	0	1.2E2	1.52	25446	7089	Sisma Y SLD	0	31.7	0	0	1.2E2	1.52
25447	7090	Sisma X SLV	57.7	0	0	0	2.2E2	1.521	25448	7090	Sisma Y SLV	0	57.7	0	0	2.2E2	1.521
25449	7090	Sisma X SLD	56.8	0	0	0	2.2E2	1.521	25450	7090	Sisma Y SLD	0	56.8	0	0	2.2E2	1.521
25451	7091	Sisma X SLV	57.9	0	0	0	2.2E2	1.521	25452	7091	Sisma Y SLV	0	57.9	0	0	2.2E2	1.521
25453	7091	Sisma X SLD	56.9	0	0	0	2.2E2	1.521	25454	7091	Sisma Y SLD	0	56.9	0	0	2.2E2	1.521
25455	7092	Sisma X SLV	89	0	0	0	3.4E2	1.521	25456	7092	Sisma Y SLV	0	89	0	0	3.4E2	1.521
25457	7092	Sisma X SLD	87.6	0	0	0	3.4E2	1.521	25458	7092	Sisma Y SLD	0	87.6	0	0	3.4E2	1.521
25459	7093	Sisma X SLV	88.1	0	0	0	3.4E2	1.521	25460	7093	Sisma Y SLV	0	88.1	0	0	3.4E2	1.521
25461	7093	Sisma X SLD	86.7	0	0	0	3.4E2	1.521	25462	7093	Sisma Y SLD	0	86.7	0	0	3.4E2	1.521
25463	7094	Sisma X SLV	58.9	0	0	0	2.3E2	1.521	25464	7094	Sisma Y SLV	0	58.9	0	0	2.3E2	1.521
25465	7094	Sisma X SLD	58	0	0	0	2.3E2	1.521	25466	7094	Sisma Y SLD	0	58	0	0	2.3E2	1.521
25467	7095	Sisma X SLV	58.9	0	0	0	2.3E2	1.521	25468	7095	Sisma Y SLV	0	58.9	0	0	2.3E2	1.521
25469	7095	Sisma X SLD	58	0	0	0	2.3E2	1.521	25470	7095	Sisma Y SLD	0	58	0	0	2.3E2	1.521
25471	7096	Sisma X SLV	58.9	0	0	0	2.3E2	1.521	25472	7096	Sisma Y SLV	0	58.9	0	0	2.3E2	1.521
25473	7096	Sisma X SLD	58	0	0	0	2.3E2	1.521	25474	7096	Sisma Y SLD	0	58	0	0	2.3E2	1.521
25475	7097	Sisma X SLV	59.9	0	0	0	2.3E2	1.521	25476	7097	Sisma Y SLV	0	59.9	0	0	2.3E2	1.521
25477	7097	Sisma X SLD	58.9	0	0	0	2.3E2	1.521	25478	7097	Sisma Y SLD	0	58.9	0	0	2.3E2	1.521
25479	7098	Sisma X SLV	88.5	0	0	0	341.14	1.521	25480	7098	Sisma Y SLV	0	88.5	0	0	341.14	1.521
25481	7098	Sisma X SLD	87.1	0	0	0	341.14	1.521	25482	7098	Sisma Y SLD	0	87.1	0	0	341.14	1.521
25483	7099	Sisma X SLV	88.3	0	0	0	3.4E2	1.521	25484	7099	Sisma Y SLV	0	88.3	0	0	3.4E2	1.521
25485	7099	Sisma X SLD	86.9	0	0	0	3.4E2	1.521	25486	7099	Sisma Y SLD	0	86.9	0	0	3.4E2	1.521
25487	7100	Sisma X SLV	37.9	0	0	0	1.5E2	1.521	25488	7100	Sisma Y SLV	0	37.9	0	0	1.5E2	1.521
25489	7100	Sisma X SLD	37.3	0	0	0	1.5E2	1.521	25490	7100	Sisma Y SLD	0	37.3	0	0	1.5E2	1.521
25491	7101	Sisma X SLV	37.9	0	0	0	1.5E2	1.521	25492	7101	Sisma Y SLV	0	37.9	0	0	1.5E2	1.521
25493	7101	Sisma X SLD	37.3	0	0	0	1.5E2	1.521	25494	7101	Sisma Y SLD	0	37.3	0	0	1.5E2	1.521
25495	7102	Sisma X SLV	37.9	0	0	0	1.5E2	1.521	25496	7102	Sisma Y SLV	0	37.9	0	0	1.5E2	1.521
25497	7102	Sisma X SLD	37.3	0	0	0	1.5E2	1.521	25498	7102	Sisma Y SLD	0	37.3	0	0	1.5E2	1.521
25499	7103	Sisma X SLV	37.9	0	0	0	1.5E2	1.521	25500	7103	Sisma Y SLV	0	37.9	0	0	1.5E2	1.521
25501	7103	Sisma X SLD	37.3	0	0	0	1.5E2	1.521	25502	7103	Sisma Y SLD	0	37.3	0	0	1.5E2	1.521
25503	7104	Sisma X SLV	37.9	0	0	0	1.5E2	1.521	25504	7104	Sisma Y SLV	0	37.9	0	0	1.5E2	1.521
25505	7104	Sisma X SLD	37.3	0	0	0	1.5E2	1.521	25506	7104	Sisma Y SLD	0	37.3	0	0	1.5E2	1.521
25507	7105	Sisma X SLV	37.9	0	0	0	1.5E2	1.521	25508	7105	Sisma Y SLV	0	37.9	0	0	1.5E2	1.521
25509	7105	Sisma X SLD	37.3	0	0	0	1.5E2	1.521	25510	7105	Sisma Y SLD	0	37.3	0	0	1.5E2	1.521
25511	7106	Sisma X SLV	37.9	0	0	0	1.5E2	1.521	25512	7106	Sisma Y SLV	0	37.9	0	0	1.5E2	1.521
25513	7106	Sisma X SLD	37.3	0	0	0	1.5E2	1.521	25514	7106	Sisma Y SLD	0	37.3	0	0	1.5E2	1.521
25515	7107	Sisma X SLV	37.9	0	0	0	1.5E2	1.521	25516	7107	Sisma Y SLV	0	37.9	0	0	1.5E2	1.521

Indice	Nodo	Condizione	Fx	Fy	Fz	Mz	Peso	Gamma	Indice	Nodo	Condizione	Fx	Fy	Fz	Mz	Peso	Gamma
25517	7107	Sisma X SLD	37.3	0	0	0	1.5E2	1.521	25518	7107	Sisma Y SLD	0	37.3	0	0	1.5E2	1.521
25519	7108	Sisma X SLV	37.9	0	0	0	1.5E2	1.521	25520	7108	Sisma Y SLV	0	37.9	0	0	1.5E2	1.521
25521	7108	Sisma X SLD	37.3	0	0	0	1.5E2	1.521	25522	7108	Sisma Y SLD	0	37.3	0	0	1.5E2	1.521
25523	7109	Sisma X SLV	38	0	0	0	1.5E2	1.521	25524	7109	Sisma Y SLV	0	38	0	0	1.5E2	1.521
25525	7109	Sisma X SLD	37.4	0	0	0	1.5E2	1.521	25526	7109	Sisma Y SLD	0	37.4	0	0	1.5E2	1.521
25527	7110	Sisma X SLV	38.1	0	0	0	1.5E2	1.521	25528	7110	Sisma Y SLV	0	38.1	0	0	1.5E2	1.521
25529	7110	Sisma X SLD	37.5	0	0	0	1.5E2	1.521	25530	7110	Sisma Y SLD	0	37.5	0	0	1.5E2	1.521
25531	7111	Sisma X SLV	38.4	0	0	0	1.5E2	1.521	25532	7111	Sisma Y SLV	0	38.4	0	0	1.5E2	1.521
25533	7111	Sisma X SLD	37.7	0	0	0	1.5E2	1.521	25534	7111	Sisma Y SLD	0	37.7	0	0	1.5E2	1.521
25535	7112	Sisma X SLV	38.6	0	0	0	1.5E2	1.521	25536	7112	Sisma Y SLV	0	38.6	0	0	1.5E2	1.521
25537	7112	Sisma X SLD	38	0	0	0	1.5E2	1.521	25538	7112	Sisma Y SLD	0	38	0	0	1.5E2	1.521
25539	7113	Sisma X SLV	79.2	0	0	0	3.1E2	1.521	25540	7113	Sisma Y SLV	0	79.2	0	0	3.1E2	1.521
25541	7113	Sisma X SLD	78	0	0	0	3.1E2	1.521	25542	7113	Sisma Y SLD	0	78	0	0	3.1E2	1.521
25543	7114	Sisma X SLV	58.8	0	0	0	2.3E2	1.521	25544	7114	Sisma Y SLV	0	58.8	0	0	2.3E2	1.521
25545	7114	Sisma X SLD	57.8	0	0	0	2.3E2	1.521	25546	7114	Sisma Y SLD	0	57.8	0	0	2.3E2	1.521
25547	7115	Sisma X SLV	80.6	0	0	0	3.1E2	1.521	25548	7115	Sisma Y SLV	0	80.6	0	0	3.1E2	1.521
25549	7115	Sisma X SLD	79.3	0	0	0	3.1E2	1.521	25550	7115	Sisma Y SLD	0	79.3	0	0	3.1E2	1.521
25551	7116	Sisma X SLV	58.9	0	0	0	2.3E2	1.521	25552	7116	Sisma Y SLV	0	58.9	0	0	2.3E2	1.521
25553	7116	Sisma X SLD	58	0	0	0	2.3E2	1.521	25554	7116	Sisma Y SLD	0	58	0	0	2.3E2	1.521
25555	7117	Sisma X SLV	58.9	0	0	0	2.3E2	1.521	25556	7117	Sisma Y SLV	0	58.9	0	0	2.3E2	1.521
25557	7117	Sisma X SLD	58	0	0	0	2.3E2	1.521	25558	7117	Sisma Y SLD	0	58	0	0	2.3E2	1.521
25559	7118	Sisma X SLV	58.9	0	0	0	2.3E2	1.521	25560	7118	Sisma Y SLV	0	58.9	0	0	2.3E2	1.521
25561	7118	Sisma X SLD	58	0	0	0	2.3E2	1.521	25562	7118	Sisma Y SLD	0	58	0	0	2.3E2	1.521
25563	7119	Sisma X SLV	61.5	0	0	0	2.4E2	1.521	25564	7119	Sisma Y SLV	0	61.5	0	0	2.4E2	1.521
25565	7119	Sisma X SLD	60.6	0	0	0	2.4E2	1.521	25566	7119	Sisma Y SLD	0	60.6	0	0	2.4E2	1.521
25567	7120	Sisma X SLV	57.9	0	0	0	2.2E2	1.521	25568	7120	Sisma Y SLV	0	57.9	0	0	2.2E2	1.521
25569	7120	Sisma X SLD	57	0	0	0	2.2E2	1.521	25570	7120	Sisma Y SLD	0	57	0	0	2.2E2	1.521
25571	7121	Sisma X SLV	58.9	0	0	0	2.3E2	1.521	25572	7121	Sisma Y SLV	0	58.9	0	0	2.3E2	1.521
25573	7121	Sisma X SLD	58	0	0	0	2.3E2	1.521	25574	7121	Sisma Y SLD	0	58	0	0	2.3E2	1.521
25575	7122	Sisma X SLV	58.8	0	0	0	2.3E2	1.521	25576	7122	Sisma Y SLV	0	58.8	0	0	2.3E2	1.521
25577	7122	Sisma X SLD	57.9	0	0	0	2.3E2	1.521	25578	7122	Sisma Y SLD	0	57.9	0	0	2.3E2	1.521
25579	7123	Sisma X SLV	58.9	0	0	0	2.3E2	1.521	25580	7123	Sisma Y SLV	0	58.9	0	0	2.3E2	1.521
25581	7123	Sisma X SLD	58	0	0	0	2.3E2	1.521	25582	7123	Sisma Y SLD	0	58	0	0	2.3E2	1.521
25583	7124	Sisma X SLV	58	0	0	0	2.2E2	1.521	25584	7124	Sisma Y SLV	0	58	0	0	2.2E2	1.521
25585	7124	Sisma X SLD	57.1	0	0	0	2.2E2	1.521	25586	7124	Sisma Y SLD	0	57.1	0	0	2.2E2	1.521
25587	7125	Sisma X SLV	58.9	0	0	0	2.3E2	1.521	25588	7125	Sisma Y SLV	0	58.9	0	0	2.3E2	1.521
25589	7125	Sisma X SLD	58	0	0	0	2.3E2	1.521	25590	7125	Sisma Y SLD	0	58	0	0	2.3E2	1.521
25591	7126	Sisma X SLV	58.9	0	0	0	2.3E2	1.521	25592	7126	Sisma Y SLV	0	58.9	0	0	2.3E2	1.521
25593	7126	Sisma X SLD	58	0	0	0	2.3E2	1.521	25594	7126	Sisma Y SLD	0	58	0	0	2.3E2	1.521
25595	7127	Sisma X SLV	58.8	0	0	0	2.3E2	1.521	25596	7127	Sisma Y SLV	0	58.8	0	0	2.3E2	1.521
25597	7127	Sisma X SLD	57.9	0	0	0	2.3E2	1.521	25598	7127	Sisma Y SLD	0	57.9	0	0	2.3E2	1.521
25599	7128	Sisma X SLV	58.2	0	0	0	2.2E2	1.521	25600	7128	Sisma Y SLV	0	58.2	0	0	2.2E2	1.521
25601	7128	Sisma X SLD	57.3	0	0	0	2.2E2	1.521	25602	7128	Sisma Y SLD	0	57.3	0	0	2.2E2	1.521
25603	7129	Sisma X SLV	58.8	0	0	0	2.3E2	1.521	25604	7129	Sisma Y SLV	0	58.8	0	0	2.3E2	1.521
25605	7129	Sisma X SLD	57.9	0	0	0	2.3E2	1.521	25606	7129	Sisma Y SLD	0	57.9	0	0	2.3E2	1.521
25607	7130	Sisma X SLV	59.1	0	0	0	2.3E2	1.521	25608	7130	Sisma Y SLV	0	59.1	0	0	2.3E2	1.521
25609	7130	Sisma X SLD	58.1	0	0	0	2.3E2	1.521	25610	7130	Sisma Y SLD	0	58.1	0	0	2.3E2	1.521
25611	7131	Sisma X SLV	58.7	0	0	0	2.3E2	1.521	25612	7131	Sisma Y SLV	0	58.7	0	0	2.3E2	1.521
25613	7131	Sisma X SLD	57.7	0	0	0	2.3E2	1.521	25614	7131	Sisma Y SLD	0	57.7	0	0	2.3E2	1.521
25615	7132	Sisma X SLV	59.8	0	0	0	2.3E2	1.521	25616	7132	Sisma Y SLV	0	59.8	0	0	2.3E2	1.521
25617	7132	Sisma X SLD	58.9	0	0	0	2.3E2	1.521	25618	7132	Sisma Y SLD	0	58.9	0	0	2.3E2	1.521
25619	7133	Sisma X SLV	58.2	0	0	0	2.2E2	1.521	25620	7133	Sisma Y SLV	0	58.2	0	0	2.2E2	1.521
25621	7133	Sisma X SLD	57.3	0	0	0	2.2E2	1.521	25622	7133	Sisma Y SLD	0	57.3	0	0	2.2E2	1.521
25623	7134	Sisma X SLV	59.1	0	0	0	2.3E2	1.521	25624	7134	Sisma Y SLV	0	59.1	0	0	2.3E2	1.521
25625	7134	Sisma X SLD	58.2	0	0	0	2.3E2	1.521	25626	7134	Sisma Y SLD	0	58.2	0	0	2.3E2	1.521
25627	7135	Sisma X SLV	58.4	0	0	0	2.3E2	1.521	25628	7135	Sisma Y SLV	0	58.4	0	0	2.3E2	1.521
25629	7135	Sisma X SLD	57.5	0	0	0	2.3E2	1.521	25630	7135	Sisma Y SLD	0	57.5	0	0	2.3E2	1.521
25631	7136	Sisma X SLV	58.5	0	0	0	2.3E2	1.521	25632	7136	Sisma Y SLV	0	58.5	0	0	2.3E2	1.521
25633	7136	Sisma X SLD	57.6	0	0	0	2.3E2	1.521	25634	7136	Sisma Y SLD	0	57.6	0	0	2.3E2	1.521
25635	7137	Sisma X SLV	58.7	0	0	0	2.3E2	1.521	25636	7137	Sisma Y SLV	0	58.7	0	0	2.3E2	1.521
25637	7137	Sisma X SLD	57.8	0	0	0	2.3E2	1.521	25638	7137	Sisma Y SLD	0	57.8	0	0	2.3E2	1.521
25639	7138	Sisma X SLV	59.3	0	0	0	2.3E2	1.521	25640	7138	Sisma Y SLV	0	59.3	0	0	2.3E2	1.521
25641	7138	Sisma X SLD	58.3	0	0	0	2.3E2	1.521	25642	7138	Sisma Y SLD	0	58.3	0	0	2.3E2	1.521
25643	7139	Sisma X SLV	37.2	0	0	0	143.3	1.521	25644	7139	Sisma Y SLV	0	37.2	0	0	143.3	1.521
25645	7139	Sisma X SLD	36.6	0	0	0	143.3	1.521	25646	7139	Sisma Y SLD	0	36.6	0	0	143.3	1.521
25647	7140	Sisma X SLV	60.1	0	0	0	2.3E2	1.521	25648	7140	Sisma Y SLV	0	60.1	0	0	2.3E2	1.521
25649	7140	Sisma X SLD	59.2	0	0	0	2.3E2	1.521	25650	7140	Sisma Y SLD	0	59.2	0	0	2.3E2	1.521
25651	7141	Sisma X SLV	59.6	0	0	0	2.3E2	1.521	25652	7141	Sisma Y SLV	0	59.6	0	0	2.3E2	1.521
25653	7141	Sisma X SLD	58.6	0	0	0	2.3E2	1.521	25654	7141	Sisma Y SLD	0	58.6	0	0	2.3E2	1.521
25655	7142	Sisma X SLV	58.5	0	0	0	2.3E2	1.521	25656	7142	Sisma Y SLV	0	58.5	0	0	2.3E2	1.521
25657	7142	Sisma X SLD	57.5	0	0	0	2.3E2	1.521	25658	7142	Sisma Y SLD	0	57.5	0	0	2.3E2	1.521
25659	7143	Sisma X SLV	58.6	0	0	0	2.3E2	1.521	25660	7143	Sisma Y SLV	0	58.6	0	0	2.3E2	1.521
25661	7143	Sisma X SLD	57.6	0	0	0	2.3E2	1.521	25662	7143	Sisma Y SLD	0	57.6	0	0	2.3E2	1.521
25663	7144	Sisma X SLV	57.7	0	0	0	2.2E2	1.521	25664	7144	Sisma Y SLV	0	57.7	0	0	2.2E2	1.521
25665	7144	Sisma X SLD	56.7	0	0	0	2.2E2	1.521	25666	7144	Sisma Y SLD	0	56.7	0	0	2.2E2	1.521
25667	7145	Sisma X SLV	58.6	0	0	0	2.3E2	1.521	25668	7145	Sisma Y SLV	0	58.6	0	0	2.3E2	1.521
25669	7145	Sisma X SLD	57.7	0	0	0	2.3E2	1.521	25670	7145	Sisma Y SLD	0	57.7	0	0	2.3E2	1.521
25671	7146	Sisma X SLV	59.4	0	0	0	2.3E2	1.521	25672	7146	Sisma Y SLV	0	59.4	0	0	2.3E2	1.521
25673	7146	Sisma X SLD	58.5	0	0	0	2.3E2	1.521	25674	7146	Sisma Y SLD	0	58.5	0	0	2.3E2	1.521
25675	7147	Sisma X SLV	58.7	0	0	0	226.18	1.521	25676	7147	Sisma Y SLV	0	58.7	0	0	226.18	1.521
25677	7147	Sisma X SLD	57.8	0	0	0	226.18	1.521	25678	7147	Sisma Y SLD	0	57.8	0	0	226.18	1.521
25679	7148	Sisma X SLV	60.9	0	0	0	2.3E2	1.521	25680	7148	Sisma Y SLV	0	60.9	0	0	2.3E2	1.521
25681	7148	Sisma X SLD	59.9	0	0	0	2.3E2	1.521	25682	7148	Sisma Y SLD	0	59.9	0	0	2.3E2	1.521
25683	7149	Sisma X SLV	59	0	0	0	2.3E2	1.521	25684	7149	Sisma Y SLV	0	59	0	0	2.3E2	1.521
25685	7149	Sisma X SLD	58.1	0	0	0	2.3E2	1.521	25686	7149	Sisma Y SLD	0	58.1	0	0	2.3E2	1.521
25687	7150	Sisma X SLV	59.6	0	0	0	2.3E2	1.521	25688	7150	Sisma Y SLV	0	59.6	0	0	2.3E2	1.521
25689	7150	Sisma X SLD	58.6	0	0	0	2.3E2	1.521	25690	7150	Sisma Y SLD	0	58.6	0	0	2.3E2	1.521
25691	7151	Sisma X SLV	59.6	0	0	0	2.3E2	1.521	25692	7151	Sisma Y SLV	0	59.6	0	0	2.3E2	1.521
25693	7151	Sisma X SLD	58.7	0	0	0	2.3E2	1.521	25694	7151	Sisma Y SLD	0	58.7	0	0	2.3E2	1.521
25695	7152	Sisma X SLV	58.6	0	0	0	2.3E2	1.521	25696	7152	Sisma Y SLV	0	58.6	0	0	2.3E2	1.521
25697	7152	Sisma X SLD	57.7	0	0	0	2.3E2	1.521	25698	7152	Sisma Y SLD	0	57.7	0	0	2.3E2	1.521
25699	7153	Sisma X SLV	58.3	0	0	0	224.83	1.521	25700	7153	Sisma Y SLV	0	58.3	0	0	224.83	1.521
25701	7153	Sisma X SLD	57.4	0	0	0	224.83	1.521	25702	7153	Sisma Y SLD	0	57.4	0	0	224.83	1.521
25703	7154	Sisma X SLV	59.3	0	0	0	2.3E2	1.521	25704	7154	Sisma Y SLV	0	59.3	0	0	2.3E2	1.521
25705	7154	Sisma X SLD	58.3	0	0	0	2.3E2	1.521	25706	7154	Sisma Y SLD	0	58.3	0	0	2.3E2	1.521
25707	7155	Sisma X SLV	57.3	0	0	0	2.2E2	1.521	25708	7155	Sisma Y SLV	0	57.3	0	0	2.2E2	1.521
25709	7155	Sisma X SLD	56.4	0	0	0	2.2E2	1.521	25710	7155	Sisma Y SLD	0	56.4	0	0	2.2E2	1.521
25711	7156	Sisma X SLV	58.4	0	0	0	2.2E2	1.521	25712	7156	Sisma Y SLV	0	58.4	0	0	2.2E2	1.521
25713	7156	Sisma X SLD	57.5	0	0	0	2.2E2	1.521	25714	7156	Sisma Y SLD	0	57.5	0	0	2.2E2	1.521
25715	7157	Sisma X SLV	37.2	0	0	0	1.4E2	1.521	25716	7157	Sisma Y SLV	0	37.2	0	0	1.4E2	1.521
25717	7157	Sisma X SLD	36.6	0	0	0	1.4E2	1.521	25718	7157	Sisma Y SLD	0	36.6	0	0	1.4E2	1.521
25719	7158	Sisma X SLV	62.9	0	0	0	2.4E2	1.521	25720	7158	Sisma Y SLV	0	62.9	0	0	2.4E2	1.521
25721	7158	Sisma X SLD	61.9	0	0	0	2.4E2	1.521	25722	7158	Sisma Y SLD	0	61.9	0	0	2.4E2	1.521
25723	7159	Sisma X SLV	62.9	0	0	0	2.4E2	1.521	25724	7159	Sisma Y SLV	0	62.9	0	0	2.4E2	1.521

muratura

Indice	Nodo	Condizione	Fx	Fy	Fz	Mz	Peso	Gamma	Indice	Nodo	Condizione	Fx	Fy	Fz	Mz	Peso	Gamma
25725	7159	Sisma X SLD	61.9	0	0	0	2.4E2	1.521	25726	7159	Sisma Y SLD	0	61.9	0	0	2.4E2	1.521
25727	7160	Sisma X SLV	59.6	0	0	0	2.3E2	1.521	25728	7160	Sisma Y SLV	0	59.6	0	0	2.3E2	1.521
25729	7160	Sisma X SLD	58.6	0	0	0	2.3E2	1.521	25730	7160	Sisma Y SLD	0	58.6	0	0	2.3E2	1.521
25731	7161	Sisma X SLV	59.2	0	0	0	2.3E2	1.521	25732	7161	Sisma Y SLV	0	59.2	0	0	2.3E2	1.521
25733	7161	Sisma X SLD	58.2	0	0	0	2.3E2	1.521	25734	7161	Sisma Y SLD	0	58.2	0	0	2.3E2	1.521
25735	7162	Sisma X SLV	58.9	0	0	0	2.3E2	1.521	25736	7162	Sisma Y SLV	0	58.9	0	0	2.3E2	1.521
25737	7162	Sisma X SLD	57.9	0	0	0	2.3E2	1.521	25738	7162	Sisma Y SLD	0	57.9	0	0	2.3E2	1.521
25739	7163	Sisma X SLV	58.6	0	0	0	2.3E2	1.521	25740	7163	Sisma Y SLV	0	58.6	0	0	2.3E2	1.521
25741	7163	Sisma X SLD	57.6	0	0	0	2.3E2	1.521	25742	7163	Sisma Y SLD	0	57.6	0	0	2.3E2	1.521
25743	7164	Sisma X SLV	58.9	0	0	0	2.3E2	1.521	25744	7164	Sisma Y SLV	0	58.9	0	0	2.3E2	1.521
25745	7164	Sisma X SLD	58	0	0	0	2.3E2	1.521	25746	7164	Sisma Y SLD	0	58	0	0	2.3E2	1.521
25747	7165	Sisma X SLV	57.3	0	0	0	2.2E2	1.521	25748	7165	Sisma Y SLV	0	57.3	0	0	2.2E2	1.521
25749	7165	Sisma X SLD	56.4	0	0	0	2.2E2	1.521	25750	7165	Sisma Y SLD	0	56.4	0	0	2.2E2	1.521
25751	7166	Sisma X SLV	57.9	0	0	0	2.2E2	1.521	25752	7166	Sisma Y SLV	0	57.9	0	0	2.2E2	1.521
25753	7166	Sisma X SLD	56.9	0	0	0	2.2E2	1.521	25754	7166	Sisma Y SLD	0	56.9	0	0	2.2E2	1.521
25755	7167	Sisma X SLV	57.5	0	0	0	2.2E2	1.521	25756	7167	Sisma Y SLV	0	57.5	0	0	2.2E2	1.521
25757	7167	Sisma X SLD	56.6	0	0	0	2.2E2	1.521	25758	7167	Sisma Y SLD	0	56.6	0	0	2.2E2	1.521
25759	7168	Sisma X SLV	54.6	0	0	0	2.1E2	1.521	25760	7168	Sisma Y SLV	0	54.6	0	0	2.1E2	1.521
25761	7168	Sisma X SLD	53.8	0	0	0	2.1E2	1.521	25762	7168	Sisma Y SLD	0	53.8	0	0	2.1E2	1.521
25763	7169	Sisma X SLV	56.9	0	0	0	2.2E2	1.521	25764	7169	Sisma Y SLV	0	56.9	0	0	2.2E2	1.521
25765	7169	Sisma X SLD	56	0	0	0	2.2E2	1.521	25766	7169	Sisma Y SLD	0	56	0	0	2.2E2	1.521
25767	7170	Sisma X SLV	60.6	0	0	0	2.3E2	1.521	25768	7170	Sisma Y SLV	0	60.6	0	0	2.3E2	1.521
25769	7170	Sisma X SLD	59.6	0	0	0	2.3E2	1.521	25770	7170	Sisma Y SLD	0	59.6	0	0	2.3E2	1.521
25771	7171	Sisma X SLV	37.2	0	0	0	1.4E2	1.521	25772	7171	Sisma Y SLV	0	37.2	0	0	1.4E2	1.521
25773	7171	Sisma X SLD	36.6	0	0	0	1.4E2	1.521	25774	7171	Sisma Y SLD	0	36.6	0	0	1.4E2	1.521
25775	7172	Sisma X SLV	37.2	0	0	0	1.4E2	1.521	25776	7172	Sisma Y SLV	0	37.2	0	0	1.4E2	1.521
25777	7172	Sisma X SLD	36.6	0	0	0	1.4E2	1.521	25778	7172	Sisma Y SLD	0	36.6	0	0	1.4E2	1.521
25779	7173	Sisma X SLV	62.5	0	0	0	240.69	1.521	25780	7173	Sisma Y SLV	0	62.5	0	0	240.69	1.521
25781	7173	Sisma X SLD	61.5	0	0	0	240.69	1.521	25782	7173	Sisma Y SLD	0	61.5	0	0	240.69	1.521
25783	7174	Sisma X SLV	62.4	0	0	0	2.4E2	1.521	25784	7174	Sisma Y SLV	0	62.4	0	0	2.4E2	1.521
25785	7174	Sisma X SLD	61.4	0	0	0	2.4E2	1.521	25786	7174	Sisma Y SLD	0	61.4	0	0	2.4E2	1.521
25787	7175	Sisma X SLV	60.2	0	0	0	231.86	1.521	25788	7175	Sisma Y SLV	0	60.2	0	0	231.86	1.521
25789	7175	Sisma X SLD	59.2	0	0	0	231.86	1.521	25790	7175	Sisma Y SLD	0	59.2	0	0	231.86	1.521
25791	7176	Sisma X SLV	60.6	0	0	0	2.3E2	1.521	25792	7176	Sisma Y SLV	0	60.6	0	0	2.3E2	1.521
25793	7176	Sisma X SLD	59.7	0	0	0	2.3E2	1.521	25794	7176	Sisma Y SLD	0	59.7	0	0	2.3E2	1.521
25795	7177	Sisma X SLV	37.1	0	0	0	1.4E2	1.521	25796	7177	Sisma Y SLV	0	37.1	0	0	1.4E2	1.521
25797	7177	Sisma X SLD	36.6	0	0	0	1.4E2	1.521	25798	7177	Sisma Y SLD	0	36.6	0	0	1.4E2	1.521
25799	7178	Sisma X SLV	55.5	0	0	0	2.1E2	1.521	25800	7178	Sisma Y SLV	0	55.5	0	0	2.1E2	1.521
25801	7178	Sisma X SLD	54.6	0	0	0	2.1E2	1.521	25802	7178	Sisma Y SLD	0	54.6	0	0	2.1E2	1.521
25803	7179	Sisma X SLV	56.9	0	0	0	2.2E2	1.521	25804	7179	Sisma Y SLV	0	56.9	0	0	2.2E2	1.521
25805	7179	Sisma X SLD	56	0	0	0	2.2E2	1.521	25806	7179	Sisma Y SLD	0	56	0	0	2.2E2	1.521
25807	7180	Sisma X SLV	62.1	0	0	0	2.4E2	1.521	25808	7180	Sisma Y SLV	0	62.1	0	0	2.4E2	1.521
25809	7180	Sisma X SLD	61.1	0	0	0	2.4E2	1.521	25810	7180	Sisma Y SLD	0	61.1	0	0	2.4E2	1.521
25811	7181	Sisma X SLV	62	0	0	0	2.4E2	1.521	25812	7181	Sisma Y SLV	0	62	0	0	2.4E2	1.521
25813	7181	Sisma X SLD	61.1	0	0	0	2.4E2	1.521	25814	7181	Sisma Y SLD	0	61.1	0	0	2.4E2	1.521
25815	7182	Sisma X SLV	59.8	0	0	0	2.3E2	1.521	25816	7182	Sisma Y SLV	0	59.8	0	0	2.3E2	1.521
25817	7182	Sisma X SLD	58.9	0	0	0	2.3E2	1.521	25818	7182	Sisma Y SLD	0	58.9	0	0	2.3E2	1.521
25819	7183	Sisma X SLV	37.1	0	0	0	1.4E2	1.521	25820	7183	Sisma Y SLV	0	37.1	0	0	1.4E2	1.521
25821	7183	Sisma X SLD	36.5	0	0	0	1.4E2	1.521	25822	7183	Sisma Y SLD	0	36.5	0	0	1.4E2	1.521
25823	7184	Sisma X SLV	61.9	0	0	0	2.4E2	1.521	25824	7184	Sisma Y SLV	0	61.9	0	0	2.4E2	1.521
25825	7184	Sisma X SLD	60.9	0	0	0	2.4E2	1.521	25826	7184	Sisma Y SLD	0	60.9	0	0	2.4E2	1.521
25827	7185	Sisma X SLV	61.9	0	0	0	2.4E2	1.521	25828	7185	Sisma Y SLV	0	61.9	0	0	2.4E2	1.521
25829	7185	Sisma X SLD	60.9	0	0	0	2.4E2	1.521	25830	7185	Sisma Y SLD	0	60.9	0	0	2.4E2	1.521
25831	7186	Sisma X SLV	37.1	0	0	0	1.4E2	1.521	25832	7186	Sisma Y SLV	0	37.1	0	0	1.4E2	1.521
25833	7186	Sisma X SLD	36.5	0	0	0	1.4E2	1.521	25834	7186	Sisma Y SLD	0	36.5	0	0	1.4E2	1.521
25835	7187	Sisma X SLV	57.3	0	0	0	220.6	1.521	25836	7187	Sisma Y SLV	0	57.3	0	0	220.6	1.521
25837	7187	Sisma X SLD	56.4	0	0	0	220.6	1.521	25838	7187	Sisma Y SLD	0	56.4	0	0	220.6	1.521
25839	7188	Sisma X SLV	59.8	0	0	0	2.3E2	1.521	25840	7188	Sisma Y SLV	0	59.8	0	0	2.3E2	1.521
25841	7188	Sisma X SLD	58.8	0	0	0	2.3E2	1.521	25842	7188	Sisma Y SLD	0	58.8	0	0	2.3E2	1.521
25843	7189	Sisma X SLV	62	0	0	0	2.4E2	1.521	25844	7189	Sisma Y SLV	0	62	0	0	2.4E2	1.521
25845	7189	Sisma X SLD	61	0	0	0	2.4E2	1.521	25846	7189	Sisma Y SLD	0	61	0	0	2.4E2	1.521
25847	7190	Sisma X SLV	62.1	0	0	0	2.4E2	1.521	25848	7190	Sisma Y SLV	0	62.1	0	0	2.4E2	1.521
25849	7190	Sisma X SLD	61.1	0	0	0	2.4E2	1.521	25850	7190	Sisma Y SLD	0	61.1	0	0	2.4E2	1.521
25851	7191	Sisma X SLV	57.3	0	0	0	2.2E2	1.521	25852	7191	Sisma Y SLV	0	57.3	0	0	2.2E2	1.521
25853	7191	Sisma X SLD	56.3	0	0	0	2.2E2	1.521	25854	7191	Sisma Y SLD	0	56.3	0	0	2.2E2	1.521
25855	7192	Sisma X SLV	37.1	0	0	0	1.4E2	1.521	25856	7192	Sisma Y SLV	0	37.1	0	0	1.4E2	1.521
25857	7192	Sisma X SLD	36.5	0	0	0	1.4E2	1.521	25858	7192	Sisma Y SLD	0	36.5	0	0	1.4E2	1.521
25859	7193	Sisma X SLV	62.2	0	0	0	2.4E2	1.521	25860	7193	Sisma Y SLV	0	62.2	0	0	2.4E2	1.521
25861	7193	Sisma X SLD	61.2	0	0	0	2.4E2	1.521	25862	7193	Sisma Y SLD	0	61.2	0	0	2.4E2	1.521
25863	7194	Sisma X SLV	62.2	0	0	0	2.4E2	1.521	25864	7194	Sisma Y SLV	0	62.2	0	0	2.4E2	1.521
25865	7194	Sisma X SLD	61.2	0	0	0	2.4E2	1.521	25866	7194	Sisma Y SLD	0	61.2	0	0	2.4E2	1.521
25867	7195	Sisma X SLV	58.9	0	0	0	2.3E2	1.521	25868	7195	Sisma Y SLV	0	58.9	0	0	2.3E2	1.521
25869	7195	Sisma X SLD	58	0	0	0	2.3E2	1.521	25870	7195	Sisma Y SLD	0	58	0	0	2.3E2	1.521
25871	7196	Sisma X SLV	41.2	0	0	0	1.6E2	1.521	25872	7196	Sisma Y SLV	0	41.2	0	0	1.6E2	1.521
25873	7196	Sisma X SLD	40.5	0	0	0	1.6E2	1.521	25874	7196	Sisma Y SLD	0	40.5	0	0	1.6E2	1.521
25875	7197	Sisma X SLV	41.2	0	0	0	1.6E2	1.521	25876	7197	Sisma Y SLV	0	41.2	0	0	1.6E2	1.521
25877	7197	Sisma X SLD	40.5	0	0	0	1.6E2	1.521	25878	7197	Sisma Y SLD	0	40.5	0	0	1.6E2	1.521
25879	7198	Sisma X SLV	59	0	0	0	2.3E2	1.521	25880	7198	Sisma Y SLV	0	59	0	0	2.3E2	1.521
25881	7198	Sisma X SLD	58	0	0	0	2.3E2	1.521	25882	7198	Sisma Y SLD	0	58	0	0	2.3E2	1.521
25883	7199	Sisma X SLV	59.3	0	0	0	2.3E2	1.521	25884	7199	Sisma Y SLV	0	59.3	0	0	2.3E2	1.521
25885	7199	Sisma X SLD	58.4	0	0	0	2.3E2	1.521	25886	7199	Sisma Y SLD	0	58.4	0	0	2.3E2	1.521
25887	7200	Sisma X SLV	37.1	0	0	0	1.4E2	1.521	25888	7200	Sisma Y SLV	0	37.1	0	0	1.4E2	1.521
25889	7200	Sisma X SLD	36.5	0	0	0	1.4E2	1.521	25890	7200	Sisma Y SLD	0	36.5	0	0	1.4E2	1.521
25891	7201	Sisma X SLV	58.6	0	0	0	2.3E2	1.521	25892	7201	Sisma Y SLV	0	58.6	0	0	2.3E2	1.521
25893	7201	Sisma X SLD	57.7	0	0	0	2.3E2	1.521	25894	7201	Sisma Y SLD	0	57.7	0	0	2.3E2	1.521
25895	7202	Sisma X SLV	59.6	0	0	0	2.3E2	1.521	25896	7202	Sisma Y SLV	0	59.6	0	0	2.3E2	1.521
25897	7202	Sisma X SLD	58.6	0	0	0	2.3E2	1.521	25898	7202	Sisma Y SLD	0	58.6	0	0	2.3E2	1.521
25899	7203	Sisma X SLV	60.5	0	0	0	233.11	1.521	25900	7203	Sisma Y SLV	0	60.5	0	0	233.11	1.521
25901	7203	Sisma X SLD	59.6	0	0	0	233.11	1.521	25902	7203	Sisma Y SLD	0	59.6	0	0	233.11	1.521
25903	7204	Sisma X SLV	59.6	0	0	0	229.47	1.521	25904	7204	Sisma Y SLV	0	59.6	0	0	229.47	1.521
25905	7204	Sisma X SLD	58.6	0	0	0	229.47	1.521	25906	7204	Sisma Y SLD	0	58.6	0	0	229.47	1.521
25907	7205	Sisma X SLV	62.1	0	0	0	2.4E2	1.522	25908	7205	Sisma Y SLV	0	62.1	0	0	2.4E2	1.522
25909	7205	Sisma X SLD	61.1	0	0	0	2.4E2	1.522	25910	7205	Sisma Y SLD	0	61.1	0	0	2.4E2	1.522
25911	7206	Sisma X SLV	62.1	0	0	0	2.4E2	1.522	25912	7206	Sisma Y SLV	0	62.1	0	0	2.4E2	1.522
25913	7206	Sisma X SLD	61.1	0	0	0	2.4E2	1.522	25914	7206	Sisma Y SLD	0	61.1	0	0	2.4E2	1.522
25915	7207	Sisma X SLV	60.3	0	0	0	2.3E2	1.522	25916	7207	Sisma Y SLV	0	60.3	0	0	2.3E2	1.522
25917	7207	Sisma X SLD	59.4	0	0	0	2.3E2	1.522	25918	7207	Sisma Y SLD	0	59.4	0	0	2.3E2	1.522
25919	7208	Sisma X SLV	58.3	0	0	0	224.68	1.522	25920	7208	Sisma Y SLV	0	58.3	0	0	224.68	1.522
25921	7208	Sisma X SLD	57.4	0	0	0	224.68	1.522	25922	7208	Sisma Y SLD	0	57.4	0	0	224.68	1.522
25923	7209	Sisma X SLV	57.6	0	0	0	2.2E2	1.522	25924	7209	Sisma Y SLV	0	57.6	0	0	2.2E2	1.522
25925	7209	Sisma X SLD	56.7	0	0	0	2.2E2	1.522	25926	7209	Sisma Y SLD	0	56.7	0	0	2.2E2	1.522

Indice	Nodo	Condizione	Fx	Fy	Fz	Mz	Peso	Gamma	Indice	Nodo	Condizione	Fx	Fy	Fz	Mz	Peso	Gamma
25927	7210	Sisma X SLV	37.2	0	0	0	1.4E2	1.522	25928	7210	Sisma Y SLV	0	37.2	0	0	1.4E2	1.522
25929	7210	Sisma X SLD	36.6	0	0	0	1.4E2	1.522	25930	7210	Sisma Y SLD	0	36.6	0	0	1.4E2	1.522
25931	7211	Sisma X SLV	58.1	0	0	0	2.2E2	1.522	25932	7211	Sisma Y SLV	0	58.1	0	0	2.2E2	1.522
25933	7211	Sisma X SLD	57.2	0	0	0	2.2E2	1.522	25934	7211	Sisma Y SLD	0	57.2	0	0	2.2E2	1.522
25935	7212	Sisma X SLV	62	0	0	0	2.4E2	1.522	25936	7212	Sisma Y SLV	0	62	0	0	2.4E2	1.522
25937	7212	Sisma X SLD	61.1	0	0	0	2.4E2	1.522	25938	7212	Sisma Y SLD	0	61.1	0	0	2.4E2	1.522
25939	7213	Sisma X SLV	62	0	0	0	2.4E2	1.522	25940	7213	Sisma Y SLV	0	62	0	0	2.4E2	1.522
25941	7213	Sisma X SLD	61.1	0	0	0	2.4E2	1.522	25942	7213	Sisma Y SLD	0	61.1	0	0	2.4E2	1.522
25943	7214	Sisma X SLV	57.7	0	0	0	2.2E2	1.522	25944	7214	Sisma Y SLV	0	57.7	0	0	2.2E2	1.522
25945	7214	Sisma X SLD	56.8	0	0	0	2.2E2	1.522	25946	7214	Sisma Y SLD	0	56.8	0	0	2.2E2	1.522
25947	7215	Sisma X SLV	61.8	0	0	0	2.4E2	1.522	25948	7215	Sisma Y SLV	0	61.8	0	0	2.4E2	1.522
25949	7215	Sisma X SLD	60.8	0	0	0	2.4E2	1.522	25950	7215	Sisma Y SLD	0	60.8	0	0	2.4E2	1.522
25951	7216	Sisma X SLV	37.3	0	0	0	1.4E2	1.522	25952	7216	Sisma Y SLV	0	37.3	0	0	1.4E2	1.522
25953	7216	Sisma X SLD	36.7	0	0	0	1.4E2	1.522	25954	7216	Sisma Y SLD	0	36.7	0	0	1.4E2	1.522
25955	7217	Sisma X SLV	57.7	0	0	0	2.2E2	1.522	25956	7217	Sisma Y SLV	0	57.7	0	0	2.2E2	1.522
25957	7217	Sisma X SLD	56.7	0	0	0	2.2E2	1.522	25958	7217	Sisma Y SLD	0	56.7	0	0	2.2E2	1.522
25959	7218	Sisma X SLV	57.9	0	0	0	2.2E2	1.522	25960	7218	Sisma Y SLV	0	57.9	0	0	2.2E2	1.522
25961	7218	Sisma X SLD	57	0	0	0	2.2E2	1.522	25962	7218	Sisma Y SLD	0	57	0	0	2.2E2	1.522
25963	7219	Sisma X SLV	62	0	0	0	2.4E2	1.522	25964	7219	Sisma Y SLV	0	62	0	0	2.4E2	1.522
25965	7219	Sisma X SLD	61	0	0	0	2.4E2	1.522	25966	7219	Sisma Y SLD	0	61	0	0	2.4E2	1.522
25967	7220	Sisma X SLV	62	0	0	0	2.4E2	1.522	25968	7220	Sisma Y SLV	0	62	0	0	2.4E2	1.522
25969	7220	Sisma X SLD	61	0	0	0	2.4E2	1.522	25970	7220	Sisma Y SLD	0	61	0	0	2.4E2	1.522
25971	7221	Sisma X SLV	57.8	0	0	0	2.2E2	1.522	25972	7221	Sisma Y SLV	0	57.8	0	0	2.2E2	1.522
25973	7221	Sisma X SLD	56.9	0	0	0	2.2E2	1.522	25974	7221	Sisma Y SLD	0	56.9	0	0	2.2E2	1.522
25975	7222	Sisma X SLV	37.5	0	0	0	1.4E2	1.522	25976	7222	Sisma Y SLV	0	37.5	0	0	1.4E2	1.522
25977	7222	Sisma X SLD	36.9	0	0	0	1.4E2	1.522	25978	7222	Sisma Y SLD	0	36.9	0	0	1.4E2	1.522
25979	7223	Sisma X SLV	63.8	0	0	0	2.5E2	1.522	25980	7223	Sisma Y SLV	0	63.8	0	0	2.5E2	1.522
25981	7223	Sisma X SLD	62.8	0	0	0	2.5E2	1.522	25982	7223	Sisma Y SLD	0	62.8	0	0	2.5E2	1.522
25983	7224	Sisma X SLV	58.6	0	0	0	225.55	1.522	25984	7224	Sisma Y SLV	0	58.6	0	0	225.55	1.522
25985	7224	Sisma X SLD	57.6	0	0	0	225.55	1.522	25986	7224	Sisma Y SLD	0	57.6	0	0	225.55	1.522
25987	7225	Sisma X SLV	57.8	0	0	0	2.2E2	1.522	25988	7225	Sisma Y SLV	0	57.8	0	0	2.2E2	1.522
25989	7225	Sisma X SLD	56.9	0	0	0	2.2E2	1.522	25990	7225	Sisma Y SLD	0	56.9	0	0	2.2E2	1.522
25991	7226	Sisma X SLV	60.2	0	0	0	2.3E2	1.522	25992	7226	Sisma Y SLV	0	60.2	0	0	2.3E2	1.522
25993	7226	Sisma X SLD	59.3	0	0	0	2.3E2	1.522	25994	7226	Sisma Y SLD	0	59.3	0	0	2.3E2	1.522
25995	7227	Sisma X SLV	63.7	0	0	0	245.41	1.522	25996	7227	Sisma Y SLV	0	63.7	0	0	245.41	1.522
25997	7227	Sisma X SLD	62.7	0	0	0	245.41	1.522	25998	7227	Sisma Y SLD	0	62.7	0	0	245.41	1.522
25999	7228	Sisma X SLV	61.9	0	0	0	2.4E2	1.522	26000	7228	Sisma Y SLV	0	61.9	0	0	2.4E2	1.522
26001	7228	Sisma X SLD	60.9	0	0	0	2.4E2	1.522	26002	7228	Sisma Y SLD	0	60.9	0	0	2.4E2	1.522
26003	7229	Sisma X SLV	61.9	0	0	0	2.4E2	1.522	26004	7229	Sisma Y SLV	0	61.9	0	0	2.4E2	1.522
26005	7229	Sisma X SLD	60.9	0	0	0	2.4E2	1.522	26006	7229	Sisma Y SLD	0	60.9	0	0	2.4E2	1.522
26007	7230	Sisma X SLV	63.7	0	0	0	2.5E2	1.522	26008	7230	Sisma Y SLV	0	63.7	0	0	2.5E2	1.522
26009	7230	Sisma X SLD	62.7	0	0	0	2.5E2	1.522	26010	7230	Sisma Y SLD	0	62.7	0	0	2.5E2	1.522
26011	7231	Sisma X SLV	65.6	0	0	0	2.5E2	1.522	26012	7231	Sisma Y SLV	0	65.6	0	0	2.5E2	1.522
26013	7231	Sisma X SLD	64.6	0	0	0	2.5E2	1.522	26014	7231	Sisma Y SLD	0	64.6	0	0	2.5E2	1.522
26015	7232	Sisma X SLV	63.6	0	0	0	2.4E2	1.522	26016	7232	Sisma Y SLV	0	63.6	0	0	2.4E2	1.522
26017	7232	Sisma X SLD	62.6	0	0	0	2.4E2	1.522	26018	7232	Sisma Y SLD	0	62.6	0	0	2.4E2	1.522
26019	7233	Sisma X SLV	37.7	0	0	0	1.5E2	1.522	26020	7233	Sisma Y SLV	0	37.7	0	0	1.5E2	1.522
26021	7233	Sisma X SLD	37.1	0	0	0	1.5E2	1.522	26022	7233	Sisma Y SLD	0	37.1	0	0	1.5E2	1.522
26023	7234	Sisma X SLV	63.3	0	0	0	2.4E2	1.522	26024	7234	Sisma Y SLV	0	63.3	0	0	2.4E2	1.522
26025	7234	Sisma X SLD	62.3	0	0	0	2.4E2	1.522	26026	7234	Sisma Y SLD	0	62.3	0	0	2.4E2	1.522
26027	7235	Sisma X SLV	62	0	0	0	2.4E2	1.522	26028	7235	Sisma Y SLV	0	62	0	0	2.4E2	1.522
26029	7235	Sisma X SLD	61.1	0	0	0	2.4E2	1.522	26030	7235	Sisma Y SLD	0	61.1	0	0	2.4E2	1.522
26031	7236	Sisma X SLV	62.3	0	0	0	2.4E2	1.522	26032	7236	Sisma Y SLV	0	62.3	0	0	2.4E2	1.522
26033	7236	Sisma X SLD	61.3	0	0	0	2.4E2	1.522	26034	7236	Sisma Y SLD	0	61.3	0	0	2.4E2	1.522
26035	7237	Sisma X SLV	63.5	0	0	0	2.4E2	1.522	26036	7237	Sisma Y SLV	0	63.5	0	0	2.4E2	1.522
26037	7237	Sisma X SLD	62.4	0	0	0	2.4E2	1.522	26038	7237	Sisma Y SLD	0	62.4	0	0	2.4E2	1.522
26039	7238	Sisma X SLV	67.2	0	0	0	2.6E2	1.522	26040	7238	Sisma Y SLV	0	67.2	0	0	2.6E2	1.522
26041	7238	Sisma X SLD	66.1	0	0	0	2.6E2	1.522	26042	7238	Sisma Y SLD	0	66.1	0	0	2.6E2	1.522
26043	7239	Sisma X SLV	63.2	0	0	0	2.4E2	1.522	26044	7239	Sisma Y SLV	0	63.2	0	0	2.4E2	1.522
26045	7239	Sisma X SLD	62.2	0	0	0	2.4E2	1.522	26046	7239	Sisma Y SLD	0	62.2	0	0	2.4E2	1.522
26047	7240	Sisma X SLV	61.3	0	0	0	2.4E2	1.522	26048	7240	Sisma Y SLV	0	61.3	0	0	2.4E2	1.522
26049	7240	Sisma X SLD	60.3	0	0	0	2.4E2	1.522	26050	7240	Sisma Y SLD	0	60.3	0	0	2.4E2	1.522
26051	7241	Sisma X SLV	37.7	0	0	0	1.5E2	1.522	26052	7241	Sisma Y SLV	0	37.7	0	0	1.5E2	1.522
26053	7241	Sisma X SLD	37.1	0	0	0	1.5E2	1.522	26054	7241	Sisma Y SLD	0	37.1	0	0	1.5E2	1.522
26055	7242	Sisma X SLV	37.7	0	0	0	1.5E2	1.522	26056	7242	Sisma Y SLV	0	37.7	0	0	1.5E2	1.522
26057	7242	Sisma X SLD	37.1	0	0	0	1.5E2	1.522	26058	7242	Sisma Y SLD	0	37.1	0	0	1.5E2	1.522
26059	7243	Sisma X SLV	37.7	0	0	0	1.5E2	1.522	26060	7243	Sisma Y SLV	0	37.7	0	0	1.5E2	1.522
26061	7243	Sisma X SLD	37.1	0	0	0	1.5E2	1.522	26062	7243	Sisma Y SLD	0	37.1	0	0	1.5E2	1.522
26063	7244	Sisma X SLV	37.7	0	0	0	1.5E2	1.522	26064	7244	Sisma Y SLV	0	37.7	0	0	1.5E2	1.522
26065	7244	Sisma X SLD	37.1	0	0	0	1.5E2	1.522	26066	7244	Sisma Y SLD	0	37.1	0	0	1.5E2	1.522
26067	7245	Sisma X SLV	37.7	0	0	0	1.5E2	1.522	26068	7245	Sisma Y SLV	0	37.7	0	0	1.5E2	1.522
26069	7245	Sisma X SLD	37.1	0	0	0	1.5E2	1.522	26070	7245	Sisma Y SLD	0	37.1	0	0	1.5E2	1.522
26071	7246	Sisma X SLV	37.8	0	0	0	1.5E2	1.522	26072	7246	Sisma Y SLV	0	37.8	0	0	1.5E2	1.522
26073	7246	Sisma X SLD	37.2	0	0	0	1.5E2	1.522	26074	7246	Sisma Y SLD	0	37.2	0	0	1.5E2	1.522
26075	7247	Sisma X SLV	37.8	0	0	0	1.5E2	1.522	26076	7247	Sisma Y SLV	0	37.8	0	0	1.5E2	1.522
26077	7247	Sisma X SLD	37.2	0	0	0	1.5E2	1.522	26078	7247	Sisma Y SLD	0	37.2	0	0	1.5E2	1.522
26079	7248	Sisma X SLV	37.7	0	0	0	1.5E2	1.522	26080	7248	Sisma Y SLV	0	37.7	0	0	1.5E2	1.522
26081	7248	Sisma X SLD	37.1	0	0	0	1.5E2	1.522	26082	7248	Sisma Y SLD	0	37.1	0	0	1.5E2	1.522
26083	7249	Sisma X SLV	38	0	0	0	1.5E2	1.522	26084	7249	Sisma Y SLV	0	38	0	0	1.5E2	1.522
26085	7249	Sisma X SLD	37.4	0	0	0	1.5E2	1.522	26086	7249	Sisma Y SLD	0	37.4	0	0	1.5E2	1.522
26087	7250	Sisma X SLV	60.5	0	0	0	2.3E2	1.522	26088	7250	Sisma Y SLV	0	60.5	0	0	2.3E2	1.522
26089	7250	Sisma X SLD	59.6	0	0	0	2.3E2	1.522	26090	7250	Sisma Y SLD	0	59.6	0	0	2.3E2	1.522
26091	7251	Sisma X SLV	37.7	0	0	0	1.5E2	1.522	26092	7251	Sisma Y SLV	0	37.7	0	0	1.5E2	1.522
26093	7251	Sisma X SLD	37.1	0	0	0	1.5E2	1.522	26094	7251	Sisma Y SLD	0	37.1	0	0	1.5E2	1.522
26095	7252	Sisma X SLV	38.2	0	0	0	1.5E2	1.522	26096	7252	Sisma Y SLV	0	38.2	0	0	1.5E2	1.522
26097	7252	Sisma X SLD	37.6	0	0	0	1.5E2	1.522	26098	7252	Sisma Y SLD	0	37.6	0	0	1.5E2	1.522
26099	7253	Sisma X SLV	37.7	0	0	0	1.5E2	1.522	26100	7253	Sisma Y SLV	0	37.7	0	0	1.5E2	1.522
26101	7253	Sisma X SLD	37.1	0	0	0	1.5E2	1.522	26102	7253	Sisma Y SLD	0	37.1	0	0	1.5E2	1.522
26103	7254	Sisma X SLV	38.4	0	0	0	1.5E2	1.522	26104	7254	Sisma Y SLV	0	38.4	0	0	1.5E2	1.522
26105	7254	Sisma X SLD	37.8	0	0	0	1.5E2	1.522	26106	7254	Sisma Y SLD	0	37.8	0	0	1.5E2	1.522
26107	7255	Sisma X SLV	60.1	0	0	0	2.3E2	1.522	26108	7255	Sisma Y SLV	0	60.1	0	0	2.3E2	1.522
26109	7255	Sisma X SLD	59.2	0	0	0	2.3E2	1.522	26110	7255	Sisma Y SLD	0	59.2	0	0	2.3E2	1.522
26111	7256	Sisma X SLV	60	0	0	0	230.93	1.522	26112	7256	Sisma Y SLV	0	60	0	0	230.93	1.522
26113	7256	Sisma X SLD	59	0	0	0	230.93	1.522	26114	7256	Sisma Y SLD	0	59	0	0	230.93	1.522
26115	7257	Sisma X SLV	82.3	0	0	0	3.2E2	1.522	26116	7257	Sisma Y SLV	0	82.3	0	0	3.2E2	1.522
26117	7257	Sisma X SLD	81	0	0	0	3.2E2	1.522	26118	7257	Sisma Y SLD	0	81	0	0	3.2E2	1.522
26119	7258	Sisma X SLV	78.9	0	0	0	3.0E2	1.522	26120	7258	Sisma Y SLV	0	78.9	0	0	3.0E2	1.522
26121	7258	Sisma X SLD	77.6	0	0	0	3.0E2	1.522	26122	7258	Sisma Y SLD	0	77.6	0	0	3.0E2	1.522
26123	7259	Sisma X SLV	73.1	0	0	0	2.8E2	1.522	26124	7259	Sisma Y SLV	0	73.1	0	0	2.8E2	1.522
26125	7259	Sisma X SLD	71.9	0	0	0	2.8E2	1.522	26126	7259	Sisma Y SLD	0	71.9	0	0	2.8E2	1.522
26127	7260	Sisma X SLV	72.9	0	0	0	2.8E2	1.522	26128	7260	Sisma Y SLV	0	72.9	0	0	2.8E2	1.522
26129	7260	Sisma X SLD	71.7	0	0	0	2.8E2	1.522	26130	7260	Sisma Y SLD	0	71.7	0	0	2.8E2	1.522
26131	7261	Sisma X SLV	84.2	0	0	0	3.2E2	1.522	26132	7261	Sisma Y SLV	0	84.2	0	0	3.2E2	1.522
26133	7261	Sisma X SLD	82.8	0	0	0	3.2E2	1.522	26134	7261	Sisma Y SLD	0	82.8	0	0	3.2E2	1.522

Indice	Nodo	Condizione	Fx	Fy	Fz	Mz	Peso	Gamma	Indice	Nodo	Condizione	Fx	Fy	Fz	Mz	Peso	Gamma
26135	7262	Sisma X SLV	82.9	0	0	0	3.2E2	1.522	26136	7262	Sisma Y SLV	0	82.9	0	0	3.2E2	1.522
26137	7262	Sisma X SLD	81.6	0	0	0	3.2E2	1.522	26138	7262	Sisma Y SLD	0	81.6	0	0	3.2E2	1.522
26139	7263	Sisma X SLV	60.5	0	0	0	2.3E2	1.522	26140	7263	Sisma Y SLV	0	60.5	0	0	2.3E2	1.522
26141	7263	Sisma X SLD	59.5	0	0	0	2.3E2	1.522	26142	7263	Sisma Y SLD	0	59.5	0	0	2.3E2	1.522
26143	7264	Sisma X SLV	38.1	0	0	0	1.5E2	1.522	26144	7264	Sisma Y SLV	0	38.1	0	0	1.5E2	1.522
26145	7264	Sisma X SLD	37.5	0	0	0	1.5E2	1.522	26146	7264	Sisma Y SLD	0	37.5	0	0	1.5E2	1.522
26147	7265	Sisma X SLV	38.1	0	0	0	1.5E2	1.522	26148	7265	Sisma Y SLV	0	38.1	0	0	1.5E2	1.522
26149	7265	Sisma X SLD	37.5	0	0	0	1.5E2	1.522	26150	7265	Sisma Y SLD	0	37.5	0	0	1.5E2	1.522
26151	7266	Sisma X SLV	38.9	0	0	0	149.65	1.522	26152	7266	Sisma Y SLV	0	38.9	0	0	149.65	1.522
26153	7266	Sisma X SLD	38.3	0	0	0	149.65	1.522	26154	7266	Sisma Y SLD	0	38.3	0	0	149.65	1.522
26155	7267	Sisma X SLV	38	0	0	0	1.5E2	1.522	26156	7267	Sisma Y SLV	0	38	0	0	1.5E2	1.522
26157	7267	Sisma X SLD	37.4	0	0	0	1.5E2	1.522	26158	7267	Sisma Y SLD	0	37.4	0	0	1.5E2	1.522
26159	7268	Sisma X SLV	35.8	0	0	0	1.4E2	1.522	26160	7268	Sisma Y SLV	0	35.8	0	0	1.4E2	1.522
26161	7268	Sisma X SLD	35.2	0	0	0	1.4E2	1.522	26162	7268	Sisma Y SLD	0	35.2	0	0	1.4E2	1.522
26163	7269	Sisma X SLV	37.9	0	0	0	1.5E2	1.522	26164	7269	Sisma Y SLV	0	37.9	0	0	1.5E2	1.522
26165	7269	Sisma X SLD	37.3	0	0	0	1.5E2	1.522	26166	7269	Sisma Y SLD	0	37.3	0	0	1.5E2	1.522
26167	7270	Sisma X SLV	37.7	0	0	0	1.4E2	1.523	26168	7270	Sisma Y SLV	0	37.7	0	0	1.4E2	1.523
26169	7270	Sisma X SLD	37.1	0	0	0	1.4E2	1.523	26170	7270	Sisma Y SLD	0	37.1	0	0	1.4E2	1.523
26171	7271	Sisma X SLV	59.5	0	0	0	2.3E2	1.523	26172	7271	Sisma Y SLV	0	59.5	0	0	2.3E2	1.523
26173	7271	Sisma X SLD	58.6	0	0	0	2.3E2	1.523	26174	7271	Sisma Y SLD	0	58.6	0	0	2.3E2	1.523
26175	7272	Sisma X SLV	59.5	0	0	0	2.3E2	1.523	26176	7272	Sisma Y SLV	0	59.5	0	0	2.3E2	1.523
26177	7272	Sisma X SLD	58.6	0	0	0	2.3E2	1.523	26178	7272	Sisma Y SLD	0	58.6	0	0	2.3E2	1.523
26179	7273	Sisma X SLV	60.4	0	0	0	2.3E2	1.523	26180	7273	Sisma Y SLV	0	60.4	0	0	2.3E2	1.523
26181	7273	Sisma X SLD	59.4	0	0	0	2.3E2	1.523	26182	7273	Sisma Y SLD	0	59.4	0	0	2.3E2	1.523
26183	7274	Sisma X SLV	24.2	0	0	0	93.267	1.523	26184	7274	Sisma Y SLV	0	24.2	0	0	93.267	1.523
26185	7274	Sisma X SLD	23.8	0	0	0	93.267	1.523	26186	7274	Sisma Y SLD	0	23.8	0	0	93.267	1.523
26187	7275	Sisma X SLV	24.2	0	0	0	93.267	1.523	26188	7275	Sisma Y SLV	0	24.2	0	0	93.267	1.523
26189	7275	Sisma X SLD	23.8	0	0	0	93.267	1.523	26190	7275	Sisma Y SLD	0	23.8	0	0	93.267	1.523
26191	7276	Sisma X SLV	35.8	0	0	0	1.4E2	1.523	26192	7276	Sisma Y SLV	0	35.8	0	0	1.4E2	1.523
26193	7276	Sisma X SLD	35.2	0	0	0	1.4E2	1.523	26194	7276	Sisma Y SLD	0	35.2	0	0	1.4E2	1.523
26195	7277	Sisma X SLV	37.4	0	0	0	1.4E2	1.523	26196	7277	Sisma Y SLV	0	37.4	0	0	1.4E2	1.523
26197	7277	Sisma X SLD	36.8	0	0	0	1.4E2	1.523	26198	7277	Sisma Y SLD	0	36.8	0	0	1.4E2	1.523
26199	7278	Sisma X SLV	29.2	0	0	0	1.1E2	1.523	26200	7278	Sisma Y SLV	0	29.2	0	0	1.1E2	1.523
26201	7278	Sisma X SLD	28.7	0	0	0	1.1E2	1.523	26202	7278	Sisma Y SLD	0	28.7	0	0	1.1E2	1.523
26203	7279	Sisma X SLV	29.2	0	0	0	1.1E2	1.523	26204	7279	Sisma Y SLV	0	29.2	0	0	1.1E2	1.523
26205	7279	Sisma X SLD	28.7	0	0	0	1.1E2	1.523	26206	7279	Sisma Y SLD	0	28.7	0	0	1.1E2	1.523
26207	7280	Sisma X SLV	35.8	0	0	0	1.4E2	1.523	26208	7280	Sisma Y SLV	0	35.8	0	0	1.4E2	1.523
26209	7280	Sisma X SLD	35.3	0	0	0	1.4E2	1.523	26210	7280	Sisma Y SLD	0	35.3	0	0	1.4E2	1.523
26211	7281	Sisma X SLV	27.4	0	0	0	1.1E2	1.523	26212	7281	Sisma Y SLV	0	27.4	0	0	1.1E2	1.523
26213	7281	Sisma X SLD	26.9	0	0	0	1.1E2	1.523	26214	7281	Sisma Y SLD	0	26.9	0	0	1.1E2	1.523
26215	7282	Sisma X SLV	27.4	0	0	0	1.1E2	1.523	26216	7282	Sisma Y SLV	0	27.4	0	0	1.1E2	1.523
26217	7282	Sisma X SLD	26.9	0	0	0	1.1E2	1.523	26218	7282	Sisma Y SLD	0	26.9	0	0	1.1E2	1.523
26219	7283	Sisma X SLV	37	0	0	0	1.4E2	1.523	26220	7283	Sisma Y SLV	0	37	0	0	1.4E2	1.523
26221	7283	Sisma X SLD	36.5	0	0	0	1.4E2	1.523	26222	7283	Sisma Y SLD	0	36.5	0	0	1.4E2	1.523
26223	7284	Sisma X SLV	36	0	0	0	1.4E2	1.523	26224	7284	Sisma Y SLV	0	36	0	0	1.4E2	1.523
26225	7284	Sisma X SLD	35.4	0	0	0	1.4E2	1.523	26226	7284	Sisma Y SLD	0	35.4	0	0	1.4E2	1.523
26227	7285	Sisma X SLV	36.7	0	0	0	1.4E2	1.523	26228	7285	Sisma Y SLV	0	36.7	0	0	1.4E2	1.523
26229	7285	Sisma X SLD	36.1	0	0	0	1.4E2	1.523	26230	7285	Sisma Y SLD	0	36.1	0	0	1.4E2	1.523
26231	7286	Sisma X SLV	39.8	0	0	0	1.5E2	1.523	26232	7286	Sisma Y SLV	0	39.8	0	0	1.5E2	1.523
26233	7286	Sisma X SLD	39.2	0	0	0	1.5E2	1.523	26234	7286	Sisma Y SLD	0	39.2	0	0	1.5E2	1.523
26235	7287	Sisma X SLV	36.3	0	0	0	1.4E2	1.523	26236	7287	Sisma Y SLV	0	36.3	0	0	1.4E2	1.523
26237	7287	Sisma X SLD	35.7	0	0	0	1.4E2	1.523	26238	7287	Sisma Y SLD	0	35.7	0	0	1.4E2	1.523
26239	7288	Sisma X SLV	60.1	0	0	0	2.3E2	1.524	26240	7288	Sisma Y SLV	0	60.1	0	0	2.3E2	1.524
26241	7288	Sisma X SLD	59.2	0	0	0	2.3E2	1.524	26242	7288	Sisma Y SLD	0	59.2	0	0	2.3E2	1.524
26243	7289	Sisma X SLV	62	0	0	0	2.4E2	1.524	26244	7289	Sisma Y SLV	0	62	0	0	2.4E2	1.524
26245	7289	Sisma X SLD	61	0	0	0	2.4E2	1.524	26246	7289	Sisma Y SLD	0	61	0	0	2.4E2	1.524
26247	7290	Sisma X SLV	62	0	0	0	2.4E2	1.524	26248	7290	Sisma Y SLV	0	62	0	0	2.4E2	1.524
26249	7290	Sisma X SLD	61	0	0	0	2.4E2	1.524	26250	7290	Sisma Y SLD	0	61	0	0	2.4E2	1.524
26251	7291	Sisma X SLV	38.5	0	0	0	1.5E2	1.524	26252	7291	Sisma Y SLV	0	38.5	0	0	1.5E2	1.524
26253	7291	Sisma X SLD	37.9	0	0	0	1.5E2	1.524	26254	7291	Sisma Y SLD	0	37.9	0	0	1.5E2	1.524
26255	7292	Sisma X SLV	26.1	0	0	0	1.0E2	1.524	26256	7292	Sisma Y SLV	0	26.1	0	0	1.0E2	1.524
26257	7292	Sisma X SLD	25.7	0	0	0	1.0E2	1.524	26258	7292	Sisma Y SLD	0	25.7	0	0	1.0E2	1.524
26259	7293	Sisma X SLV	26.1	0	0	0	1.0E2	1.524	26260	7293	Sisma Y SLV	0	26.1	0	0	1.0E2	1.524
26261	7293	Sisma X SLD	25.7	0	0	0	1.0E2	1.524	26262	7293	Sisma Y SLD	0	25.7	0	0	1.0E2	1.524
26263	7294	Sisma X SLV	29.3	0	0	0	1.1E2	1.524	26264	7294	Sisma Y SLV	0	29.3	0	0	1.1E2	1.524
26265	7294	Sisma X SLD	28.9	0	0	0	1.1E2	1.524	26266	7294	Sisma Y SLD	0	28.9	0	0	1.1E2	1.524
26267	7295	Sisma X SLV	29.3	0	0	0	1.1E2	1.524	26268	7295	Sisma Y SLV	0	29.3	0	0	1.1E2	1.524
26269	7295	Sisma X SLD	28.9	0	0	0	1.1E2	1.524	26270	7295	Sisma Y SLD	0	28.9	0	0	1.1E2	1.524
26271	7296	Sisma X SLV	58.8	0	0	0	225.94	1.525	26272	7296	Sisma Y SLV	0	58.8	0	0	225.94	1.525
26273	7296	Sisma X SLD	57.9	0	0	0	225.94	1.525	26274	7296	Sisma Y SLD	0	57.9	0	0	225.94	1.525
26275	7297	Sisma X SLV	58.8	0	0	0	225.94	1.525	26276	7297	Sisma Y SLV	0	58.8	0	0	225.94	1.525
26277	7297	Sisma X SLD	57.9	0	0	0	225.94	1.525	26278	7297	Sisma Y SLD	0	57.9	0	0	225.94	1.525
26279	7298	Sisma X SLV	55.4	0	0	0	2.1E2	1.525	26280	7298	Sisma Y SLV	0	55.4	0	0	2.1E2	1.525
26281	7298	Sisma X SLD	54.6	0	0	0	2.1E2	1.525	26282	7298	Sisma Y SLD	0	54.6	0	0	2.1E2	1.525
26283	7299	Sisma X SLV	55.4	0	0	0	2.1E2	1.525	26284	7299	Sisma Y SLV	0	55.4	0	0	2.1E2	1.525
26285	7299	Sisma X SLD	54.6	0	0	0	2.1E2	1.525	26286	7299	Sisma Y SLD	0	54.6	0	0	2.1E2	1.525
26287	7300	Sisma X SLV	59.5	0	0	0	2.3E2	1.525	26288	7300	Sisma Y SLV	0	59.5	0	0	2.3E2	1.525
26289	7300	Sisma X SLD	58.6	0	0	0	2.3E2	1.525	26290	7300	Sisma Y SLD	0	58.6	0	0	2.3E2	1.525
26291	7301	Sisma X SLV	61.9	0	0	0	2.4E2	1.526	26292	7301	Sisma Y SLV	0	61.9	0	0	2.4E2	1.526
26293	7301	Sisma X SLD	60.9	0	0	0	2.4E2	1.526	26294	7301	Sisma Y SLD	0	60.9	0	0	2.4E2	1.526
26295	7302	Sisma X SLV	59.8	0	0	0	2.3E2	1.526	26296	7302	Sisma Y SLV	0	59.8	0	0	2.3E2	1.526
26297	7302	Sisma X SLD	58.9	0	0	0	2.3E2	1.526	26298	7302	Sisma Y SLD	0	58.9	0	0	2.3E2	1.526
26299	7303	Sisma X SLV	61.2	0	0	0	2.4E2	1.526	26300	7303	Sisma Y SLV	0	61.2	0	0	2.4E2	1.526
26301	7303	Sisma X SLD	60.2	0	0	0	2.4E2	1.526	26302	7303	Sisma Y SLD	0	60.2	0	0	2.4E2	1.526
26303	7304	Sisma X SLV	38	0	0	0	1.5E2	1.526	26304	7304	Sisma Y SLV	0	38	0	0	1.5E2	1.526
26305	7304	Sisma X SLD	37.4	0	0	0	1.5E2	1.526	26306	7304	Sisma Y SLD	0	37.4	0	0	1.5E2	1.526
26307	7305	Sisma X SLV	24.3	0	0	0	93.375	1.526	26308	7305	Sisma Y SLV	0	24.3	0	0	93.375	1.526
26309	7305	Sisma X SLD	23.9	0	0	0	93.375	1.526	26310	7305	Sisma Y SLD	0	23.9	0	0	93.375	1.526
26311	7306	Sisma X SLV	61.2	0	0	0	2.4E2	1.526	26312	7306	Sisma Y SLV	0	61.2	0	0	2.4E2	1.526
26313	7306	Sisma X SLD	60.2	0	0	0	2.4E2	1.526	26314	7306	Sisma Y SLD	0	60.2	0	0	2.4E2	1.526
26315	7307	Sisma X SLV	39.1	0	0	0	1.5E2	1.526	26316	7307	Sisma Y SLV	0	39.1	0	0	1.5E2	1.526
26317	7307	Sisma X SLD	38.5	0	0	0	1.5E2	1.526	26318	7307	Sisma Y SLD	0	38.5	0	0	1.5E2	1.526
26319	7308	Sisma X SLV	59.6	0	0	0	2.3E2	1.527	26320	7308	Sisma Y SLV	0	59.6	0	0	2.3E2	1.527
26321	7308	Sisma X SLD	58.7	0	0	0	2.3E2	1.527	26322	7308	Sisma Y SLD	0	58.7	0	0	2.3E2	1.527
26323	7309	Sisma X SLV	57.9	0	0	0	2.2E2	1.527	26324	7309	Sisma Y SLV	0	57.9	0	0	2.2E2	1.527
26325	7309	Sisma X SLD	57	0	0	0	2.2E2	1.527	26326	7309	Sisma Y SLD	0	57	0	0	2.2E2	1.527
26327	7310	Sisma X SLV	57.9	0	0	0	2.2E2	1.527	26328	7310	Sisma Y SLV	0	57.9	0	0	2.2E2	1.527
26329	7310	Sisma X SLD	57	0	0	0	2.2E2	1.527	26330	7310	Sisma Y SLD	0	57	0	0	2.2E2	1.527
26331	7311	Sisma X SLV	58.7	0	0	0	2.3E2	1.527	26332	7311	Sisma Y SLV	0	58.7	0	0	2.3E2	1.527
26333	7311	Sisma X SLD	57.7	0	0	0	2.3E2	1.527	26334	7311	Sisma Y SLD	0	57.7	0	0	2.3E2	1.527
26335	7312	Sisma X SLV	60.3	0	0	0	231.26	1.528	26336	7312	Sisma Y SLV	0	60.3	0	0	231.26	1.528

Indice	Nodo	Condizione	Fx	Fy	Fz	Mz	Peso	Gamma	Indice	Nodo	Condizione	Fx	Fy	Fz	Mz	Peso	Gamma
26337	7312	Sisma X SLD	59.3	0	0	0	231.26	1.528	26338	7312	Sisma Y SLD	0	59.3	0	0	231.26	1.528
26339	7313	Sisma X SLV	37.5	0	0	0	1.4E2	1.528	26340	7313	Sisma Y SLV	0	37.5	0	0	1.4E2	1.528
26341	7313	Sisma X SLD	36.9	0	0	0	1.4E2	1.528	26342	7313	Sisma Y SLD	0	36.9	0	0	1.4E2	1.528
26343	7314	Sisma X SLV	60.3	0	0	0	2.3E2	1.528	26344	7314	Sisma Y SLV	0	60.3	0	0	2.3E2	1.528
26345	7314	Sisma X SLD	59.3	0	0	0	2.3E2	1.528	26346	7314	Sisma Y SLD	0	59.3	0	0	2.3E2	1.528
26347	7315	Sisma X SLV	38.3	0	0	0	1.5E2	1.529	26348	7315	Sisma Y SLV	0	38.3	0	0	1.5E2	1.529
26349	7315	Sisma X SLD	37.7	0	0	0	1.5E2	1.529	26350	7315	Sisma Y SLD	0	37.7	0	0	1.5E2	1.529
26351	7316	Sisma X SLV	54.1	0	0	0	207.5	1.529	26352	7316	Sisma Y SLV	0	54.1	0	0	207.5	1.529
26353	7316	Sisma X SLD	53.3	0	0	0	207.5	1.529	26354	7316	Sisma Y SLD	0	53.3	0	0	207.5	1.529
26355	7317	Sisma X SLV	54.1	0	0	0	207.5	1.529	26356	7317	Sisma Y SLV	0	54.1	0	0	207.5	1.529
26357	7317	Sisma X SLD	53.3	0	0	0	207.5	1.529	26358	7317	Sisma Y SLD	0	53.3	0	0	207.5	1.529
26359	7318	Sisma X SLV	56.9	0	0	0	2.2E2	1.529	26360	7318	Sisma Y SLV	0	56.9	0	0	2.2E2	1.529
26361	7318	Sisma X SLD	56	0	0	0	2.2E2	1.529	26362	7318	Sisma Y SLD	0	56	0	0	2.2E2	1.529
26363	7319	Sisma X SLV	56.9	0	0	0	2.2E2	1.529	26364	7319	Sisma Y SLV	0	56.9	0	0	2.2E2	1.529
26365	7319	Sisma X SLD	56	0	0	0	2.2E2	1.529	26366	7319	Sisma Y SLD	0	56	0	0	2.2E2	1.529
26367	7320	Sisma X SLV	57.7	0	0	0	2.2E2	1.53	26368	7320	Sisma Y SLV	0	57.7	0	0	2.2E2	1.53
26369	7320	Sisma X SLD	56.8	0	0	0	2.2E2	1.53	26370	7320	Sisma Y SLD	0	56.8	0	0	2.2E2	1.53
26371	7321	Sisma X SLV	59.4	0	0	0	2.3E2	1.53	26372	7321	Sisma Y SLV	0	59.4	0	0	2.3E2	1.53
26373	7321	Sisma X SLD	58.5	0	0	0	2.3E2	1.53	26374	7321	Sisma Y SLD	0	58.5	0	0	2.3E2	1.53
26375	7322	Sisma X SLV	57.8	0	0	0	2.2E2	1.53	26376	7322	Sisma Y SLV	0	57.8	0	0	2.2E2	1.53
26377	7322	Sisma X SLD	56.9	0	0	0	2.2E2	1.53	26378	7322	Sisma Y SLD	0	56.9	0	0	2.2E2	1.53
26379	7323	Sisma X SLV	59.2	0	0	0	2.3E2	1.53	26380	7323	Sisma Y SLV	0	59.2	0	0	2.3E2	1.53
26381	7323	Sisma X SLD	58.3	0	0	0	2.3E2	1.53	26382	7323	Sisma Y SLD	0	58.3	0	0	2.3E2	1.53
26383	7324	Sisma X SLV	36.9	0	0	0	1.4E2	1.53	26384	7324	Sisma Y SLV	0	36.9	0	0	1.4E2	1.53
26385	7324	Sisma X SLD	36.3	0	0	0	1.4E2	1.53	26386	7324	Sisma Y SLD	0	36.3	0	0	1.4E2	1.53
26387	7325	Sisma X SLV	59.2	0	0	0	2.3E2	1.53	26388	7325	Sisma Y SLV	0	59.2	0	0	2.3E2	1.53
26389	7325	Sisma X SLD	58.3	0	0	0	2.3E2	1.53	26390	7325	Sisma Y SLD	0	58.3	0	0	2.3E2	1.53
26391	7326	Sisma X SLV	57.7	0	0	0	2.2E2	1.531	26392	7326	Sisma Y SLV	0	57.7	0	0	2.2E2	1.531
26393	7326	Sisma X SLD	56.8	0	0	0	2.2E2	1.531	26394	7326	Sisma Y SLD	0	56.8	0	0	2.2E2	1.531
26395	7327	Sisma X SLV	37.4	0	0	0	1.4E2	1.531	26396	7327	Sisma Y SLV	0	37.4	0	0	1.4E2	1.531
26397	7327	Sisma X SLD	36.8	0	0	0	1.4E2	1.531	26398	7327	Sisma Y SLD	0	36.8	0	0	1.4E2	1.531
26399	7328	Sisma X SLV	55.7	0	0	0	2.1E2	1.532	26400	7328	Sisma Y SLV	0	55.7	0	0	2.1E2	1.532
26401	7328	Sisma X SLD	54.8	0	0	0	2.1E2	1.532	26402	7328	Sisma Y SLD	0	54.8	0	0	2.1E2	1.532
26403	7329	Sisma X SLV	55.7	0	0	0	2.1E2	1.532	26404	7329	Sisma Y SLV	0	55.7	0	0	2.1E2	1.532
26405	7329	Sisma X SLD	54.8	0	0	0	2.1E2	1.532	26406	7329	Sisma Y SLD	0	54.8	0	0	2.1E2	1.532
26407	7330	Sisma X SLV	56.8	0	0	0	2.2E2	1.532	26408	7330	Sisma Y SLV	0	56.8	0	0	2.2E2	1.532
26409	7330	Sisma X SLD	55.9	0	0	0	2.2E2	1.532	26410	7330	Sisma Y SLD	0	55.9	0	0	2.2E2	1.532
26411	7331	Sisma X SLV	53.3	0	0	0	2.0E2	1.532	26412	7331	Sisma Y SLV	0	53.3	0	0	2.0E2	1.532
26413	7331	Sisma X SLD	52.5	0	0	0	2.0E2	1.532	26414	7331	Sisma Y SLD	0	52.5	0	0	2.0E2	1.532
26415	7332	Sisma X SLV	53.3	0	0	0	2.0E2	1.532	26416	7332	Sisma Y SLV	0	53.3	0	0	2.0E2	1.532
26417	7332	Sisma X SLD	52.5	0	0	0	2.0E2	1.532	26418	7332	Sisma Y SLD	0	52.5	0	0	2.0E2	1.532
26419	7333	Sisma X SLV	58	0	0	0	2.2E2	1.532	26420	7333	Sisma Y SLV	0	58	0	0	2.2E2	1.532
26421	7333	Sisma X SLD	57.1	0	0	0	2.2E2	1.532	26422	7333	Sisma Y SLD	0	57.1	0	0	2.2E2	1.532
26423	7334	Sisma X SLV	36.3	0	0	0	1.4E2	1.532	26424	7334	Sisma Y SLV	0	36.3	0	0	1.4E2	1.532
26425	7334	Sisma X SLD	35.7	0	0	0	1.4E2	1.532	26426	7334	Sisma Y SLD	0	35.7	0	0	1.4E2	1.532
26427	7335	Sisma X SLV	58	0	0	0	2.2E2	1.532	26428	7335	Sisma Y SLV	0	58	0	0	2.2E2	1.532
26429	7335	Sisma X SLD	57.1	0	0	0	2.2E2	1.532	26430	7335	Sisma Y SLD	0	57.1	0	0	2.2E2	1.532
26431	7336	Sisma X SLV	57.5	0	0	0	219.92	1.532	26432	7336	Sisma Y SLV	0	57.5	0	0	219.92	1.532
26433	7336	Sisma X SLD	56.6	0	0	0	219.92	1.532	26434	7336	Sisma Y SLD	0	56.6	0	0	219.92	1.532
26435	7337	Sisma X SLV	56.7	0	0	0	2.2E2	1.533	26436	7337	Sisma Y SLV	0	56.7	0	0	2.2E2	1.533
26437	7337	Sisma X SLD	55.8	0	0	0	2.2E2	1.533	26438	7337	Sisma Y SLD	0	55.8	0	0	2.2E2	1.533
26439	7338	Sisma X SLV	24.2	0	0	0	92.306	1.533	26440	7338	Sisma Y SLV	0	24.2	0	0	92.306	1.533
26441	7338	Sisma X SLD	23.8	0	0	0	92.306	1.533	26442	7338	Sisma Y SLD	0	23.8	0	0	92.306	1.533
26443	7339	Sisma X SLV	56.3	0	0	0	2.2E2	1.533	26444	7339	Sisma Y SLV	0	56.3	0	0	2.2E2	1.533
26445	7339	Sisma X SLD	55.4	0	0	0	2.2E2	1.533	26446	7339	Sisma Y SLD	0	55.4	0	0	2.2E2	1.533
26447	7340	Sisma X SLV	56.6	0	0	0	2.2E2	1.533	26448	7340	Sisma Y SLV	0	56.6	0	0	2.2E2	1.533
26449	7340	Sisma X SLD	55.7	0	0	0	2.2E2	1.533	26450	7340	Sisma Y SLD	0	55.7	0	0	2.2E2	1.533
26451	7341	Sisma X SLV	56.9	0	0	0	2.2E2	1.533	26452	7341	Sisma Y SLV	0	56.9	0	0	2.2E2	1.533
26453	7341	Sisma X SLD	56	0	0	0	2.2E2	1.533	26454	7341	Sisma Y SLD	0	56	0	0	2.2E2	1.533
26455	7342	Sisma X SLV	54.5	0	0	0	2.1E2	1.533	26456	7342	Sisma Y SLV	0	54.5	0	0	2.1E2	1.533
26457	7342	Sisma X SLD	53.6	0	0	0	2.1E2	1.533	26458	7342	Sisma Y SLD	0	53.6	0	0	2.1E2	1.533
26459	7343	Sisma X SLV	54.5	0	0	0	2.1E2	1.533	26460	7343	Sisma Y SLV	0	54.5	0	0	2.1E2	1.533
26461	7343	Sisma X SLD	53.6	0	0	0	2.1E2	1.533	26462	7343	Sisma Y SLD	0	53.6	0	0	2.1E2	1.533
26463	7344	Sisma X SLV	36.5	0	0	0	1.4E2	1.533	26464	7344	Sisma Y SLV	0	36.5	0	0	1.4E2	1.533
26465	7344	Sisma X SLD	36	0	0	0	1.4E2	1.533	26466	7344	Sisma Y SLD	0	36	0	0	1.4E2	1.533
26467	7345	Sisma X SLV	56.5	0	0	0	2.2E2	1.534	26468	7345	Sisma Y SLV	0	56.5	0	0	2.2E2	1.534
26469	7345	Sisma X SLD	55.6	0	0	0	2.2E2	1.534	26470	7345	Sisma Y SLD	0	55.6	0	0	2.2E2	1.534
26471	7346	Sisma X SLV	53.1	0	0	0	2.0E2	1.534	26472	7346	Sisma Y SLV	0	53.1	0	0	2.0E2	1.534
26473	7346	Sisma X SLD	52.3	0	0	0	2.0E2	1.534	26474	7346	Sisma Y SLD	0	52.3	0	0	2.0E2	1.534
26475	7347	Sisma X SLV	53.1	0	0	0	2.0E2	1.534	26476	7347	Sisma Y SLV	0	53.1	0	0	2.0E2	1.534
26477	7347	Sisma X SLD	52.3	0	0	0	2.0E2	1.534	26478	7347	Sisma Y SLD	0	52.3	0	0	2.0E2	1.534
26479	7348	Sisma X SLV	56.4	0	0	0	2.2E2	1.534	26480	7348	Sisma Y SLV	0	56.4	0	0	2.2E2	1.534
26481	7348	Sisma X SLD	55.5	0	0	0	2.2E2	1.534	26482	7348	Sisma Y SLD	0	55.5	0	0	2.2E2	1.534
26483	7349	Sisma X SLV	56.9	0	0	0	2.2E2	1.534	26484	7349	Sisma Y SLV	0	56.9	0	0	2.2E2	1.534
26485	7349	Sisma X SLD	56	0	0	0	2.2E2	1.534	26486	7349	Sisma Y SLD	0	56	0	0	2.2E2	1.534
26487	7350	Sisma X SLV	35.8	0	0	0	1.4E2	1.534	26488	7350	Sisma Y SLV	0	35.8	0	0	1.4E2	1.534
26489	7350	Sisma X SLD	35.3	0	0	0	1.4E2	1.534	26490	7350	Sisma Y SLD	0	35.3	0	0	1.4E2	1.534
26491	7351	Sisma X SLV	53.6	0	0	0	2.0E2	1.534	26492	7351	Sisma Y SLV	0	53.6	0	0	2.0E2	1.534
26493	7351	Sisma X SLD	52.7	0	0	0	2.0E2	1.534	26494	7351	Sisma Y SLD	0	52.7	0	0	2.0E2	1.534
26495	7352	Sisma X SLV	53.6	0	0	0	2.0E2	1.534	26496	7352	Sisma Y SLV	0	53.6	0	0	2.0E2	1.534
26497	7352	Sisma X SLD	52.7	0	0	0	2.0E2	1.534	26498	7352	Sisma Y SLD	0	52.7	0	0	2.0E2	1.534
26499	7353	Sisma X SLV	56.4	0	0	0	2.2E2	1.534	26500	7353	Sisma Y SLV	0	56.4	0	0	2.2E2	1.534
26501	7353	Sisma X SLD	55.5	0	0	0	2.2E2	1.534	26502	7353	Sisma Y SLD	0	55.5	0	0	2.2E2	1.534
26503	7354	Sisma X SLV	35.9	0	0	0	1.4E2	1.535	26504	7354	Sisma Y SLV	0	35.9	0	0	1.4E2	1.535
26505	7354	Sisma X SLD	35.4	0	0	0	1.4E2	1.535	26506	7354	Sisma Y SLD	0	35.4	0	0	1.4E2	1.535
26507	7355	Sisma X SLV	35.7	0	0	0	1.4E2	1.535	26508	7355	Sisma Y SLV	0	35.7	0	0	1.4E2	1.535
26509	7355	Sisma X SLD	35.1	0	0	0	1.4E2	1.535	26510	7355	Sisma Y SLD	0	35.1	0	0	1.4E2	1.535
26511	7356	Sisma X SLV	24	0	0	0	91.367	1.537	26512	7356	Sisma Y SLV	0	24	0	0	91.367	1.537
26513	7356	Sisma X SLD	23.6	0	0	0	91.367	1.537	26514	7356	Sisma Y SLD	0	23.6	0	0	91.367	1.537
26515	7357	Sisma X SLV	25.5	0	0	0	97.124	1.541	26516	7357	Sisma Y SLV	0	25.5	0	0	97.124	1.541
26517	7357	Sisma X SLD	25.1	0	0	0	97.124	1.541	26518	7357	Sisma Y SLD	0	25.1	0	0	97.124	1.541
26519	7358	Sisma X SLV	17.8	0	0	0	67.307	1.548	26520	7358	Sisma Y SLV	0	17.8	0	0	67.307	1.548
26521	7358	Sisma X SLD	17.5	0	0	0	67.307	1.548	26522	7358	Sisma Y SLD	0	17.5	0	0	67.307	1.548
26523	7359	Sisma X SLV	16.9	0	0	0	63.92	1.549	26524	7359	Sisma Y SLV	0	16.9	0	0	63.92	1.549
26525	7359	Sisma X SLD	16.6	0	0	0	63.92	1.549	26526	7359	Sisma Y SLD	0	16.6	0	0	63.92	1.549
26527	7360	Sisma X SLV	16.9	0	0	0	63.92	1.549	26528	7360	Sisma Y SLV	0	16.9	0	0	63.92	1.549
26529	7360	Sisma X SLD	16.6	0	0	0	63.92	1.549	26530	7360	Sisma Y SLD	0	16.6	0	0	63.92	1.549
26531	7361	Sisma X SLV	40.5	0	0	0	1.5E2	1.553	26532	7361	Sisma Y SLV	0	40.5	0	0	1.5E2	1.553
26533	7361	Sisma X SLD	39.9	0	0	0	1.5E2	1.553	26534	7361	Sisma Y SLD	0	39.9	0	0	1.5E2	1.553
26535	7362	Sisma X SLV	24.6	0	0	0	92.605	1.554	26536	7362	Sisma Y SLV	0	24.6	0	0	92.605	1.554
26537	7362	Sisma X SLD	24.2	0	0	0	92.605	1.554	26538	7362	Sisma Y SLD	0	24.2	0	0	92.605	1.554
26539	7363	Sisma X SLV	60.3	0	0	0	2.3E2	1.555	26540	7363	Sisma Y SLV	0	60.3	0	0	2.3E2	1.555
26541	7363	Sisma X SLD	59.4	0	0	0	2.3E2	1.555	26542	7363	Sisma Y SLD	0	59.4	0	0	2.3E2	1.555
26543	7364	Sisma X SLV	23.1	0	0	0	86.964	1.555	26544	7364	Sisma Y SLV	0	23.1	0	0	86.964	1.555

muratura

Indice	Nodo	Condizione	Fx	Fy	Fz	Mz	Peso	Gamma	Indice	Nodo	Condizione	Fx	Fy	Fz	Mz	Peso	Gamma
26545	7364	Sisma X SLD	22.7	0	0	0	86.964	1.555	26546	7364	Sisma Y SLD	0	22.7	0	0	86.964	1.555
26547	7365	Sisma X SLV	23.1	0	0	0	86.964	1.555	26548	7365	Sisma Y SLV	0	23.1	0	0	86.964	1.555
26549	7365	Sisma X SLD	22.7	0	0	0	86.964	1.555	26550	7365	Sisma Y SLD	0	22.7	0	0	86.964	1.555
26551	7366	Sisma X SLV	51.9	0	0	0	2.0E2	1.558	26552	7366	Sisma Y SLV	0	51.9	0	0	2.0E2	1.558
26553	7366	Sisma X SLD	51.1	0	0	0	2.0E2	1.558	26554	7366	Sisma Y SLD	0	51.1	0	0	2.0E2	1.558
26555	7367	Sisma X SLV	30.4	0	0	0	1.1E2	1.559	26556	7367	Sisma Y SLV	0	30.4	0	0	1.1E2	1.559
26557	7367	Sisma X SLD	29.9	0	0	0	1.1E2	1.559	26558	7367	Sisma Y SLD	0	29.9	0	0	1.1E2	1.559
26559	7368	Sisma X SLV	58.5	0	0	0	2.2E2	1.559	26560	7368	Sisma Y SLV	0	58.5	0	0	2.2E2	1.559
26561	7368	Sisma X SLD	57.5	0	0	0	2.2E2	1.559	26562	7368	Sisma Y SLD	0	57.5	0	0	2.2E2	1.559
26563	7369	Sisma X SLV	59.3	0	0	0	2.2E2	1.561	26564	7369	Sisma Y SLV	0	59.3	0	0	2.2E2	1.561
26565	7369	Sisma X SLD	58.4	0	0	0	2.2E2	1.561	26566	7369	Sisma Y SLD	0	58.4	0	0	2.2E2	1.561
26567	7370	Sisma X SLV	26.6	0	0	0	99.981	1.561	26568	7370	Sisma Y SLV	0	26.6	0	0	99.981	1.561
26569	7370	Sisma X SLD	26.2	0	0	0	99.981	1.561	26570	7370	Sisma Y SLD	0	26.2	0	0	99.981	1.561
26571	7371	Sisma X SLV	26.6	0	0	0	99.981	1.561	26572	7371	Sisma Y SLV	0	26.6	0	0	99.981	1.561
26573	7371	Sisma X SLD	26.2	0	0	0	99.981	1.561	26574	7371	Sisma Y SLD	0	26.2	0	0	99.981	1.561
26575	7372	Sisma X SLV	31.4	0	0	0	1.2E2	1.562	26576	7372	Sisma Y SLV	0	31.4	0	0	1.2E2	1.562
26577	7372	Sisma X SLD	30.9	0	0	0	1.2E2	1.562	26578	7372	Sisma Y SLD	0	30.9	0	0	1.2E2	1.562
26579	7373	Sisma X SLV	30.3	0	0	0	1.1E2	1.563	26580	7373	Sisma Y SLV	0	30.3	0	0	1.1E2	1.563
26581	7373	Sisma X SLD	29.9	0	0	0	1.1E2	1.563	26582	7373	Sisma Y SLD	0	29.9	0	0	1.1E2	1.563
26583	7374	Sisma X SLV	30.3	0	0	0	1.1E2	1.563	26584	7374	Sisma Y SLV	0	30.3	0	0	1.1E2	1.563
26585	7374	Sisma X SLD	29.9	0	0	0	1.1E2	1.563	26586	7374	Sisma Y SLD	0	29.9	0	0	1.1E2	1.563
26587	7375	Sisma X SLV	57.6	0	0	0	2.2E2	1.563	26588	7375	Sisma Y SLV	0	57.6	0	0	2.2E2	1.563
26589	7375	Sisma X SLD	56.6	0	0	0	2.2E2	1.563	26590	7375	Sisma Y SLD	0	56.6	0	0	2.2E2	1.563
26591	7376	Sisma X SLV	53.8	0	0	0	2.0E2	1.564	26592	7376	Sisma Y SLV	0	53.8	0	0	2.0E2	1.564
26593	7376	Sisma X SLD	53	0	0	0	2.0E2	1.564	26594	7376	Sisma Y SLD	0	53	0	0	2.0E2	1.564
26595	7377	Sisma X SLV	27.5	0	0	0	1.0E2	1.565	26596	7377	Sisma Y SLV	0	27.5	0	0	1.0E2	1.565
26597	7377	Sisma X SLD	27.1	0	0	0	1.0E2	1.565	26598	7377	Sisma Y SLD	0	27.1	0	0	1.0E2	1.565
26599	7378	Sisma X SLV	27.5	0	0	0	1.0E2	1.565	26600	7378	Sisma Y SLV	0	27.5	0	0	1.0E2	1.565
26601	7378	Sisma X SLD	27.1	0	0	0	1.0E2	1.565	26602	7378	Sisma Y SLD	0	27.1	0	0	1.0E2	1.565
26603	7379	Sisma X SLV	25.6	0	0	0	95.993	1.565	26604	7379	Sisma Y SLV	0	25.6	0	0	95.993	1.565
26605	7379	Sisma X SLD	25.2	0	0	0	95.993	1.565	26606	7379	Sisma Y SLD	0	25.2	0	0	95.993	1.565
26607	7380	Sisma X SLV	25.6	0	0	0	95.993	1.565	26608	7380	Sisma Y SLV	0	25.6	0	0	95.993	1.565
26609	7380	Sisma X SLD	25.2	0	0	0	95.993	1.565	26610	7380	Sisma Y SLD	0	25.2	0	0	95.993	1.565
26611	7381	Sisma X SLV	35.7	0	0	0	1.3E2	1.566	26612	7381	Sisma Y SLV	0	35.7	0	0	1.3E2	1.566
26613	7381	Sisma X SLD	35.1	0	0	0	1.3E2	1.566	26614	7381	Sisma Y SLD	0	35.1	0	0	1.3E2	1.566
26615	7382	Sisma X SLV	35.7	0	0	0	1.3E2	1.566	26616	7382	Sisma Y SLV	0	35.7	0	0	1.3E2	1.566
26617	7382	Sisma X SLD	35.1	0	0	0	1.3E2	1.566	26618	7382	Sisma Y SLD	0	35.1	0	0	1.3E2	1.566
26619	7383	Sisma X SLV	26.3	0	0	0	98.243	1.568	26620	7383	Sisma Y SLV	0	26.3	0	0	98.243	1.568
26621	7383	Sisma X SLD	25.9	0	0	0	98.243	1.568	26622	7383	Sisma Y SLD	0	25.9	0	0	98.243	1.568
26623	7384	Sisma X SLV	26.3	0	0	0	98.243	1.568	26624	7384	Sisma Y SLV	0	26.3	0	0	98.243	1.568
26625	7384	Sisma X SLD	25.9	0	0	0	98.243	1.568	26626	7384	Sisma Y SLD	0	25.9	0	0	98.243	1.568
26627	7385	Sisma X SLV	40.3	0	0	0	1.5E2	1.569	26628	7385	Sisma Y SLV	0	40.3	0	0	1.5E2	1.569
26629	7385	Sisma X SLD	39.6	0	0	0	1.5E2	1.569	26630	7385	Sisma Y SLD	0	39.6	0	0	1.5E2	1.569
26631	7386	Sisma X SLV	40.3	0	0	0	1.5E2	1.569	26632	7386	Sisma Y SLV	0	40.3	0	0	1.5E2	1.569
26633	7386	Sisma X SLD	39.6	0	0	0	1.5E2	1.569	26634	7386	Sisma Y SLD	0	39.6	0	0	1.5E2	1.569
26635	7387	Sisma X SLV	47.7	0	0	0	1.8E2	1.569	26636	7387	Sisma Y SLV	0	47.7	0	0	1.8E2	1.569
26637	7387	Sisma X SLD	47	0	0	0	1.8E2	1.569	26638	7387	Sisma Y SLD	0	47	0	0	1.8E2	1.569
26639	7388	Sisma X SLV	30.2	0	0	0	1.1E2	1.57	26640	7388	Sisma Y SLV	0	30.2	0	0	1.1E2	1.57
26641	7388	Sisma X SLD	29.7	0	0	0	1.1E2	1.57	26642	7388	Sisma Y SLD	0	29.7	0	0	1.1E2	1.57
26643	7389	Sisma X SLV	30.2	0	0	0	1.1E2	1.57	26644	7389	Sisma Y SLV	0	30.2	0	0	1.1E2	1.57
26645	7389	Sisma X SLD	29.7	0	0	0	1.1E2	1.57	26646	7389	Sisma Y SLD	0	29.7	0	0	1.1E2	1.57
26647	7390	Sisma X SLV	28.2	0	0	0	1.1E2	1.57	26648	7390	Sisma Y SLV	0	28.2	0	0	1.1E2	1.57
26649	7390	Sisma X SLD	27.7	0	0	0	1.1E2	1.57	26650	7390	Sisma Y SLD	0	27.7	0	0	1.1E2	1.57
26651	7391	Sisma X SLV	31.6	0	0	0	1.2E2	1.571	26652	7391	Sisma Y SLV	0	31.6	0	0	1.2E2	1.571
26653	7391	Sisma X SLD	31.1	0	0	0	1.2E2	1.571	26654	7391	Sisma Y SLD	0	31.1	0	0	1.2E2	1.571
26655	7392	Sisma X SLV	31.6	0	0	0	1.2E2	1.571	26656	7392	Sisma Y SLV	0	31.6	0	0	1.2E2	1.571
26657	7392	Sisma X SLD	31.1	0	0	0	1.2E2	1.571	26658	7392	Sisma Y SLD	0	31.1	0	0	1.2E2	1.571
26659	7393	Sisma X SLV	33.5	0	0	0	1.2E2	1.572	26660	7393	Sisma Y SLV	0	33.5	0	0	1.2E2	1.572
26661	7393	Sisma X SLD	32.9	0	0	0	1.2E2	1.572	26662	7393	Sisma Y SLD	0	32.9	0	0	1.2E2	1.572
26663	7394	Sisma X SLV	33.5	0	0	0	1.2E2	1.572	26664	7394	Sisma Y SLV	0	33.5	0	0	1.2E2	1.572
26665	7394	Sisma X SLD	32.9	0	0	0	1.2E2	1.572	26666	7394	Sisma Y SLD	0	32.9	0	0	1.2E2	1.572
26667	7395	Sisma X SLV	39	0	0	0	1.5E2	1.576	26668	7395	Sisma Y SLV	0	39	0	0	1.5E2	1.576
26669	7395	Sisma X SLD	38.4	0	0	0	1.5E2	1.576	26670	7395	Sisma Y SLD	0	38.4	0	0	1.5E2	1.576
26671	7396	Sisma X SLV	39	0	0	0	1.5E2	1.576	26672	7396	Sisma Y SLV	0	39	0	0	1.5E2	1.576
26673	7396	Sisma X SLD	38.4	0	0	0	1.5E2	1.576	26674	7396	Sisma Y SLD	0	38.4	0	0	1.5E2	1.576
26675	7397	Sisma X SLV	43.3	0	0	0	1.6E2	1.576	26676	7397	Sisma Y SLV	0	43.3	0	0	1.6E2	1.576
26677	7397	Sisma X SLD	42.6	0	0	0	1.6E2	1.576	26678	7397	Sisma Y SLD	0	42.6	0	0	1.6E2	1.576
26679	7398	Sisma X SLV	27.3	0	0	0	1.0E2	1.577	26680	7398	Sisma Y SLV	0	27.3	0	0	1.0E2	1.577
26681	7398	Sisma X SLD	26.9	0	0	0	1.0E2	1.577	26682	7398	Sisma Y SLD	0	26.9	0	0	1.0E2	1.577
26683	7399	Sisma X SLV	19.7	0	0	0	73.108	1.578	26684	7399	Sisma Y SLV	0	19.7	0	0	73.108	1.578
26685	7399	Sisma X SLD	19.4	0	0	0	73.108	1.578	26686	7399	Sisma Y SLD	0	19.4	0	0	73.108	1.578
26687	7400	Sisma X SLV	43	0	0	0	1.6E2	1.579	26688	7400	Sisma Y SLV	0	43	0	0	1.6E2	1.579
26689	7400	Sisma X SLD	42.4	0	0	0	1.6E2	1.579	26690	7400	Sisma Y SLD	0	42.4	0	0	1.6E2	1.579
26691	7401	Sisma X SLV	43	0	0	0	1.6E2	1.579	26692	7401	Sisma Y SLV	0	43	0	0	1.6E2	1.579
26693	7401	Sisma X SLD	42.4	0	0	0	1.6E2	1.579	26694	7401	Sisma Y SLD	0	42.4	0	0	1.6E2	1.579
26695	7402	Sisma X SLV	27	0	0	0	1.0E2	1.58	26696	7402	Sisma Y SLV	0	27	0	0	1.0E2	1.58
26697	7402	Sisma X SLD	26.6	0	0	0	1.0E2	1.58	26698	7402	Sisma Y SLD	0	26.6	0	0	1.0E2	1.58
26699	7403	Sisma X SLV	46.3	0	0	0	1.7E2	1.58	26700	7403	Sisma Y SLV	0	46.3	0	0	1.7E2	1.58
26701	7403	Sisma X SLD	45.6	0	0	0	1.7E2	1.58	26702	7403	Sisma Y SLD	0	45.6	0	0	1.7E2	1.58
26703	7404	Sisma X SLV	40.8	0	0	0	1.5E2	1.581	26704	7404	Sisma Y SLV	0	40.8	0	0	1.5E2	1.581
26705	7404	Sisma X SLD	40.2	0	0	0	1.5E2	1.581	26706	7404	Sisma Y SLD	0	40.2	0	0	1.5E2	1.581
26707	7405	Sisma X SLV	40.8	0	0	0	1.5E2	1.581	26708	7405	Sisma Y SLV	0	40.8	0	0	1.5E2	1.581
26709	7405	Sisma X SLD	40.2	0	0	0	1.5E2	1.581	26710	7405	Sisma Y SLD	0	40.2	0	0	1.5E2	1.581
26711	7406	Sisma X SLV	45.2	0	0	0	1.7E2	1.582	26712	7406	Sisma Y SLV	0	45.2	0	0	1.7E2	1.582
26713	7406	Sisma X SLD	44.5	0	0	0	1.7E2	1.582	26714	7406	Sisma Y SLD	0	44.5	0	0	1.7E2	1.582
26715	7407	Sisma X SLV	48.3	0	0	0	1.8E2	1.584	26716	7407	Sisma Y SLV	0	48.3	0	0	1.8E2	1.584
26717	7407	Sisma X SLD	47.6	0	0	0	1.8E2	1.584	26718	7407	Sisma Y SLD	0	47.6	0	0	1.8E2	1.584
26719	7408	Sisma X SLV	48.3	0	0	0	1.8E2	1.584	26720	7408	Sisma Y SLV	0	48.3	0	0	1.8E2	1.584
26721	7408	Sisma X SLD	47.6	0	0	0	1.8E2	1.584	26722	7408	Sisma Y SLD	0	47.6	0	0	1.8E2	1.584
26723	7409	Sisma X SLV	60.7	0	0	0	2.2E2	1.587	26724	7409	Sisma Y SLV	0	60.7	0	0	2.2E2	1.587
26725	7409	Sisma X SLD	59.7	0	0	0	2.2E2	1.587	26726	7409	Sisma Y SLD	0	59.7	0	0	2.2E2	1.587
26727	7410	Sisma X SLV	60.4	0	0	0	2.2E2	1.587	26728	7410	Sisma Y SLV	0	60.4	0	0	2.2E2	1.587
26729	7410	Sisma X SLD	59.5	0	0	0	2.2E2	1.587	26730	7410	Sisma Y SLD	0	59.5	0	0	2.2E2	1.587
26731	7411	Sisma X SLV	60.4	0	0	0	223.19	1.587	26732	7411	Sisma Y SLV	0	60.4	0	0	223.19	1.587
26733	7411	Sisma X SLD	59.5	0	0	0	223.19	1.587	26734	7411	Sisma Y SLD	0	59.5	0	0	223.19	1.587
26735	7412	Sisma X SLV	93	0	0	0	3.4E2	1.587	26736	7412	Sisma Y SLV	0	93	0	0	3.4E2	1.587
26737	7412	Sisma X SLD	91.5	0	0	0	3.4E2	1.587	26738	7412	Sisma Y SLD	0	91.5	0	0	3.4E2	1.587
26739	7413	Sisma X SLV	92.5	0	0	0	3.4E2	1.587	26740	7413	Sisma Y SLV	0	92.5	0	0	3.4E2	1.587
26741	7413	Sisma X SLD	91	0	0	0	3.4E2	1.587	26742	7413	Sisma Y SLD	0	91	0	0	3.4E2	1.587
26743	7414	Sisma X SLV	61.5	0	0	0	2.3E2	1.587	26744	7414	Sisma Y SLV	0	61.5	0	0	2.3E2	1.587
26745	7414	Sisma X SLD	60.6	0	0	0	2.3E2	1.587	26746	7414	Sisma Y SLD	0	60.6	0	0	2.3E2	1.587

Indice	Nodo	Condizione	Fx	Fy	Fz	Mz	Peso	Gamma	Indice	Nodo	Condizione	Fx	Fy	Fz	Mz	Peso	Gamma
26747	7415	Sisma X SLV	61.5	0	0	0	2.3E2	1.587	26748	7415	Sisma Y SLV	0	61.5	0	0	2.3E2	1.587
26749	7415	Sisma X SLD	60.6	0	0	0	2.3E2	1.587	26750	7415	Sisma Y SLD	0	60.6	0	0	2.3E2	1.587
26751	7416	Sisma X SLV	61.5	0	0	0	2.3E2	1.587	26752	7416	Sisma Y SLV	0	61.5	0	0	2.3E2	1.587
26753	7416	Sisma X SLD	60.6	0	0	0	2.3E2	1.587	26754	7416	Sisma Y SLD	0	60.6	0	0	2.3E2	1.587
26755	7417	Sisma X SLV	61.5	0	0	0	2.3E2	1.587	26756	7417	Sisma Y SLV	0	61.5	0	0	2.3E2	1.587
26757	7417	Sisma X SLD	60.6	0	0	0	2.3E2	1.587	26758	7417	Sisma Y SLD	0	60.6	0	0	2.3E2	1.587
26759	7418	Sisma X SLV	62.4	0	0	0	2.3E2	1.587	26760	7418	Sisma Y SLV	0	62.4	0	0	2.3E2	1.587
26761	7418	Sisma X SLD	61.4	0	0	0	2.3E2	1.587	26762	7418	Sisma Y SLD	0	61.4	0	0	2.3E2	1.587
26763	7419	Sisma X SLV	61.4	0	0	0	2.3E2	1.587	26764	7419	Sisma Y SLV	0	61.4	0	0	2.3E2	1.587
26765	7419	Sisma X SLD	60.5	0	0	0	2.3E2	1.587	26766	7419	Sisma Y SLD	0	60.5	0	0	2.3E2	1.587
26767	7420	Sisma X SLV	93.5	0	0	0	3.5E2	1.587	26768	7420	Sisma Y SLV	0	93.5	0	0	3.5E2	1.587
26769	7420	Sisma X SLD	92	0	0	0	3.5E2	1.587	26770	7420	Sisma Y SLD	0	92	0	0	3.5E2	1.587
26771	7421	Sisma X SLV	93.5	0	0	0	3.5E2	1.587	26772	7421	Sisma Y SLV	0	93.5	0	0	3.5E2	1.587
26773	7421	Sisma X SLD	92	0	0	0	3.5E2	1.587	26774	7421	Sisma Y SLD	0	92	0	0	3.5E2	1.587
26775	7422	Sisma X SLV	39.6	0	0	0	1.5E2	1.587	26776	7422	Sisma Y SLV	0	39.6	0	0	1.5E2	1.587
26777	7422	Sisma X SLD	38.9	0	0	0	1.5E2	1.587	26778	7422	Sisma Y SLD	0	38.9	0	0	1.5E2	1.587
26779	7423	Sisma X SLV	39.6	0	0	0	1.5E2	1.587	26780	7423	Sisma Y SLV	0	39.6	0	0	1.5E2	1.587
26781	7423	Sisma X SLD	38.9	0	0	0	1.5E2	1.587	26782	7423	Sisma Y SLD	0	38.9	0	0	1.5E2	1.587
26783	7424	Sisma X SLV	39.6	0	0	0	1.5E2	1.587	26784	7424	Sisma Y SLV	0	39.6	0	0	1.5E2	1.587
26785	7424	Sisma X SLD	38.9	0	0	0	1.5E2	1.587	26786	7424	Sisma Y SLD	0	38.9	0	0	1.5E2	1.587
26787	7425	Sisma X SLV	39.6	0	0	0	1.5E2	1.587	26788	7425	Sisma Y SLV	0	39.6	0	0	1.5E2	1.587
26789	7425	Sisma X SLD	38.9	0	0	0	1.5E2	1.587	26790	7425	Sisma Y SLD	0	38.9	0	0	1.5E2	1.587
26791	7426	Sisma X SLV	39.6	0	0	0	1.5E2	1.587	26792	7426	Sisma Y SLV	0	39.6	0	0	1.5E2	1.587
26793	7426	Sisma X SLD	38.9	0	0	0	1.5E2	1.587	26794	7426	Sisma Y SLD	0	38.9	0	0	1.5E2	1.587
26795	7427	Sisma X SLV	39.6	0	0	0	1.5E2	1.587	26796	7427	Sisma Y SLV	0	39.6	0	0	1.5E2	1.587
26797	7427	Sisma X SLD	38.9	0	0	0	1.5E2	1.587	26798	7427	Sisma Y SLD	0	38.9	0	0	1.5E2	1.587
26799	7428	Sisma X SLV	39.6	0	0	0	1.5E2	1.587	26800	7428	Sisma Y SLV	0	39.6	0	0	1.5E2	1.587
26801	7428	Sisma X SLD	38.9	0	0	0	1.5E2	1.587	26802	7428	Sisma Y SLD	0	38.9	0	0	1.5E2	1.587
26803	7429	Sisma X SLV	39.6	0	0	0	1.5E2	1.587	26804	7429	Sisma Y SLV	0	39.6	0	0	1.5E2	1.587
26805	7429	Sisma X SLD	38.9	0	0	0	1.5E2	1.587	26806	7429	Sisma Y SLD	0	38.9	0	0	1.5E2	1.587
26807	7430	Sisma X SLV	39.6	0	0	0	1.5E2	1.587	26808	7430	Sisma Y SLV	0	39.6	0	0	1.5E2	1.587
26809	7430	Sisma X SLD	39	0	0	0	1.5E2	1.587	26810	7430	Sisma Y SLD	0	39	0	0	1.5E2	1.587
26811	7431	Sisma X SLV	39.6	0	0	0	1.5E2	1.587	26812	7431	Sisma Y SLV	0	39.6	0	0	1.5E2	1.587
26813	7431	Sisma X SLD	39	0	0	0	1.5E2	1.587	26814	7431	Sisma Y SLD	0	39	0	0	1.5E2	1.587
26815	7432	Sisma X SLV	39.8	0	0	0	1.5E2	1.587	26816	7432	Sisma Y SLV	0	39.8	0	0	1.5E2	1.587
26817	7432	Sisma X SLD	39.1	0	0	0	1.5E2	1.587	26818	7432	Sisma Y SLD	0	39.1	0	0	1.5E2	1.587
26819	7433	Sisma X SLV	39.9	0	0	0	1.5E2	1.587	26820	7433	Sisma Y SLV	0	39.9	0	0	1.5E2	1.587
26821	7433	Sisma X SLD	39.3	0	0	0	1.5E2	1.587	26822	7433	Sisma Y SLD	0	39.3	0	0	1.5E2	1.587
26823	7434	Sisma X SLV	40.1	0	0	0	1.5E2	1.587	26824	7434	Sisma Y SLV	0	40.1	0	0	1.5E2	1.587
26825	7434	Sisma X SLD	39.5	0	0	0	1.5E2	1.587	26826	7434	Sisma Y SLD	0	39.5	0	0	1.5E2	1.587
26827	7435	Sisma X SLV	82.8	0	0	0	3.1E2	1.587	26828	7435	Sisma Y SLV	0	82.8	0	0	3.1E2	1.587
26829	7435	Sisma X SLD	81.5	0	0	0	3.1E2	1.587	26830	7435	Sisma Y SLD	0	81.5	0	0	3.1E2	1.587
26831	7436	Sisma X SLV	62.1	0	0	0	2.3E2	1.587	26832	7436	Sisma Y SLV	0	62.1	0	0	2.3E2	1.587
26833	7436	Sisma X SLD	61.1	0	0	0	2.3E2	1.587	26834	7436	Sisma Y SLD	0	61.1	0	0	2.3E2	1.587
26835	7437	Sisma X SLV	89.7	0	0	0	3.3E2	1.587	26836	7437	Sisma Y SLV	0	89.7	0	0	3.3E2	1.587
26837	7437	Sisma X SLD	88.3	0	0	0	3.3E2	1.587	26838	7437	Sisma Y SLD	0	88.3	0	0	3.3E2	1.587
26839	7438	Sisma X SLV	61.5	0	0	0	2.3E2	1.587	26840	7438	Sisma Y SLV	0	61.5	0	0	2.3E2	1.587
26841	7438	Sisma X SLD	60.6	0	0	0	2.3E2	1.587	26842	7438	Sisma Y SLD	0	60.6	0	0	2.3E2	1.587
26843	7439	Sisma X SLV	61.5	0	0	0	2.3E2	1.587	26844	7439	Sisma Y SLV	0	61.5	0	0	2.3E2	1.587
26845	7439	Sisma X SLD	60.6	0	0	0	2.3E2	1.587	26846	7439	Sisma Y SLD	0	60.6	0	0	2.3E2	1.587
26847	7440	Sisma X SLV	61.5	0	0	0	2.3E2	1.587	26848	7440	Sisma Y SLV	0	61.5	0	0	2.3E2	1.587
26849	7440	Sisma X SLD	60.6	0	0	0	2.3E2	1.587	26850	7440	Sisma Y SLD	0	60.6	0	0	2.3E2	1.587
26851	7441	Sisma X SLV	61.5	0	0	0	2.3E2	1.587	26852	7441	Sisma Y SLV	0	61.5	0	0	2.3E2	1.587
26853	7441	Sisma X SLD	60.6	0	0	0	2.3E2	1.587	26854	7441	Sisma Y SLD	0	60.6	0	0	2.3E2	1.587
26855	7442	Sisma X SLV	64.1	0	0	0	2.4E2	1.587	26856	7442	Sisma Y SLV	0	64.1	0	0	2.4E2	1.587
26857	7442	Sisma X SLD	63.1	0	0	0	2.4E2	1.587	26858	7442	Sisma Y SLD	0	63.1	0	0	2.4E2	1.587
26859	7443	Sisma X SLV	60.5	0	0	0	2.2E2	1.587	26860	7443	Sisma Y SLV	0	60.5	0	0	2.2E2	1.587
26861	7443	Sisma X SLD	59.5	0	0	0	2.2E2	1.587	26862	7443	Sisma Y SLD	0	59.5	0	0	2.2E2	1.587
26863	7444	Sisma X SLV	61.5	0	0	0	2.3E2	1.587	26864	7444	Sisma Y SLV	0	61.5	0	0	2.3E2	1.587
26865	7444	Sisma X SLD	60.6	0	0	0	2.3E2	1.587	26866	7444	Sisma Y SLD	0	60.6	0	0	2.3E2	1.587
26867	7445	Sisma X SLV	61.5	0	0	0	2.3E2	1.587	26868	7445	Sisma Y SLV	0	61.5	0	0	2.3E2	1.587
26869	7445	Sisma X SLD	60.5	0	0	0	2.3E2	1.587	26870	7445	Sisma Y SLD	0	60.5	0	0	2.3E2	1.587
26871	7446	Sisma X SLV	61.5	0	0	0	2.3E2	1.587	26872	7446	Sisma Y SLV	0	61.5	0	0	2.3E2	1.587
26873	7446	Sisma X SLD	60.5	0	0	0	2.3E2	1.587	26874	7446	Sisma Y SLD	0	60.5	0	0	2.3E2	1.587
26875	7447	Sisma X SLV	60.5	0	0	0	2.2E2	1.587	26876	7447	Sisma Y SLV	0	60.5	0	0	2.2E2	1.587
26877	7447	Sisma X SLD	59.6	0	0	0	2.2E2	1.587	26878	7447	Sisma Y SLD	0	59.6	0	0	2.2E2	1.587
26879	7448	Sisma X SLV	61.5	0	0	0	227.19	1.587	26880	7448	Sisma Y SLV	0	61.5	0	0	227.19	1.587
26881	7448	Sisma X SLD	60.5	0	0	0	227.19	1.587	26882	7448	Sisma Y SLD	0	60.5	0	0	227.19	1.587
26883	7449	Sisma X SLV	61.5	0	0	0	2.3E2	1.587	26884	7449	Sisma Y SLV	0	61.5	0	0	2.3E2	1.587
26885	7449	Sisma X SLD	60.5	0	0	0	2.3E2	1.587	26886	7449	Sisma Y SLD	0	60.5	0	0	2.3E2	1.587
26887	7450	Sisma X SLV	61.4	0	0	0	226.96	1.587	26888	7450	Sisma Y SLV	0	61.4	0	0	226.96	1.587
26889	7450	Sisma X SLD	60.5	0	0	0	226.96	1.587	26890	7450	Sisma Y SLD	0	60.5	0	0	226.96	1.587
26891	7451	Sisma X SLV	61	0	0	0	2.3E2	1.587	26892	7451	Sisma Y SLV	0	61	0	0	2.3E2	1.587
26893	7451	Sisma X SLD	60.1	0	0	0	2.3E2	1.587	26894	7451	Sisma Y SLD	0	60.1	0	0	2.3E2	1.587
26895	7452	Sisma X SLV	62	0	0	0	2.3E2	1.587	26896	7452	Sisma Y SLV	0	62	0	0	2.3E2	1.587
26897	7452	Sisma X SLD	61	0	0	0	2.3E2	1.587	26898	7452	Sisma Y SLD	0	61	0	0	2.3E2	1.587
26899	7453	Sisma X SLV	62.3	0	0	0	2.3E2	1.587	26900	7453	Sisma Y SLV	0	62.3	0	0	2.3E2	1.587
26901	7453	Sisma X SLD	61.3	0	0	0	2.3E2	1.587	26902	7453	Sisma Y SLD	0	61.3	0	0	2.3E2	1.587
26903	7454	Sisma X SLV	60.6	0	0	0	2.2E2	1.587	26904	7454	Sisma Y SLV	0	60.6	0	0	2.2E2	1.587
26905	7454	Sisma X SLD	59.7	0	0	0	2.2E2	1.587	26906	7454	Sisma Y SLD	0	59.7	0	0	2.2E2	1.587
26907	7455	Sisma X SLV	61.5	0	0	0	2.3E2	1.587	26908	7455	Sisma Y SLV	0	61.5	0	0	2.3E2	1.587
26909	7455	Sisma X SLD	60.5	0	0	0	2.3E2	1.587	26910	7455	Sisma Y SLD	0	60.5	0	0	2.3E2	1.587
26911	7456	Sisma X SLV	61.6	0	0	0	2.3E2	1.587	26912	7456	Sisma Y SLV	0	61.6	0	0	2.3E2	1.587
26913	7456	Sisma X SLD	60.6	0	0	0	2.3E2	1.587	26914	7456	Sisma Y SLD	0	60.6	0	0	2.3E2	1.587
26915	7457	Sisma X SLV	61.4	0	0	0	2.3E2	1.587	26916	7457	Sisma Y SLV	0	61.4	0	0	2.3E2	1.587
26917	7457	Sisma X SLD	60.4	0	0	0	2.3E2	1.587	26918	7457	Sisma Y SLD	0	60.4	0	0	2.3E2	1.587
26919	7458	Sisma X SLV	62.4	0	0	0	2.3E2	1.587	26920	7458	Sisma Y SLV	0	62.4	0	0	2.3E2	1.587
26921	7458	Sisma X SLD	61.4	0	0	0	2.3E2	1.587	26922	7458	Sisma Y SLD	0	61.4	0	0	2.3E2	1.587
26923	7459	Sisma X SLV	61.4	0	0	0	2.3E2	1.587	26924	7459	Sisma Y SLV	0	61.4	0	0	2.3E2	1.587
26925	7459	Sisma X SLD	60.4	0	0	0	2.3E2	1.587	26926	7459	Sisma Y SLD	0	60.4	0	0	2.3E2	1.587
26927	7460	Sisma X SLV	62.1	0	0	0	2.3E2	1.587	26928	7460	Sisma Y SLV	0	62.1	0	0	2.3E2	1.587
26929	7460	Sisma X SLD	61.1	0	0	0	2.3E2	1.587	26930	7460	Sisma Y SLD	0	61.1	0	0	2.3E2	1.587
26931	7461	Sisma X SLV	60.7	0	0	0	2.2E2	1.587	26932	7461	Sisma Y SLV	0	60.7	0	0	2.2E2	1.587
26933	7461	Sisma X SLD	59.7	0	0	0	2.2E2	1.587	26934	7461	Sisma Y SLD	0	59.7	0	0	2.2E2	1.587
26935	7462	Sisma X SLV	60.7	0	0	0	2.2E2	1.587	26936	7462	Sisma Y SLV	0	60.7	0	0	2.2E2	1.587
26937	7462	Sisma X SLD	59.7	0	0	0	2.2E2	1.587	26938	7462	Sisma Y SLD	0	59.7	0	0	2.2E2	1.587
26939	7463	Sisma X SLV	61.4	0	0	0	2.3E2	1.587	26940	7463	Sisma Y SLV	0	61.4	0	0	2.3E2	1.587
26941	7463	Sisma X SLD	60.5	0	0	0	2.3E2	1.587	26942	7463	Sisma Y SLD	0	60.5	0	0	2.3E2	1.587
26943	7464	Sisma X SLV	61.6	0	0	0	2.3E2	1.587	26944	7464	Sisma Y SLV	0	61.6	0	0	2.3E2	1.587
26945	7464	Sisma X SLD	60.7	0	0	0	2.3E2	1.587	26946	7464	Sisma Y SLD	0	60.7	0	0	2.3E2	1.587
26947	7465	Sisma X SLV	61.6	0	0	0	2.3E2	1.587	26948	7465	Sisma Y SLV	0	61.6	0	0	2.3E2	1.587
26949	7465	Sisma X SLD	60.7	0	0	0	2.3E2	1.587	26950	7465	Sisma Y SLD	0	60.7	0	0	2.3E2	1.587
26951	7466	Sisma X SLV	61.6	0	0	0	2.3E2	1.587	26952	7466	Sisma Y SLV	0	61.6	0	0	2.3E2	1.587
26953	7466	Sisma X SLD	60.6	0	0	0	2.3E2	1.587	26954	7466	Sisma Y SLD	0	60.6	0	0	2.3E2	1.587

Indice	Nodo	Condizione	Fx	Fy	Fz	Mz	Peso	Gamma	Indice	Nodo	Condizione	Fx	Fy	Fz	Mz	Peso	Gamma
26955	7467	Sisma X SLV	61.9	0	0	0	2.3E2	1.587	26956	7467	Sisma Y SLV	0	61.9	0	0	2.3E2	1.587
26957	7467	Sisma X SLD	60.9	0	0	0	2.3E2	1.587	26958	7467	Sisma Y SLD	0	60.9	0	0	2.3E2	1.587
26959	7468	Sisma X SLV	62.1	0	0	0	2.3E2	1.587	26960	7468	Sisma Y SLV	0	62.1	0	0	2.3E2	1.587
26961	7468	Sisma X SLD	61.1	0	0	0	2.3E2	1.587	26962	7468	Sisma Y SLD	0	61.1	0	0	2.3E2	1.587
26963	7469	Sisma X SLV	61.5	0	0	0	226.97	1.587	26964	7469	Sisma Y SLV	0	61.5	0	0	226.97	1.587
26965	7469	Sisma X SLD	60.5	0	0	0	226.97	1.587	26966	7469	Sisma Y SLD	0	60.5	0	0	226.97	1.587
26967	7470	Sisma X SLV	61.4	0	0	0	2.3E2	1.587	26968	7470	Sisma Y SLV	0	61.4	0	0	2.3E2	1.587
26969	7470	Sisma X SLD	60.4	0	0	0	2.3E2	1.587	26970	7470	Sisma Y SLD	0	60.4	0	0	2.3E2	1.587
26971	7471	Sisma X SLV	61.6	0	0	0	2.3E2	1.587	26972	7471	Sisma Y SLV	0	61.6	0	0	2.3E2	1.587
26973	7471	Sisma X SLD	60.6	0	0	0	2.3E2	1.587	26974	7471	Sisma Y SLD	0	60.6	0	0	2.3E2	1.587
26975	7472	Sisma X SLV	60.4	0	0	0	2.2E2	1.587	26976	7472	Sisma Y SLV	0	60.4	0	0	2.2E2	1.587
26977	7472	Sisma X SLD	59.4	0	0	0	2.2E2	1.587	26978	7472	Sisma Y SLD	0	59.4	0	0	2.2E2	1.587
26979	7473	Sisma X SLV	60.6	0	0	0	2.2E2	1.587	26980	7473	Sisma Y SLV	0	60.6	0	0	2.2E2	1.587
26981	7473	Sisma X SLD	59.6	0	0	0	2.2E2	1.587	26982	7473	Sisma Y SLD	0	59.6	0	0	2.2E2	1.587
26983	7474	Sisma X SLV	61.8	0	0	0	2.3E2	1.587	26984	7474	Sisma Y SLV	0	61.8	0	0	2.3E2	1.587
26985	7474	Sisma X SLD	60.8	0	0	0	2.3E2	1.587	26986	7474	Sisma Y SLD	0	60.8	0	0	2.3E2	1.587
26987	7475	Sisma X SLV	61.6	0	0	0	2.3E2	1.587	26988	7475	Sisma Y SLV	0	61.6	0	0	2.3E2	1.587
26989	7475	Sisma X SLD	60.6	0	0	0	2.3E2	1.587	26990	7475	Sisma Y SLD	0	60.6	0	0	2.3E2	1.587
26991	7476	Sisma X SLV	61.8	0	0	0	2.3E2	1.587	26992	7476	Sisma Y SLV	0	61.8	0	0	2.3E2	1.587
26993	7476	Sisma X SLD	60.8	0	0	0	2.3E2	1.587	26994	7476	Sisma Y SLD	0	60.8	0	0	2.3E2	1.587
26995	7477	Sisma X SLV	61.4	0	0	0	2.3E2	1.587	26996	7477	Sisma Y SLV	0	61.4	0	0	2.3E2	1.587
26997	7477	Sisma X SLD	60.4	0	0	0	2.3E2	1.587	26998	7477	Sisma Y SLD	0	60.4	0	0	2.3E2	1.587
26999	7478	Sisma X SLV	61.5	0	0	0	2.3E2	1.587	27000	7478	Sisma Y SLV	0	61.5	0	0	2.3E2	1.587
27001	7478	Sisma X SLD	60.5	0	0	0	2.3E2	1.587	27002	7478	Sisma Y SLD	0	60.5	0	0	2.3E2	1.587
27003	7479	Sisma X SLV	60.3	0	0	0	2.2E2	1.587	27004	7479	Sisma Y SLV	0	60.3	0	0	2.2E2	1.587
27005	7479	Sisma X SLD	59.3	0	0	0	2.2E2	1.587	27006	7479	Sisma Y SLD	0	59.3	0	0	2.2E2	1.587
27007	7480	Sisma X SLV	60.4	0	0	0	2.2E2	1.587	27008	7480	Sisma Y SLV	0	60.4	0	0	2.2E2	1.587
27009	7480	Sisma X SLD	59.5	0	0	0	2.2E2	1.587	27010	7480	Sisma Y SLD	0	59.5	0	0	2.2E2	1.587
27011	7481	Sisma X SLV	38.8	0	0	0	1.4E2	1.587	27012	7481	Sisma Y SLV	0	38.8	0	0	1.4E2	1.587
27013	7481	Sisma X SLD	38.2	0	0	0	1.4E2	1.587	27014	7481	Sisma Y SLD	0	38.2	0	0	1.4E2	1.587
27015	7482	Sisma X SLV	60.3	0	0	0	2.2E2	1.587	27016	7482	Sisma Y SLV	0	60.3	0	0	2.2E2	1.587
27017	7482	Sisma X SLD	59.4	0	0	0	2.2E2	1.587	27018	7482	Sisma Y SLD	0	59.4	0	0	2.2E2	1.587
27019	7483	Sisma X SLV	64	0	0	0	2.4E2	1.587	27020	7483	Sisma Y SLV	0	64	0	0	2.4E2	1.587
27021	7483	Sisma X SLD	63	0	0	0	2.4E2	1.587	27022	7483	Sisma Y SLD	0	63	0	0	2.4E2	1.587
27023	7484	Sisma X SLV	65.6	0	0	0	2.4E2	1.587	27024	7484	Sisma Y SLV	0	65.6	0	0	2.4E2	1.587
27025	7484	Sisma X SLD	64.6	0	0	0	2.4E2	1.587	27026	7484	Sisma Y SLD	0	64.6	0	0	2.4E2	1.587
27027	7485	Sisma X SLV	65.6	0	0	0	2.4E2	1.587	27028	7485	Sisma Y SLV	0	65.6	0	0	2.4E2	1.587
27029	7485	Sisma X SLD	64.5	0	0	0	2.4E2	1.587	27030	7485	Sisma Y SLD	0	64.5	0	0	2.4E2	1.587
27031	7486	Sisma X SLV	38.8	0	0	0	1.4E2	1.587	27032	7486	Sisma Y SLV	0	38.8	0	0	1.4E2	1.587
27033	7486	Sisma X SLD	38.2	0	0	0	1.4E2	1.587	27034	7486	Sisma Y SLD	0	38.2	0	0	1.4E2	1.587
27035	7487	Sisma X SLV	58.6	0	0	0	2.2E2	1.587	27036	7487	Sisma Y SLV	0	58.6	0	0	2.2E2	1.587
27037	7487	Sisma X SLD	57.6	0	0	0	2.2E2	1.587	27038	7487	Sisma Y SLD	0	57.6	0	0	2.2E2	1.587
27039	7488	Sisma X SLV	60.2	0	0	0	2.2E2	1.587	27040	7488	Sisma Y SLV	0	60.2	0	0	2.2E2	1.587
27041	7488	Sisma X SLD	59.2	0	0	0	2.2E2	1.587	27042	7488	Sisma Y SLD	0	59.2	0	0	2.2E2	1.587
27043	7489	Sisma X SLV	63.8	0	0	0	2.4E2	1.587	27044	7489	Sisma Y SLV	0	63.8	0	0	2.4E2	1.587
27045	7489	Sisma X SLD	62.7	0	0	0	2.4E2	1.587	27046	7489	Sisma Y SLD	0	62.7	0	0	2.4E2	1.587
27047	7490	Sisma X SLV	38.8	0	0	0	1.4E2	1.587	27048	7490	Sisma Y SLV	0	38.8	0	0	1.4E2	1.587
27049	7490	Sisma X SLD	38.2	0	0	0	1.4E2	1.587	27050	7490	Sisma Y SLD	0	38.2	0	0	1.4E2	1.587
27051	7491	Sisma X SLV	65.3	0	0	0	2.4E2	1.587	27052	7491	Sisma Y SLV	0	65.3	0	0	2.4E2	1.587
27053	7491	Sisma X SLD	64.2	0	0	0	2.4E2	1.587	27054	7491	Sisma Y SLD	0	64.2	0	0	2.4E2	1.587
27055	7492	Sisma X SLV	65.3	0	0	0	2.4E2	1.587	27056	7492	Sisma Y SLV	0	65.3	0	0	2.4E2	1.587
27057	7492	Sisma X SLD	64.2	0	0	0	2.4E2	1.587	27058	7492	Sisma Y SLD	0	64.2	0	0	2.4E2	1.587
27059	7493	Sisma X SLV	63.6	0	0	0	234.7	1.587	27060	7493	Sisma Y SLV	0	63.6	0	0	234.7	1.587
27061	7493	Sisma X SLD	62.5	0	0	0	234.7	1.587	27062	7493	Sisma Y SLD	0	62.5	0	0	234.7	1.587
27063	7494	Sisma X SLV	38.8	0	0	0	1.4E2	1.587	27064	7494	Sisma Y SLV	0	38.8	0	0	1.4E2	1.587
27065	7494	Sisma X SLD	38.2	0	0	0	1.4E2	1.587	27066	7494	Sisma Y SLD	0	38.2	0	0	1.4E2	1.587
27067	7495	Sisma X SLV	63.5	0	0	0	2.3E2	1.587	27068	7495	Sisma Y SLV	0	63.5	0	0	2.3E2	1.587
27069	7495	Sisma X SLD	62.5	0	0	0	2.3E2	1.587	27070	7495	Sisma Y SLD	0	62.5	0	0	2.3E2	1.587
27071	7496	Sisma X SLV	59.1	0	0	0	2.2E2	1.587	27072	7496	Sisma Y SLV	0	59.1	0	0	2.2E2	1.587
27073	7496	Sisma X SLD	58.2	0	0	0	2.2E2	1.587	27074	7496	Sisma Y SLD	0	58.2	0	0	2.2E2	1.587
27075	7497	Sisma X SLV	65	0	0	0	2.4E2	1.587	27076	7497	Sisma Y SLV	0	65	0	0	2.4E2	1.587
27077	7497	Sisma X SLD	63.9	0	0	0	2.4E2	1.587	27078	7497	Sisma Y SLD	0	63.9	0	0	2.4E2	1.587
27079	7498	Sisma X SLV	65	0	0	0	2.4E2	1.587	27080	7498	Sisma Y SLV	0	65	0	0	2.4E2	1.587
27081	7498	Sisma X SLD	63.9	0	0	0	2.4E2	1.587	27082	7498	Sisma Y SLD	0	63.9	0	0	2.4E2	1.587
27083	7499	Sisma X SLV	60.2	0	0	0	2.2E2	1.587	27084	7499	Sisma Y SLV	0	60.2	0	0	2.2E2	1.587
27085	7499	Sisma X SLD	59.2	0	0	0	2.2E2	1.587	27086	7499	Sisma Y SLD	0	59.2	0	0	2.2E2	1.587
27087	7500	Sisma X SLV	38.8	0	0	0	1.4E2	1.587	27088	7500	Sisma Y SLV	0	38.8	0	0	1.4E2	1.587
27089	7500	Sisma X SLD	38.2	0	0	0	1.4E2	1.587	27090	7500	Sisma Y SLD	0	38.2	0	0	1.4E2	1.587
27091	7501	Sisma X SLV	64.8	0	0	0	2.4E2	1.587	27092	7501	Sisma Y SLV	0	64.8	0	0	2.4E2	1.587
27093	7501	Sisma X SLD	63.8	0	0	0	2.4E2	1.587	27094	7501	Sisma Y SLD	0	63.8	0	0	2.4E2	1.587
27095	7502	Sisma X SLV	64.8	0	0	0	2.4E2	1.587	27096	7502	Sisma Y SLV	0	64.8	0	0	2.4E2	1.587
27097	7502	Sisma X SLD	63.8	0	0	0	2.4E2	1.587	27098	7502	Sisma Y SLD	0	63.8	0	0	2.4E2	1.587
27099	7503	Sisma X SLV	63.3	0	0	0	2.3E2	1.587	27100	7503	Sisma Y SLV	0	63.3	0	0	2.3E2	1.587
27101	7503	Sisma X SLD	62.3	0	0	0	2.3E2	1.587	27102	7503	Sisma Y SLD	0	62.3	0	0	2.3E2	1.587
27103	7504	Sisma X SLV	38.8	0	0	0	1.4E2	1.587	27104	7504	Sisma Y SLV	0	38.8	0	0	1.4E2	1.587
27105	7504	Sisma X SLD	38.2	0	0	0	1.4E2	1.587	27106	7504	Sisma Y SLD	0	38.2	0	0	1.4E2	1.587
27107	7505	Sisma X SLV	60	0	0	0	2.2E2	1.587	27108	7505	Sisma Y SLV	0	60	0	0	2.2E2	1.587
27109	7505	Sisma X SLD	59.1	0	0	0	2.2E2	1.587	27110	7505	Sisma Y SLD	0	59.1	0	0	2.2E2	1.587
27111	7506	Sisma X SLV	64.8	0	0	0	2.4E2	1.587	27112	7506	Sisma Y SLV	0	64.8	0	0	2.4E2	1.587
27113	7506	Sisma X SLD	63.7	0	0	0	2.4E2	1.587	27114	7506	Sisma Y SLD	0	63.7	0	0	2.4E2	1.587
27115	7507	Sisma X SLV	64.8	0	0	0	2.4E2	1.587	27116	7507	Sisma Y SLV	0	64.8	0	0	2.4E2	1.587
27117	7507	Sisma X SLD	63.8	0	0	0	2.4E2	1.587	27118	7507	Sisma Y SLD	0	63.8	0	0	2.4E2	1.587
27119	7508	Sisma X SLV	60.3	0	0	0	2.2E2	1.587	27120	7508	Sisma Y SLV	0	60.3	0	0	2.2E2	1.587
27121	7508	Sisma X SLD	59.4	0	0	0	2.2E2	1.587	27122	7508	Sisma Y SLD	0	59.4	0	0	2.2E2	1.587
27123	7509	Sisma X SLV	38.8	0	0	0	143.13	1.587	27124	7509	Sisma Y SLV	0	38.8	0	0	143.13	1.587
27125	7509	Sisma X SLD	38.1	0	0	0	143.13	1.587	27126	7509	Sisma Y SLD	0	38.1	0	0	143.13	1.587
27127	7510	Sisma X SLV	63.4	0	0	0	2.3E2	1.587	27128	7510	Sisma Y SLV	0	63.4	0	0	2.3E2	1.587
27129	7510	Sisma X SLD	62.4	0	0	0	2.3E2	1.587	27130	7510	Sisma Y SLD	0	62.4	0	0	2.3E2	1.587
27131	7511	Sisma X SLV	60.9	0	0	0	2.2E2	1.587	27132	7511	Sisma Y SLV	0	60.9	0	0	2.2E2	1.587
27133	7511	Sisma X SLD	59.9	0	0	0	2.2E2	1.587	27134	7511	Sisma Y SLD	0	59.9	0	0	2.2E2	1.587
27135	7512	Sisma X SLV	64.8	0	0	0	2.4E2	1.587	27136	7512	Sisma Y SLV	0	64.8	0	0	2.4E2	1.587
27137	7512	Sisma X SLD	63.8	0	0	0	2.4E2	1.587	27138	7512	Sisma Y SLD	0	63.8	0	0	2.4E2	1.587
27139	7513	Sisma X SLV	64.8	0	0	0	2.4E2	1.587	27140	7513	Sisma Y SLV	0	64.8	0	0	2.4E2	1.587
27141	7513	Sisma X SLD	63.8	0	0	0	2.4E2	1.587	27142	7513	Sisma Y SLD	0	63.8	0	0	2.4E2	1.587
27143	7514	Sisma X SLV	38.8	0	0	0	1.4E2	1.587	27144	7514	Sisma Y SLV	0	38.8	0	0	1.4E2	1.587
27145	7514	Sisma X SLD	38.1	0	0	0	1.4E2	1.587	27146	7514	Sisma Y SLD	0	38.1	0	0	1.4E2	1.587
27147	7515	Sisma X SLV	63.5	0	0	0	2.3E2	1.587	27148	7515	Sisma Y SLV	0	63.5	0	0	2.3E2	1.587
27149	7515	Sisma X SLD	62.4	0	0	0	2.3E2	1.587	27150	7515	Sisma Y SLD	0	62.4	0	0	2.3E2	1.587
27151	7516	Sisma X SLV	61.3	0	0	0	2.3E2	1.587	27152	7516	Sisma Y SLV	0	61.3	0	0	2.3E2	1.587
27153	7516	Sisma X SLD	60.4	0	0	0	2.3E2	1.587	27154	7516	Sisma Y SLD	0	60.4	0	0	2.3E2	1.587
27155	7517	Sisma X SLV	61.4	0	0	0	2.3E2	1.587	27156	7517	Sisma Y SLV	0	61.4	0	0	2.3E2	1.587

Indice	Nodo	Condizione	Fx	Fy	Fz	Mz	Peso	Gamma	Indice	Nodo	Condizione	Fx	Fy	Fz	Mz	Peso	Gamma
27157	7517	Sisma X SLD	60.5	0	0	0	2.3E2	1.587	27158	7517	Sisma Y SLD	0	60.5	0	0	2.3E2	1.587
27159	7518	Sisma X SLV	60.4	0	0	0	2.2E2	1.587	27160	7518	Sisma Y SLV	0	60.4	0	0	2.2E2	1.587
27161	7518	Sisma X SLD	59.5	0	0	0	2.2E2	1.587	27162	7518	Sisma Y SLD	0	59.5	0	0	2.2E2	1.587
27163	7519	Sisma X SLV	61.3	0	0	0	2.3E2	1.587	27164	7519	Sisma Y SLV	0	61.3	0	0	2.3E2	1.587
27165	7519	Sisma X SLD	60.3	0	0	0	2.3E2	1.587	27166	7519	Sisma Y SLD	0	60.3	0	0	2.3E2	1.587
27167	7520	Sisma X SLV	61.1	0	0	0	2.3E2	1.587	27168	7520	Sisma Y SLV	0	61.1	0	0	2.3E2	1.587
27169	7520	Sisma X SLD	60.1	0	0	0	2.3E2	1.587	27170	7520	Sisma Y SLD	0	60.1	0	0	2.3E2	1.587
27171	7521	Sisma X SLV	63.8	0	0	0	2.4E2	1.587	27172	7521	Sisma Y SLV	0	63.8	0	0	2.4E2	1.587
27173	7521	Sisma X SLD	62.8	0	0	0	2.4E2	1.587	27174	7521	Sisma Y SLD	0	62.8	0	0	2.4E2	1.587
27175	7522	Sisma X SLV	38.8	0	0	0	1.4E2	1.587	27176	7522	Sisma Y SLV	0	38.8	0	0	1.4E2	1.587
27177	7522	Sisma X SLD	38.1	0	0	0	1.4E2	1.587	27178	7522	Sisma Y SLD	0	38.1	0	0	1.4E2	1.587
27179	7523	Sisma X SLV	64.8	0	0	0	239.07	1.587	27180	7523	Sisma Y SLV	0	64.8	0	0	239.07	1.587
27181	7523	Sisma X SLD	63.7	0	0	0	239.07	1.587	27182	7523	Sisma Y SLD	0	63.7	0	0	239.07	1.587
27183	7524	Sisma X SLV	64.8	0	0	0	239.09	1.587	27184	7524	Sisma Y SLV	0	64.8	0	0	239.09	1.587
27185	7524	Sisma X SLD	63.7	0	0	0	239.09	1.587	27186	7524	Sisma Y SLD	0	63.7	0	0	239.09	1.587
27187	7525	Sisma X SLV	60.9	0	0	0	2.2E2	1.587	27188	7525	Sisma Y SLV	0	60.9	0	0	2.2E2	1.587
27189	7525	Sisma X SLD	59.9	0	0	0	2.2E2	1.587	27190	7525	Sisma Y SLD	0	59.9	0	0	2.2E2	1.587
27191	7526	Sisma X SLV	60.7	0	0	0	2.2E2	1.587	27192	7526	Sisma Y SLV	0	60.7	0	0	2.2E2	1.587
27193	7526	Sisma X SLD	59.7	0	0	0	2.2E2	1.587	27194	7526	Sisma Y SLD	0	59.7	0	0	2.2E2	1.587
27195	7527	Sisma X SLV	60.5	0	0	0	2.2E2	1.587	27196	7527	Sisma Y SLV	0	60.5	0	0	2.2E2	1.587
27197	7527	Sisma X SLD	59.6	0	0	0	2.2E2	1.587	27198	7527	Sisma Y SLD	0	59.6	0	0	2.2E2	1.587
27199	7528	Sisma X SLV	38.8	0	0	0	1.4E2	1.587	27200	7528	Sisma Y SLV	0	38.8	0	0	1.4E2	1.587
27201	7528	Sisma X SLD	38.2	0	0	0	1.4E2	1.587	27202	7528	Sisma Y SLD	0	38.2	0	0	1.4E2	1.587
27203	7529	Sisma X SLV	64.7	0	0	0	2.4E2	1.587	27204	7529	Sisma Y SLV	0	64.7	0	0	2.4E2	1.587
27205	7529	Sisma X SLD	63.7	0	0	0	2.4E2	1.587	27206	7529	Sisma Y SLD	0	63.7	0	0	2.4E2	1.587
27207	7530	Sisma X SLV	64.7	0	0	0	2.4E2	1.587	27208	7530	Sisma Y SLV	0	64.7	0	0	2.4E2	1.587
27209	7530	Sisma X SLD	63.7	0	0	0	2.4E2	1.587	27210	7530	Sisma Y SLD	0	63.7	0	0	2.4E2	1.587
27211	7531	Sisma X SLV	64.8	0	0	0	239.05	1.587	27212	7531	Sisma Y SLV	0	64.8	0	0	239.05	1.587
27213	7531	Sisma X SLD	63.7	0	0	0	239.05	1.587	27214	7531	Sisma Y SLD	0	63.7	0	0	239.05	1.587
27215	7532	Sisma X SLV	60.5	0	0	0	2.2E2	1.587	27216	7532	Sisma Y SLV	0	60.5	0	0	2.2E2	1.587
27217	7532	Sisma X SLD	59.6	0	0	0	2.2E2	1.587	27218	7532	Sisma Y SLD	0	59.6	0	0	2.2E2	1.587
27219	7533	Sisma X SLV	60.6	0	0	0	2.2E2	1.587	27220	7533	Sisma Y SLV	0	60.6	0	0	2.2E2	1.587
27221	7533	Sisma X SLD	59.6	0	0	0	2.2E2	1.587	27222	7533	Sisma Y SLD	0	59.6	0	0	2.2E2	1.587
27223	7534	Sisma X SLV	38.9	0	0	0	1.4E2	1.587	27224	7534	Sisma Y SLV	0	38.9	0	0	1.4E2	1.587
27225	7534	Sisma X SLD	38.3	0	0	0	1.4E2	1.587	27226	7534	Sisma Y SLD	0	38.3	0	0	1.4E2	1.587
27227	7535	Sisma X SLV	60.8	0	0	0	2.2E2	1.587	27228	7535	Sisma Y SLV	0	60.8	0	0	2.2E2	1.587
27229	7535	Sisma X SLD	59.9	0	0	0	2.2E2	1.587	27230	7535	Sisma Y SLD	0	59.9	0	0	2.2E2	1.587
27231	7536	Sisma X SLV	60.4	0	0	0	2.2E2	1.587	27232	7536	Sisma Y SLV	0	60.4	0	0	2.2E2	1.587
27233	7536	Sisma X SLD	59.4	0	0	0	2.2E2	1.587	27234	7536	Sisma Y SLD	0	59.4	0	0	2.2E2	1.587
27235	7537	Sisma X SLV	64.7	0	0	0	2.4E2	1.587	27236	7537	Sisma Y SLV	0	64.7	0	0	2.4E2	1.587
27237	7537	Sisma X SLD	63.6	0	0	0	2.4E2	1.587	27238	7537	Sisma Y SLD	0	63.6	0	0	2.4E2	1.587
27239	7538	Sisma X SLV	64.7	0	0	0	2.4E2	1.587	27240	7538	Sisma Y SLV	0	64.7	0	0	2.4E2	1.587
27241	7538	Sisma X SLD	63.6	0	0	0	2.4E2	1.587	27242	7538	Sisma Y SLD	0	63.6	0	0	2.4E2	1.587
27243	7539	Sisma X SLV	66	0	0	0	2.4E2	1.587	27244	7539	Sisma Y SLV	0	66	0	0	2.4E2	1.587
27245	7539	Sisma X SLD	65	0	0	0	2.4E2	1.587	27246	7539	Sisma Y SLD	0	65	0	0	2.4E2	1.587
27247	7540	Sisma X SLV	61.4	0	0	0	2.3E2	1.587	27248	7540	Sisma Y SLV	0	61.4	0	0	2.3E2	1.587
27249	7540	Sisma X SLD	60.5	0	0	0	2.3E2	1.587	27250	7540	Sisma Y SLD	0	60.5	0	0	2.3E2	1.587
27251	7541	Sisma X SLV	39.1	0	0	0	144.22	1.587	27252	7541	Sisma Y SLV	0	39.1	0	0	144.22	1.587
27253	7541	Sisma X SLD	38.4	0	0	0	144.22	1.587	27254	7541	Sisma Y SLD	0	38.4	0	0	144.22	1.587
27255	7542	Sisma X SLV	62.4	0	0	0	2.3E2	1.587	27256	7542	Sisma Y SLV	0	62.4	0	0	2.3E2	1.587
27257	7542	Sisma X SLD	61.4	0	0	0	2.3E2	1.587	27258	7542	Sisma Y SLD	0	61.4	0	0	2.3E2	1.587
27259	7543	Sisma X SLV	67.2	0	0	0	2.5E2	1.587	27260	7543	Sisma Y SLV	0	67.2	0	0	2.5E2	1.587
27261	7543	Sisma X SLD	66.1	0	0	0	2.5E2	1.587	27262	7543	Sisma Y SLD	0	66.1	0	0	2.5E2	1.587
27263	7544	Sisma X SLV	60.3	0	0	0	2.2E2	1.588	27264	7544	Sisma Y SLV	0	60.3	0	0	2.2E2	1.588
27265	7544	Sisma X SLD	59.3	0	0	0	2.2E2	1.588	27266	7544	Sisma Y SLD	0	59.3	0	0	2.2E2	1.588
27267	7545	Sisma X SLV	64.6	0	0	0	2.4E2	1.588	27268	7545	Sisma Y SLV	0	64.6	0	0	2.4E2	1.588
27269	7545	Sisma X SLD	63.6	0	0	0	2.4E2	1.588	27270	7545	Sisma Y SLD	0	63.6	0	0	2.4E2	1.588
27271	7546	Sisma X SLV	64.6	0	0	0	2.4E2	1.588	27272	7546	Sisma Y SLV	0	64.6	0	0	2.4E2	1.588
27273	7546	Sisma X SLD	63.6	0	0	0	2.4E2	1.588	27274	7546	Sisma Y SLD	0	63.6	0	0	2.4E2	1.588
27275	7547	Sisma X SLV	63.5	0	0	0	2.3E2	1.588	27276	7547	Sisma Y SLV	0	63.5	0	0	2.3E2	1.588
27277	7547	Sisma X SLD	62.4	0	0	0	2.3E2	1.588	27278	7547	Sisma Y SLD	0	62.4	0	0	2.3E2	1.588
27279	7548	Sisma X SLV	39.2	0	0	0	1.4E2	1.588	27280	7548	Sisma Y SLV	0	39.2	0	0	1.4E2	1.588
27281	7548	Sisma X SLD	38.6	0	0	0	1.4E2	1.588	27282	7548	Sisma Y SLD	0	38.6	0	0	1.4E2	1.588
27283	7549	Sisma X SLV	65.9	0	0	0	2.4E2	1.588	27284	7549	Sisma Y SLV	0	65.9	0	0	2.4E2	1.588
27285	7549	Sisma X SLD	64.9	0	0	0	2.4E2	1.588	27286	7549	Sisma Y SLD	0	64.9	0	0	2.4E2	1.588
27287	7550	Sisma X SLV	65.8	0	0	0	2.4E2	1.588	27288	7550	Sisma Y SLV	0	65.8	0	0	2.4E2	1.588
27289	7550	Sisma X SLD	64.8	0	0	0	2.4E2	1.588	27290	7550	Sisma Y SLD	0	64.8	0	0	2.4E2	1.588
27291	7551	Sisma X SLV	65.9	0	0	0	243.11	1.588	27292	7551	Sisma Y SLV	0	65.9	0	0	243.11	1.588
27293	7551	Sisma X SLD	64.8	0	0	0	243.11	1.588	27294	7551	Sisma Y SLD	0	64.8	0	0	243.11	1.588
27295	7552	Sisma X SLV	65.5	0	0	0	2.4E2	1.588	27296	7552	Sisma Y SLV	0	65.5	0	0	2.4E2	1.588
27297	7552	Sisma X SLD	64.5	0	0	0	2.4E2	1.588	27298	7552	Sisma Y SLD	0	64.5	0	0	2.4E2	1.588
27299	7553	Sisma X SLV	63.3	0	0	0	2.3E2	1.588	27300	7553	Sisma Y SLV	0	63.3	0	0	2.3E2	1.588
27301	7553	Sisma X SLD	62.3	0	0	0	2.3E2	1.588	27302	7553	Sisma Y SLD	0	62.3	0	0	2.3E2	1.588
27303	7554	Sisma X SLV	68.2	0	0	0	251.6	1.588	27304	7554	Sisma Y SLV	0	68.2	0	0	251.6	1.588
27305	7554	Sisma X SLD	67.1	0	0	0	251.6	1.588	27306	7554	Sisma Y SLD	0	67.1	0	0	251.6	1.588
27307	7555	Sisma X SLV	64.9	0	0	0	2.4E2	1.588	27308	7555	Sisma Y SLV	0	64.9	0	0	2.4E2	1.588
27309	7555	Sisma X SLD	63.9	0	0	0	2.4E2	1.588	27310	7555	Sisma Y SLD	0	63.9	0	0	2.4E2	1.588
27311	7556	Sisma X SLV	64.2	0	0	0	2.4E2	1.588	27312	7556	Sisma Y SLV	0	64.2	0	0	2.4E2	1.588
27313	7556	Sisma X SLD	63.2	0	0	0	2.4E2	1.588	27314	7556	Sisma Y SLD	0	63.2	0	0	2.4E2	1.588
27315	7557	Sisma X SLV	65.8	0	0	0	2.4E2	1.588	27316	7557	Sisma Y SLV	0	65.8	0	0	2.4E2	1.588
27317	7557	Sisma X SLD	64.7	0	0	0	2.4E2	1.588	27318	7557	Sisma Y SLD	0	64.7	0	0	2.4E2	1.588
27319	7558	Sisma X SLV	64.3	0	0	0	2.4E2	1.588	27320	7558	Sisma Y SLV	0	64.3	0	0	2.4E2	1.588
27321	7558	Sisma X SLD	63.3	0	0	0	2.4E2	1.588	27322	7558	Sisma Y SLD	0	63.3	0	0	2.4E2	1.588
27323	7559	Sisma X SLV	63.8	0	0	0	2.4E2	1.588	27324	7559	Sisma Y SLV	0	63.8	0	0	2.4E2	1.588
27325	7559	Sisma X SLD	62.8	0	0	0	2.4E2	1.588	27326	7559	Sisma Y SLD	0	62.8	0	0	2.4E2	1.588
27327	7560	Sisma X SLV	63.4	0	0	0	234.08	1.588	27328	7560	Sisma Y SLV	0	63.4	0	0	234.08	1.588
27329	7560	Sisma X SLD	62.4	0	0	0	234.08	1.588	27330	7560	Sisma Y SLD	0	62.4	0	0	234.08	1.588
27331	7561	Sisma X SLV	39.4	0	0	0	1.5E2	1.588	27332	7561	Sisma Y SLV	0	39.4	0	0	1.5E2	1.588
27333	7561	Sisma X SLD	38.8	0	0	0	1.5E2	1.588	27334	7561	Sisma Y SLD	0	38.8	0	0	1.5E2	1.588
27335	7562	Sisma X SLV	39.4	0	0	0	1.5E2	1.588	27336	7562	Sisma Y SLV	0	39.4	0	0	1.5E2	1.588
27337	7562	Sisma X SLD	38.8	0	0	0	1.5E2	1.588	27338	7562	Sisma Y SLD	0	38.8	0	0	1.5E2	1.588
27339	7563	Sisma X SLV	39.4	0	0	0	1.5E2	1.588	27340	7563	Sisma Y SLV	0	39.4	0	0	1.5E2	1.588
27341	7563	Sisma X SLD	38.8	0	0	0	1.5E2	1.588	27342	7563	Sisma Y SLD	0	38.8	0	0	1.5E2	1.588
27343	7564	Sisma X SLV	39.4	0	0	0	1.5E2	1.588	27344	7564	Sisma Y SLV	0	39.4	0	0	1.5E2	1.588
27345	7564	Sisma X SLD	38.8	0	0	0	1.5E2	1.588	27346	7564	Sisma Y SLD	0	38.8	0	0	1.5E2	1.588
27347	7565	Sisma X SLV	39.4	0	0	0	1.5E2	1.588	27348	7565	Sisma Y SLV	0	39.4	0	0	1.5E2	1.588
27349	7565	Sisma X SLD	38.8	0	0	0	1.5E2	1.588	27350	7565	Sisma Y SLD	0	38.8	0	0	1.5E2	1.588
27351	7566	Sisma X SLV	39.4	0	0	0	1.5E2	1.588	27352	7566	Sisma Y SLV	0	39.4	0	0	1.5E2	1.588
27353	7566	Sisma X SLD	38.8	0	0	0	1.5E2	1.588	27354	7566	Sisma Y SLD	0	38.8	0	0	1.5E2	1.588
27355	7567	Sisma X SLV	39.4	0	0	0	1.5E2	1.588	27356	7567	Sisma Y SLV	0	39.4	0	0	1.5E2	1.588
27357	7567	Sisma X SLD	38.8	0	0	0	1.5E2	1.588	27358	7567	Sisma Y SLD	0	38.8	0	0	1.5E2	1.588
27359	7568	Sisma X SLV	39.5	0	0	0	1.5E2	1.588	27360	7568	Sisma Y SLV	0	39.5	0	0	1.5E2	1.588
27361	7568	Sisma X SLD	38.8	0	0	0	1.5E2	1.588	27362	7568	Sisma Y SLD	0	38.8	0	0	1.5E2	1.588
27363	7569	Sisma X SLV	39.6	0	0	0	1.5E2	1.588	27364	7569	Sisma Y SLV	0	39.6	0	0	1.5E2	1.588

muratura

Indice	Nodo	Condizione	Fx	Fy	Fz	Mz	Peso	Gamma	Indice	Nodo	Condizione	Fx	Fy	Fz	Mz	Peso	Gamma
27365	7569	Sisma X SLD	39	0	0	0	1.5E2	1.588	27366	7569	Sisma Y SLD	0	39	0	0	1.5E2	1.588
27367	7570	Sisma X SLV	39.4	0	0	0	145.39	1.588	27368	7570	Sisma Y SLV	0	39.4	0	0	145.39	1.588
27369	7570	Sisma X SLD	38.8	0	0	0	145.39	1.588	27370	7570	Sisma Y SLD	0	38.8	0	0	145.39	1.588
27371	7571	Sisma X SLV	39.8	0	0	0	1.5E2	1.588	27372	7571	Sisma Y SLV	0	39.8	0	0	1.5E2	1.588
27373	7571	Sisma X SLD	39.1	0	0	0	1.5E2	1.588	27374	7571	Sisma Y SLD	0	39.1	0	0	1.5E2	1.588
27375	7572	Sisma X SLV	63.2	0	0	0	2.3E2	1.588	27376	7572	Sisma Y SLV	0	63.2	0	0	2.3E2	1.588
27377	7572	Sisma X SLD	62.2	0	0	0	2.3E2	1.588	27378	7572	Sisma Y SLD	0	62.2	0	0	2.3E2	1.588
27379	7573	Sisma X SLV	39.4	0	0	0	1.5E2	1.588	27380	7573	Sisma Y SLV	0	39.4	0	0	1.5E2	1.588
27381	7573	Sisma X SLD	38.8	0	0	0	1.5E2	1.588	27382	7573	Sisma Y SLD	0	38.8	0	0	1.5E2	1.588
27383	7574	Sisma X SLV	39.9	0	0	0	147.39	1.588	27384	7574	Sisma Y SLV	0	39.9	0	0	147.39	1.588
27385	7574	Sisma X SLD	39.3	0	0	0	147.39	1.588	27386	7574	Sisma Y SLD	0	39.3	0	0	147.39	1.588
27387	7575	Sisma X SLV	84.7	0	0	0	3.1E2	1.588	27388	7575	Sisma Y SLV	0	84.7	0	0	3.1E2	1.588
27389	7575	Sisma X SLD	83.4	0	0	0	3.1E2	1.588	27390	7575	Sisma Y SLD	0	83.4	0	0	3.1E2	1.588
27391	7576	Sisma X SLV	82.8	0	0	0	305.64	1.588	27392	7576	Sisma Y SLV	0	82.8	0	0	305.64	1.588
27393	7576	Sisma X SLD	81.5	0	0	0	305.64	1.588	27394	7576	Sisma Y SLD	0	81.5	0	0	305.64	1.588
27395	7577	Sisma X SLV	77.5	0	0	0	2.9E2	1.588	27396	7577	Sisma Y SLV	0	77.5	0	0	2.9E2	1.588
27397	7577	Sisma X SLD	76.3	0	0	0	2.9E2	1.588	27398	7577	Sisma Y SLD	0	76.3	0	0	2.9E2	1.588
27399	7578	Sisma X SLV	77.4	0	0	0	285.75	1.588	27400	7578	Sisma Y SLV	0	77.4	0	0	285.75	1.588
27401	7578	Sisma X SLD	76.2	0	0	0	285.75	1.588	27402	7578	Sisma Y SLD	0	76.2	0	0	285.75	1.588
27403	7579	Sisma X SLV	86.6	0	0	0	3.2E2	1.588	27404	7579	Sisma Y SLV	0	86.6	0	0	3.2E2	1.588
27405	7579	Sisma X SLD	85.2	0	0	0	3.2E2	1.588	27406	7579	Sisma Y SLD	0	85.2	0	0	3.2E2	1.588
27407	7580	Sisma X SLV	86.6	0	0	0	3.2E2	1.588	27408	7580	Sisma Y SLV	0	86.6	0	0	3.2E2	1.588
27409	7580	Sisma X SLD	85.2	0	0	0	3.2E2	1.588	27410	7580	Sisma Y SLD	0	85.2	0	0	3.2E2	1.588
27411	7581	Sisma X SLV	40.7	0	0	0	1.5E2	1.588	27412	7581	Sisma Y SLV	0	40.7	0	0	1.5E2	1.588
27413	7581	Sisma X SLD	40.1	0	0	0	1.5E2	1.588	27414	7581	Sisma Y SLD	0	40.1	0	0	1.5E2	1.588
27415	7582	Sisma X SLV	39.5	0	0	0	1.5E2	1.588	27416	7582	Sisma Y SLV	0	39.5	0	0	1.5E2	1.588
27417	7582	Sisma X SLD	38.9	0	0	0	1.5E2	1.588	27418	7582	Sisma Y SLD	0	38.9	0	0	1.5E2	1.588
27419	7583	Sisma X SLV	39.5	0	0	0	1.5E2	1.588	27420	7583	Sisma Y SLV	0	39.5	0	0	1.5E2	1.588
27421	7583	Sisma X SLD	38.8	0	0	0	1.5E2	1.588	27422	7583	Sisma Y SLD	0	38.8	0	0	1.5E2	1.588
27423	7584	Sisma X SLV	39.4	0	0	0	145.46	1.588	27424	7584	Sisma Y SLV	0	39.4	0	0	145.46	1.588
27425	7584	Sisma X SLD	38.8	0	0	0	145.46	1.588	27426	7584	Sisma Y SLD	0	38.8	0	0	145.46	1.588
27427	7585	Sisma X SLV	37.7	0	0	0	1.4E2	1.588	27428	7585	Sisma Y SLV	0	37.7	0	0	1.4E2	1.588
27429	7585	Sisma X SLD	37.1	0	0	0	1.4E2	1.588	27430	7585	Sisma Y SLD	0	37.1	0	0	1.4E2	1.588
27431	7586	Sisma X SLV	39.3	0	0	0	1.5E2	1.588	27432	7586	Sisma Y SLV	0	39.3	0	0	1.5E2	1.588
27433	7586	Sisma X SLD	38.7	0	0	0	1.5E2	1.588	27434	7586	Sisma Y SLD	0	38.7	0	0	1.5E2	1.588
27435	7587	Sisma X SLV	61.9	0	0	0	2.3E2	1.588	27436	7587	Sisma Y SLV	0	61.9	0	0	2.3E2	1.588
27437	7587	Sisma X SLD	60.9	0	0	0	2.3E2	1.588	27438	7587	Sisma Y SLD	0	60.9	0	0	2.3E2	1.588
27439	7588	Sisma X SLV	61.9	0	0	0	2.3E2	1.588	27440	7588	Sisma Y SLV	0	61.9	0	0	2.3E2	1.588
27441	7588	Sisma X SLD	60.9	0	0	0	2.3E2	1.588	27442	7588	Sisma Y SLD	0	60.9	0	0	2.3E2	1.588
27443	7589	Sisma X SLV	39.2	0	0	0	1.4E2	1.588	27444	7589	Sisma Y SLV	0	39.2	0	0	1.4E2	1.588
27445	7589	Sisma X SLD	38.5	0	0	0	1.4E2	1.588	27446	7589	Sisma Y SLD	0	38.5	0	0	1.4E2	1.588
27447	7590	Sisma X SLV	37.7	0	0	0	1.4E2	1.588	27448	7590	Sisma Y SLV	0	37.7	0	0	1.4E2	1.588
27449	7590	Sisma X SLD	37.1	0	0	0	1.4E2	1.588	27450	7590	Sisma Y SLD	0	37.1	0	0	1.4E2	1.588
27451	7591	Sisma X SLV	63.2	0	0	0	2.3E2	1.588	27452	7591	Sisma Y SLV	0	63.2	0	0	2.3E2	1.588
27453	7591	Sisma X SLD	62.2	0	0	0	2.3E2	1.588	27454	7591	Sisma Y SLD	0	62.2	0	0	2.3E2	1.588
27455	7592	Sisma X SLV	39	0	0	0	1.4E2	1.588	27456	7592	Sisma Y SLV	0	39	0	0	1.4E2	1.588
27457	7592	Sisma X SLD	38.3	0	0	0	1.4E2	1.588	27458	7592	Sisma Y SLD	0	38.3	0	0	1.4E2	1.588
27459	7593	Sisma X SLV	37.8	0	0	0	1.4E2	1.588	27460	7593	Sisma Y SLV	0	37.8	0	0	1.4E2	1.588
27461	7593	Sisma X SLD	37.2	0	0	0	1.4E2	1.588	27462	7593	Sisma Y SLD	0	37.2	0	0	1.4E2	1.588
27463	7594	Sisma X SLV	38.7	0	0	0	1.4E2	1.588	27464	7594	Sisma Y SLV	0	38.7	0	0	1.4E2	1.588
27465	7594	Sisma X SLD	38.1	0	0	0	1.4E2	1.588	27466	7594	Sisma Y SLD	0	38.1	0	0	1.4E2	1.588
27467	7595	Sisma X SLV	41.5	0	0	0	1.5E2	1.588	27468	7595	Sisma Y SLV	0	41.5	0	0	1.5E2	1.588
27469	7595	Sisma X SLD	40.8	0	0	0	1.5E2	1.588	27470	7595	Sisma Y SLD	0	40.8	0	0	1.5E2	1.588
27471	7596	Sisma X SLV	37.9	0	0	0	140.01	1.588	27472	7596	Sisma Y SLV	0	37.9	0	0	140.01	1.588
27473	7596	Sisma X SLD	37.3	0	0	0	140.01	1.588	27474	7596	Sisma Y SLD	0	37.3	0	0	140.01	1.588
27475	7597	Sisma X SLV	38.4	0	0	0	1.4E2	1.588	27476	7597	Sisma Y SLV	0	38.4	0	0	1.4E2	1.588
27477	7597	Sisma X SLD	37.8	0	0	0	1.4E2	1.588	27478	7597	Sisma Y SLD	0	37.8	0	0	1.4E2	1.588
27479	7598	Sisma X SLV	38.2	0	0	0	1.4E2	1.588	27480	7598	Sisma Y SLV	0	38.2	0	0	1.4E2	1.588
27481	7598	Sisma X SLD	37.6	0	0	0	1.4E2	1.588	27482	7598	Sisma Y SLD	0	37.6	0	0	1.4E2	1.588
27483	7599	Sisma X SLV	40.4	0	0	0	1.5E2	1.589	27484	7599	Sisma Y SLV	0	40.4	0	0	1.5E2	1.589
27485	7599	Sisma X SLD	39.8	0	0	0	1.5E2	1.589	27486	7599	Sisma Y SLD	0	39.8	0	0	1.5E2	1.589
27487	7600	Sisma X SLV	64.6	0	0	0	2.4E2	1.589	27488	7600	Sisma Y SLV	0	64.6	0	0	2.4E2	1.589
27489	7600	Sisma X SLD	63.6	0	0	0	2.4E2	1.589	27490	7600	Sisma Y SLD	0	63.6	0	0	2.4E2	1.589
27491	7601	Sisma X SLV	62.9	0	0	0	2.3E2	1.589	27492	7601	Sisma Y SLV	0	62.9	0	0	2.3E2	1.589
27493	7601	Sisma X SLD	61.9	0	0	0	2.3E2	1.589	27494	7601	Sisma Y SLD	0	61.9	0	0	2.3E2	1.589
27495	7602	Sisma X SLV	64.6	0	0	0	2.4E2	1.589	27496	7602	Sisma Y SLV	0	64.6	0	0	2.4E2	1.589
27497	7602	Sisma X SLD	63.6	0	0	0	2.4E2	1.589	27498	7602	Sisma Y SLD	0	63.6	0	0	2.4E2	1.589
27499	7603	Sisma X SLV	59	0	0	0	2.2E2	1.589	27500	7603	Sisma Y SLV	0	59	0	0	2.2E2	1.589
27501	7603	Sisma X SLD	58.1	0	0	0	2.2E2	1.589	27502	7603	Sisma Y SLD	0	58.1	0	0	2.2E2	1.589
27503	7604	Sisma X SLV	59	0	0	0	2.2E2	1.589	27504	7604	Sisma Y SLV	0	59	0	0	2.2E2	1.589
27505	7604	Sisma X SLD	58.1	0	0	0	2.2E2	1.589	27506	7604	Sisma Y SLD	0	58.1	0	0	2.2E2	1.589
27507	7605	Sisma X SLV	61.3	0	0	0	2.3E2	1.589	27508	7605	Sisma Y SLV	0	61.3	0	0	2.3E2	1.589
27509	7605	Sisma X SLD	60.4	0	0	0	2.3E2	1.589	27510	7605	Sisma Y SLD	0	60.4	0	0	2.3E2	1.589
27511	7606	Sisma X SLV	61.3	0	0	0	2.3E2	1.589	27512	7606	Sisma Y SLV	0	61.3	0	0	2.3E2	1.589
27513	7606	Sisma X SLD	60.4	0	0	0	2.3E2	1.589	27514	7606	Sisma Y SLD	0	60.4	0	0	2.3E2	1.589
27515	7607	Sisma X SLV	64.6	0	0	0	2.4E2	1.589	27516	7607	Sisma Y SLV	0	64.6	0	0	2.4E2	1.589
27517	7607	Sisma X SLD	63.5	0	0	0	2.4E2	1.589	27518	7607	Sisma Y SLD	0	63.5	0	0	2.4E2	1.589
27519	7608	Sisma X SLV	63.3	0	0	0	2.3E2	1.589	27520	7608	Sisma Y SLV	0	63.3	0	0	2.3E2	1.589
27521	7608	Sisma X SLD	62.3	0	0	0	2.3E2	1.589	27522	7608	Sisma Y SLD	0	62.3	0	0	2.3E2	1.589
27523	7609	Sisma X SLV	62.5	0	0	0	2.3E2	1.59	27524	7609	Sisma Y SLV	0	62.5	0	0	2.3E2	1.59
27525	7609	Sisma X SLD	61.5	0	0	0	2.3E2	1.59	27526	7609	Sisma Y SLD	0	61.5	0	0	2.3E2	1.59
27527	7610	Sisma X SLV	40	0	0	0	1.5E2	1.59	27528	7610	Sisma Y SLV	0	40	0	0	1.5E2	1.59
27529	7610	Sisma X SLD	39.4	0	0	0	1.5E2	1.59	27530	7610	Sisma Y SLD	0	39.4	0	0	1.5E2	1.59
27531	7611	Sisma X SLV	40.9	0	0	0	150.81	1.59	27532	7611	Sisma Y SLV	0	40.9	0	0	150.81	1.59
27533	7611	Sisma X SLD	40.3	0	0	0	150.81	1.59	27534	7611	Sisma Y SLD	0	40.3	0	0	150.81	1.59
27535	7612	Sisma X SLV	64	0	0	0	2.4E2	1.59	27536	7612	Sisma Y SLV	0	64	0	0	2.4E2	1.59
27537	7612	Sisma X SLD	63	0	0	0	2.4E2	1.59	27538	7612	Sisma Y SLD	0	63	0	0	2.4E2	1.59
27539	7613	Sisma X SLV	64	0	0	0	2.4E2	1.59	27540	7613	Sisma Y SLV	0	64	0	0	2.4E2	1.59
27541	7613	Sisma X SLD	63	0	0	0	2.4E2	1.59	27542	7613	Sisma Y SLD	0	63	0	0	2.4E2	1.59
27543	7614	Sisma X SLV	63.1	0	0	0	2.3E2	1.59	27544	7614	Sisma Y SLV	0	63.1	0	0	2.3E2	1.59
27545	7614	Sisma X SLD	62.1	0	0	0	2.3E2	1.59	27546	7614	Sisma Y SLD	0	62.1	0	0	2.3E2	1.59
27547	7615	Sisma X SLV	60.7	0	0	0	2.2E2	1.591	27548	7615	Sisma Y SLV	0	60.7	0	0	2.2E2	1.591
27549	7615	Sisma X SLD	59.7	0	0	0	2.2E2	1.591	27550	7615	Sisma Y SLD	0	59.7	0	0	2.2E2	1.591
27551	7616	Sisma X SLV	60.7	0	0	0	2.2E2	1.591	27552	7616	Sisma Y SLV	0	60.7	0	0	2.2E2	1.591
27553	7616	Sisma X SLD	59.7	0	0	0	2.2E2	1.591	27554	7616	Sisma Y SLD	0	59.7	0	0	2.2E2	1.591
27555	7617	Sisma X SLV	61.9	0	0	0	2.3E2	1.591	27556	7617	Sisma Y SLV	0	61.9	0	0	2.3E2	1.591
27557	7617	Sisma X SLD	60.9	0	0	0	2.3E2	1.591	27558	7617	Sisma Y SLD	0	60.9	0	0	2.3E2	1.591
27559	7618	Sisma X SLV	39.6	0	0	0	1.5E2	1.591	27560	7618	Sisma Y SLV	0	39.6	0	0	1.5E2	1.591
27561	7618	Sisma X SLD	39	0	0	0	1.5E2	1.591	27562	7618	Sisma Y SLD	0	39	0	0	1.5E2	1.591
27563	7619	Sisma X SLV	63.3	0	0	0	2.3E2	1.591	27564	7619	Sisma Y SLV	0	63.3	0	0	2.3E2	1.591
27565	7619	Sisma X SLD	62.3	0	0	0	2.3E2	1.591	27566	7619	Sisma Y SLD	0	62.3	0	0	2.3E2	1.591

Indice	Nodo	Condizione	Fx	Fy	Fz	Mz	Peso	Gamma	Indice	Nodo	Condizione	Fx	Fy	Fz	Mz	Peso	Gamma
27567	7620	Sisma X SLV	63.3	0	0	0	2.3E2	1.591	27568	7620	Sisma Y SLV	0	63.3	0	0	2.3E2	1.591
27569	7620	Sisma X SLD	62.3	0	0	0	2.3E2	1.591	27570	7620	Sisma Y SLD	0	62.3	0	0	2.3E2	1.591
27571	7621	Sisma X SLV	58.1	0	0	0	2.1E2	1.591	27572	7621	Sisma Y SLV	0	58.1	0	0	2.1E2	1.591
27573	7621	Sisma X SLD	57.2	0	0	0	2.1E2	1.591	27574	7621	Sisma Y SLD	0	57.2	0	0	2.1E2	1.591
27575	7622	Sisma X SLV	58.1	0	0	0	2.1E2	1.591	27576	7622	Sisma Y SLV	0	58.1	0	0	2.1E2	1.591
27577	7622	Sisma X SLD	57.2	0	0	0	2.1E2	1.591	27578	7622	Sisma Y SLD	0	57.2	0	0	2.1E2	1.591
27579	7623	Sisma X SLV	40.3	0	0	0	1.5E2	1.592	27580	7623	Sisma Y SLV	0	40.3	0	0	1.5E2	1.592
27581	7623	Sisma X SLD	39.7	0	0	0	1.5E2	1.592	27582	7623	Sisma Y SLD	0	39.7	0	0	1.5E2	1.592
27583	7624	Sisma X SLV	62.9	0	0	0	2.3E2	1.592	27584	7624	Sisma Y SLV	0	62.9	0	0	2.3E2	1.592
27585	7624	Sisma X SLD	61.9	0	0	0	2.3E2	1.592	27586	7624	Sisma Y SLD	0	61.9	0	0	2.3E2	1.592
27587	7625	Sisma X SLV	62	0	0	0	2.3E2	1.592	27588	7625	Sisma Y SLV	0	62	0	0	2.3E2	1.592
27589	7625	Sisma X SLD	61	0	0	0	2.3E2	1.592	27590	7625	Sisma Y SLD	0	61	0	0	2.3E2	1.592
27591	7626	Sisma X SLV	59.9	0	0	0	2.2E2	1.592	27592	7626	Sisma Y SLV	0	59.9	0	0	2.2E2	1.592
27593	7626	Sisma X SLD	58.9	0	0	0	2.2E2	1.592	27594	7626	Sisma Y SLD	0	58.9	0	0	2.2E2	1.592
27595	7627	Sisma X SLV	59.9	0	0	0	2.2E2	1.592	27596	7627	Sisma Y SLV	0	59.9	0	0	2.2E2	1.592
27597	7627	Sisma X SLD	58.9	0	0	0	2.2E2	1.592	27598	7627	Sisma Y SLD	0	58.9	0	0	2.2E2	1.592
27599	7628	Sisma X SLV	61.3	0	0	0	2.3E2	1.592	27600	7628	Sisma Y SLV	0	61.3	0	0	2.3E2	1.592
27601	7628	Sisma X SLD	60.3	0	0	0	2.3E2	1.592	27602	7628	Sisma Y SLD	0	60.3	0	0	2.3E2	1.592
27603	7629	Sisma X SLV	39.2	0	0	0	1.4E2	1.592	27604	7629	Sisma Y SLV	0	39.2	0	0	1.4E2	1.592
27605	7629	Sisma X SLD	38.6	0	0	0	1.4E2	1.592	27606	7629	Sisma Y SLD	0	38.6	0	0	1.4E2	1.592
27607	7630	Sisma X SLV	62.5	0	0	0	2.3E2	1.592	27608	7630	Sisma Y SLV	0	62.5	0	0	2.3E2	1.592
27609	7630	Sisma X SLD	61.5	0	0	0	2.3E2	1.592	27610	7630	Sisma Y SLD	0	61.5	0	0	2.3E2	1.592
27611	7631	Sisma X SLV	61.8	0	0	0	2.3E2	1.593	27612	7631	Sisma Y SLV	0	61.8	0	0	2.3E2	1.593
27613	7631	Sisma X SLD	60.8	0	0	0	2.3E2	1.593	27614	7631	Sisma Y SLD	0	60.8	0	0	2.3E2	1.593
27615	7632	Sisma X SLV	62.5	0	0	0	2.3E2	1.593	27616	7632	Sisma Y SLV	0	62.5	0	0	2.3E2	1.593
27617	7632	Sisma X SLD	61.5	0	0	0	2.3E2	1.593	27618	7632	Sisma Y SLD	0	61.5	0	0	2.3E2	1.593
27619	7633	Sisma X SLV	39.7	0	0	0	1.5E2	1.593	27620	7633	Sisma Y SLV	0	39.7	0	0	1.5E2	1.593
27621	7633	Sisma X SLD	39	0	0	0	1.5E2	1.593	27622	7633	Sisma Y SLD	0	39	0	0	1.5E2	1.593
27623	7634	Sisma X SLV	57.5	0	0	0	2.1E2	1.593	27624	7634	Sisma Y SLV	0	57.5	0	0	2.1E2	1.593
27625	7634	Sisma X SLD	56.6	0	0	0	2.1E2	1.593	27626	7634	Sisma Y SLD	0	56.6	0	0	2.1E2	1.593
27627	7635	Sisma X SLV	57.5	0	0	0	2.1E2	1.593	27628	7635	Sisma Y SLV	0	57.5	0	0	2.1E2	1.593
27629	7635	Sisma X SLD	56.6	0	0	0	2.1E2	1.593	27630	7635	Sisma Y SLD	0	56.6	0	0	2.1E2	1.593
27631	7636	Sisma X SLV	59	0	0	0	2.2E2	1.593	27632	7636	Sisma Y SLV	0	59	0	0	2.2E2	1.593
27633	7636	Sisma X SLD	58.1	0	0	0	2.2E2	1.593	27634	7636	Sisma Y SLD	0	58.1	0	0	2.2E2	1.593
27635	7637	Sisma X SLV	59	0	0	0	2.2E2	1.593	27636	7637	Sisma Y SLV	0	59	0	0	2.2E2	1.593
27637	7637	Sisma X SLD	58.1	0	0	0	2.2E2	1.593	27638	7637	Sisma Y SLD	0	58.1	0	0	2.2E2	1.593
27639	7638	Sisma X SLV	60.7	0	0	0	2.2E2	1.593	27640	7638	Sisma Y SLV	0	60.7	0	0	2.2E2	1.593
27641	7638	Sisma X SLD	59.8	0	0	0	2.2E2	1.593	27642	7638	Sisma Y SLD	0	59.8	0	0	2.2E2	1.593
27643	7639	Sisma X SLV	61.6	0	0	0	2.3E2	1.594	27644	7639	Sisma Y SLV	0	61.6	0	0	2.3E2	1.594
27645	7639	Sisma X SLD	60.6	0	0	0	2.3E2	1.594	27646	7639	Sisma Y SLD	0	60.6	0	0	2.3E2	1.594
27647	7640	Sisma X SLV	61.8	0	0	0	2.3E2	1.594	27648	7640	Sisma Y SLV	0	61.8	0	0	2.3E2	1.594
27649	7640	Sisma X SLD	60.8	0	0	0	2.3E2	1.594	27650	7640	Sisma Y SLD	0	60.8	0	0	2.3E2	1.594
27651	7641	Sisma X SLV	61.1	0	0	0	2.2E2	1.594	27652	7641	Sisma Y SLV	0	61.1	0	0	2.2E2	1.594
27653	7641	Sisma X SLD	60.2	0	0	0	2.2E2	1.594	27654	7641	Sisma Y SLD	0	60.2	0	0	2.2E2	1.594
27655	7642	Sisma X SLV	38.8	0	0	0	1.4E2	1.594	27656	7642	Sisma Y SLV	0	38.8	0	0	1.4E2	1.594
27657	7642	Sisma X SLD	38.2	0	0	0	1.4E2	1.594	27658	7642	Sisma Y SLD	0	38.2	0	0	1.4E2	1.594
27659	7643	Sisma X SLV	61.7	0	0	0	2.3E2	1.594	27660	7643	Sisma Y SLV	0	61.7	0	0	2.3E2	1.594
27661	7643	Sisma X SLD	60.7	0	0	0	2.3E2	1.594	27662	7643	Sisma Y SLD	0	60.7	0	0	2.3E2	1.594
27663	7644	Sisma X SLV	60.5	0	0	0	2.2E2	1.594	27664	7644	Sisma Y SLV	0	60.5	0	0	2.2E2	1.594
27665	7644	Sisma X SLD	59.5	0	0	0	2.2E2	1.594	27666	7644	Sisma Y SLD	0	59.5	0	0	2.2E2	1.594
27667	7645	Sisma X SLV	61	0	0	0	2.2E2	1.594	27668	7645	Sisma Y SLV	0	61	0	0	2.2E2	1.594
27669	7645	Sisma X SLD	60.1	0	0	0	2.2E2	1.594	27670	7645	Sisma Y SLD	0	60.1	0	0	2.2E2	1.594
27671	7646	Sisma X SLV	60.8	0	0	0	223.37	1.594	27672	7646	Sisma Y SLV	0	60.8	0	0	223.37	1.594
27673	7646	Sisma X SLD	59.8	0	0	0	223.37	1.594	27674	7646	Sisma Y SLD	0	59.8	0	0	223.37	1.594
27675	7647	Sisma X SLV	58.2	0	0	0	2.1E2	1.594	27676	7647	Sisma Y SLV	0	58.2	0	0	2.1E2	1.594
27677	7647	Sisma X SLD	57.3	0	0	0	2.1E2	1.594	27678	7647	Sisma Y SLD	0	57.3	0	0	2.1E2	1.594
27679	7648	Sisma X SLV	58.2	0	0	0	2.1E2	1.594	27680	7648	Sisma Y SLV	0	58.2	0	0	2.1E2	1.594
27681	7648	Sisma X SLD	57.3	0	0	0	2.1E2	1.594	27682	7648	Sisma Y SLD	0	57.3	0	0	2.1E2	1.594
27683	7649	Sisma X SLV	61.1	0	0	0	2.2E2	1.594	27684	7649	Sisma Y SLV	0	61.1	0	0	2.2E2	1.594
27685	7649	Sisma X SLD	60.2	0	0	0	2.2E2	1.594	27686	7649	Sisma Y SLD	0	60.2	0	0	2.2E2	1.594
27687	7650	Sisma X SLV	57.4	0	0	0	2.1E2	1.594	27688	7650	Sisma Y SLV	0	57.4	0	0	2.1E2	1.594
27689	7650	Sisma X SLD	56.5	0	0	0	2.1E2	1.594	27690	7650	Sisma Y SLD	0	56.5	0	0	2.1E2	1.594
27691	7651	Sisma X SLV	57.4	0	0	0	2.1E2	1.594	27692	7651	Sisma Y SLV	0	57.4	0	0	2.1E2	1.594
27693	7651	Sisma X SLD	56.5	0	0	0	2.1E2	1.594	27694	7651	Sisma Y SLD	0	56.5	0	0	2.1E2	1.594
27695	7652	Sisma X SLV	39.1	0	0	0	1.4E2	1.594	27696	7652	Sisma Y SLV	0	39.1	0	0	1.4E2	1.594
27697	7652	Sisma X SLD	38.5	0	0	0	1.4E2	1.594	27698	7652	Sisma Y SLD	0	38.5	0	0	1.4E2	1.594
27699	7653	Sisma X SLV	60.9	0	0	0	2.2E2	1.594	27700	7653	Sisma Y SLV	0	60.9	0	0	2.2E2	1.594
27701	7653	Sisma X SLD	59.9	0	0	0	2.2E2	1.594	27702	7653	Sisma Y SLD	0	59.9	0	0	2.2E2	1.594
27703	7654	Sisma X SLV	38.6	0	0	0	1.4E2	1.595	27704	7654	Sisma Y SLV	0	38.6	0	0	1.4E2	1.595
27705	7654	Sisma X SLD	38	0	0	0	1.4E2	1.595	27706	7654	Sisma Y SLD	0	38	0	0	1.4E2	1.595
27707	7655	Sisma X SLV	57.7	0	0	0	2.1E2	1.595	27708	7655	Sisma Y SLV	0	57.7	0	0	2.1E2	1.595
27709	7655	Sisma X SLD	56.7	0	0	0	2.1E2	1.595	27710	7655	Sisma Y SLD	0	56.7	0	0	2.1E2	1.595
27711	7656	Sisma X SLV	57.7	0	0	0	2.1E2	1.595	27712	7656	Sisma Y SLV	0	57.7	0	0	2.1E2	1.595
27713	7656	Sisma X SLD	56.7	0	0	0	2.1E2	1.595	27714	7656	Sisma Y SLD	0	56.7	0	0	2.1E2	1.595
27715	7657	Sisma X SLV	61.1	0	0	0	2.2E2	1.595	27716	7657	Sisma Y SLV	0	61.1	0	0	2.2E2	1.595
27717	7657	Sisma X SLD	60.1	0	0	0	2.2E2	1.595	27718	7657	Sisma Y SLD	0	60.1	0	0	2.2E2	1.595
27719	7658	Sisma X SLV	60.8	0	0	0	223.4	1.595	27720	7658	Sisma Y SLV	0	60.8	0	0	223.4	1.595
27721	7658	Sisma X SLD	59.8	0	0	0	223.4	1.595	27722	7658	Sisma Y SLD	0	59.8	0	0	223.4	1.595
27723	7659	Sisma X SLV	38.7	0	0	0	1.4E2	1.595	27724	7659	Sisma Y SLV	0	38.7	0	0	1.4E2	1.595
27725	7659	Sisma X SLD	38.1	0	0	0	1.4E2	1.595	27726	7659	Sisma Y SLD	0	38.1	0	0	1.4E2	1.595
27727	7660	Sisma X SLV	38.5	0	0	0	1.4E2	1.595	27728	7660	Sisma Y SLV	0	38.5	0	0	1.4E2	1.595
27729	7660	Sisma X SLD	37.9	0	0	0	1.4E2	1.595	27730	7660	Sisma Y SLD	0	37.9	0	0	1.4E2	1.595
27731	7661	Sisma X SLV	30.5	0	0	0	1.1E2	1.595	27732	7661	Sisma Y SLV	0	30.5	0	0	1.1E2	1.595
27733	7661	Sisma X SLD	30	0	0	0	1.1E2	1.595	27734	7661	Sisma Y SLD	0	30	0	0	1.1E2	1.595
27735	7662	Sisma X SLV	30.5	0	0	0	1.1E2	1.595	27736	7662	Sisma Y SLV	0	30.5	0	0	1.1E2	1.595
27737	7662	Sisma X SLD	30	0	0	0	1.1E2	1.595	27738	7662	Sisma Y SLD	0	30	0	0	1.1E2	1.595
27739	7663	Sisma X SLV	34.1	0	0	0	1.3E2	1.596	27740	7663	Sisma Y SLV	0	34.1	0	0	1.3E2	1.596
27741	7663	Sisma X SLD	33.5	0	0	0	1.3E2	1.596	27742	7663	Sisma Y SLD	0	33.5	0	0	1.3E2	1.596
27743	7664	Sisma X SLV	30.7	0	0	0	1.1E2	1.603	27744	7664	Sisma Y SLV	0	30.7	0	0	1.1E2	1.603
27745	7664	Sisma X SLD	30.2	0	0	0	1.1E2	1.603	27746	7664	Sisma Y SLD	0	30.2	0	0	1.1E2	1.603
27747	7665	Sisma X SLV	27.9	0	0	0	1.0E2	1.603	27748	7665	Sisma Y SLV	0	27.9	0	0	1.0E2	1.603
27749	7665	Sisma X SLD	27.5	0	0	0	1.0E2	1.603	27750	7665	Sisma Y SLD	0	27.5	0	0	1.0E2	1.603
27751	7666	Sisma X SLV	27.9	0	0	0	1.0E2	1.603	27752	7666	Sisma Y SLV	0	27.9	0	0	1.0E2	1.603
27753	7666	Sisma X SLD	27.5	0	0	0	1.0E2	1.603	27754	7666	Sisma Y SLD	0	27.5	0	0	1.0E2	1.603
27755	7667	Sisma X SLV	23	0	0	0	83.722	1.607	27756	7667	Sisma Y SLV	0	23	0	0	83.722	1.607
27757	7667	Sisma X SLD	22.6	0	0	0	83.722	1.607	27758	7667	Sisma Y SLD	0	22.6	0	0	83.722	1.607
27759	7668	Sisma X SLV	23	0	0	0	83.722	1.607	27760	7668	Sisma Y SLV	0	23	0	0	83.722	1.607
27761	7668	Sisma X SLD	22.6	0	0	0	83.722	1.607	27762	7668	Sisma Y SLD	0	22.6	0	0	83.722	1.607
27763	7669	Sisma X SLV	28.8	0	0	0	1.0E2	1.608	27764	7669	Sisma Y SLV	0	28.8	0	0	1.0E2	1.608
27765	7669	Sisma X SLD	28.3	0	0	0	1.0E2	1.608	27766	7669	Sisma Y SLD	0	28.3	0	0	1.0E2	1.608
27767	7670	Sisma X SLV	25.5	0	0	0	92.971	1.608	27768	7670	Sisma Y SLV	0	25.5	0	0	92.971	1.608
27769	7670	Sisma X SLD	25.1	0	0	0	92.971	1.608	27770	7670	Sisma Y SLD	0	25.1	0	0	92.971	1.608
27771	7671	Sisma X SLV	25.5	0	0	0	92.971	1.608	27772	7671	Sisma Y SLV	0	25.5	0	0	92.971	1.608
27773	7671	Sisma X SLD	25.1	0	0	0	92.971	1.608	27774	7671	Sisma Y SLD	0	25.1	0	0	92.971	1.608

Indice	Nodo	Condizione	Fx	Fy	Fz	Mz	Peso	Gamma	Indice	Nodo	Condizione	Fx	Fy	Fz	Mz	Peso	Gamma
27775	7672	Sisma X SLV	24	0	0	0	87.324	1.608	27776	7672	Sisma Y SLV	0	24	0	0	87.324	1.608
27777	7672	Sisma X SLD	23.6	0	0	0	87.324	1.608	27778	7672	Sisma Y SLD	0	23.6	0	0	87.324	1.608
27779	7673	Sisma X SLV	24	0	0	0	87.324	1.608	27780	7673	Sisma Y SLV	0	24	0	0	87.324	1.608
27781	7673	Sisma X SLD	23.6	0	0	0	87.324	1.608	27782	7673	Sisma Y SLD	0	23.6	0	0	87.324	1.608
27783	7674	Sisma X SLV	23.6	0	0	0	85.798	1.609	27784	7674	Sisma Y SLV	0	23.6	0	0	85.798	1.609
27785	7674	Sisma X SLD	23.2	0	0	0	85.798	1.609	27786	7674	Sisma Y SLD	0	23.2	0	0	85.798	1.609
27787	7675	Sisma X SLV	23.6	0	0	0	85.798	1.609	27788	7675	Sisma Y SLV	0	23.6	0	0	85.798	1.609
27789	7675	Sisma X SLD	23.2	0	0	0	85.798	1.609	27790	7675	Sisma Y SLD	0	23.2	0	0	85.798	1.609
27791	7676	Sisma X SLV	55.1	0	0	0	2.0E2	1.612	27792	7676	Sisma Y SLV	0	55.1	0	0	2.0E2	1.612
27793	7676	Sisma X SLD	54.2	0	0	0	2.0E2	1.612	27794	7676	Sisma Y SLD	0	54.2	0	0	2.0E2	1.612
27795	7677	Sisma X SLV	25.6	0	0	0	93.168	1.613	27796	7677	Sisma Y SLV	0	25.6	0	0	93.168	1.613
27797	7677	Sisma X SLD	25.2	0	0	0	93.168	1.613	27798	7677	Sisma Y SLD	0	25.2	0	0	93.168	1.613
27799	7678	Sisma X SLV	58.7	0	0	0	2.1E2	1.616	27800	7678	Sisma Y SLV	0	58.7	0	0	2.1E2	1.616
27801	7678	Sisma X SLD	57.7	0	0	0	2.1E2	1.616	27802	7678	Sisma Y SLD	0	57.7	0	0	2.1E2	1.616
27803	7679	Sisma X SLV	35.9	0	0	0	1.3E2	1.617	27804	7679	Sisma Y SLV	0	35.9	0	0	1.3E2	1.617
27805	7679	Sisma X SLD	35.4	0	0	0	1.3E2	1.617	27806	7679	Sisma Y SLD	0	35.4	0	0	1.3E2	1.617
27807	7680	Sisma X SLV	35.9	0	0	0	1.3E2	1.617	27808	7680	Sisma Y SLV	0	35.9	0	0	1.3E2	1.617
27809	7680	Sisma X SLD	35.4	0	0	0	1.3E2	1.617	27810	7680	Sisma Y SLD	0	35.4	0	0	1.3E2	1.617
27811	7681	Sisma X SLV	59.5	0	0	0	2.2E2	1.617	27812	7681	Sisma Y SLV	0	59.5	0	0	2.2E2	1.617
27813	7681	Sisma X SLD	58.5	0	0	0	2.2E2	1.617	27814	7681	Sisma Y SLD	0	58.5	0	0	2.2E2	1.617
27815	7682	Sisma X SLV	36.4	0	0	0	1.3E2	1.618	27816	7682	Sisma Y SLV	0	36.4	0	0	1.3E2	1.618
27817	7682	Sisma X SLD	35.8	0	0	0	1.3E2	1.618	27818	7682	Sisma Y SLD	0	35.8	0	0	1.3E2	1.618
27819	7683	Sisma X SLV	36.4	0	0	0	1.3E2	1.618	27820	7683	Sisma Y SLV	0	36.4	0	0	1.3E2	1.618
27821	7683	Sisma X SLD	35.8	0	0	0	1.3E2	1.618	27822	7683	Sisma Y SLD	0	35.8	0	0	1.3E2	1.618
27823	7684	Sisma X SLV	37	0	0	0	134.04	1.618	27824	7684	Sisma Y SLV	0	37	0	0	134.04	1.618
27825	7684	Sisma X SLD	36.4	0	0	0	134.04	1.618	27826	7684	Sisma Y SLD	0	36.4	0	0	134.04	1.618
27827	7685	Sisma X SLV	37	0	0	0	134.04	1.618	27828	7685	Sisma Y SLV	0	37	0	0	134.04	1.618
27829	7685	Sisma X SLD	36.4	0	0	0	134.04	1.618	27830	7685	Sisma Y SLD	0	36.4	0	0	134.04	1.618
27831	7686	Sisma X SLV	58.5	0	0	0	2.1E2	1.62	27832	7686	Sisma Y SLV	0	58.5	0	0	2.1E2	1.62
27833	7686	Sisma X SLD	57.6	0	0	0	2.1E2	1.62	27834	7686	Sisma Y SLD	0	57.6	0	0	2.1E2	1.62
27835	7687	Sisma X SLV	57.2	0	0	0	2.1E2	1.622	27836	7687	Sisma Y SLV	0	57.2	0	0	2.1E2	1.622
27837	7687	Sisma X SLD	56.3	0	0	0	2.1E2	1.622	27838	7687	Sisma Y SLD	0	56.3	0	0	2.1E2	1.622
27839	7688	Sisma X SLV	43.4	0	0	0	1.6E2	1.622	27840	7688	Sisma Y SLV	0	43.4	0	0	1.6E2	1.622
27841	7688	Sisma X SLD	42.7	0	0	0	1.6E2	1.622	27842	7688	Sisma Y SLD	0	42.7	0	0	1.6E2	1.622
27843	7689	Sisma X SLV	43.4	0	0	0	1.6E2	1.622	27844	7689	Sisma Y SLV	0	43.4	0	0	1.6E2	1.622
27845	7689	Sisma X SLD	42.7	0	0	0	1.6E2	1.622	27846	7689	Sisma Y SLD	0	42.7	0	0	1.6E2	1.622
27847	7690	Sisma X SLV	34.9	0	0	0	1.3E2	1.622	27848	7690	Sisma Y SLV	0	34.9	0	0	1.3E2	1.622
27849	7690	Sisma X SLD	34.3	0	0	0	1.3E2	1.622	27850	7690	Sisma Y SLD	0	34.3	0	0	1.3E2	1.622
27851	7691	Sisma X SLV	43	0	0	0	1.6E2	1.623	27852	7691	Sisma Y SLV	0	43	0	0	1.6E2	1.623
27853	7691	Sisma X SLD	42.3	0	0	0	1.6E2	1.623	27854	7691	Sisma Y SLD	0	42.3	0	0	1.6E2	1.623
27855	7692	Sisma X SLV	41.1	0	0	0	1.5E2	1.623	27856	7692	Sisma Y SLV	0	41.1	0	0	1.5E2	1.623
27857	7692	Sisma X SLD	40.4	0	0	0	1.5E2	1.623	27858	7692	Sisma Y SLD	0	40.4	0	0	1.5E2	1.623
27859	7693	Sisma X SLV	41.1	0	0	0	1.5E2	1.623	27860	7693	Sisma Y SLV	0	41.1	0	0	1.5E2	1.623
27861	7693	Sisma X SLD	40.4	0	0	0	1.5E2	1.623	27862	7693	Sisma Y SLD	0	40.4	0	0	1.5E2	1.623
27863	7694	Sisma X SLV	56.5	0	0	0	2.0E2	1.623	27864	7694	Sisma Y SLV	0	56.5	0	0	2.0E2	1.623
27865	7694	Sisma X SLD	55.6	0	0	0	2.0E2	1.623	27866	7694	Sisma Y SLD	0	55.6	0	0	2.0E2	1.623
27867	7695	Sisma X SLV	52.1	0	0	0	1.9E2	1.625	27868	7695	Sisma Y SLV	0	52.1	0	0	1.9E2	1.625
27869	7695	Sisma X SLD	51.2	0	0	0	1.9E2	1.625	27870	7695	Sisma Y SLD	0	51.2	0	0	1.9E2	1.625
27871	7696	Sisma X SLV	44.9	0	0	0	1.6E2	1.627	27872	7696	Sisma Y SLV	0	44.9	0	0	1.6E2	1.627
27873	7696	Sisma X SLD	44.1	0	0	0	1.6E2	1.627	27874	7696	Sisma Y SLD	0	44.1	0	0	1.6E2	1.627
27875	7697	Sisma X SLV	35.2	0	0	0	1.3E2	1.631	27876	7697	Sisma Y SLV	0	35.2	0	0	1.3E2	1.631
27877	7697	Sisma X SLD	34.6	0	0	0	1.3E2	1.631	27878	7697	Sisma Y SLD	0	34.6	0	0	1.3E2	1.631
27879	7698	Sisma X SLV	35.2	0	0	0	1.3E2	1.631	27880	7698	Sisma Y SLV	0	35.2	0	0	1.3E2	1.631
27881	7698	Sisma X SLD	34.6	0	0	0	1.3E2	1.631	27882	7698	Sisma Y SLD	0	34.6	0	0	1.3E2	1.631
27883	7699	Sisma X SLV	38.1	0	0	0	1.4E2	1.632	27884	7699	Sisma Y SLV	0	38.1	0	0	1.4E2	1.632
27885	7699	Sisma X SLD	37.5	0	0	0	1.4E2	1.632	27886	7699	Sisma Y SLD	0	37.5	0	0	1.4E2	1.632
27887	7700	Sisma X SLV	37.2	0	0	0	1.3E2	1.639	27888	7700	Sisma Y SLV	0	37.2	0	0	1.3E2	1.639
27889	7700	Sisma X SLD	36.6	0	0	0	1.3E2	1.639	27890	7700	Sisma Y SLD	0	36.6	0	0	1.3E2	1.639
27891	7701	Sisma X SLV	37.2	0	0	0	1.3E2	1.639	27892	7701	Sisma Y SLV	0	37.2	0	0	1.3E2	1.639
27893	7701	Sisma X SLD	36.6	0	0	0	1.3E2	1.639	27894	7701	Sisma Y SLD	0	36.6	0	0	1.3E2	1.639
27895	7702	Sisma X SLV	17.2	0	0	0	61.442	1.64	27896	7702	Sisma Y SLV	0	17.2	0	0	61.442	1.64
27897	7702	Sisma X SLD	16.9	0	0	0	61.442	1.64	27898	7702	Sisma Y SLD	0	16.9	0	0	61.442	1.64
27899	7703	Sisma X SLV	17.2	0	0	0	61.442	1.64	27900	7703	Sisma Y SLV	0	17.2	0	0	61.442	1.64
27901	7703	Sisma X SLD	16.9	0	0	0	61.442	1.64	27902	7703	Sisma Y SLD	0	16.9	0	0	61.442	1.64
27903	7704	Sisma X SLV	17.5	0	0	0	62.531	1.641	27904	7704	Sisma Y SLV	0	17.5	0	0	62.531	1.641
27905	7704	Sisma X SLD	17.2	0	0	0	62.531	1.641	27906	7704	Sisma Y SLD	0	17.2	0	0	62.531	1.641
27907	7705	Sisma X SLV	17.5	0	0	0	62.531	1.641	27908	7705	Sisma Y SLV	0	17.5	0	0	62.531	1.641
27909	7705	Sisma X SLD	17.2	0	0	0	62.531	1.641	27910	7705	Sisma Y SLD	0	17.2	0	0	62.531	1.641
27911	7706	Sisma X SLV	19.8	0	0	0	70.573	1.642	27912	7706	Sisma Y SLV	0	19.8	0	0	70.573	1.642
27913	7706	Sisma X SLD	19.5	0	0	0	70.573	1.642	27914	7706	Sisma Y SLD	0	19.5	0	0	70.573	1.642
27915	7707	Sisma X SLV	19.8	0	0	0	70.573	1.642	27916	7707	Sisma Y SLV	0	19.8	0	0	70.573	1.642
27917	7707	Sisma X SLD	19.5	0	0	0	70.573	1.642	27918	7707	Sisma Y SLD	0	19.5	0	0	70.573	1.642
27919	7708	Sisma X SLV	32.9	0	0	0	1.2E2	1.643	27920	7708	Sisma Y SLV	0	32.9	0	0	1.2E2	1.643
27921	7708	Sisma X SLD	32.4	0	0	0	1.2E2	1.643	27922	7708	Sisma Y SLD	0	32.4	0	0	1.2E2	1.643
27923	7709	Sisma X SLV	32.9	0	0	0	1.2E2	1.643	27924	7709	Sisma Y SLV	0	32.9	0	0	1.2E2	1.643
27925	7709	Sisma X SLD	32.4	0	0	0	1.2E2	1.643	27926	7709	Sisma Y SLD	0	32.4	0	0	1.2E2	1.643
27927	7710	Sisma X SLV	20.6	0	0	0	73.463	1.643	27928	7710	Sisma Y SLV	0	20.6	0	0	73.463	1.643
27929	7710	Sisma X SLD	20.3	0	0	0	73.463	1.643	27930	7710	Sisma Y SLD	0	20.3	0	0	73.463	1.643
27931	7711	Sisma X SLV	20.6	0	0	0	73.463	1.643	27932	7711	Sisma Y SLV	0	20.6	0	0	73.463	1.643
27933	7711	Sisma X SLD	20.3	0	0	0	73.463	1.643	27934	7711	Sisma Y SLD	0	20.3	0	0	73.463	1.643
27935	7712	Sisma X SLV	47.3	0	0	0	168.68	1.644	27936	7712	Sisma Y SLV	0	47.3	0	0	168.68	1.644
27937	7712	Sisma X SLD	46.6	0	0	0	168.68	1.644	27938	7712	Sisma Y SLD	0	46.6	0	0	168.68	1.644
27939	7713	Sisma X SLV	47.3	0	0	0	168.68	1.644	27940	7713	Sisma Y SLV	0	47.3	0	0	168.68	1.644
27941	7713	Sisma X SLD	46.6	0	0	0	168.68	1.644	27942	7713	Sisma Y SLD	0	46.6	0	0	168.68	1.644
27943	7714	Sisma X SLV	50.9	0	0	0	1.8E2	1.645	27944	7714	Sisma Y SLV	0	50.9	0	0	1.8E2	1.645
27945	7714	Sisma X SLD	50.1	0	0	0	1.8E2	1.645	27946	7714	Sisma Y SLD	0	50.1	0	0	1.8E2	1.645
27947	7715	Sisma X SLV	32.3	0	0	0	1.1E2	1.646	27948	7715	Sisma Y SLV	0	32.3	0	0	1.1E2	1.646
27949	7715	Sisma X SLD	31.8	0	0	0	1.1E2	1.646	27950	7715	Sisma Y SLD	0	31.8	0	0	1.1E2	1.646
27951	7716	Sisma X SLV	28.9	0	0	0	1.0E2	1.646	27952	7716	Sisma Y SLV	0	28.9	0	0	1.0E2	1.646
27953	7716	Sisma X SLD	28.4	0	0	0	1.0E2	1.646	27954	7716	Sisma Y SLD	0	28.4	0	0	1.0E2	1.646
27955	7717	Sisma X SLV	28.9	0	0	0	1.0E2	1.646	27956	7717	Sisma Y SLV	0	28.9	0	0	1.0E2	1.646
27957	7717	Sisma X SLD	28.4	0	0	0	1.0E2	1.646	27958	7717	Sisma Y SLD	0	28.4	0	0	1.0E2	1.646
27959	7718	Sisma X SLV	19.5	0	0	0	69.373	1.647	27960	7718	Sisma Y SLV	0	19.5	0	0	69.373	1.647
27961	7718	Sisma X SLD	19.2	0	0	0	69.373	1.647	27962	7718	Sisma Y SLD	0	19.2	0	0	69.373	1.647
27963	7719	Sisma X SLV	53.9	0	0	0	1.9E2	1.647	27964	7719	Sisma Y SLV	0	53.9	0	0	1.9E2	1.647
27965	7719	Sisma X SLD	53	0	0	0	1.9E2	1.647	27966	7719	Sisma Y SLD	0	53	0	0	1.9E2	1.647
27967	7720	Sisma X SLV	53.9	0	0	0	1.9E2	1.647	27968	7720	Sisma Y SLV	0	53.9	0	0	1.9E2	1.647
27969	7720	Sisma X SLD	53	0	0	0	1.9E2	1.647	27970	7720	Sisma Y SLD	0	53	0	0	1.9E2	1.647
27971	7721	Sisma X SLV	31	0	0	0	1.1E2	1.648	27972	7721	Sisma Y SLV	0	31	0	0	1.1E2	1.648
27973	7721	Sisma X SLD	30.5	0	0	0	1.1E2	1.648	27974	7721	Sisma Y SLD	0	30.5	0	0	1.1E2	1.648
27975	7722	Sisma X SLV	54.4	0	0	0	1.9E2	1.648	27976	7722	Sisma Y SLV	0	54.4	0	0	1.9E2	1.648

Indice	Nodo	Condizione	Fx	Fy	Fz	Mz	Peso	Gamma	Indice	Nodo	Condizione	Fx	Fy	Fz	Mz	Peso	Gamma
27977	7722	Sisma X SLD	53.5	0	0	0	1.9E2	1.648	27978	7722	Sisma Y SLD	0	53.5	0	0	1.9E2	1.648
27979	7723	Sisma X SLV	28.7	0	0	0	1.0E2	1.651	27980	7723	Sisma Y SLV	0	28.7	0	0	1.0E2	1.651
27981	7723	Sisma X SLD	28.2	0	0	0	1.0E2	1.651	27982	7723	Sisma Y SLD	0	28.2	0	0	1.0E2	1.651
27983	7724	Sisma X SLV	63.4	0	0	0	2.2E2	1.653	27984	7724	Sisma Y SLV	0	63.4	0	0	2.2E2	1.653
27985	7724	Sisma X SLD	62.4	0	0	0	2.2E2	1.653	27986	7724	Sisma Y SLD	0	62.4	0	0	2.2E2	1.653
27987	7725	Sisma X SLV	63	0	0	0	2.2E2	1.653	27988	7725	Sisma Y SLV	0	63	0	0	2.2E2	1.653
27989	7725	Sisma X SLD	62	0	0	0	2.2E2	1.653	27990	7725	Sisma Y SLD	0	62	0	0	2.2E2	1.653
27991	7726	Sisma X SLV	63	0	0	0	2.2E2	1.653	27992	7726	Sisma Y SLV	0	63	0	0	2.2E2	1.653
27993	7726	Sisma X SLD	62	0	0	0	2.2E2	1.653	27994	7726	Sisma Y SLD	0	62	0	0	2.2E2	1.653
27995	7727	Sisma X SLV	63	0	0	0	2.2E2	1.653	27996	7727	Sisma Y SLV	0	63	0	0	2.2E2	1.653
27997	7727	Sisma X SLD	62	0	0	0	2.2E2	1.653	27998	7727	Sisma Y SLD	0	62	0	0	2.2E2	1.653
27999	7728	Sisma X SLV	96.9	0	0	0	3.4E2	1.653	28000	7728	Sisma Y SLV	0	96.9	0	0	3.4E2	1.653
28001	7728	Sisma X SLD	95.4	0	0	0	3.4E2	1.653	28002	7728	Sisma Y SLD	0	95.4	0	0	3.4E2	1.653
28003	7729	Sisma X SLV	96.8	0	0	0	3.4E2	1.653	28004	7729	Sisma Y SLV	0	96.8	0	0	3.4E2	1.653
28005	7729	Sisma X SLD	95.3	0	0	0	3.4E2	1.653	28006	7729	Sisma Y SLD	0	95.3	0	0	3.4E2	1.653
28007	7730	Sisma X SLV	64.2	0	0	0	2.3E2	1.653	28008	7730	Sisma Y SLV	0	64.2	0	0	2.3E2	1.653
28009	7730	Sisma X SLD	63.1	0	0	0	2.3E2	1.653	28010	7730	Sisma Y SLD	0	63.1	0	0	2.3E2	1.653
28011	7731	Sisma X SLV	64.2	0	0	0	2.3E2	1.653	28012	7731	Sisma Y SLV	0	64.2	0	0	2.3E2	1.653
28013	7731	Sisma X SLD	63.1	0	0	0	2.3E2	1.653	28014	7731	Sisma Y SLD	0	63.1	0	0	2.3E2	1.653
28015	7732	Sisma X SLV	64.2	0	0	0	2.3E2	1.653	28016	7732	Sisma Y SLV	0	64.2	0	0	2.3E2	1.653
28017	7732	Sisma X SLD	63.1	0	0	0	2.3E2	1.653	28018	7732	Sisma Y SLD	0	63.1	0	0	2.3E2	1.653
28019	7733	Sisma X SLV	64.2	0	0	0	2.3E2	1.653	28020	7733	Sisma Y SLV	0	64.2	0	0	2.3E2	1.653
28021	7733	Sisma X SLD	63.1	0	0	0	2.3E2	1.653	28022	7733	Sisma Y SLD	0	63.1	0	0	2.3E2	1.653
28023	7734	Sisma X SLV	64.2	0	0	0	2.3E2	1.653	28024	7734	Sisma Y SLV	0	64.2	0	0	2.3E2	1.653
28025	7734	Sisma X SLD	63.1	0	0	0	2.3E2	1.653	28026	7734	Sisma Y SLD	0	63.1	0	0	2.3E2	1.653
28027	7735	Sisma X SLV	64.7	0	0	0	2.3E2	1.653	28028	7735	Sisma Y SLV	0	64.7	0	0	2.3E2	1.653
28029	7735	Sisma X SLD	63.7	0	0	0	2.3E2	1.653	28030	7735	Sisma Y SLD	0	63.7	0	0	2.3E2	1.653
28031	7736	Sisma X SLV	64.1	0	0	0	227.14	1.653	28032	7736	Sisma Y SLV	0	64.1	0	0	227.14	1.653
28033	7736	Sisma X SLD	63	0	0	0	227.14	1.653	28034	7736	Sisma Y SLD	0	63	0	0	227.14	1.653
28035	7737	Sisma X SLV	64	0	0	0	2.3E2	1.653	28036	7737	Sisma Y SLV	0	64	0	0	2.3E2	1.653
28037	7737	Sisma X SLD	63	0	0	0	2.3E2	1.653	28038	7737	Sisma Y SLD	0	63	0	0	2.3E2	1.653
28039	7738	Sisma X SLV	101.4	0	0	0	3.6E2	1.653	28040	7738	Sisma Y SLV	0	101.4	0	0	3.6E2	1.653
28041	7738	Sisma X SLD	99.8	0	0	0	3.6E2	1.653	28042	7738	Sisma Y SLD	0	99.8	0	0	3.6E2	1.653
28043	7739	Sisma X SLV	101.5	0	0	0	359.84	1.653	28044	7739	Sisma Y SLV	0	101.5	0	0	359.84	1.653
28045	7739	Sisma X SLD	99.9	0	0	0	359.84	1.653	28046	7739	Sisma Y SLD	0	99.9	0	0	359.84	1.653
28047	7740	Sisma X SLV	41.2	0	0	0	1.5E2	1.653	28048	7740	Sisma Y SLV	0	41.2	0	0	1.5E2	1.653
28049	7740	Sisma X SLD	40.6	0	0	0	1.5E2	1.653	28050	7740	Sisma Y SLD	0	40.6	0	0	1.5E2	1.653
28051	7741	Sisma X SLV	41.2	0	0	0	1.5E2	1.653	28052	7741	Sisma Y SLV	0	41.2	0	0	1.5E2	1.653
28053	7741	Sisma X SLD	40.6	0	0	0	1.5E2	1.653	28054	7741	Sisma Y SLD	0	40.6	0	0	1.5E2	1.653
28055	7742	Sisma X SLV	41.2	0	0	0	1.5E2	1.653	28056	7742	Sisma Y SLV	0	41.2	0	0	1.5E2	1.653
28057	7742	Sisma X SLD	40.6	0	0	0	1.5E2	1.653	28058	7742	Sisma Y SLD	0	40.6	0	0	1.5E2	1.653
28059	7743	Sisma X SLV	41.2	0	0	0	1.5E2	1.653	28060	7743	Sisma Y SLV	0	41.2	0	0	1.5E2	1.653
28061	7743	Sisma X SLD	40.6	0	0	0	1.5E2	1.653	28062	7743	Sisma Y SLD	0	40.6	0	0	1.5E2	1.653
28063	7744	Sisma X SLV	41.2	0	0	0	1.5E2	1.653	28064	7744	Sisma Y SLV	0	41.2	0	0	1.5E2	1.653
28065	7744	Sisma X SLD	40.6	0	0	0	1.5E2	1.653	28066	7744	Sisma Y SLD	0	40.6	0	0	1.5E2	1.653
28067	7745	Sisma X SLV	41.2	0	0	0	1.5E2	1.653	28068	7745	Sisma Y SLV	0	41.2	0	0	1.5E2	1.653
28069	7745	Sisma X SLD	40.6	0	0	0	1.5E2	1.653	28070	7745	Sisma Y SLD	0	40.6	0	0	1.5E2	1.653
28071	7746	Sisma X SLV	41.2	0	0	0	146.25	1.653	28072	7746	Sisma Y SLV	0	41.2	0	0	146.25	1.653
28073	7746	Sisma X SLD	40.6	0	0	0	146.25	1.653	28074	7746	Sisma Y SLD	0	40.6	0	0	146.25	1.653
28075	7747	Sisma X SLV	41.2	0	0	0	1.5E2	1.653	28076	7747	Sisma Y SLV	0	41.2	0	0	1.5E2	1.653
28077	7747	Sisma X SLD	40.6	0	0	0	1.5E2	1.653	28078	7747	Sisma Y SLD	0	40.6	0	0	1.5E2	1.653
28079	7748	Sisma X SLV	41.3	0	0	0	1.5E2	1.653	28080	7748	Sisma Y SLV	0	41.3	0	0	1.5E2	1.653
28081	7748	Sisma X SLD	40.6	0	0	0	1.5E2	1.653	28082	7748	Sisma Y SLD	0	40.6	0	0	1.5E2	1.653
28083	7749	Sisma X SLV	41.3	0	0	0	1.5E2	1.653	28084	7749	Sisma Y SLV	0	41.3	0	0	1.5E2	1.653
28085	7749	Sisma X SLD	40.6	0	0	0	1.5E2	1.653	28086	7749	Sisma Y SLD	0	40.6	0	0	1.5E2	1.653
28087	7750	Sisma X SLV	41.4	0	0	0	1.5E2	1.653	28088	7750	Sisma Y SLV	0	41.4	0	0	1.5E2	1.653
28089	7750	Sisma X SLD	40.7	0	0	0	1.5E2	1.653	28090	7750	Sisma Y SLD	0	40.7	0	0	1.5E2	1.653
28091	7751	Sisma X SLV	41.5	0	0	0	1.5E2	1.653	28092	7751	Sisma Y SLV	0	41.5	0	0	1.5E2	1.653
28093	7751	Sisma X SLD	40.8	0	0	0	1.5E2	1.653	28094	7751	Sisma Y SLD	0	40.8	0	0	1.5E2	1.653
28095	7752	Sisma X SLV	41.6	0	0	0	1.5E2	1.653	28096	7752	Sisma Y SLV	0	41.6	0	0	1.5E2	1.653
28097	7752	Sisma X SLD	41	0	0	0	1.5E2	1.653	28098	7752	Sisma Y SLD	0	41	0	0	1.5E2	1.653
28099	7753	Sisma X SLV	86.4	0	0	0	3.1E2	1.653	28100	7753	Sisma Y SLV	0	86.4	0	0	3.1E2	1.653
28101	7753	Sisma X SLD	85	0	0	0	3.1E2	1.653	28102	7753	Sisma Y SLD	0	85	0	0	3.1E2	1.653
28103	7754	Sisma X SLV	65.1	0	0	0	2.3E2	1.653	28104	7754	Sisma Y SLV	0	65.1	0	0	2.3E2	1.653
28105	7754	Sisma X SLD	64.1	0	0	0	2.3E2	1.653	28106	7754	Sisma Y SLD	0	64.1	0	0	2.3E2	1.653
28107	7755	Sisma X SLV	96.2	0	0	0	3.4E2	1.653	28108	7755	Sisma Y SLV	0	96.2	0	0	3.4E2	1.653
28109	7755	Sisma X SLD	94.7	0	0	0	3.4E2	1.653	28110	7755	Sisma Y SLD	0	94.7	0	0	3.4E2	1.653
28111	7756	Sisma X SLV	64.2	0	0	0	2.3E2	1.653	28112	7756	Sisma Y SLV	0	64.2	0	0	2.3E2	1.653
28113	7756	Sisma X SLD	63.1	0	0	0	2.3E2	1.653	28114	7756	Sisma Y SLD	0	63.1	0	0	2.3E2	1.653
28115	7757	Sisma X SLV	64.2	0	0	0	2.3E2	1.653	28116	7757	Sisma Y SLV	0	64.2	0	0	2.3E2	1.653
28117	7757	Sisma X SLD	63.1	0	0	0	2.3E2	1.653	28118	7757	Sisma Y SLD	0	63.1	0	0	2.3E2	1.653
28119	7758	Sisma X SLV	64.2	0	0	0	2.3E2	1.653	28120	7758	Sisma Y SLV	0	64.2	0	0	2.3E2	1.653
28121	7758	Sisma X SLD	63.1	0	0	0	2.3E2	1.653	28122	7758	Sisma Y SLD	0	63.1	0	0	2.3E2	1.653
28123	7759	Sisma X SLV	64.2	0	0	0	2.3E2	1.653	28124	7759	Sisma Y SLV	0	64.2	0	0	2.3E2	1.653
28125	7759	Sisma X SLD	63.1	0	0	0	2.3E2	1.653	28126	7759	Sisma Y SLD	0	63.1	0	0	2.3E2	1.653
28127	7760	Sisma X SLV	64.1	0	0	0	2.3E2	1.653	28128	7760	Sisma Y SLV	0	64.1	0	0	2.3E2	1.653
28129	7760	Sisma X SLD	63.1	0	0	0	2.3E2	1.653	28130	7760	Sisma Y SLD	0	63.1	0	0	2.3E2	1.653
28131	7761	Sisma X SLV	66.5	0	0	0	2.4E2	1.653	28132	7761	Sisma Y SLV	0	66.5	0	0	2.4E2	1.653
28133	7761	Sisma X SLD	65.5	0	0	0	2.4E2	1.653	28134	7761	Sisma Y SLD	0	65.5	0	0	2.4E2	1.653
28135	7762	Sisma X SLV	63	0	0	0	2.2E2	1.653	28136	7762	Sisma Y SLV	0	63	0	0	2.2E2	1.653
28137	7762	Sisma X SLD	62	0	0	0	2.2E2	1.653	28138	7762	Sisma Y SLD	0	62	0	0	2.2E2	1.653
28139	7763	Sisma X SLV	64.2	0	0	0	2.3E2	1.653	28140	7763	Sisma Y SLV	0	64.2	0	0	2.3E2	1.653
28141	7763	Sisma X SLD	63.1	0	0	0	2.3E2	1.653	28142	7763	Sisma Y SLD	0	63.1	0	0	2.3E2	1.653
28143	7764	Sisma X SLV	64.1	0	0	0	2.3E2	1.653	28144	7764	Sisma Y SLV	0	64.1	0	0	2.3E2	1.653
28145	7764	Sisma X SLD	63	0	0	0	2.3E2	1.653	28146	7764	Sisma Y SLD	0	63	0	0	2.3E2	1.653
28147	7765	Sisma X SLV	64.1	0	0	0	2.3E2	1.653	28148	7765	Sisma Y SLV	0	64.1	0	0	2.3E2	1.653
28149	7765	Sisma X SLD	63.1	0	0	0	2.3E2	1.653	28150	7765	Sisma Y SLD	0	63.1	0	0	2.3E2	1.653
28151	7766	Sisma X SLV	63.5	0	0	0	2.3E2	1.653	28152	7766	Sisma Y SLV	0	63.5	0	0	2.3E2	1.653
28153	7766	Sisma X SLD	62.5	0	0	0	2.3E2	1.653	28154	7766	Sisma Y SLD	0	62.5	0	0	2.3E2	1.653
28155	7767	Sisma X SLV	63.1	0	0	0	223.59	1.653	28156	7767	Sisma Y SLV	0	63.1	0	0	223.59	1.653
28157	7767	Sisma X SLD	62	0	0	0	223.59	1.653	28158	7767	Sisma Y SLD	0	62	0	0	223.59	1.653
28159	7768	Sisma X SLV	64.1	0	0	0	2.3E2	1.653	28160	7768	Sisma Y SLV	0	64.1	0	0	2.3E2	1.653
28161	7768	Sisma X SLD	63.1	0	0	0	2.3E2	1.653	28162	7768	Sisma Y SLD	0	63.1	0	0	2.3E2	1.653
28163	7769	Sisma X SLV	64.5	0	0	0	2.3E2	1.653	28164	7769	Sisma Y SLV	0	64.5	0	0	2.3E2	1.653
28165	7769	Sisma X SLD	63.5	0	0	0	2.3E2	1.653	28166	7769	Sisma Y SLD	0	63.5	0	0	2.3E2	1.653
28167	7770	Sisma X SLV	64.1	0	0	0	2.3E2	1.653	28168	7770	Sisma Y SLV	0	64.1	0	0	2.3E2	1.653
28169	7770	Sisma X SLD	63.1	0	0	0	2.3E2	1.653	28170	7770	Sisma Y SLD	0	63.1	0	0	2.3E2	1.653
28171	7771	Sisma X SLV	64.1	0	0	0	2.3E2	1.653	28172	7771	Sisma Y SLV	0	64.1	0	0	2.3E2	1.653
28173	7771	Sisma X SLD	63.1	0	0	0	2.3E2	1.653	28174	7771	Sisma Y SLD	0	63.1	0	0	2.3E2	1.653
28175	7772	Sisma X SLV	64.7	0	0	0	2.3E2	1.653	28176	7772	Sisma Y SLV	0	64.7	0	0	2.3E2	1.653
28177	7772	Sisma X SLD	63.7	0	0	0	2.3E2	1.653	28178	7772	Sisma Y SLD	0	63.7	0	0	2.3E2	1.653
28179	7773	Sisma X SLV	64.7	0	0	0	229.55	1.653	28180	7773	Sisma Y SLV	0	64.7	0	0	229.55	1.653
28181	7773	Sisma X SLD	63.7	0	0	0	229.55	1.653	28182	7773	Sisma Y SLD	0	63.7	0	0	229.55	1.653
28183	7774	Sisma X SLV	63.3	0	0	0	2.2E2	1.653	28184	7774	Sisma Y SLV	0	63.3	0	0	2.2E2	1.653

muratura

Indice	Nodo	Condizione	Fx	Fy	Fz	Mz	Peso	Gamma	Indice	Nodo	Condizione	Fx	Fy	Fz	Mz	Peso	Gamma
28185	7774	Sisma X SLD	62.3	0	0	0	2.2E2	1.653	28186	7774	Sisma Y SLD	0	62.3	0	0	2.2E2	1.653
28187	7775	Sisma X SLV	63.1	0	0	0	2.2E2	1.653	28188	7775	Sisma Y SLV	0	63.1	0	0	2.2E2	1.653
28189	7775	Sisma X SLD	62.1	0	0	0	2.2E2	1.653	28190	7775	Sisma Y SLD	0	62.1	0	0	2.2E2	1.653
28191	7776	Sisma X SLV	64.1	0	0	0	2.3E2	1.653	28192	7776	Sisma Y SLV	0	64.1	0	0	2.3E2	1.653
28193	7776	Sisma X SLD	63.1	0	0	0	2.3E2	1.653	28194	7776	Sisma Y SLD	0	63.1	0	0	2.3E2	1.653
28195	7777	Sisma X SLV	64.3	0	0	0	2.3E2	1.653	28196	7777	Sisma Y SLV	0	64.3	0	0	2.3E2	1.653
28197	7777	Sisma X SLD	63.3	0	0	0	2.3E2	1.653	28198	7777	Sisma Y SLD	0	63.3	0	0	2.3E2	1.653
28199	7778	Sisma X SLV	64.1	0	0	0	2.3E2	1.653	28200	7778	Sisma Y SLV	0	64.1	0	0	2.3E2	1.653
28201	7778	Sisma X SLD	63.1	0	0	0	2.3E2	1.653	28202	7778	Sisma Y SLD	0	63.1	0	0	2.3E2	1.653
28203	7779	Sisma X SLV	64.1	0	0	0	2.3E2	1.653	28204	7779	Sisma Y SLV	0	64.1	0	0	2.3E2	1.653
28205	7779	Sisma X SLD	63.1	0	0	0	2.3E2	1.653	28206	7779	Sisma Y SLD	0	63.1	0	0	2.3E2	1.653
28207	7780	Sisma X SLV	64.6	0	0	0	2.3E2	1.653	28208	7780	Sisma Y SLV	0	64.6	0	0	2.3E2	1.653
28209	7780	Sisma X SLD	63.5	0	0	0	2.3E2	1.653	28210	7780	Sisma Y SLD	0	63.5	0	0	2.3E2	1.653
28211	7781	Sisma X SLV	64.2	0	0	0	2.3E2	1.653	28212	7781	Sisma Y SLV	0	64.2	0	0	2.3E2	1.653
28213	7781	Sisma X SLD	63.2	0	0	0	2.3E2	1.653	28214	7781	Sisma Y SLD	0	63.2	0	0	2.3E2	1.653
28215	7782	Sisma X SLV	64.4	0	0	0	2.3E2	1.653	28216	7782	Sisma Y SLV	0	64.4	0	0	2.3E2	1.653
28217	7782	Sisma X SLD	63.4	0	0	0	2.3E2	1.653	28218	7782	Sisma Y SLD	0	63.4	0	0	2.3E2	1.653
28219	7783	Sisma X SLV	64.5	0	0	0	2.3E2	1.653	28220	7783	Sisma Y SLV	0	64.5	0	0	2.3E2	1.653
28221	7783	Sisma X SLD	63.5	0	0	0	2.3E2	1.653	28222	7783	Sisma Y SLD	0	63.5	0	0	2.3E2	1.653
28223	7784	Sisma X SLV	63.1	0	0	0	2.2E2	1.653	28224	7784	Sisma Y SLV	0	63.1	0	0	2.2E2	1.653
28225	7784	Sisma X SLD	62.1	0	0	0	2.2E2	1.653	28226	7784	Sisma Y SLD	0	62.1	0	0	2.2E2	1.653
28227	7785	Sisma X SLV	63	0	0	0	2.2E2	1.653	28228	7785	Sisma Y SLV	0	63	0	0	2.2E2	1.653
28229	7785	Sisma X SLD	62	0	0	0	2.2E2	1.653	28230	7785	Sisma Y SLD	0	62	0	0	2.2E2	1.653
28231	7786	Sisma X SLV	64.1	0	0	0	227.47	1.653	28232	7786	Sisma Y SLV	0	64.1	0	0	227.47	1.653
28233	7786	Sisma X SLD	63.1	0	0	0	227.47	1.653	28234	7786	Sisma Y SLD	0	63.1	0	0	227.47	1.653
28235	7787	Sisma X SLV	64.2	0	0	0	2.3E2	1.653	28236	7787	Sisma Y SLV	0	64.2	0	0	2.3E2	1.653
28237	7787	Sisma X SLD	63.1	0	0	0	2.3E2	1.653	28238	7787	Sisma Y SLD	0	63.1	0	0	2.3E2	1.653
28239	7788	Sisma X SLV	64.1	0	0	0	2.3E2	1.653	28240	7788	Sisma Y SLV	0	64.1	0	0	2.3E2	1.653
28241	7788	Sisma X SLD	63.1	0	0	0	2.3E2	1.653	28242	7788	Sisma Y SLD	0	63.1	0	0	2.3E2	1.653
28243	7789	Sisma X SLV	64.3	0	0	0	227.9	1.653	28244	7789	Sisma Y SLV	0	64.3	0	0	227.9	1.653
28245	7789	Sisma X SLD	63.2	0	0	0	227.9	1.653	28246	7789	Sisma Y SLD	0	63.2	0	0	227.9	1.653
28247	7790	Sisma X SLV	64.2	0	0	0	2.3E2	1.653	28248	7790	Sisma Y SLV	0	64.2	0	0	2.3E2	1.653
28249	7790	Sisma X SLD	63.2	0	0	0	2.3E2	1.653	28250	7790	Sisma Y SLD	0	63.2	0	0	2.3E2	1.653
28251	7791	Sisma X SLV	64.3	0	0	0	2.3E2	1.653	28252	7791	Sisma Y SLV	0	64.3	0	0	2.3E2	1.653
28253	7791	Sisma X SLD	63.3	0	0	0	2.3E2	1.653	28254	7791	Sisma Y SLD	0	63.3	0	0	2.3E2	1.653
28255	7792	Sisma X SLV	64.1	0	0	0	2.3E2	1.653	28256	7792	Sisma Y SLV	0	64.1	0	0	2.3E2	1.653
28257	7792	Sisma X SLD	63.1	0	0	0	2.3E2	1.653	28258	7792	Sisma Y SLD	0	63.1	0	0	2.3E2	1.653
28259	7793	Sisma X SLV	64.1	0	0	0	2.3E2	1.653	28260	7793	Sisma Y SLV	0	64.1	0	0	2.3E2	1.653
28261	7793	Sisma X SLD	63	0	0	0	2.3E2	1.653	28262	7793	Sisma Y SLD	0	63	0	0	2.3E2	1.653
28263	7794	Sisma X SLV	63	0	0	0	2.2E2	1.653	28264	7794	Sisma Y SLV	0	63	0	0	2.2E2	1.653
28265	7794	Sisma X SLD	62	0	0	0	2.2E2	1.653	28266	7794	Sisma Y SLD	0	62	0	0	2.2E2	1.653
28267	7795	Sisma X SLV	63	0	0	0	2.2E2	1.653	28268	7795	Sisma Y SLV	0	63	0	0	2.2E2	1.653
28269	7795	Sisma X SLD	62	0	0	0	2.2E2	1.653	28270	7795	Sisma Y SLD	0	62	0	0	2.2E2	1.653
28271	7796	Sisma X SLV	63	0	0	0	2.2E2	1.653	28272	7796	Sisma Y SLV	0	63	0	0	2.2E2	1.653
28273	7796	Sisma X SLD	62	0	0	0	2.2E2	1.653	28274	7796	Sisma Y SLD	0	62	0	0	2.2E2	1.653
28275	7797	Sisma X SLV	40.5	0	0	0	1.4E2	1.653	28276	7797	Sisma Y SLV	0	40.5	0	0	1.4E2	1.653
28277	7797	Sisma X SLD	39.8	0	0	0	1.4E2	1.653	28278	7797	Sisma Y SLD	0	39.8	0	0	1.4E2	1.653
28279	7798	Sisma X SLV	68.2	0	0	0	2.4E2	1.653	28280	7798	Sisma Y SLV	0	68.2	0	0	2.4E2	1.653
28281	7798	Sisma X SLD	67.1	0	0	0	2.4E2	1.653	28282	7798	Sisma Y SLD	0	67.1	0	0	2.4E2	1.653
28283	7799	Sisma X SLV	68.2	0	0	0	2.4E2	1.653	28284	7799	Sisma Y SLV	0	68.2	0	0	2.4E2	1.653
28285	7799	Sisma X SLD	67.1	0	0	0	2.4E2	1.653	28286	7799	Sisma Y SLD	0	67.1	0	0	2.4E2	1.653
28287	7800	Sisma X SLV	67.1	0	0	0	2.4E2	1.653	28288	7800	Sisma Y SLV	0	67.1	0	0	2.4E2	1.653
28289	7800	Sisma X SLD	66	0	0	0	2.4E2	1.653	28290	7800	Sisma Y SLD	0	66	0	0	2.4E2	1.653
28291	7801	Sisma X SLV	40.5	0	0	0	1.4E2	1.653	28292	7801	Sisma Y SLV	0	40.5	0	0	1.4E2	1.653
28293	7801	Sisma X SLD	39.8	0	0	0	1.4E2	1.653	28294	7801	Sisma Y SLD	0	39.8	0	0	1.4E2	1.653
28295	7802	Sisma X SLV	62	0	0	0	2.2E2	1.653	28296	7802	Sisma Y SLV	0	62	0	0	2.2E2	1.653
28297	7802	Sisma X SLD	61	0	0	0	2.2E2	1.653	28298	7802	Sisma Y SLD	0	61	0	0	2.2E2	1.653
28299	7803	Sisma X SLV	63.3	0	0	0	2.2E2	1.653	28300	7803	Sisma Y SLV	0	63.3	0	0	2.2E2	1.653
28301	7803	Sisma X SLD	62.3	0	0	0	2.2E2	1.653	28302	7803	Sisma Y SLD	0	62.3	0	0	2.2E2	1.653
28303	7804	Sisma X SLV	68	0	0	0	2.4E2	1.653	28304	7804	Sisma Y SLV	0	68	0	0	2.4E2	1.653
28305	7804	Sisma X SLD	66.9	0	0	0	2.4E2	1.653	28306	7804	Sisma Y SLD	0	66.9	0	0	2.4E2	1.653
28307	7805	Sisma X SLV	67.9	0	0	0	2.4E2	1.653	28308	7805	Sisma Y SLV	0	67.9	0	0	2.4E2	1.653
28309	7805	Sisma X SLD	66.9	0	0	0	2.4E2	1.653	28310	7805	Sisma Y SLD	0	66.9	0	0	2.4E2	1.653
28311	7806	Sisma X SLV	66.9	0	0	0	2.4E2	1.653	28312	7806	Sisma Y SLV	0	66.9	0	0	2.4E2	1.653
28313	7806	Sisma X SLD	65.8	0	0	0	2.4E2	1.653	28314	7806	Sisma Y SLD	0	65.8	0	0	2.4E2	1.653
28315	7807	Sisma X SLV	40.5	0	0	0	1.4E2	1.653	28316	7807	Sisma Y SLV	0	40.5	0	0	1.4E2	1.653
28317	7807	Sisma X SLD	39.8	0	0	0	1.4E2	1.653	28318	7807	Sisma Y SLD	0	39.8	0	0	1.4E2	1.653
28319	7808	Sisma X SLV	66.5	0	0	0	2.4E2	1.653	28320	7808	Sisma Y SLV	0	66.5	0	0	2.4E2	1.653
28321	7808	Sisma X SLD	65.4	0	0	0	2.4E2	1.653	28322	7808	Sisma Y SLD	0	65.4	0	0	2.4E2	1.653
28323	7809	Sisma X SLV	40.4	0	0	0	1.4E2	1.653	28324	7809	Sisma Y SLV	0	40.4	0	0	1.4E2	1.653
28325	7809	Sisma X SLD	39.8	0	0	0	1.4E2	1.653	28326	7809	Sisma Y SLD	0	39.8	0	0	1.4E2	1.653
28327	7810	Sisma X SLV	62.3	0	0	0	2.2E2	1.653	28328	7810	Sisma Y SLV	0	62.3	0	0	2.2E2	1.653
28329	7810	Sisma X SLD	61.3	0	0	0	2.2E2	1.653	28330	7810	Sisma Y SLD	0	61.3	0	0	2.2E2	1.653
28331	7811	Sisma X SLV	67.7	0	0	0	2.4E2	1.653	28332	7811	Sisma Y SLV	0	67.7	0	0	2.4E2	1.653
28333	7811	Sisma X SLD	66.7	0	0	0	2.4E2	1.653	28334	7811	Sisma Y SLD	0	66.7	0	0	2.4E2	1.653
28335	7812	Sisma X SLV	67.7	0	0	0	2.4E2	1.653	28336	7812	Sisma Y SLV	0	67.7	0	0	2.4E2	1.653
28337	7812	Sisma X SLD	66.7	0	0	0	2.4E2	1.653	28338	7812	Sisma Y SLD	0	66.7	0	0	2.4E2	1.653
28339	7813	Sisma X SLV	66.7	0	0	0	2.4E2	1.653	28340	7813	Sisma Y SLV	0	66.7	0	0	2.4E2	1.653
28341	7813	Sisma X SLD	65.7	0	0	0	2.4E2	1.653	28342	7813	Sisma Y SLD	0	65.7	0	0	2.4E2	1.653
28343	7814	Sisma X SLV	63.3	0	0	0	2.2E2	1.653	28344	7814	Sisma Y SLV	0	63.3	0	0	2.2E2	1.653
28345	7814	Sisma X SLD	62.3	0	0	0	2.2E2	1.653	28346	7814	Sisma Y SLD	0	62.3	0	0	2.2E2	1.653
28347	7815	Sisma X SLV	40.4	0	0	0	1.4E2	1.653	28348	7815	Sisma Y SLV	0	40.4	0	0	1.4E2	1.653
28349	7815	Sisma X SLD	39.8	0	0	0	1.4E2	1.653	28350	7815	Sisma Y SLD	0	39.8	0	0	1.4E2	1.653
28351	7816	Sisma X SLV	67.6	0	0	0	2.4E2	1.653	28352	7816	Sisma Y SLV	0	67.6	0	0	2.4E2	1.653
28353	7816	Sisma X SLD	66.5	0	0	0	2.4E2	1.653	28354	7816	Sisma Y SLD	0	66.5	0	0	2.4E2	1.653
28355	7817	Sisma X SLV	67.6	0	0	0	2.4E2	1.653	28356	7817	Sisma Y SLV	0	67.6	0	0	2.4E2	1.653
28357	7817	Sisma X SLD	66.5	0	0	0	2.4E2	1.653	28358	7817	Sisma Y SLD	0	66.5	0	0	2.4E2	1.653
28359	7818	Sisma X SLV	62.7	0	0	0	2.2E2	1.653	28360	7818	Sisma Y SLV	0	62.7	0	0	2.2E2	1.653
28361	7818	Sisma X SLD	61.7	0	0	0	2.2E2	1.653	28362	7818	Sisma Y SLD	0	61.7	0	0	2.2E2	1.653
28363	7819	Sisma X SLV	66.6	0	0	0	2.4E2	1.653	28364	7819	Sisma Y SLV	0	66.6	0	0	2.4E2	1.653
28365	7819	Sisma X SLD	65.6	0	0	0	2.4E2	1.653	28366	7819	Sisma Y SLD	0	65.6	0	0	2.4E2	1.653
28367	7820	Sisma X SLV	40.4	0	0	0	1.4E2	1.653	28368	7820	Sisma Y SLV	0	40.4	0	0	1.4E2	1.653
28369	7820	Sisma X SLD	39.8	0	0	0	1.4E2	1.653	28370	7820	Sisma Y SLD	0	39.8	0	0	1.4E2	1.653
28371	7821	Sisma X SLV	63.3	0	0	0	224.45	1.653	28372	7821	Sisma Y SLV	0	63.3	0	0	224.45	1.653
28373	7821	Sisma X SLD	62.3	0	0	0	224.45	1.653	28374	7821	Sisma Y SLD	0	62.3	0	0	224.45	1.653
28375	7822	Sisma X SLV	67.5	0	0	0	2.4E2	1.653	28376	7822	Sisma Y SLV	0	67.5	0	0	2.4E2	1.653
28377	7822	Sisma X SLD	66.5	0	0	0	2.4E2	1.653	28378	7822	Sisma Y SLD	0	66.5	0	0	2.4E2	1.653
28379	7823	Sisma X SLV	67.5	0	0	0	2.4E2	1.653	28380	7823	Sisma Y SLV	0	67.5	0	0	2.4E2	1.653
28381	7823	Sisma X SLD	66.5	0	0	0	2.4E2	1.653	28382	7823	Sisma Y SLD	0	66.5	0	0	2.4E2	1.653
28383	7824	Sisma X SLV	63.2	0	0	0	2.2E2	1.653	28384	7824	Sisma Y SLV	0	63.2	0	0	2.2E2	1.653
28385	7824	Sisma X SLD	62.2	0	0	0	2.2E2	1.653	28386	7824	Sisma Y SLD	0	62.2	0	0	2.2E2	1.653

Indice	Nodo	Condizione	Fx	Fy	Fz	Mz	Peso	Gamma	Indice	Nodo	Condizione	Fx	Fy	Fz	Mz	Peso	Gamma
28387	7825	Sisma X SLV	40.4	0	0	0	1.4E2	1.653	28388	7825	Sisma Y SLV	0	40.4	0	0	1.4E2	1.653
28389	7825	Sisma X SLD	39.8	0	0	0	1.4E2	1.653	28390	7825	Sisma Y SLD	0	39.8	0	0	1.4E2	1.653
28391	7826	Sisma X SLV	66.7	0	0	0	2.4E2	1.653	28392	7826	Sisma Y SLV	0	66.7	0	0	2.4E2	1.653
28393	7826	Sisma X SLD	65.6	0	0	0	2.4E2	1.653	28394	7826	Sisma Y SLD	0	65.6	0	0	2.4E2	1.653
28395	7827	Sisma X SLV	66.4	0	0	0	2.4E2	1.653	28396	7827	Sisma Y SLV	0	66.4	0	0	2.4E2	1.653
28397	7827	Sisma X SLD	65.3	0	0	0	2.4E2	1.653	28398	7827	Sisma Y SLD	0	65.3	0	0	2.4E2	1.653
28399	7828	Sisma X SLV	63.4	0	0	0	2.2E2	1.653	28400	7828	Sisma Y SLV	0	63.4	0	0	2.2E2	1.653
28401	7828	Sisma X SLD	62.4	0	0	0	2.2E2	1.653	28402	7828	Sisma Y SLD	0	62.4	0	0	2.2E2	1.653
28403	7829	Sisma X SLV	67.5	0	0	0	2.4E2	1.653	28404	7829	Sisma Y SLV	0	67.5	0	0	2.4E2	1.653
28405	7829	Sisma X SLD	66.4	0	0	0	2.4E2	1.653	28406	7829	Sisma Y SLD	0	66.4	0	0	2.4E2	1.653
28407	7830	Sisma X SLV	67.5	0	0	0	2.4E2	1.653	28408	7830	Sisma Y SLV	0	67.5	0	0	2.4E2	1.653
28409	7830	Sisma X SLD	66.4	0	0	0	2.4E2	1.653	28410	7830	Sisma Y SLD	0	66.4	0	0	2.4E2	1.653
28411	7831	Sisma X SLV	63.3	0	0	0	2.2E2	1.653	28412	7831	Sisma Y SLV	0	63.3	0	0	2.2E2	1.653
28413	7831	Sisma X SLD	62.3	0	0	0	2.2E2	1.653	28414	7831	Sisma Y SLD	0	62.3	0	0	2.2E2	1.653
28415	7832	Sisma X SLV	40.4	0	0	0	1.4E2	1.653	28416	7832	Sisma Y SLV	0	40.4	0	0	1.4E2	1.653
28417	7832	Sisma X SLD	39.8	0	0	0	1.4E2	1.653	28418	7832	Sisma Y SLD	0	39.8	0	0	1.4E2	1.653
28419	7833	Sisma X SLV	63.5	0	0	0	2.3E2	1.653	28420	7833	Sisma Y SLV	0	63.5	0	0	2.3E2	1.653
28421	7833	Sisma X SLD	62.5	0	0	0	2.3E2	1.653	28422	7833	Sisma Y SLD	0	62.5	0	0	2.3E2	1.653
28423	7834	Sisma X SLV	63.5	0	0	0	2.2E2	1.653	28424	7834	Sisma Y SLV	0	63.5	0	0	2.2E2	1.653
28425	7834	Sisma X SLD	62.4	0	0	0	2.2E2	1.653	28426	7834	Sisma Y SLD	0	62.4	0	0	2.2E2	1.653
28427	7835	Sisma X SLV	63.3	0	0	0	224.55	1.653	28428	7835	Sisma Y SLV	0	63.3	0	0	224.55	1.653
28429	7835	Sisma X SLD	62.3	0	0	0	224.55	1.653	28430	7835	Sisma Y SLD	0	62.3	0	0	224.55	1.653
28431	7836	Sisma X SLV	67	0	0	0	2.4E2	1.653	28432	7836	Sisma Y SLV	0	67	0	0	2.4E2	1.653
28433	7836	Sisma X SLD	65.9	0	0	0	2.4E2	1.653	28434	7836	Sisma Y SLD	0	65.9	0	0	2.4E2	1.653
28435	7837	Sisma X SLV	67.5	0	0	0	239.17	1.653	28436	7837	Sisma Y SLV	0	67.5	0	0	239.17	1.653
28437	7837	Sisma X SLD	66.4	0	0	0	239.17	1.653	28438	7837	Sisma Y SLD	0	66.4	0	0	239.17	1.653
28439	7838	Sisma X SLV	67.5	0	0	0	239.19	1.653	28440	7838	Sisma Y SLV	0	67.5	0	0	239.19	1.653
28441	7838	Sisma X SLD	66.4	0	0	0	239.19	1.653	28442	7838	Sisma Y SLD	0	66.4	0	0	239.19	1.653
28443	7839	Sisma X SLV	40.4	0	0	0	1.4E2	1.653	28444	7839	Sisma Y SLV	0	40.4	0	0	1.4E2	1.653
28445	7839	Sisma X SLD	39.8	0	0	0	1.4E2	1.653	28446	7839	Sisma Y SLD	0	39.8	0	0	1.4E2	1.653
28447	7840	Sisma X SLV	63.4	0	0	0	224.69	1.653	28448	7840	Sisma Y SLV	0	63.4	0	0	224.69	1.653
28449	7840	Sisma X SLD	62.4	0	0	0	224.69	1.653	28450	7840	Sisma Y SLD	0	62.4	0	0	224.69	1.653
28451	7841	Sisma X SLV	63.2	0	0	0	2.2E2	1.653	28452	7841	Sisma Y SLV	0	63.2	0	0	2.2E2	1.653
28453	7841	Sisma X SLD	62.2	0	0	0	2.2E2	1.653	28454	7841	Sisma Y SLD	0	62.2	0	0	2.2E2	1.653
28455	7842	Sisma X SLV	63.1	0	0	0	2.2E2	1.653	28456	7842	Sisma Y SLV	0	63.1	0	0	2.2E2	1.653
28457	7842	Sisma X SLD	62.1	0	0	0	2.2E2	1.653	28458	7842	Sisma Y SLD	0	62.1	0	0	2.2E2	1.653
28459	7843	Sisma X SLV	40.4	0	0	0	1.4E2	1.653	28460	7843	Sisma Y SLV	0	40.4	0	0	1.4E2	1.653
28461	7843	Sisma X SLD	39.8	0	0	0	1.4E2	1.653	28462	7843	Sisma Y SLD	0	39.8	0	0	1.4E2	1.653
28463	7844	Sisma X SLV	63.5	0	0	0	2.2E2	1.653	28464	7844	Sisma Y SLV	0	63.5	0	0	2.2E2	1.653
28465	7844	Sisma X SLD	62.4	0	0	0	2.2E2	1.653	28466	7844	Sisma Y SLD	0	62.4	0	0	2.2E2	1.653
28467	7845	Sisma X SLV	67.6	0	0	0	2.4E2	1.653	28468	7845	Sisma Y SLV	0	67.6	0	0	2.4E2	1.653
28469	7845	Sisma X SLD	66.5	0	0	0	2.4E2	1.653	28470	7845	Sisma Y SLD	0	66.5	0	0	2.4E2	1.653
28471	7846	Sisma X SLV	67.4	0	0	0	2.4E2	1.653	28472	7846	Sisma Y SLV	0	67.4	0	0	2.4E2	1.653
28473	7846	Sisma X SLD	66.4	0	0	0	2.4E2	1.653	28474	7846	Sisma Y SLD	0	66.4	0	0	2.4E2	1.653
28475	7847	Sisma X SLV	67.4	0	0	0	2.4E2	1.653	28476	7847	Sisma Y SLV	0	67.4	0	0	2.4E2	1.653
28477	7847	Sisma X SLD	66.4	0	0	0	2.4E2	1.653	28478	7847	Sisma Y SLD	0	66.4	0	0	2.4E2	1.653
28479	7848	Sisma X SLV	63	0	0	0	2.2E2	1.653	28480	7848	Sisma Y SLV	0	63	0	0	2.2E2	1.653
28481	7848	Sisma X SLD	62	0	0	0	2.2E2	1.653	28482	7848	Sisma Y SLD	0	62	0	0	2.2E2	1.653
28483	7849	Sisma X SLV	63.7	0	0	0	225.65	1.653	28484	7849	Sisma Y SLV	0	63.7	0	0	225.65	1.653
28485	7849	Sisma X SLD	62.6	0	0	0	225.65	1.653	28486	7849	Sisma Y SLD	0	62.6	0	0	225.65	1.653
28487	7850	Sisma X SLV	40.5	0	0	0	1.4E2	1.653	28488	7850	Sisma Y SLV	0	40.5	0	0	1.4E2	1.653
28489	7850	Sisma X SLD	39.8	0	0	0	1.4E2	1.653	28490	7850	Sisma Y SLD	0	39.8	0	0	1.4E2	1.653
28491	7851	Sisma X SLV	68.3	0	0	0	2.4E2	1.653	28492	7851	Sisma Y SLV	0	68.3	0	0	2.4E2	1.653
28493	7851	Sisma X SLD	67.2	0	0	0	2.4E2	1.653	28494	7851	Sisma Y SLD	0	67.2	0	0	2.4E2	1.653
28495	7852	Sisma X SLV	64	0	0	0	2.3E2	1.653	28496	7852	Sisma Y SLV	0	64	0	0	2.3E2	1.653
28497	7852	Sisma X SLD	63	0	0	0	2.3E2	1.653	28498	7852	Sisma Y SLD	0	63	0	0	2.3E2	1.653
28499	7853	Sisma X SLV	67.4	0	0	0	2.4E2	1.653	28500	7853	Sisma Y SLV	0	67.4	0	0	2.4E2	1.653
28501	7853	Sisma X SLD	66.3	0	0	0	2.4E2	1.653	28502	7853	Sisma Y SLD	0	66.3	0	0	2.4E2	1.653
28503	7854	Sisma X SLV	67.4	0	0	0	2.4E2	1.653	28504	7854	Sisma Y SLV	0	67.4	0	0	2.4E2	1.653
28505	7854	Sisma X SLD	66.3	0	0	0	2.4E2	1.653	28506	7854	Sisma Y SLD	0	66.3	0	0	2.4E2	1.653
28507	7855	Sisma X SLV	62.9	0	0	0	2.2E2	1.653	28508	7855	Sisma Y SLV	0	62.9	0	0	2.2E2	1.653
28509	7855	Sisma X SLD	61.9	0	0	0	2.2E2	1.653	28510	7855	Sisma Y SLD	0	61.9	0	0	2.2E2	1.653
28511	7856	Sisma X SLV	40.6	0	0	0	1.4E2	1.653	28512	7856	Sisma Y SLV	0	40.6	0	0	1.4E2	1.653
28513	7856	Sisma X SLD	39.9	0	0	0	1.4E2	1.653	28514	7856	Sisma Y SLD	0	39.9	0	0	1.4E2	1.653
28515	7857	Sisma X SLV	64.6	0	0	0	2.3E2	1.653	28516	7857	Sisma Y SLV	0	64.6	0	0	2.3E2	1.653
28517	7857	Sisma X SLD	63.6	0	0	0	2.3E2	1.653	28518	7857	Sisma Y SLD	0	63.6	0	0	2.3E2	1.653
28519	7858	Sisma X SLV	66.3	0	0	0	2.3E2	1.653	28520	7858	Sisma Y SLV	0	66.3	0	0	2.3E2	1.653
28521	7858	Sisma X SLD	65.2	0	0	0	2.3E2	1.653	28522	7858	Sisma Y SLD	0	65.2	0	0	2.3E2	1.653
28523	7859	Sisma X SLV	69	0	0	0	2.4E2	1.653	28524	7859	Sisma Y SLV	0	69	0	0	2.4E2	1.653
28525	7859	Sisma X SLD	67.9	0	0	0	2.4E2	1.653	28526	7859	Sisma Y SLD	0	67.9	0	0	2.4E2	1.653
28527	7860	Sisma X SLV	42.6	0	0	0	1.5E2	1.653	28528	7860	Sisma Y SLV	0	42.6	0	0	1.5E2	1.653
28529	7860	Sisma X SLD	41.9	0	0	0	1.5E2	1.653	28530	7860	Sisma Y SLD	0	41.9	0	0	1.5E2	1.653
28531	7861	Sisma X SLV	65.2	0	0	0	2.3E2	1.653	28532	7861	Sisma Y SLV	0	65.2	0	0	2.3E2	1.653
28533	7861	Sisma X SLD	64.1	0	0	0	2.3E2	1.653	28534	7861	Sisma Y SLD	0	64.1	0	0	2.3E2	1.653
28535	7862	Sisma X SLV	67.4	0	0	0	2.4E2	1.653	28536	7862	Sisma Y SLV	0	67.4	0	0	2.4E2	1.653
28537	7862	Sisma X SLD	66.3	0	0	0	2.4E2	1.653	28538	7862	Sisma Y SLD	0	66.3	0	0	2.4E2	1.653
28539	7863	Sisma X SLV	67.4	0	0	0	2.4E2	1.653	28540	7863	Sisma Y SLV	0	67.4	0	0	2.4E2	1.653
28541	7863	Sisma X SLD	66.3	0	0	0	2.4E2	1.653	28542	7863	Sisma Y SLD	0	66.3	0	0	2.4E2	1.653
28543	7864	Sisma X SLV	62.8	0	0	0	2.2E2	1.653	28544	7864	Sisma Y SLV	0	62.8	0	0	2.2E2	1.653
28545	7864	Sisma X SLD	61.8	0	0	0	2.2E2	1.653	28546	7864	Sisma Y SLD	0	61.8	0	0	2.2E2	1.653
28547	7865	Sisma X SLV	40.7	0	0	0	1.4E2	1.653	28548	7865	Sisma Y SLV	0	40.7	0	0	1.4E2	1.653
28549	7865	Sisma X SLD	40.1	0	0	0	1.4E2	1.653	28550	7865	Sisma Y SLD	0	40.1	0	0	1.4E2	1.653
28551	7866	Sisma X SLV	69.5	0	0	0	2.5E2	1.653	28552	7866	Sisma Y SLV	0	69.5	0	0	2.5E2	1.653
28553	7866	Sisma X SLD	68.4	0	0	0	2.5E2	1.653	28554	7866	Sisma Y SLD	0	68.4	0	0	2.5E2	1.653
28555	7867	Sisma X SLV	68.2	0	0	0	2.4E2	1.653	28556	7867	Sisma Y SLV	0	68.2	0	0	2.4E2	1.653
28557	7867	Sisma X SLD	67.1	0	0	0	2.4E2	1.653	28558	7867	Sisma Y SLD	0	67.1	0	0	2.4E2	1.653
28559	7868	Sisma X SLV	68.1	0	0	0	2.4E2	1.653	28560	7868	Sisma Y SLV	0	68.1	0	0	2.4E2	1.653
28561	7868	Sisma X SLD	67	0	0	0	2.4E2	1.653	28562	7868	Sisma Y SLD	0	67	0	0	2.4E2	1.653
28563	7869	Sisma X SLV	67.9	0	0	0	2.4E2	1.653	28564	7869	Sisma Y SLV	0	67.9	0	0	2.4E2	1.653
28565	7869	Sisma X SLD	66.8	0	0	0	2.4E2	1.653	28566	7869	Sisma Y SLD	0	66.8	0	0	2.4E2	1.653
28567	7870	Sisma X SLV	68.2	0	0	0	2.4E2	1.653	28568	7870	Sisma Y SLV	0	68.2	0	0	2.4E2	1.653
28569	7870	Sisma X SLD	67.1	0	0	0	2.4E2	1.653	28570	7870	Sisma Y SLD	0	67.1	0	0	2.4E2	1.653
28571	7871	Sisma X SLV	65.6	0	0	0	2.3E2	1.653	28572	7871	Sisma Y SLV	0	65.6	0	0	2.3E2	1.653
28573	7871	Sisma X SLD	64.6	0	0	0	2.3E2	1.653	28574	7871	Sisma Y SLD	0	64.6	0	0	2.3E2	1.653
28575	7872	Sisma X SLV	67.6	0	0	0	239.54	1.653	28576	7872	Sisma Y SLV	0	67.6	0	0	239.54	1.653
28577	7872	Sisma X SLD	66.5	0	0	0	239.54	1.653	28578	7872	Sisma Y SLD	0	66.5	0	0	239.54	1.653
28579	7873	Sisma X SLV	68.1	0	0	0	2.4E2	1.653	28580	7873	Sisma Y SLV	0	68.1	0	0	2.4E2	1.653
28581	7873	Sisma X SLD	67	0	0	0	2.4E2	1.653	28582	7873	Sisma Y SLD	0	67	0	0	2.4E2	1.653
28583	7874	Sisma X SLV	67.2	0	0	0	2.4E2	1.653	28584	7874	Sisma Y SLV	0	67.2	0	0	2.4E2	1.653
28585	7874	Sisma X SLD	66.1	0	0	0	2.4E2	1.653	28586	7874	Sisma Y SLD	0	66.1	0	0	2.4E2	1.653
28587	7875	Sisma X SLV	66.8	0	0	0	236.95	1.653	28588	7875	Sisma Y SLV	0	66.8	0	0	236.95	1.653
28589	7875	Sisma X SLD	65.8	0	0	0	236.95	1.653	28590	7875	Sisma Y SLD	0	65.8	0	0	236.95	1.653
28591	7876	Sisma X SLV	66.6	0	0	0	2.4E2	1.653	28592	7876	Sisma Y SLV	0	66.6	0	0	2.4E2	1.653
28593	7876	Sisma X SLD	65.5	0	0	0	2.4E2	1.653	28594	7876	Sisma Y SLD	0	65.5	0	0	2.4E2	1.653

muratura

Indice	Nodo	Condizione	Fx	Fy	Fz	Mz	Peso	Gamma	Indice	Nodo	Condizione	Fx	Fy	Fz	Mz	Peso	Gamma
28595	7877	Sisma X SLV	66.5	0	0	0	2.4E2	1.653	28596	7877	Sisma Y SLV	0	66.5	0	0	2.4E2	1.653
28597	7877	Sisma X SLD	65.4	0	0	0	2.4E2	1.653	28598	7877	Sisma Y SLD	0	65.4	0	0	2.4E2	1.653
28599	7878	Sisma X SLV	41	0	0	0	1.5E2	1.653	28600	7878	Sisma Y SLV	0	41	0	0	1.5E2	1.653
28601	7878	Sisma X SLD	40.4	0	0	0	1.5E2	1.653	28602	7878	Sisma Y SLD	0	40.4	0	0	1.5E2	1.653
28603	7879	Sisma X SLV	41	0	0	0	1.5E2	1.653	28604	7879	Sisma Y SLV	0	41	0	0	1.5E2	1.653
28605	7879	Sisma X SLD	40.4	0	0	0	1.5E2	1.653	28606	7879	Sisma Y SLD	0	40.4	0	0	1.5E2	1.653
28607	7880	Sisma X SLV	41	0	0	0	1.5E2	1.653	28608	7880	Sisma Y SLV	0	41	0	0	1.5E2	1.653
28609	7880	Sisma X SLD	40.4	0	0	0	1.5E2	1.653	28610	7880	Sisma Y SLD	0	40.4	0	0	1.5E2	1.653
28611	7881	Sisma X SLV	41	0	0	0	1.5E2	1.653	28612	7881	Sisma Y SLV	0	41	0	0	1.5E2	1.653
28613	7881	Sisma X SLD	40.4	0	0	0	1.5E2	1.653	28614	7881	Sisma Y SLD	0	40.4	0	0	1.5E2	1.653
28615	7882	Sisma X SLV	41	0	0	0	1.5E2	1.653	28616	7882	Sisma Y SLV	0	41	0	0	1.5E2	1.653
28617	7882	Sisma X SLD	40.4	0	0	0	1.5E2	1.653	28618	7882	Sisma Y SLD	0	40.4	0	0	1.5E2	1.653
28619	7883	Sisma X SLV	41.1	0	0	0	1.5E2	1.653	28620	7883	Sisma Y SLV	0	41.1	0	0	1.5E2	1.653
28621	7883	Sisma X SLD	40.4	0	0	0	1.5E2	1.653	28622	7883	Sisma Y SLD	0	40.4	0	0	1.5E2	1.653
28623	7884	Sisma X SLV	41.1	0	0	0	1.5E2	1.653	28624	7884	Sisma Y SLV	0	41.1	0	0	1.5E2	1.653
28625	7884	Sisma X SLD	40.4	0	0	0	1.5E2	1.653	28626	7884	Sisma Y SLD	0	40.4	0	0	1.5E2	1.653
28627	7885	Sisma X SLV	41.1	0	0	0	1.5E2	1.653	28628	7885	Sisma Y SLV	0	41.1	0	0	1.5E2	1.653
28629	7885	Sisma X SLD	40.4	0	0	0	1.5E2	1.653	28630	7885	Sisma Y SLD	0	40.4	0	0	1.5E2	1.653
28631	7886	Sisma X SLV	41.1	0	0	0	1.5E2	1.653	28632	7886	Sisma Y SLV	0	41.1	0	0	1.5E2	1.653
28633	7886	Sisma X SLD	40.5	0	0	0	1.5E2	1.653	28634	7886	Sisma Y SLD	0	40.5	0	0	1.5E2	1.653
28635	7887	Sisma X SLV	41.2	0	0	0	145.99	1.653	28636	7887	Sisma Y SLV	0	41.2	0	0	145.99	1.653
28637	7887	Sisma X SLD	40.5	0	0	0	145.99	1.653	28638	7887	Sisma Y SLD	0	40.5	0	0	145.99	1.653
28639	7888	Sisma X SLV	41.3	0	0	0	1.5E2	1.653	28640	7888	Sisma Y SLV	0	41.3	0	0	1.5E2	1.653
28641	7888	Sisma X SLD	40.7	0	0	0	1.5E2	1.653	28642	7888	Sisma Y SLD	0	40.7	0	0	1.5E2	1.653
28643	7889	Sisma X SLV	41	0	0	0	1.5E2	1.653	28644	7889	Sisma Y SLV	0	41	0	0	1.5E2	1.653
28645	7889	Sisma X SLD	40.4	0	0	0	1.5E2	1.653	28646	7889	Sisma Y SLD	0	40.4	0	0	1.5E2	1.653
28647	7890	Sisma X SLV	41.4	0	0	0	146.86	1.653	28648	7890	Sisma Y SLV	0	41.4	0	0	146.86	1.653
28649	7890	Sisma X SLD	40.8	0	0	0	146.86	1.653	28650	7890	Sisma Y SLD	0	40.8	0	0	146.86	1.653
28651	7891	Sisma X SLV	87.3	0	0	0	3.1E2	1.653	28652	7891	Sisma Y SLV	0	87.3	0	0	3.1E2	1.653
28653	7891	Sisma X SLD	85.9	0	0	0	3.1E2	1.653	28654	7891	Sisma Y SLD	0	85.9	0	0	3.1E2	1.653
28655	7892	Sisma X SLV	86.7	0	0	0	3.1E2	1.653	28656	7892	Sisma Y SLV	0	86.7	0	0	3.1E2	1.653
28657	7892	Sisma X SLD	85.4	0	0	0	3.1E2	1.653	28658	7892	Sisma Y SLD	0	85.4	0	0	3.1E2	1.653
28659	7893	Sisma X SLV	83.8	0	0	0	3.0E2	1.653	28660	7893	Sisma Y SLV	0	83.8	0	0	3.0E2	1.653
28661	7893	Sisma X SLD	82.5	0	0	0	3.0E2	1.653	28662	7893	Sisma Y SLD	0	82.5	0	0	3.0E2	1.653
28663	7894	Sisma X SLV	83.9	0	0	0	3.0E2	1.653	28664	7894	Sisma Y SLV	0	83.9	0	0	3.0E2	1.653
28665	7894	Sisma X SLD	82.6	0	0	0	3.0E2	1.653	28666	7894	Sisma Y SLD	0	82.6	0	0	3.0E2	1.653
28667	7895	Sisma X SLV	89.3	0	0	0	3.2E2	1.653	28668	7895	Sisma Y SLV	0	89.3	0	0	3.2E2	1.653
28669	7895	Sisma X SLD	87.8	0	0	0	3.2E2	1.653	28670	7895	Sisma Y SLD	0	87.8	0	0	3.2E2	1.653
28671	7896	Sisma X SLV	93.6	0	0	0	3.3E2	1.653	28672	7896	Sisma Y SLV	0	93.6	0	0	3.3E2	1.653
28673	7896	Sisma X SLD	92.1	0	0	0	3.3E2	1.653	28674	7896	Sisma Y SLD	0	92.1	0	0	3.3E2	1.653
28675	7897	Sisma X SLV	40.9	0	0	0	1.4E2	1.653	28676	7897	Sisma Y SLV	0	40.9	0	0	1.4E2	1.653
28677	7897	Sisma X SLD	40.2	0	0	0	1.4E2	1.653	28678	7897	Sisma Y SLD	0	40.2	0	0	1.4E2	1.653
28679	7898	Sisma X SLV	40.9	0	0	0	1.4E2	1.653	28680	7898	Sisma Y SLV	0	40.9	0	0	1.4E2	1.653
28681	7898	Sisma X SLD	40.2	0	0	0	1.4E2	1.653	28682	7898	Sisma Y SLD	0	40.2	0	0	1.4E2	1.653
28683	7899	Sisma X SLV	64.3	0	0	0	2.3E2	1.653	28684	7899	Sisma Y SLV	0	64.3	0	0	2.3E2	1.653
28685	7899	Sisma X SLD	63.3	0	0	0	2.3E2	1.653	28686	7899	Sisma Y SLD	0	63.3	0	0	2.3E2	1.653
28687	7900	Sisma X SLV	64.3	0	0	0	2.3E2	1.653	28688	7900	Sisma Y SLV	0	64.3	0	0	2.3E2	1.653
28689	7900	Sisma X SLD	63.3	0	0	0	2.3E2	1.653	28690	7900	Sisma Y SLD	0	63.3	0	0	2.3E2	1.653
28691	7901	Sisma X SLV	40.8	0	0	0	1.4E2	1.653	28692	7901	Sisma Y SLV	0	40.8	0	0	1.4E2	1.653
28693	7901	Sisma X SLD	40.2	0	0	0	1.4E2	1.653	28694	7901	Sisma Y SLD	0	40.2	0	0	1.4E2	1.653
28695	7902	Sisma X SLV	39.6	0	0	0	1.4E2	1.653	28696	7902	Sisma Y SLV	0	39.6	0	0	1.4E2	1.653
28697	7902	Sisma X SLD	39	0	0	0	1.4E2	1.653	28698	7902	Sisma Y SLD	0	39	0	0	1.4E2	1.653
28699	7903	Sisma X SLV	40.8	0	0	0	1.4E2	1.653	28700	7903	Sisma Y SLV	0	40.8	0	0	1.4E2	1.653
28701	7903	Sisma X SLD	40.1	0	0	0	1.4E2	1.653	28702	7903	Sisma Y SLD	0	40.1	0	0	1.4E2	1.653
28703	7904	Sisma X SLV	40.7	0	0	0	1.4E2	1.653	28704	7904	Sisma Y SLV	0	40.7	0	0	1.4E2	1.653
28705	7904	Sisma X SLD	40	0	0	0	1.4E2	1.653	28706	7904	Sisma Y SLD	0	40	0	0	1.4E2	1.653
28707	7905	Sisma X SLV	39.7	0	0	0	1.4E2	1.653	28708	7905	Sisma Y SLV	0	39.7	0	0	1.4E2	1.653
28709	7905	Sisma X SLD	39	0	0	0	1.4E2	1.653	28710	7905	Sisma Y SLD	0	39	0	0	1.4E2	1.653
28711	7906	Sisma X SLV	66.1	0	0	0	2.3E2	1.653	28712	7906	Sisma Y SLV	0	66.1	0	0	2.3E2	1.653
28713	7906	Sisma X SLD	65	0	0	0	2.3E2	1.653	28714	7906	Sisma Y SLD	0	65	0	0	2.3E2	1.653
28715	7907	Sisma X SLV	40.5	0	0	0	1.4E2	1.653	28716	7907	Sisma Y SLV	0	40.5	0	0	1.4E2	1.653
28717	7907	Sisma X SLD	39.9	0	0	0	1.4E2	1.653	28718	7907	Sisma Y SLD	0	39.9	0	0	1.4E2	1.653
28719	7908	Sisma X SLV	43.1	0	0	0	152.76	1.653	28720	7908	Sisma Y SLV	0	43.1	0	0	152.76	1.653
28721	7908	Sisma X SLD	42.4	0	0	0	152.76	1.653	28722	7908	Sisma Y SLD	0	42.4	0	0	152.76	1.653
28723	7909	Sisma X SLV	39.7	0	0	0	1.4E2	1.654	28724	7909	Sisma Y SLV	0	39.7	0	0	1.4E2	1.654
28725	7909	Sisma X SLD	39.1	0	0	0	1.4E2	1.654	28726	7909	Sisma Y SLD	0	39.1	0	0	1.4E2	1.654
28727	7910	Sisma X SLV	40.3	0	0	0	1.4E2	1.654	28728	7910	Sisma Y SLV	0	40.3	0	0	1.4E2	1.654
28729	7910	Sisma X SLD	39.7	0	0	0	1.4E2	1.654	28730	7910	Sisma Y SLD	0	39.7	0	0	1.4E2	1.654
28731	7911	Sisma X SLV	39.8	0	0	0	1.4E2	1.654	28732	7911	Sisma Y SLV	0	39.8	0	0	1.4E2	1.654
28733	7911	Sisma X SLD	39.2	0	0	0	1.4E2	1.654	28734	7911	Sisma Y SLD	0	39.2	0	0	1.4E2	1.654
28735	7912	Sisma X SLV	40.2	0	0	0	1.4E2	1.654	28736	7912	Sisma Y SLV	0	40.2	0	0	1.4E2	1.654
28737	7912	Sisma X SLD	39.5	0	0	0	1.4E2	1.654	28738	7912	Sisma Y SLD	0	39.5	0	0	1.4E2	1.654
28739	7913	Sisma X SLV	40	0	0	0	141.69	1.654	28740	7913	Sisma Y SLV	0	40	0	0	141.69	1.654
28741	7913	Sisma X SLD	39.3	0	0	0	141.69	1.654	28742	7913	Sisma Y SLD	0	39.3	0	0	141.69	1.654
28743	7914	Sisma X SLV	42.4	0	0	0	1.5E2	1.654	28744	7914	Sisma Y SLV	0	42.4	0	0	1.5E2	1.654
28745	7914	Sisma X SLD	41.7	0	0	0	1.5E2	1.654	28746	7914	Sisma Y SLD	0	41.7	0	0	1.5E2	1.654
28747	7915	Sisma X SLV	65.9	0	0	0	2.3E2	1.654	28748	7915	Sisma Y SLV	0	65.9	0	0	2.3E2	1.654
28749	7915	Sisma X SLD	64.8	0	0	0	2.3E2	1.654	28750	7915	Sisma Y SLD	0	64.8	0	0	2.3E2	1.654
28751	7916	Sisma X SLV	67.3	0	0	0	2.4E2	1.654	28752	7916	Sisma Y SLV	0	67.3	0	0	2.4E2	1.654
28753	7916	Sisma X SLD	66.2	0	0	0	2.4E2	1.654	28754	7916	Sisma Y SLD	0	66.2	0	0	2.4E2	1.654
28755	7917	Sisma X SLV	67.3	0	0	0	2.4E2	1.654	28756	7917	Sisma Y SLV	0	67.3	0	0	2.4E2	1.654
28757	7917	Sisma X SLD	66.2	0	0	0	2.4E2	1.654	28758	7917	Sisma Y SLD	0	66.2	0	0	2.4E2	1.654
28759	7918	Sisma X SLV	62.4	0	0	0	221.03	1.654	28760	7918	Sisma Y SLV	0	62.4	0	0	221.03	1.654
28761	7918	Sisma X SLD	61.4	0	0	0	221.03	1.654	28762	7918	Sisma Y SLD	0	61.4	0	0	221.03	1.654
28763	7919	Sisma X SLV	62.4	0	0	0	221.03	1.654	28764	7919	Sisma Y SLV	0	62.4	0	0	221.03	1.654
28765	7919	Sisma X SLD	61.4	0	0	0	221.03	1.654	28766	7919	Sisma Y SLD	0	61.4	0	0	221.03	1.654
28767	7920	Sisma X SLV	63.9	0	0	0	2.3E2	1.654	28768	7920	Sisma Y SLV	0	63.9	0	0	2.3E2	1.654
28769	7920	Sisma X SLD	62.8	0	0	0	2.3E2	1.654	28770	7920	Sisma Y SLD	0	62.8	0	0	2.3E2	1.654
28771	7921	Sisma X SLV	63.9	0	0	0	2.3E2	1.654	28772	7921	Sisma Y SLV	0	63.9	0	0	2.3E2	1.654
28773	7921	Sisma X SLD	62.8	0	0	0	2.3E2	1.654	28774	7921	Sisma Y SLD	0	62.8	0	0	2.3E2	1.654
28775	7922	Sisma X SLV	67.1	0	0	0	2.4E2	1.654	28776	7922	Sisma Y SLV	0	67.1	0	0	2.4E2	1.654
28777	7922	Sisma X SLD	66.1	0	0	0	2.4E2	1.654	28778	7922	Sisma Y SLD	0	66.1	0	0	2.4E2	1.654
28779	7923	Sisma X SLV	66.6	0	0	0	2.4E2	1.654	28780	7923	Sisma Y SLV	0	66.6	0	0	2.4E2	1.654
28781	7923	Sisma X SLD	65.5	0	0	0	2.4E2	1.654	28782	7923	Sisma Y SLD	0	65.5	0	0	2.4E2	1.654
28783	7924	Sisma X SLV	65.5	0	0	0	2.3E2	1.654	28784	7924	Sisma Y SLV	0	65.5	0	0	2.3E2	1.654
28785	7924	Sisma X SLD	64.5	0	0	0	2.3E2	1.654	28786	7924	Sisma Y SLD	0	64.5	0	0	2.3E2	1.654
28787	7925	Sisma X SLV	42.7	0	0	0	1.5E2	1.654	28788	7925	Sisma Y SLV	0	42.7	0	0	1.5E2	1.654
28789	7925	Sisma X SLD	42	0	0	0	1.5E2	1.654	28790	7925	Sisma Y SLD	0	42	0	0	1.5E2	1.654
28791	7926	Sisma X SLV	42.1	0	0	0	1.5E2	1.654	28792	7926	Sisma Y SLV	0	42.1	0	0	1.5E2	1.654
28793	7926	Sisma X SLD	41.4	0	0	0	1.5E2	1.654	28794	7926	Sisma Y SLD	0	41.4	0	0	1.5E2	1.654
28795	7927	Sisma X SLV	66.8	0	0	0	2.4E2	1.655	28796	7927	Sisma Y SLV	0	66.8	0	0	2.4E2	1.655

Indice	Nodo	Condizione	Fx	Fy	Fz	Mz	Peso	Gamma	Indice	Nodo	Condizione	Fx	Fy	Fz	Mz	Peso	Gamma
28797	7927	Sisma X SLD	65.8	0	0	0	2.4E2	1.655	28798	7927	Sisma Y SLD	0	65.8	0	0	2.4E2	1.655
28799	7928	Sisma X SLV	66.8	0	0	0	2.4E2	1.655	28800	7928	Sisma Y SLV	0	66.8	0	0	2.4E2	1.655
28801	7928	Sisma X SLD	65.7	0	0	0	2.4E2	1.655	28802	7928	Sisma Y SLD	0	65.7	0	0	2.4E2	1.655
28803	7929	Sisma X SLV	66.3	0	0	0	2.3E2	1.655	28804	7929	Sisma Y SLV	0	66.3	0	0	2.3E2	1.655
28805	7929	Sisma X SLD	65.2	0	0	0	2.3E2	1.655	28806	7929	Sisma Y SLD	0	65.2	0	0	2.3E2	1.655
28807	7930	Sisma X SLV	63.4	0	0	0	224.35	1.655	28808	7930	Sisma Y SLV	0	63.4	0	0	224.35	1.655
28809	7930	Sisma X SLD	62.3	0	0	0	224.35	1.655	28810	7930	Sisma Y SLD	0	62.3	0	0	224.35	1.655
28811	7931	Sisma X SLV	63.4	0	0	0	224.35	1.655	28812	7931	Sisma Y SLV	0	63.4	0	0	224.35	1.655
28813	7931	Sisma X SLD	62.3	0	0	0	224.35	1.655	28814	7931	Sisma Y SLD	0	62.3	0	0	224.35	1.655
28815	7932	Sisma X SLV	65.1	0	0	0	2.3E2	1.655	28816	7932	Sisma Y SLV	0	65.1	0	0	2.3E2	1.655
28817	7932	Sisma X SLD	64.1	0	0	0	2.3E2	1.655	28818	7932	Sisma Y SLD	0	64.1	0	0	2.3E2	1.655
28819	7933	Sisma X SLV	41.8	0	0	0	147.94	1.655	28820	7933	Sisma Y SLV	0	41.8	0	0	147.94	1.655
28821	7933	Sisma X SLD	41.1	0	0	0	147.94	1.655	28822	7933	Sisma Y SLD	0	41.1	0	0	147.94	1.655
28823	7934	Sisma X SLV	61.7	0	0	0	2.2E2	1.655	28824	7934	Sisma Y SLV	0	61.7	0	0	2.2E2	1.655
28825	7934	Sisma X SLD	60.7	0	0	0	2.2E2	1.655	28826	7934	Sisma Y SLD	0	60.7	0	0	2.2E2	1.655
28827	7935	Sisma X SLV	61.7	0	0	0	2.2E2	1.655	28828	7935	Sisma Y SLV	0	61.7	0	0	2.2E2	1.655
28829	7935	Sisma X SLD	60.7	0	0	0	2.2E2	1.655	28830	7935	Sisma Y SLD	0	60.7	0	0	2.2E2	1.655
28831	7936	Sisma X SLV	66.3	0	0	0	2.3E2	1.655	28832	7936	Sisma Y SLV	0	66.3	0	0	2.3E2	1.655
28833	7936	Sisma X SLD	65.3	0	0	0	2.3E2	1.655	28834	7936	Sisma Y SLD	0	65.3	0	0	2.3E2	1.655
28835	7937	Sisma X SLV	42.3	0	0	0	1.5E2	1.655	28836	7937	Sisma Y SLV	0	42.3	0	0	1.5E2	1.655
28837	7937	Sisma X SLD	41.6	0	0	0	1.5E2	1.655	28838	7937	Sisma Y SLD	0	41.6	0	0	1.5E2	1.655
28839	7938	Sisma X SLV	66.3	0	0	0	2.3E2	1.655	28840	7938	Sisma Y SLV	0	66.3	0	0	2.3E2	1.655
28841	7938	Sisma X SLD	65.2	0	0	0	2.3E2	1.655	28842	7938	Sisma Y SLD	0	65.2	0	0	2.3E2	1.655
28843	7939	Sisma X SLV	66	0	0	0	2.3E2	1.655	28844	7939	Sisma Y SLV	0	66	0	0	2.3E2	1.655
28845	7939	Sisma X SLD	65	0	0	0	2.3E2	1.655	28846	7939	Sisma Y SLD	0	65	0	0	2.3E2	1.655
28847	7940	Sisma X SLV	65.7	0	0	0	2.3E2	1.655	28848	7940	Sisma Y SLV	0	65.7	0	0	2.3E2	1.655
28849	7940	Sisma X SLD	64.6	0	0	0	2.3E2	1.655	28850	7940	Sisma Y SLD	0	64.6	0	0	2.3E2	1.655
28851	7941	Sisma X SLV	62.8	0	0	0	2.2E2	1.656	28852	7941	Sisma Y SLV	0	62.8	0	0	2.2E2	1.656
28853	7941	Sisma X SLD	61.8	0	0	0	2.2E2	1.656	28854	7941	Sisma Y SLD	0	61.8	0	0	2.2E2	1.656
28855	7942	Sisma X SLV	62.8	0	0	0	2.2E2	1.656	28856	7942	Sisma Y SLV	0	62.8	0	0	2.2E2	1.656
28857	7942	Sisma X SLD	61.8	0	0	0	2.2E2	1.656	28858	7942	Sisma Y SLD	0	61.8	0	0	2.2E2	1.656
28859	7943	Sisma X SLV	64.7	0	0	0	2.3E2	1.656	28860	7943	Sisma Y SLV	0	64.7	0	0	2.3E2	1.656
28861	7943	Sisma X SLD	63.7	0	0	0	2.3E2	1.656	28862	7943	Sisma Y SLD	0	63.7	0	0	2.3E2	1.656
28863	7944	Sisma X SLV	41.5	0	0	0	1.5E2	1.656	28864	7944	Sisma Y SLV	0	41.5	0	0	1.5E2	1.656
28865	7944	Sisma X SLD	40.8	0	0	0	1.5E2	1.656	28866	7944	Sisma Y SLD	0	40.8	0	0	1.5E2	1.656
28867	7945	Sisma X SLV	65.8	0	0	0	2.3E2	1.656	28868	7945	Sisma Y SLV	0	65.8	0	0	2.3E2	1.656
28869	7945	Sisma X SLD	64.8	0	0	0	2.3E2	1.656	28870	7945	Sisma Y SLD	0	64.8	0	0	2.3E2	1.656
28871	7946	Sisma X SLV	65.5	0	0	0	2.3E2	1.656	28872	7946	Sisma Y SLV	0	65.5	0	0	2.3E2	1.656
28873	7946	Sisma X SLD	64.4	0	0	0	2.3E2	1.656	28874	7946	Sisma Y SLD	0	64.4	0	0	2.3E2	1.656
28875	7947	Sisma X SLV	65.7	0	0	0	2.3E2	1.656	28876	7947	Sisma Y SLV	0	65.7	0	0	2.3E2	1.656
28877	7947	Sisma X SLD	64.7	0	0	0	2.3E2	1.656	28878	7947	Sisma Y SLD	0	64.7	0	0	2.3E2	1.656
28879	7948	Sisma X SLV	61.3	0	0	0	2.2E2	1.656	28880	7948	Sisma Y SLV	0	61.3	0	0	2.2E2	1.656
28881	7948	Sisma X SLD	60.3	0	0	0	2.2E2	1.656	28882	7948	Sisma Y SLD	0	60.3	0	0	2.2E2	1.656
28883	7949	Sisma X SLV	61.3	0	0	0	2.2E2	1.656	28884	7949	Sisma Y SLV	0	61.3	0	0	2.2E2	1.656
28885	7949	Sisma X SLD	60.3	0	0	0	2.2E2	1.656	28886	7949	Sisma Y SLD	0	60.3	0	0	2.2E2	1.656
28887	7950	Sisma X SLV	41.8	0	0	0	1.5E2	1.656	28888	7950	Sisma Y SLV	0	41.8	0	0	1.5E2	1.656
28889	7950	Sisma X SLD	41.2	0	0	0	1.5E2	1.656	28890	7950	Sisma Y SLD	0	41.2	0	0	1.5E2	1.656
28891	7951	Sisma X SLV	62.2	0	0	0	2.2E2	1.656	28892	7951	Sisma Y SLV	0	62.2	0	0	2.2E2	1.656
28893	7951	Sisma X SLD	61.2	0	0	0	2.2E2	1.656	28894	7951	Sisma Y SLD	0	61.2	0	0	2.2E2	1.656
28895	7952	Sisma X SLV	62.2	0	0	0	2.2E2	1.656	28896	7952	Sisma Y SLV	0	62.2	0	0	2.2E2	1.656
28897	7952	Sisma X SLD	61.2	0	0	0	2.2E2	1.656	28898	7952	Sisma Y SLD	0	61.2	0	0	2.2E2	1.656
28899	7953	Sisma X SLV	65.1	0	0	0	2.3E2	1.656	28900	7953	Sisma Y SLV	0	65.1	0	0	2.3E2	1.656
28901	7953	Sisma X SLD	64.1	0	0	0	2.3E2	1.656	28902	7953	Sisma Y SLD	0	64.1	0	0	2.3E2	1.656
28903	7954	Sisma X SLV	64.4	0	0	0	2.3E2	1.656	28904	7954	Sisma Y SLV	0	64.4	0	0	2.3E2	1.656
28905	7954	Sisma X SLD	63.4	0	0	0	2.3E2	1.656	28906	7954	Sisma Y SLD	0	63.4	0	0	2.3E2	1.656
28907	7955	Sisma X SLV	65.1	0	0	0	2.3E2	1.656	28908	7955	Sisma Y SLV	0	65.1	0	0	2.3E2	1.656
28909	7955	Sisma X SLD	64	0	0	0	2.3E2	1.656	28910	7955	Sisma Y SLD	0	64	0	0	2.3E2	1.656
28911	7956	Sisma X SLV	65.3	0	0	0	2.3E2	1.656	28912	7956	Sisma Y SLV	0	65.3	0	0	2.3E2	1.656
28913	7956	Sisma X SLD	64.3	0	0	0	2.3E2	1.656	28914	7956	Sisma Y SLD	0	64.3	0	0	2.3E2	1.656
28915	7957	Sisma X SLV	41.2	0	0	0	145.86	1.657	28916	7957	Sisma Y SLV	0	41.2	0	0	145.86	1.657
28917	7957	Sisma X SLD	40.6	0	0	0	145.86	1.657	28918	7957	Sisma Y SLD	0	40.6	0	0	145.86	1.657
28919	7958	Sisma X SLV	65.2	0	0	0	2.3E2	1.657	28920	7958	Sisma Y SLV	0	65.2	0	0	2.3E2	1.657
28921	7958	Sisma X SLD	64.2	0	0	0	2.3E2	1.657	28922	7958	Sisma Y SLD	0	64.2	0	0	2.3E2	1.657
28923	7959	Sisma X SLV	64.3	0	0	0	2.3E2	1.657	28924	7959	Sisma Y SLV	0	64.3	0	0	2.3E2	1.657
28925	7959	Sisma X SLD	63.3	0	0	0	2.3E2	1.657	28926	7959	Sisma Y SLD	0	63.3	0	0	2.3E2	1.657
28927	7960	Sisma X SLV	64.5	0	0	0	2.3E2	1.657	28928	7960	Sisma Y SLV	0	64.5	0	0	2.3E2	1.657
28929	7960	Sisma X SLD	63.5	0	0	0	2.3E2	1.657	28930	7960	Sisma Y SLD	0	63.5	0	0	2.3E2	1.657
28931	7961	Sisma X SLV	64.9	0	0	0	2.3E2	1.657	28932	7961	Sisma Y SLV	0	64.9	0	0	2.3E2	1.657
28933	7961	Sisma X SLD	63.9	0	0	0	2.3E2	1.657	28934	7961	Sisma Y SLD	0	63.9	0	0	2.3E2	1.657
28935	7962	Sisma X SLV	61.2	0	0	0	2.2E2	1.657	28936	7962	Sisma Y SLV	0	61.2	0	0	2.2E2	1.657
28937	7962	Sisma X SLD	60.2	0	0	0	2.2E2	1.657	28938	7962	Sisma Y SLD	0	60.2	0	0	2.2E2	1.657
28939	7963	Sisma X SLV	61.2	0	0	0	2.2E2	1.657	28940	7963	Sisma Y SLV	0	61.2	0	0	2.2E2	1.657
28941	7963	Sisma X SLD	60.2	0	0	0	2.2E2	1.657	28942	7963	Sisma Y SLD	0	60.2	0	0	2.2E2	1.657
28943	7964	Sisma X SLV	61.7	0	0	0	2.2E2	1.657	28944	7964	Sisma Y SLV	0	61.7	0	0	2.2E2	1.657
28945	7964	Sisma X SLD	60.7	0	0	0	2.2E2	1.657	28946	7964	Sisma Y SLD	0	60.7	0	0	2.2E2	1.657
28947	7965	Sisma X SLV	61.7	0	0	0	2.2E2	1.657	28948	7965	Sisma Y SLV	0	61.7	0	0	2.2E2	1.657
28949	7965	Sisma X SLD	60.7	0	0	0	2.2E2	1.657	28950	7965	Sisma Y SLD	0	60.7	0	0	2.2E2	1.657
28951	7966	Sisma X SLV	41.4	0	0	0	1.5E2	1.657	28952	7966	Sisma Y SLV	0	41.4	0	0	1.5E2	1.657
28953	7966	Sisma X SLD	40.8	0	0	0	1.5E2	1.657	28954	7966	Sisma Y SLD	0	40.8	0	0	1.5E2	1.657
28955	7967	Sisma X SLV	64.8	0	0	0	229.31	1.657	28956	7967	Sisma Y SLV	0	64.8	0	0	229.31	1.657
28957	7967	Sisma X SLD	63.8	0	0	0	229.31	1.657	28958	7967	Sisma Y SLD	0	63.8	0	0	229.31	1.657
28959	7968	Sisma X SLV	64.9	0	0	0	2.3E2	1.657	28960	7968	Sisma Y SLV	0	64.9	0	0	2.3E2	1.657
28961	7968	Sisma X SLD	63.9	0	0	0	2.3E2	1.657	28962	7968	Sisma Y SLD	0	63.9	0	0	2.3E2	1.657
28963	7969	Sisma X SLV	61.3	0	0	0	2.2E2	1.657	28964	7969	Sisma Y SLV	0	61.3	0	0	2.2E2	1.657
28965	7969	Sisma X SLD	60.4	0	0	0	2.2E2	1.657	28966	7969	Sisma Y SLD	0	60.4	0	0	2.2E2	1.657
28967	7970	Sisma X SLV	61.3	0	0	0	2.2E2	1.657	28968	7970	Sisma Y SLV	0	61.3	0	0	2.2E2	1.657
28969	7970	Sisma X SLD	60.4	0	0	0	2.2E2	1.657	28970	7970	Sisma Y SLD	0	60.4	0	0	2.2E2	1.657
28971	7971	Sisma X SLV	41.1	0	0	0	1.5E2	1.657	28972	7971	Sisma Y SLV	0	41.1	0	0	1.5E2	1.657
28973	7971	Sisma X SLD	40.4	0	0	0	1.5E2	1.657	28974	7971	Sisma Y SLD	0	40.4	0	0	1.5E2	1.657
28975	7972	Sisma X SLV	64.8	0	0	0	229.28	1.657	28976	7972	Sisma Y SLV	0	64.8	0	0	229.28	1.657
28977	7972	Sisma X SLD	63.8	0	0	0	229.28	1.657	28978	7972	Sisma Y SLD	0	63.8	0	0	229.28	1.657
28979	7973	Sisma X SLV	64.7	0	0	0	2.3E2	1.657	28980	7973	Sisma Y SLV	0	64.7	0	0	2.3E2	1.657
28981	7973	Sisma X SLD	63.7	0	0	0	2.3E2	1.657	28982	7973	Sisma Y SLD	0	63.7	0	0	2.3E2	1.657
28983	7974	Sisma X SLV	41.2	0	0	0	1.5E2	1.657	28984	7974	Sisma Y SLV	0	41.2	0	0	1.5E2	1.657
28985	7974	Sisma X SLD	40.5	0	0	0	1.5E2	1.657	28986	7974	Sisma Y SLD	0	40.5	0	0	1.5E2	1.657
28987	7975	Sisma X SLV	41	0	0	0	145.08	1.657	28988	7975	Sisma Y SLV	0	41	0	0	145.08	1.657
28989	7975	Sisma X SLD	40.4	0	0	0	145.08	1.657	28990	7975	Sisma Y SLD	0	40.4	0	0	145.08	1.657
28991	7976	Sisma X SLV	52.1	0	0	0	1.8E2	1.669	28992	7976	Sisma Y SLV	0	52.1	0	0	1.8E2	1.669
28993	7976	Sisma X SLD	51.2	0	0	0	1.8E2	1.669	28994	7976	Sisma Y SLD	0	51.2	0	0	1.8E2	1.669
28995	7977	Sisma X SLV	52.1	0	0	0	1.8E2	1.669	28996	7977	Sisma Y SLV	0	52.1	0	0	1.8E2	1.669
28997	7977	Sisma X SLD	51.2	0	0	0	1.8E2	1.669	28998	7977	Sisma Y SLD	0	51.2	0	0	1.8E2	1.669
28999	7978	Sisma X SLV	52.9	0	0	0	1.9E2	1.67	29000	7978	Sisma Y SLV	0	52.9	0	0	1.9E2	1.67
29001	7978	Sisma X SLD	52.1	0	0	0	1.9E2	1.67	29002	7978	Sisma Y SLD	0	52.1	0	0	1.9E2	1.67
29003	7979	Sisma X SLV	52.9	0	0	0	1.9E2	1.67	29004	7979	Sisma Y SLV	0	52.9	0	0	1.9E2	1.67

Indice	Nodo	Condizione	Fx	Fy	Fz	Mz	Peso	Gamma	Indice	Nodo	Condizione	Fx	Fy	Fz	Mz	Peso	Gamma
29005	7979	Sisma X SLD	52.1	0	0	0	1.9E2	1.67	29006	7979	Sisma Y SLD	0	52.1	0	0	1.9E2	1.67
29007	7980	Sisma X SLV	55.6	0	0	0	1.9E2	1.672	29008	7980	Sisma Y SLV	0	55.6	0	0	1.9E2	1.672
29009	7980	Sisma X SLD	54.7	0	0	0	1.9E2	1.672	29010	7980	Sisma Y SLD	0	54.7	0	0	1.9E2	1.672
29011	7981	Sisma X SLV	55.6	0	0	0	1.9E2	1.672	29012	7981	Sisma Y SLV	0	55.6	0	0	1.9E2	1.672
29013	7981	Sisma X SLD	54.7	0	0	0	1.9E2	1.672	29014	7981	Sisma Y SLD	0	54.7	0	0	1.9E2	1.672
29015	7982	Sisma X SLV	27	0	0	0	94.531	1.672	29016	7982	Sisma Y SLV	0	27	0	0	94.531	1.672
29017	7982	Sisma X SLD	26.5	0	0	0	94.531	1.672	29018	7982	Sisma Y SLD	0	26.5	0	0	94.531	1.672
29019	7983	Sisma X SLV	27	0	0	0	94.531	1.672	29020	7983	Sisma Y SLV	0	27	0	0	94.531	1.672
29021	7983	Sisma X SLD	26.5	0	0	0	94.531	1.672	29022	7983	Sisma Y SLD	0	26.5	0	0	94.531	1.672
29023	7984	Sisma X SLV	54.9	0	0	0	192.18	1.674	29024	7984	Sisma Y SLV	0	54.9	0	0	192.18	1.674
29025	7984	Sisma X SLD	54	0	0	0	192.18	1.674	29026	7984	Sisma Y SLD	0	54	0	0	192.18	1.674
29027	7985	Sisma X SLV	54.9	0	0	0	192.18	1.674	29028	7985	Sisma Y SLV	0	54.9	0	0	192.18	1.674
29029	7985	Sisma X SLD	54	0	0	0	192.18	1.674	29030	7985	Sisma Y SLD	0	54	0	0	192.18	1.674
29031	7986	Sisma X SLV	59.9	0	0	0	2.1E2	1.674	29032	7986	Sisma Y SLV	0	59.9	0	0	2.1E2	1.674
29033	7986	Sisma X SLD	58.9	0	0	0	2.1E2	1.674	29034	7986	Sisma Y SLD	0	58.9	0	0	2.1E2	1.674
29035	7987	Sisma X SLV	59.8	0	0	0	2.1E2	1.675	29036	7987	Sisma Y SLV	0	59.8	0	0	2.1E2	1.675
29037	7987	Sisma X SLD	58.8	0	0	0	2.1E2	1.675	29038	7987	Sisma Y SLD	0	58.8	0	0	2.1E2	1.675
29039	7988	Sisma X SLV	28.2	0	0	0	98.594	1.675	29040	7988	Sisma Y SLV	0	28.2	0	0	98.594	1.675
29041	7988	Sisma X SLD	27.7	0	0	0	98.594	1.675	29042	7988	Sisma Y SLD	0	27.7	0	0	98.594	1.675
29043	7989	Sisma X SLV	41	0	0	0	1.4E2	1.675	29044	7989	Sisma Y SLV	0	41	0	0	1.4E2	1.675
29045	7989	Sisma X SLD	40.4	0	0	0	1.4E2	1.675	29046	7989	Sisma Y SLD	0	40.4	0	0	1.4E2	1.675
29047	7990	Sisma X SLV	41	0	0	0	1.4E2	1.675	29048	7990	Sisma Y SLV	0	41	0	0	1.4E2	1.675
29049	7990	Sisma X SLD	40.4	0	0	0	1.4E2	1.675	29050	7990	Sisma Y SLD	0	40.4	0	0	1.4E2	1.675
29051	7991	Sisma X SLV	53.7	0	0	0	1.9E2	1.676	29052	7991	Sisma Y SLV	0	53.7	0	0	1.9E2	1.676
29053	7991	Sisma X SLD	52.9	0	0	0	1.9E2	1.676	29054	7991	Sisma Y SLD	0	52.9	0	0	1.9E2	1.676
29055	7992	Sisma X SLV	53.9	0	0	0	1.9E2	1.676	29056	7992	Sisma Y SLV	0	53.9	0	0	1.9E2	1.676
29057	7992	Sisma X SLD	53	0	0	0	1.9E2	1.676	29058	7992	Sisma Y SLD	0	53	0	0	1.9E2	1.676
29059	7993	Sisma X SLV	58.7	0	0	0	2.1E2	1.677	29060	7993	Sisma Y SLV	0	58.7	0	0	2.1E2	1.677
29061	7993	Sisma X SLD	57.8	0	0	0	2.1E2	1.677	29062	7993	Sisma Y SLD	0	57.8	0	0	2.1E2	1.677
29063	7994	Sisma X SLV	41.4	0	0	0	1.4E2	1.679	29064	7994	Sisma Y SLV	0	41.4	0	0	1.4E2	1.679
29065	7994	Sisma X SLD	40.7	0	0	0	1.4E2	1.679	29066	7994	Sisma Y SLD	0	40.7	0	0	1.4E2	1.679
29067	7995	Sisma X SLV	41.4	0	0	0	1.4E2	1.679	29068	7995	Sisma Y SLV	0	41.4	0	0	1.4E2	1.679
29069	7995	Sisma X SLD	40.7	0	0	0	1.4E2	1.679	29070	7995	Sisma Y SLD	0	40.7	0	0	1.4E2	1.679
29071	7996	Sisma X SLV	57.5	0	0	0	2.0E2	1.679	29072	7996	Sisma Y SLV	0	57.5	0	0	2.0E2	1.679
29073	7996	Sisma X SLD	56.6	0	0	0	2.0E2	1.679	29074	7996	Sisma Y SLD	0	56.6	0	0	2.0E2	1.679
29075	7997	Sisma X SLV	25	0	0	0	87.372	1.68	29076	7997	Sisma Y SLV	0	25	0	0	87.372	1.68
29077	7997	Sisma X SLD	24.6	0	0	0	87.372	1.68	29078	7997	Sisma Y SLD	0	24.6	0	0	87.372	1.68
29079	7998	Sisma X SLV	25	0	0	0	87.372	1.68	29080	7998	Sisma Y SLV	0	25	0	0	87.372	1.68
29081	7998	Sisma X SLD	24.6	0	0	0	87.372	1.68	29082	7998	Sisma Y SLD	0	24.6	0	0	87.372	1.68
29083	7999	Sisma X SLV	41.7	0	0	0	1.5E2	1.68	29084	7999	Sisma Y SLV	0	41.7	0	0	1.5E2	1.68
29085	7999	Sisma X SLD	41	0	0	0	1.5E2	1.68	29086	7999	Sisma Y SLD	0	41	0	0	1.5E2	1.68
29087	8000	Sisma X SLV	56.3	0	0	0	2.0E2	1.681	29088	8000	Sisma Y SLV	0	56.3	0	0	2.0E2	1.681
29089	8000	Sisma X SLD	55.4	0	0	0	2.0E2	1.681	29090	8000	Sisma Y SLD	0	55.4	0	0	2.0E2	1.681
29091	8001	Sisma X SLV	49.8	0	0	0	1.7E2	1.681	29092	8001	Sisma Y SLV	0	49.8	0	0	1.7E2	1.681
29093	8001	Sisma X SLD	49	0	0	0	1.7E2	1.681	29094	8001	Sisma Y SLD	0	49	0	0	1.7E2	1.681
29095	8002	Sisma X SLV	54.7	0	0	0	1.9E2	1.682	29096	8002	Sisma Y SLV	0	54.7	0	0	1.9E2	1.682
29097	8002	Sisma X SLD	53.9	0	0	0	1.9E2	1.682	29098	8002	Sisma Y SLD	0	53.9	0	0	1.9E2	1.682
29099	8003	Sisma X SLV	23.4	0	0	0	81.386	1.683	29100	8003	Sisma Y SLV	0	23.4	0	0	81.386	1.683
29101	8003	Sisma X SLD	23	0	0	0	81.386	1.683	29102	8003	Sisma Y SLD	0	23	0	0	81.386	1.683
29103	8004	Sisma X SLV	38.7	0	0	0	134.54	1.685	29104	8004	Sisma Y SLV	0	38.7	0	0	134.54	1.685
29105	8004	Sisma X SLD	38.1	0	0	0	134.54	1.685	29106	8004	Sisma Y SLD	0	38.1	0	0	134.54	1.685
29107	8005	Sisma X SLV	38.7	0	0	0	134.54	1.685	29108	8005	Sisma Y SLV	0	38.7	0	0	134.54	1.685
29109	8005	Sisma X SLD	38.1	0	0	0	134.54	1.685	29110	8005	Sisma Y SLD	0	38.1	0	0	134.54	1.685
29111	8006	Sisma X SLV	33.8	0	0	0	1.2E2	1.686	29112	8006	Sisma Y SLV	0	33.8	0	0	1.2E2	1.686
29113	8006	Sisma X SLD	33.3	0	0	0	1.2E2	1.686	29114	8006	Sisma Y SLD	0	33.3	0	0	1.2E2	1.686
29115	8007	Sisma X SLV	33.8	0	0	0	1.2E2	1.686	29116	8007	Sisma Y SLV	0	33.8	0	0	1.2E2	1.686
29117	8007	Sisma X SLD	33.3	0	0	0	1.2E2	1.686	29118	8007	Sisma Y SLD	0	33.3	0	0	1.2E2	1.686
29119	8008	Sisma X SLV	37.1	0	0	0	1.3E2	1.688	29120	8008	Sisma Y SLV	0	37.1	0	0	1.3E2	1.688
29121	8008	Sisma X SLD	36.5	0	0	0	1.3E2	1.688	29122	8008	Sisma Y SLD	0	36.5	0	0	1.3E2	1.688
29123	8009	Sisma X SLV	32.2	0	0	0	1.1E2	1.69	29124	8009	Sisma Y SLV	0	32.2	0	0	1.1E2	1.69
29125	8009	Sisma X SLD	31.7	0	0	0	1.1E2	1.69	29126	8009	Sisma Y SLD	0	31.7	0	0	1.1E2	1.69
29127	8010	Sisma X SLV	66.9	0	0	0	2.3E2	1.709	29128	8010	Sisma Y SLV	0	66.9	0	0	2.3E2	1.709
29129	8010	Sisma X SLD	65.8	0	0	0	2.3E2	1.709	29130	8010	Sisma Y SLD	0	65.8	0	0	2.3E2	1.709
29131	8011	Sisma X SLV	66.9	0	0	0	2.3E2	1.709	29132	8011	Sisma Y SLV	0	66.9	0	0	2.3E2	1.709
29133	8011	Sisma X SLD	65.8	0	0	0	2.3E2	1.709	29134	8011	Sisma Y SLD	0	65.8	0	0	2.3E2	1.709
29135	8012	Sisma X SLV	66.3	0	0	0	2.3E2	1.712	29136	8012	Sisma Y SLV	0	66.3	0	0	2.3E2	1.712
29137	8012	Sisma X SLD	65.3	0	0	0	2.3E2	1.712	29138	8012	Sisma Y SLD	0	65.3	0	0	2.3E2	1.712
29139	8013	Sisma X SLV	66.3	0	0	0	2.3E2	1.712	29140	8013	Sisma Y SLV	0	66.3	0	0	2.3E2	1.712
29141	8013	Sisma X SLD	65.3	0	0	0	2.3E2	1.712	29142	8013	Sisma Y SLD	0	65.3	0	0	2.3E2	1.712
29143	8014	Sisma X SLV	67.8	0	0	0	2.3E2	1.712	29144	8014	Sisma Y SLV	0	67.8	0	0	2.3E2	1.712
29145	8014	Sisma X SLD	66.7	0	0	0	2.3E2	1.712	29146	8014	Sisma Y SLD	0	66.7	0	0	2.3E2	1.712
29147	8015	Sisma X SLV	64.5	0	0	0	2.2E2	1.713	29148	8015	Sisma Y SLV	0	64.5	0	0	2.2E2	1.713
29149	8015	Sisma X SLD	63.5	0	0	0	2.2E2	1.713	29150	8015	Sisma Y SLD	0	63.5	0	0	2.2E2	1.713
29151	8016	Sisma X SLV	66.1	0	0	0	2.3E2	1.719	29152	8016	Sisma Y SLV	0	66.1	0	0	2.3E2	1.719
29153	8016	Sisma X SLD	65	0	0	0	2.3E2	1.719	29154	8016	Sisma Y SLD	0	65	0	0	2.3E2	1.719
29155	8017	Sisma X SLV	65.6	0	0	0	2.2E2	1.719	29156	8017	Sisma Y SLV	0	65.6	0	0	2.2E2	1.719
29157	8017	Sisma X SLD	64.5	0	0	0	2.2E2	1.719	29158	8017	Sisma Y SLD	0	64.5	0	0	2.2E2	1.719
29159	8018	Sisma X SLV	65.6	0	0	0	223.6	1.719	29160	8018	Sisma Y SLV	0	65.6	0	0	223.6	1.719
29161	8018	Sisma X SLD	64.5	0	0	0	223.6	1.719	29162	8018	Sisma Y SLD	0	64.5	0	0	223.6	1.719
29163	8019	Sisma X SLV	65.6	0	0	0	2.2E2	1.719	29164	8019	Sisma Y SLV	0	65.6	0	0	2.2E2	1.719
29165	8019	Sisma X SLD	64.5	0	0	0	2.2E2	1.719	29166	8019	Sisma Y SLD	0	64.5	0	0	2.2E2	1.719
29167	8020	Sisma X SLV	65.6	0	0	0	2.2E2	1.719	29168	8020	Sisma Y SLV	0	65.6	0	0	2.2E2	1.719
29169	8020	Sisma X SLD	64.5	0	0	0	2.2E2	1.719	29170	8020	Sisma Y SLD	0	64.5	0	0	2.2E2	1.719
29171	8021	Sisma X SLV	100.9	0	0	0	3.4E2	1.719	29172	8021	Sisma Y SLV	0	100.9	0	0	3.4E2	1.719
29173	8021	Sisma X SLD	99.3	0	0	0	3.4E2	1.719	29174	8021	Sisma Y SLD	0	99.3	0	0	3.4E2	1.719
29175	8022	Sisma X SLV	101.1	0	0	0	3.4E2	1.719	29176	8022	Sisma Y SLV	0	101.1	0	0	3.4E2	1.719
29177	8022	Sisma X SLD	99.5	0	0	0	3.4E2	1.719	29178	8022	Sisma Y SLD	0	99.5	0	0	3.4E2	1.719
29179	8023	Sisma X SLV	66.8	0	0	0	2.3E2	1.719	29180	8023	Sisma Y SLV	0	66.8	0	0	2.3E2	1.719
29181	8023	Sisma X SLD	65.7	0	0	0	2.3E2	1.719	29182	8023	Sisma Y SLD	0	65.7	0	0	2.3E2	1.719
29183	8024	Sisma X SLV	66.8	0	0	0	2.3E2	1.719	29184	8024	Sisma Y SLV	0	66.8	0	0	2.3E2	1.719
29185	8024	Sisma X SLD	65.7	0	0	0	2.3E2	1.719	29186	8024	Sisma Y SLD	0	65.7	0	0	2.3E2	1.719
29187	8025	Sisma X SLV	66.8	0	0	0	2.3E2	1.719	29188	8025	Sisma Y SLV	0	66.8	0	0	2.3E2	1.719
29189	8025	Sisma X SLD	65.7	0	0	0	2.3E2	1.719	29190	8025	Sisma Y SLD	0	65.7	0	0	2.3E2	1.719
29191	8026	Sisma X SLV	66.8	0	0	0	2.3E2	1.719	29192	8026	Sisma Y SLV	0	66.8	0	0	2.3E2	1.719
29193	8026	Sisma X SLD	65.7	0	0	0	2.3E2	1.719	29194	8026	Sisma Y SLD	0	65.7	0	0	2.3E2	1.719
29195	8027	Sisma X SLV	66.8	0	0	0	2.3E2	1.719	29196	8027	Sisma Y SLV	0	66.8	0	0	2.3E2	1.719
29197	8027	Sisma X SLD	65.7	0	0	0	2.3E2	1.719	29198	8027	Sisma Y SLD	0	65.7	0	0	2.3E2	1.719
29199	8028	Sisma X SLV	66.8	0	0	0	2.3E2	1.719	29200	8028	Sisma Y SLV	0	66.8	0	0	2.3E2	1.719
29201	8028	Sisma X SLD	65.7	0	0	0	2.3E2	1.719	29202	8028	Sisma Y SLD	0	65.7	0	0	2.3E2	1.719
29203	8029	Sisma X SLV	67	0	0	0	2.3E2	1.719	29204	8029	Sisma Y SLV	0	67	0	0	2.3E2	1.719
29205	8029	Sisma X SLD	66	0	0	0	2.3E2	1.719	29206	8029	Sisma Y SLD	0	66	0	0	2.3E2	1.719

Indice	Nodo	Condizione	Fx	Fy	Fz	Mz	Peso	Gamma	Indice	Nodo	Condizione	Fx	Fy	Fz	Mz	Peso	Gamma
29207	8030	Sisma X SLV	66.7	0	0	0	2.3E2	1.719	29208	8030	Sisma Y SLV	0	66.7	0	0	2.3E2	1.719
29209	8030	Sisma X SLD	65.6	0	0	0	2.3E2	1.719	29210	8030	Sisma Y SLD	0	65.6	0	0	2.3E2	1.719
29211	8031	Sisma X SLV	66.7	0	0	0	2.3E2	1.719	29212	8031	Sisma Y SLV	0	66.7	0	0	2.3E2	1.719
29213	8031	Sisma X SLD	65.6	0	0	0	2.3E2	1.719	29214	8031	Sisma Y SLD	0	65.6	0	0	2.3E2	1.719
29215	8032	Sisma X SLV	66.7	0	0	0	2.3E2	1.719	29216	8032	Sisma Y SLV	0	66.7	0	0	2.3E2	1.719
29217	8032	Sisma X SLD	65.6	0	0	0	2.3E2	1.719	29218	8032	Sisma Y SLD	0	65.6	0	0	2.3E2	1.719
29219	8033	Sisma X SLV	115.1	0	0	0	3.9E2	1.719	29220	8033	Sisma Y SLV	0	115.1	0	0	3.9E2	1.719
29221	8033	Sisma X SLD	113.3	0	0	0	3.9E2	1.719	29222	8033	Sisma Y SLD	0	113.3	0	0	3.9E2	1.719
29223	8034	Sisma X SLV	115.3	0	0	0	3.9E2	1.719	29224	8034	Sisma Y SLV	0	115.3	0	0	3.9E2	1.719
29225	8034	Sisma X SLD	113.5	0	0	0	3.9E2	1.719	29226	8034	Sisma Y SLD	0	113.5	0	0	3.9E2	1.719
29227	8035	Sisma X SLV	42.9	0	0	0	146.38	1.719	29228	8035	Sisma Y SLV	0	42.9	0	0	146.38	1.719
29229	8035	Sisma X SLD	42.2	0	0	0	146.38	1.719	29230	8035	Sisma Y SLD	0	42.2	0	0	146.38	1.719
29231	8036	Sisma X SLV	42.9	0	0	0	146.38	1.719	29232	8036	Sisma Y SLV	0	42.9	0	0	146.38	1.719
29233	8036	Sisma X SLD	42.2	0	0	0	146.38	1.719	29234	8036	Sisma Y SLD	0	42.2	0	0	146.38	1.719
29235	8037	Sisma X SLV	42.9	0	0	0	146.38	1.719	29236	8037	Sisma Y SLV	0	42.9	0	0	146.38	1.719
29237	8037	Sisma X SLD	42.2	0	0	0	146.38	1.719	29238	8037	Sisma Y SLD	0	42.2	0	0	146.38	1.719
29239	8038	Sisma X SLV	42.9	0	0	0	146.38	1.719	29240	8038	Sisma Y SLV	0	42.9	0	0	146.38	1.719
29241	8038	Sisma X SLD	42.2	0	0	0	146.38	1.719	29242	8038	Sisma Y SLD	0	42.2	0	0	146.38	1.719
29243	8039	Sisma X SLV	42.9	0	0	0	146.38	1.719	29244	8039	Sisma Y SLV	0	42.9	0	0	146.38	1.719
29245	8039	Sisma X SLD	42.2	0	0	0	146.38	1.719	29246	8039	Sisma Y SLD	0	42.2	0	0	146.38	1.719
29247	8040	Sisma X SLV	42.9	0	0	0	146.38	1.719	29248	8040	Sisma Y SLV	0	42.9	0	0	146.38	1.719
29249	8040	Sisma X SLD	42.2	0	0	0	146.38	1.719	29250	8040	Sisma Y SLD	0	42.2	0	0	146.38	1.719
29251	8041	Sisma X SLV	42.9	0	0	0	1.5E2	1.719	29252	8041	Sisma Y SLV	0	42.9	0	0	1.5E2	1.719
29253	8041	Sisma X SLD	42.2	0	0	0	1.5E2	1.719	29254	8041	Sisma Y SLD	0	42.2	0	0	1.5E2	1.719
29255	8042	Sisma X SLV	42.9	0	0	0	1.5E2	1.719	29256	8042	Sisma Y SLV	0	42.9	0	0	1.5E2	1.719
29257	8042	Sisma X SLD	42.2	0	0	0	1.5E2	1.719	29258	8042	Sisma Y SLD	0	42.2	0	0	1.5E2	1.719
29259	8043	Sisma X SLV	42.9	0	0	0	1.5E2	1.719	29260	8043	Sisma Y SLV	0	42.9	0	0	1.5E2	1.719
29261	8043	Sisma X SLD	42.3	0	0	0	1.5E2	1.719	29262	8043	Sisma Y SLD	0	42.3	0	0	1.5E2	1.719
29263	8044	Sisma X SLV	43	0	0	0	1.5E2	1.719	29264	8044	Sisma Y SLV	0	43	0	0	1.5E2	1.719
29265	8044	Sisma X SLD	42.3	0	0	0	1.5E2	1.719	29266	8044	Sisma Y SLD	0	42.3	0	0	1.5E2	1.719
29267	8045	Sisma X SLV	43	0	0	0	1.5E2	1.719	29268	8045	Sisma Y SLV	0	43	0	0	1.5E2	1.719
29269	8045	Sisma X SLD	42.3	0	0	0	1.5E2	1.719	29270	8045	Sisma Y SLD	0	42.3	0	0	1.5E2	1.719
29271	8046	Sisma X SLV	43.1	0	0	0	1.5E2	1.719	29272	8046	Sisma Y SLV	0	43.1	0	0	1.5E2	1.719
29273	8046	Sisma X SLD	42.4	0	0	0	1.5E2	1.719	29274	8046	Sisma Y SLD	0	42.4	0	0	1.5E2	1.719
29275	8047	Sisma X SLV	43.1	0	0	0	1.5E2	1.719	29276	8047	Sisma Y SLV	0	43.1	0	0	1.5E2	1.719
29277	8047	Sisma X SLD	42.4	0	0	0	1.5E2	1.719	29278	8047	Sisma Y SLD	0	42.4	0	0	1.5E2	1.719
29279	8048	Sisma X SLV	90	0	0	0	3.1E2	1.719	29280	8048	Sisma Y SLV	0	90	0	0	3.1E2	1.719
29281	8048	Sisma X SLD	88.6	0	0	0	3.1E2	1.719	29282	8048	Sisma Y SLD	0	88.6	0	0	3.1E2	1.719
29283	8049	Sisma X SLV	67.9	0	0	0	2.3E2	1.719	29284	8049	Sisma Y SLV	0	67.9	0	0	2.3E2	1.719
29285	8049	Sisma X SLD	66.9	0	0	0	2.3E2	1.719	29286	8049	Sisma Y SLD	0	66.9	0	0	2.3E2	1.719
29287	8050	Sisma X SLV	106.1	0	0	0	3.6E2	1.719	29288	8050	Sisma Y SLV	0	106.1	0	0	3.6E2	1.719
29289	8050	Sisma X SLD	104.4	0	0	0	3.6E2	1.719	29290	8050	Sisma Y SLD	0	104.4	0	0	3.6E2	1.719
29291	8051	Sisma X SLV	66.8	0	0	0	2.3E2	1.719	29292	8051	Sisma Y SLV	0	66.8	0	0	2.3E2	1.719
29293	8051	Sisma X SLD	65.7	0	0	0	2.3E2	1.719	29294	8051	Sisma Y SLD	0	65.7	0	0	2.3E2	1.719
29295	8052	Sisma X SLV	66.8	0	0	0	2.3E2	1.719	29296	8052	Sisma Y SLV	0	66.8	0	0	2.3E2	1.719
29297	8052	Sisma X SLD	65.7	0	0	0	2.3E2	1.719	29298	8052	Sisma Y SLD	0	65.7	0	0	2.3E2	1.719
29299	8053	Sisma X SLV	66.8	0	0	0	2.3E2	1.719	29300	8053	Sisma Y SLV	0	66.8	0	0	2.3E2	1.719
29301	8053	Sisma X SLD	65.7	0	0	0	2.3E2	1.719	29302	8053	Sisma Y SLD	0	65.7	0	0	2.3E2	1.719
29303	8054	Sisma X SLV	66.8	0	0	0	2.3E2	1.719	29304	8054	Sisma Y SLV	0	66.8	0	0	2.3E2	1.719
29305	8054	Sisma X SLD	65.7	0	0	0	2.3E2	1.719	29306	8054	Sisma Y SLD	0	65.7	0	0	2.3E2	1.719
29307	8055	Sisma X SLV	66.8	0	0	0	2.3E2	1.719	29308	8055	Sisma Y SLV	0	66.8	0	0	2.3E2	1.719
29309	8055	Sisma X SLD	65.7	0	0	0	2.3E2	1.719	29310	8055	Sisma Y SLD	0	65.7	0	0	2.3E2	1.719
29311	8056	Sisma X SLV	66.8	0	0	0	2.3E2	1.719	29312	8056	Sisma Y SLV	0	66.8	0	0	2.3E2	1.719
29313	8056	Sisma X SLD	65.7	0	0	0	2.3E2	1.719	29314	8056	Sisma Y SLD	0	65.7	0	0	2.3E2	1.719
29315	8057	Sisma X SLV	68.9	0	0	0	2.4E2	1.719	29316	8057	Sisma Y SLV	0	68.9	0	0	2.4E2	1.719
29317	8057	Sisma X SLD	67.8	0	0	0	2.4E2	1.719	29318	8057	Sisma Y SLD	0	67.8	0	0	2.4E2	1.719
29319	8058	Sisma X SLV	65.9	0	0	0	2.2E2	1.719	29320	8058	Sisma Y SLV	0	65.9	0	0	2.2E2	1.719
29321	8058	Sisma X SLD	64.8	0	0	0	2.2E2	1.719	29322	8058	Sisma Y SLD	0	64.8	0	0	2.2E2	1.719
29323	8059	Sisma X SLV	65.6	0	0	0	2.2E2	1.719	29324	8059	Sisma Y SLV	0	65.6	0	0	2.2E2	1.719
29325	8059	Sisma X SLD	64.5	0	0	0	2.2E2	1.719	29326	8059	Sisma Y SLD	0	64.5	0	0	2.2E2	1.719
29327	8060	Sisma X SLV	66.8	0	0	0	2.3E2	1.719	29328	8060	Sisma Y SLV	0	66.8	0	0	2.3E2	1.719
29329	8060	Sisma X SLD	65.7	0	0	0	2.3E2	1.719	29330	8060	Sisma Y SLD	0	65.7	0	0	2.3E2	1.719
29331	8061	Sisma X SLV	66.9	0	0	0	228.26	1.719	29332	8061	Sisma Y SLV	0	66.9	0	0	228.26	1.719
29333	8061	Sisma X SLD	65.9	0	0	0	228.26	1.719	29334	8061	Sisma Y SLD	0	65.9	0	0	228.26	1.719
29335	8062	Sisma X SLV	66.7	0	0	0	2.3E2	1.719	29336	8062	Sisma Y SLV	0	66.7	0	0	2.3E2	1.719
29337	8062	Sisma X SLD	65.6	0	0	0	2.3E2	1.719	29338	8062	Sisma Y SLD	0	65.6	0	0	2.3E2	1.719
29339	8063	Sisma X SLV	66.8	0	0	0	2.3E2	1.719	29340	8063	Sisma Y SLV	0	66.8	0	0	2.3E2	1.719
29341	8063	Sisma X SLD	65.7	0	0	0	2.3E2	1.719	29342	8063	Sisma Y SLD	0	65.7	0	0	2.3E2	1.719
29343	8064	Sisma X SLV	67.1	0	0	0	2.3E2	1.719	29344	8064	Sisma Y SLV	0	67.1	0	0	2.3E2	1.719
29345	8064	Sisma X SLD	66	0	0	0	2.3E2	1.719	29346	8064	Sisma Y SLD	0	66	0	0	2.3E2	1.719
29347	8065	Sisma X SLV	65.8	0	0	0	224.28	1.719	29348	8065	Sisma Y SLV	0	65.8	0	0	224.28	1.719
29349	8065	Sisma X SLD	64.7	0	0	0	224.28	1.719	29350	8065	Sisma Y SLD	0	64.7	0	0	224.28	1.719
29351	8066	Sisma X SLV	65.6	0	0	0	2.2E2	1.719	29352	8066	Sisma Y SLV	0	65.6	0	0	2.2E2	1.719
29353	8066	Sisma X SLD	64.5	0	0	0	2.2E2	1.719	29354	8066	Sisma Y SLD	0	64.5	0	0	2.2E2	1.719
29355	8067	Sisma X SLV	66.8	0	0	0	2.3E2	1.719	29356	8067	Sisma Y SLV	0	66.8	0	0	2.3E2	1.719
29357	8067	Sisma X SLD	65.7	0	0	0	2.3E2	1.719	29358	8067	Sisma Y SLD	0	65.7	0	0	2.3E2	1.719
29359	8068	Sisma X SLV	67.1	0	0	0	2.3E2	1.719	29360	8068	Sisma Y SLV	0	67.1	0	0	2.3E2	1.719
29361	8068	Sisma X SLD	66	0	0	0	2.3E2	1.719	29362	8068	Sisma Y SLD	0	66	0	0	2.3E2	1.719
29363	8069	Sisma X SLV	66.8	0	0	0	2.3E2	1.719	29364	8069	Sisma Y SLV	0	66.8	0	0	2.3E2	1.719
29365	8069	Sisma X SLD	65.8	0	0	0	2.3E2	1.719	29366	8069	Sisma Y SLD	0	65.8	0	0	2.3E2	1.719
29367	8070	Sisma X SLV	66.7	0	0	0	2.3E2	1.719	29368	8070	Sisma Y SLV	0	66.7	0	0	2.3E2	1.719
29369	8070	Sisma X SLD	65.6	0	0	0	2.3E2	1.719	29370	8070	Sisma Y SLD	0	65.6	0	0	2.3E2	1.719
29371	8071	Sisma X SLV	66.8	0	0	0	2.3E2	1.719	29372	8071	Sisma Y SLV	0	66.8	0	0	2.3E2	1.719
29373	8071	Sisma X SLD	65.7	0	0	0	2.3E2	1.719	29374	8071	Sisma Y SLD	0	65.7	0	0	2.3E2	1.719
29375	8072	Sisma X SLV	67	0	0	0	2.3E2	1.719	29376	8072	Sisma Y SLV	0	67	0	0	2.3E2	1.719
29377	8072	Sisma X SLD	65.9	0	0	0	2.3E2	1.719	29378	8072	Sisma Y SLD	0	65.9	0	0	2.3E2	1.719
29379	8073	Sisma X SLV	65.7	0	0	0	2.2E2	1.719	29380	8073	Sisma Y SLV	0	65.7	0	0	2.2E2	1.719
29381	8073	Sisma X SLD	64.6	0	0	0	2.2E2	1.719	29382	8073	Sisma Y SLD	0	64.6	0	0	2.2E2	1.719
29383	8074	Sisma X SLV	65.6	0	0	0	2.2E2	1.719	29384	8074	Sisma Y SLV	0	65.6	0	0	2.2E2	1.719
29385	8074	Sisma X SLD	64.5	0	0	0	2.2E2	1.719	29386	8074	Sisma Y SLD	0	64.5	0	0	2.2E2	1.719
29387	8075	Sisma X SLV	66.8	0	0	0	2.3E2	1.719	29388	8075	Sisma Y SLV	0	66.8	0	0	2.3E2	1.719
29389	8075	Sisma X SLD	65.7	0	0	0	2.3E2	1.719	29390	8075	Sisma Y SLD	0	65.7	0	0	2.3E2	1.719
29391	8076	Sisma X SLV	67	0	0	0	2.3E2	1.719	29392	8076	Sisma Y SLV	0	67	0	0	2.3E2	1.719
29393	8076	Sisma X SLD	65.9	0	0	0	2.3E2	1.719	29394	8076	Sisma Y SLD	0	65.9	0	0	2.3E2	1.719
29395	8077	Sisma X SLV	66.7	0	0	0	2.3E2	1.719	29396	8077	Sisma Y SLV	0	66.7	0	0	2.3E2	1.719
29397	8077	Sisma X SLD	65.7	0	0	0	2.3E2	1.719	29398	8077	Sisma Y SLD	0	65.7	0	0	2.3E2	1.719
29399	8078	Sisma X SLV	66.7	0	0	0	2.3E2	1.719	29400	8078	Sisma Y SLV	0	66.7	0	0	2.3E2	1.719
29401	8078	Sisma X SLD	65.6	0	0	0	2.3E2	1.719	29402	8078	Sisma Y SLD	0	65.6	0	0	2.3E2	1.719
29403	8079	Sisma X SLV	66.8	0	0	0	2.3E2	1.719	29404	8079	Sisma Y SLV	0	66.8	0	0	2.3E2	1.719
29405	8079	Sisma X SLD	65.7	0	0	0	2.3E2	1.719	29406	8079	Sisma Y SLD	0	65.7	0	0	2.3E2	1.719
29407	8080	Sisma X SLV	66.9	0	0	0	2.3E2	1.719	29408	8080	Sisma Y SLV	0	66.9	0	0	2.3E2	1.719
29409	8080	Sisma X SLD	65.8	0	0	0	2.3E2	1.719	29410	8080	Sisma Y SLD	0	65.8	0	0	2.3E2	1.719
29411	8081	Sisma X SLV	66.8	0	0	0	2.3E2	1.719	29412	8081	Sisma Y SLV	0	66.8	0	0	2.3E2	1.719
29413	8081	Sisma X SLD	65.8	0	0	0	2.3E2	1.719	29414	8081	Sisma Y SLD	0	65.8	0	0	2.3E2	1.719

Indice	Nodo	Condizione	Fx	Fy	Fz	Mz	Peso	Gamma	Indice	Nodo	Condizione	Fx	Fy	Fz	Mz	Peso	Gamma
29415	8082	Sisma X SLV	65.6	0	0	0	2.2E2	1.719	29416	8082	Sisma Y SLV	0	65.6	0	0	2.2E2	1.719
29417	8082	Sisma X SLD	64.6	0	0	0	2.2E2	1.719	29418	8082	Sisma Y SLD	0	64.6	0	0	2.2E2	1.719
29419	8083	Sisma X SLV	65.6	0	0	0	223.6	1.719	29420	8083	Sisma Y SLV	0	65.6	0	0	223.6	1.719
29421	8083	Sisma X SLD	64.5	0	0	0	223.6	1.719	29422	8083	Sisma Y SLD	0	64.5	0	0	223.6	1.719
29423	8084	Sisma X SLV	66.8	0	0	0	2.3E2	1.719	29424	8084	Sisma Y SLV	0	66.8	0	0	2.3E2	1.719
29425	8084	Sisma X SLD	65.8	0	0	0	2.3E2	1.719	29426	8084	Sisma Y SLD	0	65.8	0	0	2.3E2	1.719
29427	8085	Sisma X SLV	66.9	0	0	0	2.3E2	1.719	29428	8085	Sisma Y SLV	0	66.9	0	0	2.3E2	1.719
29429	8085	Sisma X SLD	65.8	0	0	0	2.3E2	1.719	29430	8085	Sisma Y SLD	0	65.8	0	0	2.3E2	1.719
29431	8086	Sisma X SLV	66.7	0	0	0	2.3E2	1.719	29432	8086	Sisma Y SLV	0	66.7	0	0	2.3E2	1.719
29433	8086	Sisma X SLD	65.6	0	0	0	2.3E2	1.719	29434	8086	Sisma Y SLD	0	65.6	0	0	2.3E2	1.719
29435	8087	Sisma X SLV	66.7	0	0	0	2.3E2	1.719	29436	8087	Sisma Y SLV	0	66.7	0	0	2.3E2	1.719
29437	8087	Sisma X SLD	65.6	0	0	0	2.3E2	1.719	29438	8087	Sisma Y SLD	0	65.6	0	0	2.3E2	1.719
29439	8088	Sisma X SLV	65.6	0	0	0	2.2E2	1.719	29440	8088	Sisma Y SLV	0	65.6	0	0	2.2E2	1.719
29441	8088	Sisma X SLD	64.5	0	0	0	2.2E2	1.719	29442	8088	Sisma Y SLD	0	64.5	0	0	2.2E2	1.719
29443	8089	Sisma X SLV	42.1	0	0	0	1.4E2	1.719	29444	8089	Sisma Y SLV	0	42.1	0	0	1.4E2	1.719
29445	8089	Sisma X SLD	41.5	0	0	0	1.4E2	1.719	29446	8089	Sisma Y SLD	0	41.5	0	0	1.4E2	1.719
29447	8090	Sisma X SLV	70.7	0	0	0	2.4E2	1.719	29448	8090	Sisma Y SLV	0	70.7	0	0	2.4E2	1.719
29449	8090	Sisma X SLD	69.6	0	0	0	2.4E2	1.719	29450	8090	Sisma Y SLD	0	69.6	0	0	2.4E2	1.719
29451	8091	Sisma X SLV	70.7	0	0	0	2.4E2	1.719	29452	8091	Sisma Y SLV	0	70.7	0	0	2.4E2	1.719
29453	8091	Sisma X SLD	69.6	0	0	0	2.4E2	1.719	29454	8091	Sisma Y SLD	0	69.6	0	0	2.4E2	1.719
29455	8092	Sisma X SLV	70.1	0	0	0	2.4E2	1.719	29456	8092	Sisma Y SLV	0	70.1	0	0	2.4E2	1.719
29457	8092	Sisma X SLD	69	0	0	0	2.4E2	1.719	29458	8092	Sisma Y SLD	0	69	0	0	2.4E2	1.719
29459	8093	Sisma X SLV	65.1	0	0	0	2.2E2	1.719	29460	8093	Sisma Y SLV	0	65.1	0	0	2.2E2	1.719
29461	8093	Sisma X SLD	64.1	0	0	0	2.2E2	1.719	29462	8093	Sisma Y SLD	0	64.1	0	0	2.2E2	1.719
29463	8094	Sisma X SLV	42.1	0	0	0	1.4E2	1.719	29464	8094	Sisma Y SLV	0	42.1	0	0	1.4E2	1.719
29465	8094	Sisma X SLD	41.5	0	0	0	1.4E2	1.719	29466	8094	Sisma Y SLD	0	41.5	0	0	1.4E2	1.719
29467	8095	Sisma X SLV	66.3	0	0	0	2.3E2	1.719	29468	8095	Sisma Y SLV	0	66.3	0	0	2.3E2	1.719
29469	8095	Sisma X SLD	65.2	0	0	0	2.3E2	1.719	29470	8095	Sisma Y SLD	0	65.2	0	0	2.3E2	1.719
29471	8096	Sisma X SLV	70.6	0	0	0	2.4E2	1.719	29472	8096	Sisma Y SLV	0	70.6	0	0	2.4E2	1.719
29473	8096	Sisma X SLD	69.5	0	0	0	2.4E2	1.719	29474	8096	Sisma Y SLD	0	69.5	0	0	2.4E2	1.719
29475	8097	Sisma X SLV	70.6	0	0	0	2.4E2	1.719	29476	8097	Sisma Y SLV	0	70.6	0	0	2.4E2	1.719
29477	8097	Sisma X SLD	69.4	0	0	0	2.4E2	1.719	29478	8097	Sisma Y SLD	0	69.4	0	0	2.4E2	1.719
29479	8098	Sisma X SLV	70	0	0	0	2.4E2	1.719	29480	8098	Sisma Y SLV	0	70	0	0	2.4E2	1.719
29481	8098	Sisma X SLD	68.9	0	0	0	2.4E2	1.719	29482	8098	Sisma Y SLD	0	68.9	0	0	2.4E2	1.719
29483	8099	Sisma X SLV	42.1	0	0	0	1.4E2	1.719	29484	8099	Sisma Y SLV	0	42.1	0	0	1.4E2	1.719
29485	8099	Sisma X SLD	41.4	0	0	0	1.4E2	1.719	29486	8099	Sisma Y SLD	0	41.4	0	0	1.4E2	1.719
29487	8100	Sisma X SLV	69.4	0	0	0	2.4E2	1.719	29488	8100	Sisma Y SLV	0	69.4	0	0	2.4E2	1.719
29489	8100	Sisma X SLD	68.3	0	0	0	2.4E2	1.719	29490	8100	Sisma Y SLD	0	68.3	0	0	2.4E2	1.719
29491	8101	Sisma X SLV	65.2	0	0	0	2.2E2	1.719	29492	8101	Sisma Y SLV	0	65.2	0	0	2.2E2	1.719
29493	8101	Sisma X SLD	64.2	0	0	0	2.2E2	1.719	29494	8101	Sisma Y SLD	0	64.2	0	0	2.2E2	1.719
29495	8102	Sisma X SLV	70.4	0	0	0	2.4E2	1.719	29496	8102	Sisma Y SLV	0	70.4	0	0	2.4E2	1.719
29497	8102	Sisma X SLD	69.3	0	0	0	2.4E2	1.719	29498	8102	Sisma Y SLD	0	69.3	0	0	2.4E2	1.719
29499	8103	Sisma X SLV	70.4	0	0	0	2.4E2	1.719	29500	8103	Sisma Y SLV	0	70.4	0	0	2.4E2	1.719
29501	8103	Sisma X SLD	69.3	0	0	0	2.4E2	1.719	29502	8103	Sisma Y SLD	0	69.3	0	0	2.4E2	1.719
29503	8104	Sisma X SLV	42.1	0	0	0	1.4E2	1.719	29504	8104	Sisma Y SLV	0	42.1	0	0	1.4E2	1.719
29505	8104	Sisma X SLD	41.4	0	0	0	1.4E2	1.719	29506	8104	Sisma Y SLD	0	41.4	0	0	1.4E2	1.719
29507	8105	Sisma X SLV	66.3	0	0	0	2.3E2	1.719	29508	8105	Sisma Y SLV	0	66.3	0	0	2.3E2	1.719
29509	8105	Sisma X SLD	65.2	0	0	0	2.3E2	1.719	29510	8105	Sisma Y SLD	0	65.2	0	0	2.3E2	1.719
29511	8106	Sisma X SLV	69.9	0	0	0	2.4E2	1.719	29512	8106	Sisma Y SLV	0	69.9	0	0	2.4E2	1.719
29513	8106	Sisma X SLD	68.8	0	0	0	2.4E2	1.719	29514	8106	Sisma Y SLD	0	68.8	0	0	2.4E2	1.719
29515	8107	Sisma X SLV	42.1	0	0	0	1.4E2	1.719	29516	8107	Sisma Y SLV	0	42.1	0	0	1.4E2	1.719
29517	8107	Sisma X SLD	41.4	0	0	0	1.4E2	1.719	29518	8107	Sisma Y SLD	0	41.4	0	0	1.4E2	1.719
29519	8108	Sisma X SLV	70.3	0	0	0	2.4E2	1.719	29520	8108	Sisma Y SLV	0	70.3	0	0	2.4E2	1.719
29521	8108	Sisma X SLD	69.2	0	0	0	2.4E2	1.719	29522	8108	Sisma Y SLD	0	69.2	0	0	2.4E2	1.719
29523	8109	Sisma X SLV	70.3	0	0	0	2.4E2	1.719	29524	8109	Sisma Y SLV	0	70.3	0	0	2.4E2	1.719
29525	8109	Sisma X SLD	69.2	0	0	0	2.4E2	1.719	29526	8109	Sisma Y SLD	0	69.2	0	0	2.4E2	1.719
29527	8110	Sisma X SLV	65.4	0	0	0	2.2E2	1.719	29528	8110	Sisma Y SLV	0	65.4	0	0	2.2E2	1.719
29529	8110	Sisma X SLD	64.3	0	0	0	2.2E2	1.719	29530	8110	Sisma Y SLD	0	64.3	0	0	2.2E2	1.719
29531	8111	Sisma X SLV	69.9	0	0	0	2.4E2	1.719	29532	8111	Sisma Y SLV	0	69.9	0	0	2.4E2	1.719
29533	8111	Sisma X SLD	68.8	0	0	0	2.4E2	1.719	29534	8111	Sisma Y SLD	0	68.8	0	0	2.4E2	1.719
29535	8112	Sisma X SLV	42.1	0	0	0	1.4E2	1.719	29536	8112	Sisma Y SLV	0	42.1	0	0	1.4E2	1.719
29537	8112	Sisma X SLD	41.4	0	0	0	1.4E2	1.719	29538	8112	Sisma Y SLD	0	41.4	0	0	1.4E2	1.719
29539	8113	Sisma X SLV	66.2	0	0	0	2.3E2	1.719	29540	8113	Sisma Y SLV	0	66.2	0	0	2.3E2	1.719
29541	8113	Sisma X SLD	65.2	0	0	0	2.3E2	1.719	29542	8113	Sisma Y SLD	0	65.2	0	0	2.3E2	1.719
29543	8114	Sisma X SLV	70.3	0	0	0	2.4E2	1.719	29544	8114	Sisma Y SLV	0	70.3	0	0	2.4E2	1.719
29545	8114	Sisma X SLD	69.2	0	0	0	2.4E2	1.719	29546	8114	Sisma Y SLD	0	69.2	0	0	2.4E2	1.719
29547	8115	Sisma X SLV	70.3	0	0	0	2.4E2	1.719	29548	8115	Sisma Y SLV	0	70.3	0	0	2.4E2	1.719
29549	8115	Sisma X SLD	69.2	0	0	0	2.4E2	1.719	29550	8115	Sisma Y SLD	0	69.2	0	0	2.4E2	1.719
29551	8116	Sisma X SLV	65.6	0	0	0	2.2E2	1.719	29552	8116	Sisma Y SLV	0	65.6	0	0	2.2E2	1.719
29553	8116	Sisma X SLD	64.5	0	0	0	2.2E2	1.719	29554	8116	Sisma Y SLD	0	64.5	0	0	2.2E2	1.719
29555	8117	Sisma X SLV	69.3	0	0	0	236.25	1.719	29556	8117	Sisma Y SLV	0	69.3	0	0	236.25	1.719
29557	8117	Sisma X SLD	68.2	0	0	0	236.25	1.719	29558	8117	Sisma Y SLD	0	68.2	0	0	236.25	1.719
29559	8118	Sisma X SLV	42.1	0	0	0	1.4E2	1.719	29560	8118	Sisma Y SLV	0	42.1	0	0	1.4E2	1.719
29561	8118	Sisma X SLD	41.4	0	0	0	1.4E2	1.719	29562	8118	Sisma Y SLD	0	41.4	0	0	1.4E2	1.719
29563	8119	Sisma X SLV	69.9	0	0	0	2.4E2	1.719	29564	8119	Sisma Y SLV	0	69.9	0	0	2.4E2	1.719
29565	8119	Sisma X SLD	68.8	0	0	0	2.4E2	1.719	29566	8119	Sisma Y SLD	0	68.8	0	0	2.4E2	1.719
29567	8120	Sisma X SLV	65.7	0	0	0	2.2E2	1.719	29568	8120	Sisma Y SLV	0	65.7	0	0	2.2E2	1.719
29569	8120	Sisma X SLD	64.6	0	0	0	2.2E2	1.719	29570	8120	Sisma Y SLD	0	64.6	0	0	2.2E2	1.719
29571	8121	Sisma X SLV	66.2	0	0	0	2.3E2	1.719	29572	8121	Sisma Y SLV	0	66.2	0	0	2.3E2	1.719
29573	8121	Sisma X SLD	65.2	0	0	0	2.3E2	1.719	29574	8121	Sisma Y SLD	0	65.2	0	0	2.3E2	1.719
29575	8122	Sisma X SLV	70.2	0	0	0	2.4E2	1.719	29576	8122	Sisma Y SLV	0	70.2	0	0	2.4E2	1.719
29577	8122	Sisma X SLD	69.1	0	0	0	2.4E2	1.719	29578	8122	Sisma Y SLD	0	69.1	0	0	2.4E2	1.719
29579	8123	Sisma X SLV	70.2	0	0	0	2.4E2	1.719	29580	8123	Sisma Y SLV	0	70.2	0	0	2.4E2	1.719
29581	8123	Sisma X SLD	69.1	0	0	0	2.4E2	1.719	29582	8123	Sisma Y SLD	0	69.1	0	0	2.4E2	1.719
29583	8124	Sisma X SLV	65.7	0	0	0	224.01	1.719	29584	8124	Sisma Y SLV	0	65.7	0	0	224.01	1.719
29585	8124	Sisma X SLD	64.7	0	0	0	224.01	1.719	29586	8124	Sisma Y SLD	0	64.7	0	0	224.01	1.719
29587	8125	Sisma X SLV	42	0	0	0	1.4E2	1.719	29588	8125	Sisma Y SLV	0	42	0	0	1.4E2	1.719
29589	8125	Sisma X SLD	41.4	0	0	0	1.4E2	1.719	29590	8125	Sisma Y SLD	0	41.4	0	0	1.4E2	1.719
29591	8126	Sisma X SLV	65.7	0	0	0	2.2E2	1.719	29592	8126	Sisma Y SLV	0	65.7	0	0	2.2E2	1.719
29593	8126	Sisma X SLD	64.6	0	0	0	2.2E2	1.719	29594	8126	Sisma Y SLD	0	64.6	0	0	2.2E2	1.719
29595	8127	Sisma X SLV	70	0	0	0	2.4E2	1.719	29596	8127	Sisma Y SLV	0	70	0	0	2.4E2	1.719
29597	8127	Sisma X SLD	68.9	0	0	0	2.4E2	1.719	29598	8127	Sisma Y SLD	0	68.9	0	0	2.4E2	1.719
29599	8128	Sisma X SLV	65.6	0	0	0	2.2E2	1.719	29600	8128	Sisma Y SLV	0	65.6	0	0	2.2E2	1.719
29601	8128	Sisma X SLD	64.6	0	0	0	2.2E2	1.719	29602	8128	Sisma Y SLD	0	64.6	0	0	2.2E2	1.719
29603	8129	Sisma X SLV	66.2	0	0	0	2.3E2	1.719	29604	8129	Sisma Y SLV	0	66.2	0	0	2.3E2	1.719
29605	8129	Sisma X SLD	65.2	0	0	0	2.3E2	1.719	29606	8129	Sisma Y SLD	0	65.2	0	0	2.3E2	1.719
29607	8130	Sisma X SLV	70.2	0	0	0	2.4E2	1.719	29608	8130	Sisma Y SLV	0	70.2	0	0	2.4E2	1.719
29609	8130	Sisma X SLD	69.1	0	0	0	2.4E2	1.719	29610	8130	Sisma Y SLD	0	69.1	0	0	2.4E2	1.719
29611	8131	Sisma X SLV	70.2	0	0	0	2.4E2	1.719	29612	8131	Sisma Y SLV	0	70.2	0	0	2.4E2	1.719
29613	8131	Sisma X SLD	69.1	0	0	0	2.4E2	1.719	29614	8131	Sisma Y SLD	0	69.1	0	0	2.4E2	1.719
29615	8132	Sisma X SLV	42	0	0	0	1.4E2	1.719	29616	8132	Sisma Y SLV	0	42	0	0	1.4E2	1.719

Indice	Nodo	Condizione	Fx	Fy	Fz	Mz	Peso	Gamma	Indice	Nodo	Condizione	Fx	Fy	Fz	Mz	Peso	Gamma
29617	8132	Sisma X SLD	41.4	0	0	0	1.4E2	1.719	29618	8132	Sisma Y SLD	0	41.4	0	0	1.4E2	1.719
29619	8133	Sisma X SLV	65.5	0	0	0	2.2E2	1.719	29620	8133	Sisma Y SLV	0	65.5	0	0	2.2E2	1.719
29621	8133	Sisma X SLD	64.5	0	0	0	2.2E2	1.719	29622	8133	Sisma Y SLD	0	64.5	0	0	2.2E2	1.719
29623	8134	Sisma X SLV	66.3	0	0	0	2.3E2	1.719	29624	8134	Sisma Y SLV	0	66.3	0	0	2.3E2	1.719
29625	8134	Sisma X SLD	65.2	0	0	0	2.3E2	1.719	29626	8134	Sisma Y SLD	0	65.2	0	0	2.3E2	1.719
29627	8135	Sisma X SLV	65.5	0	0	0	2.2E2	1.719	29628	8135	Sisma Y SLV	0	65.5	0	0	2.2E2	1.719
29629	8135	Sisma X SLD	64.4	0	0	0	2.2E2	1.719	29630	8135	Sisma Y SLD	0	64.4	0	0	2.2E2	1.719
29631	8136	Sisma X SLV	70.3	0	0	0	2.4E2	1.719	29632	8136	Sisma Y SLV	0	70.3	0	0	2.4E2	1.719
29633	8136	Sisma X SLD	69.2	0	0	0	2.4E2	1.719	29634	8136	Sisma Y SLD	0	69.2	0	0	2.4E2	1.719
29635	8137	Sisma X SLV	42	0	0	0	1.4E2	1.719	29636	8137	Sisma Y SLV	0	42	0	0	1.4E2	1.719
29637	8137	Sisma X SLD	41.4	0	0	0	1.4E2	1.719	29638	8137	Sisma Y SLD	0	41.4	0	0	1.4E2	1.719
29639	8138	Sisma X SLV	70.2	0	0	0	239.27	1.719	29640	8138	Sisma Y SLV	0	70.2	0	0	239.27	1.719
29641	8138	Sisma X SLD	69.1	0	0	0	239.27	1.719	29642	8138	Sisma Y SLD	0	69.1	0	0	239.27	1.719
29643	8139	Sisma X SLV	70.2	0	0	0	2.4E2	1.719	29644	8139	Sisma Y SLV	0	70.2	0	0	2.4E2	1.719
29645	8139	Sisma X SLD	69.1	0	0	0	2.4E2	1.719	29646	8139	Sisma Y SLD	0	69.1	0	0	2.4E2	1.719
29647	8140	Sisma X SLV	66.4	0	0	0	226.26	1.719	29648	8140	Sisma Y SLV	0	66.4	0	0	226.26	1.719
29649	8140	Sisma X SLD	65.3	0	0	0	226.26	1.719	29650	8140	Sisma Y SLD	0	65.3	0	0	226.26	1.719
29651	8141	Sisma X SLV	65.4	0	0	0	2.2E2	1.719	29652	8141	Sisma Y SLV	0	65.4	0	0	2.2E2	1.719
29653	8141	Sisma X SLD	64.4	0	0	0	2.2E2	1.719	29654	8141	Sisma Y SLD	0	64.4	0	0	2.2E2	1.719
29655	8142	Sisma X SLV	42.1	0	0	0	143.41	1.719	29656	8142	Sisma Y SLV	0	42.1	0	0	143.41	1.719
29657	8142	Sisma X SLD	41.4	0	0	0	143.41	1.719	29658	8142	Sisma Y SLD	0	41.4	0	0	143.41	1.719
29659	8143	Sisma X SLV	70.6	0	0	0	240.71	1.719	29660	8143	Sisma Y SLV	0	70.6	0	0	240.71	1.719
29661	8143	Sisma X SLD	69.5	0	0	0	240.71	1.719	29662	8143	Sisma Y SLD	0	69.5	0	0	240.71	1.719
29663	8144	Sisma X SLV	66.5	0	0	0	2.3E2	1.719	29664	8144	Sisma Y SLV	0	66.5	0	0	2.3E2	1.719
29665	8144	Sisma X SLD	65.5	0	0	0	2.3E2	1.719	29666	8144	Sisma Y SLD	0	65.5	0	0	2.3E2	1.719
29667	8145	Sisma X SLV	44.5	0	0	0	1.5E2	1.719	29668	8145	Sisma Y SLV	0	44.5	0	0	1.5E2	1.719
29669	8145	Sisma X SLD	43.8	0	0	0	1.5E2	1.719	29670	8145	Sisma Y SLD	0	43.8	0	0	1.5E2	1.719
29671	8146	Sisma X SLV	69.2	0	0	0	2.4E2	1.719	29672	8146	Sisma Y SLV	0	69.2	0	0	2.4E2	1.719
29673	8146	Sisma X SLD	68.1	0	0	0	2.4E2	1.719	29674	8146	Sisma Y SLD	0	68.1	0	0	2.4E2	1.719
29675	8147	Sisma X SLV	70.1	0	0	0	2.4E2	1.719	29676	8147	Sisma Y SLV	0	70.1	0	0	2.4E2	1.719
29677	8147	Sisma X SLD	69	0	0	0	2.4E2	1.719	29678	8147	Sisma Y SLD	0	69	0	0	2.4E2	1.719
29679	8148	Sisma X SLV	70.2	0	0	0	2.4E2	1.719	29680	8148	Sisma Y SLV	0	70.2	0	0	2.4E2	1.719
29681	8148	Sisma X SLD	69	0	0	0	2.4E2	1.719	29682	8148	Sisma Y SLD	0	69	0	0	2.4E2	1.719
29683	8149	Sisma X SLV	65.4	0	0	0	2.2E2	1.719	29684	8149	Sisma Y SLV	0	65.4	0	0	2.2E2	1.719
29685	8149	Sisma X SLD	64.3	0	0	0	2.2E2	1.719	29686	8149	Sisma Y SLD	0	64.3	0	0	2.2E2	1.719
29687	8150	Sisma X SLV	66.8	0	0	0	2.3E2	1.719	29688	8150	Sisma Y SLV	0	66.8	0	0	2.3E2	1.719
29689	8150	Sisma X SLD	65.7	0	0	0	2.3E2	1.719	29690	8150	Sisma Y SLD	0	65.7	0	0	2.3E2	1.719
29691	8151	Sisma X SLV	42.1	0	0	0	143.58	1.719	29692	8151	Sisma Y SLV	0	42.1	0	0	143.58	1.719
29693	8151	Sisma X SLD	41.4	0	0	0	143.58	1.719	29694	8151	Sisma Y SLD	0	41.4	0	0	143.58	1.719
29695	8152	Sisma X SLV	70.9	0	0	0	241.79	1.719	29696	8152	Sisma Y SLV	0	70.9	0	0	241.79	1.719
29697	8152	Sisma X SLD	69.8	0	0	0	241.79	1.719	29698	8152	Sisma Y SLD	0	69.8	0	0	241.79	1.719
29699	8153	Sisma X SLV	67.1	0	0	0	2.3E2	1.719	29700	8153	Sisma Y SLV	0	67.1	0	0	2.3E2	1.719
29701	8153	Sisma X SLD	66	0	0	0	2.3E2	1.719	29702	8153	Sisma Y SLD	0	66	0	0	2.3E2	1.719
29703	8154	Sisma X SLV	70.1	0	0	0	2.4E2	1.719	29704	8154	Sisma Y SLV	0	70.1	0	0	2.4E2	1.719
29705	8154	Sisma X SLD	69	0	0	0	2.4E2	1.719	29706	8154	Sisma Y SLD	0	69	0	0	2.4E2	1.719
29707	8155	Sisma X SLV	70.1	0	0	0	2.4E2	1.719	29708	8155	Sisma Y SLV	0	70.1	0	0	2.4E2	1.719
29709	8155	Sisma X SLD	69	0	0	0	2.4E2	1.719	29710	8155	Sisma Y SLD	0	69	0	0	2.4E2	1.719
29711	8156	Sisma X SLV	65.3	0	0	0	2.2E2	1.719	29712	8156	Sisma Y SLV	0	65.3	0	0	2.2E2	1.719
29713	8156	Sisma X SLD	64.3	0	0	0	2.2E2	1.719	29714	8156	Sisma Y SLD	0	64.3	0	0	2.2E2	1.719
29715	8157	Sisma X SLV	42.2	0	0	0	1.4E2	1.719	29716	8157	Sisma Y SLV	0	42.2	0	0	1.4E2	1.719
29717	8157	Sisma X SLD	41.5	0	0	0	1.4E2	1.719	29718	8157	Sisma Y SLD	0	41.5	0	0	1.4E2	1.719
29719	8158	Sisma X SLV	71.1	0	0	0	242.57	1.719	29720	8158	Sisma Y SLV	0	71.1	0	0	242.57	1.719
29721	8158	Sisma X SLD	70	0	0	0	242.57	1.719	29722	8158	Sisma Y SLD	0	70	0	0	242.57	1.719
29723	8159	Sisma X SLV	67.3	0	0	0	2.3E2	1.719	29724	8159	Sisma Y SLV	0	67.3	0	0	2.3E2	1.719
29725	8159	Sisma X SLD	66.2	0	0	0	2.3E2	1.719	29726	8159	Sisma Y SLD	0	66.2	0	0	2.3E2	1.719
29727	8160	Sisma X SLV	70.5	0	0	0	2.4E2	1.719	29728	8160	Sisma Y SLV	0	70.5	0	0	2.4E2	1.719
29729	8160	Sisma X SLD	69.4	0	0	0	2.4E2	1.719	29730	8160	Sisma Y SLD	0	69.4	0	0	2.4E2	1.719
29731	8161	Sisma X SLV	70.5	0	0	0	240.28	1.719	29732	8161	Sisma Y SLV	0	70.5	0	0	240.28	1.719
29733	8161	Sisma X SLD	69.4	0	0	0	240.28	1.719	29734	8161	Sisma Y SLD	0	69.4	0	0	240.28	1.719
29735	8162	Sisma X SLV	70.4	0	0	0	2.4E2	1.719	29736	8162	Sisma Y SLV	0	70.4	0	0	2.4E2	1.719
29737	8162	Sisma X SLD	69.3	0	0	0	2.4E2	1.719	29738	8162	Sisma Y SLD	0	69.3	0	0	2.4E2	1.719
29739	8163	Sisma X SLV	70.5	0	0	0	240.41	1.719	29740	8163	Sisma Y SLV	0	70.5	0	0	240.41	1.719
29741	8163	Sisma X SLD	69.4	0	0	0	240.41	1.719	29742	8163	Sisma Y SLD	0	69.4	0	0	240.41	1.719
29743	8164	Sisma X SLV	70.2	0	0	0	2.4E2	1.719	29744	8164	Sisma Y SLV	0	70.2	0	0	2.4E2	1.719
29745	8164	Sisma X SLD	69.1	0	0	0	2.4E2	1.719	29746	8164	Sisma Y SLD	0	69.1	0	0	2.4E2	1.719
29747	8165	Sisma X SLV	70.5	0	0	0	2.4E2	1.719	29748	8165	Sisma Y SLV	0	70.5	0	0	2.4E2	1.719
29749	8165	Sisma X SLD	69.4	0	0	0	2.4E2	1.719	29750	8165	Sisma Y SLD	0	69.4	0	0	2.4E2	1.719
29751	8166	Sisma X SLV	70	0	0	0	2.4E2	1.719	29752	8166	Sisma Y SLV	0	70	0	0	2.4E2	1.719
29753	8166	Sisma X SLD	68.9	0	0	0	2.4E2	1.719	29754	8166	Sisma Y SLD	0	68.9	0	0	2.4E2	1.719
29755	8167	Sisma X SLV	66.7	0	0	0	227.34	1.719	29756	8167	Sisma Y SLV	0	66.7	0	0	227.34	1.719
29757	8167	Sisma X SLD	65.6	0	0	0	227.34	1.719	29758	8167	Sisma Y SLD	0	65.6	0	0	227.34	1.719
29759	8168	Sisma X SLV	66.7	0	0	0	227.34	1.719	29760	8168	Sisma Y SLV	0	66.7	0	0	227.34	1.719
29761	8168	Sisma X SLD	65.6	0	0	0	227.34	1.719	29762	8168	Sisma Y SLD	0	65.6	0	0	227.34	1.719
29763	8169	Sisma X SLV	69.8	0	0	0	2.4E2	1.719	29764	8169	Sisma Y SLV	0	69.8	0	0	2.4E2	1.719
29765	8169	Sisma X SLD	68.7	0	0	0	2.4E2	1.719	29766	8169	Sisma Y SLD	0	68.7	0	0	2.4E2	1.719
29767	8170	Sisma X SLV	69.7	0	0	0	2.4E2	1.719	29768	8170	Sisma Y SLV	0	69.7	0	0	2.4E2	1.719
29769	8170	Sisma X SLD	68.6	0	0	0	2.4E2	1.719	29770	8170	Sisma Y SLD	0	68.6	0	0	2.4E2	1.719
29771	8171	Sisma X SLV	69.6	0	0	0	2.4E2	1.719	29772	8171	Sisma Y SLV	0	69.6	0	0	2.4E2	1.719
29773	8171	Sisma X SLD	68.5	0	0	0	2.4E2	1.719	29774	8171	Sisma Y SLD	0	68.5	0	0	2.4E2	1.719
29775	8172	Sisma X SLV	90	0	0	0	3.1E2	1.719	29776	8172	Sisma Y SLV	0	90	0	0	3.1E2	1.719
29777	8172	Sisma X SLD	88.6	0	0	0	3.1E2	1.719	29778	8172	Sisma Y SLD	0	88.6	0	0	3.1E2	1.719
29779	8173	Sisma X SLV	90.7	0	0	0	3.1E2	1.719	29780	8173	Sisma Y SLV	0	90.7	0	0	3.1E2	1.719
29781	8173	Sisma X SLD	89.2	0	0	0	3.1E2	1.719	29782	8173	Sisma Y SLD	0	89.2	0	0	3.1E2	1.719
29783	8174	Sisma X SLV	94	0	0	0	3.2E2	1.719	29784	8174	Sisma Y SLV	0	94	0	0	3.2E2	1.719
29785	8174	Sisma X SLD	92.5	0	0	0	3.2E2	1.719	29786	8174	Sisma Y SLD	0	92.5	0	0	3.2E2	1.719
29787	8175	Sisma X SLV	94.2	0	0	0	321.3	1.719	29788	8175	Sisma Y SLV	0	94.2	0	0	321.3	1.719
29789	8175	Sisma X SLD	92.7	0	0	0	321.3	1.719	29790	8175	Sisma Y SLD	0	92.7	0	0	321.3	1.719
29791	8176	Sisma X SLV	42.7	0	0	0	1.5E2	1.719	29792	8176	Sisma Y SLV	0	42.7	0	0	1.5E2	1.719
29793	8176	Sisma X SLD	42	0	0	0	1.5E2	1.719	29794	8176	Sisma Y SLD	0	42	0	0	1.5E2	1.719
29795	8177	Sisma X SLV	42.7	0	0	0	1.5E2	1.719	29796	8177	Sisma Y SLV	0	42.7	0	0	1.5E2	1.719
29797	8177	Sisma X SLD	42	0	0	0	1.5E2	1.719	29798	8177	Sisma Y SLD	0	42	0	0	1.5E2	1.719
29799	8178	Sisma X SLV	42.7	0	0	0	1.5E2	1.719	29800	8178	Sisma Y SLV	0	42.7	0	0	1.5E2	1.719
29801	8178	Sisma X SLD	42	0	0	0	1.5E2	1.719	29802	8178	Sisma Y SLD	0	42	0	0	1.5E2	1.719
29803	8179	Sisma X SLV	42.7	0	0	0	1.5E2	1.719	29804	8179	Sisma Y SLV	0	42.7	0	0	1.5E2	1.719
29805	8179	Sisma X SLD	42	0	0	0	1.5E2	1.719	29806	8179	Sisma Y SLD	0	42	0	0	1.5E2	1.719
29807	8180	Sisma X SLV	42.7	0	0	0	1.5E2	1.719	29808	8180	Sisma Y SLV	0	42.7	0	0	1.5E2	1.719
29809	8180	Sisma X SLD	42	0	0	0	1.5E2	1.719	29810	8180	Sisma Y SLD	0	42	0	0	1.5E2	1.719
29811	8181	Sisma X SLV	42.7	0	0	0	1.5E2	1.719	29812	8181	Sisma Y SLV	0	42.7	0	0	1.5E2	1.719
29813	8181	Sisma X SLD	42	0	0	0	1.5E2	1.719	29814	8181	Sisma Y SLD	0	42	0	0	1.5E2	1.719
29815	8182	Sisma X SLV	42.7	0	0	0	1.5E2	1.719	29816	8182	Sisma Y SLV	0	42.7	0	0	1.5E2	1.719
29817	8182	Sisma X SLD	42	0	0	0	1.5E2	1.719	29818	8182	Sisma Y SLD	0	42	0	0	1.5E2	1.719
29819	8183	Sisma X SLV	42.7	0	0	0	1.5E2	1.719	29820	8183	Sisma Y SLV	0	42.7	0	0	1.5E2	1.719
29821	8183	Sisma X SLD	42	0	0	0	1.5E2	1.719	29822	8183	Sisma Y SLD	0	42	0	0	1.5E2	1.719
29823	8184	Sisma X SLV	42.7	0	0	0	1.5E2	1.719	29824	8184	Sisma Y SLV	0	42.7	0	0	1.5E2	1.719

Indice	Nodo	Condizione	Fx	Fy	Fz	Mz	Peso	Gamma	Indice	Nodo	Condizione	Fx	Fy	Fz	Mz	Peso	Gamma
29825	8184	Sisma X SLD	42	0	0	0	1.5E2	1.719	29826	8184	Sisma Y SLD	0	42	0	0	1.5E2	1.719
29827	8185	Sisma X SLV	42.7	0	0	0	1.5E2	1.719	29828	8185	Sisma Y SLV	0	42.7	0	0	1.5E2	1.719
29829	8185	Sisma X SLD	42.1	0	0	0	1.5E2	1.719	29830	8185	Sisma Y SLD	0	42.1	0	0	1.5E2	1.719
29831	8186	Sisma X SLV	42.8	0	0	0	1.5E2	1.719	29832	8186	Sisma Y SLV	0	42.8	0	0	1.5E2	1.719
29833	8186	Sisma X SLD	42.1	0	0	0	1.5E2	1.719	29834	8186	Sisma Y SLD	0	42.1	0	0	1.5E2	1.719
29835	8187	Sisma X SLV	42.9	0	0	0	1.5E2	1.719	29836	8187	Sisma Y SLV	0	42.9	0	0	1.5E2	1.719
29837	8187	Sisma X SLD	42.2	0	0	0	1.5E2	1.719	29838	8187	Sisma Y SLD	0	42.2	0	0	1.5E2	1.719
29839	8188	Sisma X SLV	42.9	0	0	0	1.5E2	1.719	29840	8188	Sisma Y SLV	0	42.9	0	0	1.5E2	1.719
29841	8188	Sisma X SLD	42.2	0	0	0	1.5E2	1.719	29842	8188	Sisma Y SLD	0	42.2	0	0	1.5E2	1.719
29843	8189	Sisma X SLV	92.1	0	0	0	3.1E2	1.719	29844	8189	Sisma Y SLV	0	92.1	0	0	3.1E2	1.719
29845	8189	Sisma X SLD	90.6	0	0	0	3.1E2	1.719	29846	8189	Sisma Y SLD	0	90.6	0	0	3.1E2	1.719
29847	8190	Sisma X SLV	105.3	0	0	0	3.6E2	1.719	29848	8190	Sisma Y SLV	0	105.3	0	0	3.6E2	1.719
29849	8190	Sisma X SLD	103.6	0	0	0	3.6E2	1.719	29850	8190	Sisma Y SLD	0	103.6	0	0	3.6E2	1.719
29851	8191	Sisma X SLV	42.3	0	0	0	144.06	1.719	29852	8191	Sisma Y SLV	0	42.3	0	0	144.06	1.719
29853	8191	Sisma X SLD	41.6	0	0	0	144.06	1.719	29854	8191	Sisma Y SLD	0	41.6	0	0	144.06	1.719
29855	8192	Sisma X SLV	42.2	0	0	0	1.4E2	1.719	29856	8192	Sisma Y SLV	0	42.2	0	0	1.4E2	1.719
29857	8192	Sisma X SLD	41.6	0	0	0	1.4E2	1.719	29858	8192	Sisma Y SLD	0	41.6	0	0	1.4E2	1.719
29859	8193	Sisma X SLV	42.2	0	0	0	143.92	1.719	29860	8193	Sisma Y SLV	0	42.2	0	0	143.92	1.719
29861	8193	Sisma X SLD	41.5	0	0	0	143.92	1.719	29862	8193	Sisma Y SLD	0	41.5	0	0	143.92	1.719
29863	8194	Sisma X SLV	41.6	0	0	0	1.4E2	1.719	29864	8194	Sisma Y SLV	0	41.6	0	0	1.4E2	1.719
29865	8194	Sisma X SLD	40.9	0	0	0	1.4E2	1.719	29866	8194	Sisma Y SLD	0	40.9	0	0	1.4E2	1.719
29867	8195	Sisma X SLV	42.2	0	0	0	1.4E2	1.719	29868	8195	Sisma Y SLV	0	42.2	0	0	1.4E2	1.719
29869	8195	Sisma X SLD	41.5	0	0	0	1.4E2	1.719	29870	8195	Sisma Y SLD	0	41.5	0	0	1.4E2	1.719
29871	8196	Sisma X SLV	42.1	0	0	0	1.4E2	1.719	29872	8196	Sisma Y SLV	0	42.1	0	0	1.4E2	1.719
29873	8196	Sisma X SLD	41.4	0	0	0	1.4E2	1.719	29874	8196	Sisma Y SLD	0	41.4	0	0	1.4E2	1.719
29875	8197	Sisma X SLV	69	0	0	0	235.3	1.719	29876	8197	Sisma Y SLV	0	69	0	0	235.3	1.719
29877	8197	Sisma X SLD	67.9	0	0	0	235.3	1.719	29878	8197	Sisma Y SLD	0	67.9	0	0	235.3	1.719
29879	8198	Sisma X SLV	44.7	0	0	0	1.5E2	1.719	29880	8198	Sisma Y SLV	0	44.7	0	0	1.5E2	1.719
29881	8198	Sisma X SLD	44	0	0	0	1.5E2	1.719	29882	8198	Sisma Y SLD	0	44	0	0	1.5E2	1.719
29883	8199	Sisma X SLV	41.6	0	0	0	1.4E2	1.719	29884	8199	Sisma Y SLV	0	41.6	0	0	1.4E2	1.719
29885	8199	Sisma X SLD	40.9	0	0	0	1.4E2	1.719	29886	8199	Sisma Y SLD	0	40.9	0	0	1.4E2	1.719
29887	8200	Sisma X SLV	42	0	0	0	1.4E2	1.719	29888	8200	Sisma Y SLV	0	42	0	0	1.4E2	1.719
29889	8200	Sisma X SLD	41.4	0	0	0	1.4E2	1.719	29890	8200	Sisma Y SLD	0	41.4	0	0	1.4E2	1.719
29891	8201	Sisma X SLV	41.6	0	0	0	141.88	1.719	29892	8201	Sisma Y SLV	0	41.6	0	0	141.88	1.719
29893	8201	Sisma X SLD	41	0	0	0	141.88	1.719	29894	8201	Sisma Y SLD	0	41	0	0	141.88	1.719
29895	8202	Sisma X SLV	41.9	0	0	0	1.4E2	1.719	29896	8202	Sisma Y SLV	0	41.9	0	0	1.4E2	1.719
29897	8202	Sisma X SLD	41.3	0	0	0	1.4E2	1.719	29898	8202	Sisma Y SLD	0	41.3	0	0	1.4E2	1.719
29899	8203	Sisma X SLV	41.7	0	0	0	1.4E2	1.719	29900	8203	Sisma Y SLV	0	41.7	0	0	1.4E2	1.719
29901	8203	Sisma X SLD	41	0	0	0	1.4E2	1.719	29902	8203	Sisma Y SLD	0	41	0	0	1.4E2	1.719
29903	8204	Sisma X SLV	41.8	0	0	0	1.4E2	1.719	29904	8204	Sisma Y SLV	0	41.8	0	0	1.4E2	1.719
29905	8204	Sisma X SLD	41.2	0	0	0	1.4E2	1.719	29906	8204	Sisma Y SLD	0	41.2	0	0	1.4E2	1.719
29907	8205	Sisma X SLV	41.8	0	0	0	1.4E2	1.719	29908	8205	Sisma Y SLV	0	41.8	0	0	1.4E2	1.719
29909	8205	Sisma X SLD	41.1	0	0	0	1.4E2	1.719	29910	8205	Sisma Y SLD	0	41.1	0	0	1.4E2	1.719
29911	8206	Sisma X SLV	44.3	0	0	0	1.5E2	1.719	29912	8206	Sisma Y SLV	0	44.3	0	0	1.5E2	1.719
29913	8206	Sisma X SLD	43.6	0	0	0	1.5E2	1.719	29914	8206	Sisma Y SLD	0	43.6	0	0	1.5E2	1.719
29915	8207	Sisma X SLV	65.6	0	0	0	2.2E2	1.719	29916	8207	Sisma Y SLV	0	65.6	0	0	2.2E2	1.719
29917	8207	Sisma X SLD	64.6	0	0	0	2.2E2	1.719	29918	8207	Sisma Y SLD	0	64.6	0	0	2.2E2	1.719
29919	8208	Sisma X SLV	65.6	0	0	0	2.2E2	1.719	29920	8208	Sisma Y SLV	0	65.6	0	0	2.2E2	1.719
29921	8208	Sisma X SLD	64.6	0	0	0	2.2E2	1.719	29922	8208	Sisma Y SLD	0	64.6	0	0	2.2E2	1.719
29923	8209	Sisma X SLV	68.8	0	0	0	2.3E2	1.719	29924	8209	Sisma Y SLV	0	68.8	0	0	2.3E2	1.719
29925	8209	Sisma X SLD	67.7	0	0	0	2.3E2	1.719	29926	8209	Sisma Y SLD	0	67.7	0	0	2.3E2	1.719
29927	8210	Sisma X SLV	69.9	0	0	0	2.4E2	1.719	29928	8210	Sisma Y SLV	0	69.9	0	0	2.4E2	1.719
29929	8210	Sisma X SLD	68.8	0	0	0	2.4E2	1.719	29930	8210	Sisma Y SLD	0	68.8	0	0	2.4E2	1.719
29931	8211	Sisma X SLV	69.9	0	0	0	2.4E2	1.719	29932	8211	Sisma Y SLV	0	69.9	0	0	2.4E2	1.719
29933	8211	Sisma X SLD	68.8	0	0	0	2.4E2	1.719	29934	8211	Sisma Y SLD	0	68.8	0	0	2.4E2	1.719
29935	8212	Sisma X SLV	69.5	0	0	0	2.4E2	1.719	29936	8212	Sisma Y SLV	0	69.5	0	0	2.4E2	1.719
29937	8212	Sisma X SLD	68.4	0	0	0	2.4E2	1.719	29938	8212	Sisma Y SLD	0	68.4	0	0	2.4E2	1.719
29939	8213	Sisma X SLV	66.3	0	0	0	2.3E2	1.719	29940	8213	Sisma Y SLV	0	66.3	0	0	2.3E2	1.719
29941	8213	Sisma X SLD	65.3	0	0	0	2.3E2	1.719	29942	8213	Sisma Y SLD	0	65.3	0	0	2.3E2	1.719
29943	8214	Sisma X SLV	66.3	0	0	0	2.3E2	1.719	29944	8214	Sisma Y SLV	0	66.3	0	0	2.3E2	1.719
29945	8214	Sisma X SLD	65.3	0	0	0	2.3E2	1.719	29946	8214	Sisma Y SLD	0	65.3	0	0	2.3E2	1.719
29947	8215	Sisma X SLV	69.6	0	0	0	2.4E2	1.719	29948	8215	Sisma Y SLV	0	69.6	0	0	2.4E2	1.719
29949	8215	Sisma X SLD	68.5	0	0	0	2.4E2	1.719	29950	8215	Sisma Y SLD	0	68.5	0	0	2.4E2	1.719
29951	8216	Sisma X SLV	44.4	0	0	0	151.22	1.719	29952	8216	Sisma Y SLV	0	44.4	0	0	151.22	1.719
29953	8216	Sisma X SLD	43.7	0	0	0	151.22	1.719	29954	8216	Sisma Y SLD	0	43.7	0	0	151.22	1.719
29955	8217	Sisma X SLV	68.5	0	0	0	2.3E2	1.719	29956	8217	Sisma Y SLV	0	68.5	0	0	2.3E2	1.719
29957	8217	Sisma X SLD	67.4	0	0	0	2.3E2	1.719	29958	8217	Sisma Y SLD	0	67.4	0	0	2.3E2	1.719
29959	8218	Sisma X SLV	44.1	0	0	0	1.5E2	1.719	29960	8218	Sisma Y SLV	0	44.1	0	0	1.5E2	1.719
29961	8218	Sisma X SLD	43.4	0	0	0	1.5E2	1.719	29962	8218	Sisma Y SLD	0	43.4	0	0	1.5E2	1.719
29963	8219	Sisma X SLV	69.6	0	0	0	2.4E2	1.719	29964	8219	Sisma Y SLV	0	69.6	0	0	2.4E2	1.719
29965	8219	Sisma X SLD	68.5	0	0	0	2.4E2	1.719	29966	8219	Sisma Y SLD	0	68.5	0	0	2.4E2	1.719
29967	8220	Sisma X SLV	69.3	0	0	0	236.34	1.719	29968	8220	Sisma Y SLV	0	69.3	0	0	236.34	1.719
29969	8220	Sisma X SLD	68.2	0	0	0	236.34	1.719	29970	8220	Sisma Y SLD	0	68.2	0	0	236.34	1.719
29971	8221	Sisma X SLV	69.5	0	0	0	2.4E2	1.719	29972	8221	Sisma Y SLV	0	69.5	0	0	2.4E2	1.719
29973	8221	Sisma X SLD	68.4	0	0	0	2.4E2	1.719	29974	8221	Sisma Y SLD	0	68.4	0	0	2.4E2	1.719
29975	8222	Sisma X SLV	65.9	0	0	0	224.63	1.72	29976	8222	Sisma Y SLV	0	65.9	0	0	224.63	1.72
29977	8222	Sisma X SLD	64.9	0	0	0	224.63	1.72	29978	8222	Sisma Y SLD	0	64.9	0	0	224.63	1.72
29979	8223	Sisma X SLV	65.9	0	0	0	224.63	1.72	29980	8223	Sisma Y SLV	0	65.9	0	0	224.63	1.72
29981	8223	Sisma X SLD	64.9	0	0	0	224.63	1.72	29982	8223	Sisma Y SLD	0	64.9	0	0	224.63	1.72
29983	8224	Sisma X SLV	68.2	0	0	0	2.3E2	1.72	29984	8224	Sisma Y SLV	0	68.2	0	0	2.3E2	1.72
29985	8224	Sisma X SLD	67.1	0	0	0	2.3E2	1.72	29986	8224	Sisma Y SLD	0	67.1	0	0	2.3E2	1.72
29987	8225	Sisma X SLV	65.1	0	0	0	2.2E2	1.72	29988	8225	Sisma Y SLV	0	65.1	0	0	2.2E2	1.72
29989	8225	Sisma X SLD	64	0	0	0	2.2E2	1.72	29990	8225	Sisma Y SLD	0	64	0	0	2.2E2	1.72
29991	8226	Sisma X SLV	65.1	0	0	0	2.2E2	1.72	29992	8226	Sisma Y SLV	0	65.1	0	0	2.2E2	1.72
29993	8226	Sisma X SLD	64	0	0	0	2.2E2	1.72	29994	8226	Sisma Y SLD	0	64	0	0	2.2E2	1.72
29995	8227	Sisma X SLV	43.8	0	0	0	1.5E2	1.72	29996	8227	Sisma Y SLV	0	43.8	0	0	1.5E2	1.72
29997	8227	Sisma X SLD	43.1	0	0	0	1.5E2	1.72	29998	8227	Sisma Y SLD	0	43.1	0	0	1.5E2	1.72
29999	8228	Sisma X SLV	68.7	0	0	0	2.3E2	1.72	30000	8228	Sisma Y SLV	0	68.7	0	0	2.3E2	1.72
30001	8228	Sisma X SLD	67.6	0	0	0	2.3E2	1.72	30002	8228	Sisma Y SLD	0	67.6	0	0	2.3E2	1.72
30003	8229	Sisma X SLV	69.2	0	0	0	2.4E2	1.72	30004	8229	Sisma Y SLV	0	69.2	0	0	2.4E2	1.72
30005	8229	Sisma X SLD	68.1	0	0	0	2.4E2	1.72	30006	8229	Sisma Y SLD	0	68.1	0	0	2.4E2	1.72
30007	8230	Sisma X SLV	44	0	0	0	1.5E2	1.72	30008	8230	Sisma Y SLV	0	44	0	0	1.5E2	1.72
30009	8230	Sisma X SLD	43.3	0	0	0	1.5E2	1.72	30010	8230	Sisma Y SLD	0	43.3	0	0	1.5E2	1.72
30011	8231	Sisma X SLV	69	0	0	0	2.4E2	1.72	30012	8231	Sisma Y SLV	0	69	0	0	2.4E2	1.72
30013	8231	Sisma X SLD	67.9	0	0	0	2.4E2	1.72	30014	8231	Sisma Y SLD	0	67.9	0	0	2.4E2	1.72
30015	8232	Sisma X SLV	69.1	0	0	0	2.4E2	1.72	30016	8232	Sisma Y SLV	0	69.1	0	0	2.4E2	1.72
30017	8232	Sisma X SLD	68	0	0	0	2.4E2	1.72	30018	8232	Sisma Y SLD	0	68	0	0	2.4E2	1.72
30019	8233	Sisma X SLV	65.5	0	0	0	2.2E2	1.72	30020	8233	Sisma Y SLV	0	65.5	0	0	2.2E2	1.72
30021	8233	Sisma X SLD	64.5	0	0	0	2.2E2	1.72	30022	8233	Sisma Y SLD	0	64.5	0	0	2.2E2	1.72
30023	8234	Sisma X SLV	65.5	0	0	0	2.2E2	1.72	30024	8234	Sisma Y SLV	0	65.5	0	0	2.2E2	1.72
30025	8234	Sisma X SLD	64.5	0	0	0	2.2E2	1.72	30026	8234	Sisma Y SLD	0	64.5	0	0	2.2E2	1.72

Indice	Nodo	Condizione	Fx	Fy	Fz	Mz	Peso	Gamma	Indice	Nodo	Condizione	Fx	Fy	Fz	Mz	Peso	Gamma
30027	8235	Sisma X SLV	67.9	0	0	0	2.3E2	1.72	30028	8235	Sisma Y SLV	0	67.9	0	0	2.3E2	1.72
30029	8235	Sisma X SLD	66.8	0	0	0	2.3E2	1.72	30030	8235	Sisma Y SLD	0	66.8	0	0	2.3E2	1.72
30031	8236	Sisma X SLV	43.6	0	0	0	1.5E2	1.72	30032	8236	Sisma Y SLV	0	43.6	0	0	1.5E2	1.72
30033	8236	Sisma X SLD	42.9	0	0	0	1.5E2	1.72	30034	8236	Sisma Y SLD	0	42.9	0	0	1.5E2	1.72
30035	8237	Sisma X SLV	68.7	0	0	0	2.3E2	1.72	30036	8237	Sisma Y SLV	0	68.7	0	0	2.3E2	1.72
30037	8237	Sisma X SLD	67.6	0	0	0	2.3E2	1.72	30038	8237	Sisma Y SLD	0	67.6	0	0	2.3E2	1.72
30039	8238	Sisma X SLV	68.8	0	0	0	2.3E2	1.72	30040	8238	Sisma Y SLV	0	68.8	0	0	2.3E2	1.72
30041	8238	Sisma X SLD	67.7	0	0	0	2.3E2	1.72	30042	8238	Sisma Y SLD	0	67.7	0	0	2.3E2	1.72
30043	8239	Sisma X SLV	64.7	0	0	0	2.2E2	1.72	30044	8239	Sisma Y SLV	0	64.7	0	0	2.2E2	1.72
30045	8239	Sisma X SLD	63.7	0	0	0	2.2E2	1.72	30046	8239	Sisma Y SLD	0	63.7	0	0	2.2E2	1.72
30047	8240	Sisma X SLV	64.7	0	0	0	2.2E2	1.72	30048	8240	Sisma Y SLV	0	64.7	0	0	2.2E2	1.72
30049	8240	Sisma X SLD	63.7	0	0	0	2.2E2	1.72	30050	8240	Sisma Y SLD	0	63.7	0	0	2.2E2	1.72
30051	8241	Sisma X SLV	43.7	0	0	0	1.5E2	1.72	30052	8241	Sisma Y SLV	0	43.7	0	0	1.5E2	1.72
30053	8241	Sisma X SLD	43	0	0	0	1.5E2	1.72	30054	8241	Sisma Y SLD	0	43	0	0	1.5E2	1.72
30055	8242	Sisma X SLV	68.7	0	0	0	2.3E2	1.72	30056	8242	Sisma Y SLV	0	68.7	0	0	2.3E2	1.72
30057	8242	Sisma X SLD	67.6	0	0	0	2.3E2	1.72	30058	8242	Sisma Y SLD	0	67.6	0	0	2.3E2	1.72
30059	8243	Sisma X SLV	68.1	0	0	0	2.3E2	1.72	30060	8243	Sisma Y SLV	0	68.1	0	0	2.3E2	1.72
30061	8243	Sisma X SLD	67	0	0	0	2.3E2	1.72	30062	8243	Sisma Y SLD	0	67	0	0	2.3E2	1.72
30063	8244	Sisma X SLV	65.1	0	0	0	2.2E2	1.72	30064	8244	Sisma Y SLV	0	65.1	0	0	2.2E2	1.72
30065	8244	Sisma X SLD	64.1	0	0	0	2.2E2	1.72	30066	8244	Sisma Y SLD	0	64.1	0	0	2.2E2	1.72
30067	8245	Sisma X SLV	65.1	0	0	0	2.2E2	1.72	30068	8245	Sisma Y SLV	0	65.1	0	0	2.2E2	1.72
30069	8245	Sisma X SLD	64.1	0	0	0	2.2E2	1.72	30070	8245	Sisma Y SLD	0	64.1	0	0	2.2E2	1.72
30071	8246	Sisma X SLV	68.5	0	0	0	2.3E2	1.72	30072	8246	Sisma Y SLV	0	68.5	0	0	2.3E2	1.72
30073	8246	Sisma X SLD	67.4	0	0	0	2.3E2	1.72	30074	8246	Sisma Y SLD	0	67.4	0	0	2.3E2	1.72
30075	8247	Sisma X SLV	67.7	0	0	0	2.3E2	1.72	30076	8247	Sisma Y SLV	0	67.7	0	0	2.3E2	1.72
30077	8247	Sisma X SLD	66.6	0	0	0	2.3E2	1.72	30078	8247	Sisma Y SLD	0	66.6	0	0	2.3E2	1.72
30079	8248	Sisma X SLV	68.5	0	0	0	2.3E2	1.72	30080	8248	Sisma Y SLV	0	68.5	0	0	2.3E2	1.72
30081	8248	Sisma X SLD	67.4	0	0	0	2.3E2	1.72	30082	8248	Sisma Y SLD	0	67.4	0	0	2.3E2	1.72
30083	8249	Sisma X SLV	43.4	0	0	0	1.5E2	1.72	30084	8249	Sisma Y SLV	0	43.4	0	0	1.5E2	1.72
30085	8249	Sisma X SLD	42.7	0	0	0	1.5E2	1.72	30086	8249	Sisma Y SLD	0	42.7	0	0	1.5E2	1.72
30087	8250	Sisma X SLV	67.7	0	0	0	2.3E2	1.72	30088	8250	Sisma Y SLV	0	67.7	0	0	2.3E2	1.72
30089	8250	Sisma X SLD	66.7	0	0	0	2.3E2	1.72	30090	8250	Sisma Y SLD	0	66.7	0	0	2.3E2	1.72
30091	8251	Sisma X SLV	67.6	0	0	0	2.3E2	1.72	30092	8251	Sisma Y SLV	0	67.6	0	0	2.3E2	1.72
30093	8251	Sisma X SLD	66.5	0	0	0	2.3E2	1.72	30094	8251	Sisma Y SLD	0	66.5	0	0	2.3E2	1.72
30095	8252	Sisma X SLV	64.5	0	0	0	2.2E2	1.72	30096	8252	Sisma Y SLV	0	64.5	0	0	2.2E2	1.72
30097	8252	Sisma X SLD	63.5	0	0	0	2.2E2	1.72	30098	8252	Sisma Y SLD	0	63.5	0	0	2.2E2	1.72
30099	8253	Sisma X SLV	64.5	0	0	0	2.2E2	1.72	30100	8253	Sisma Y SLV	0	64.5	0	0	2.2E2	1.72
30101	8253	Sisma X SLD	63.5	0	0	0	2.2E2	1.72	30102	8253	Sisma Y SLD	0	63.5	0	0	2.2E2	1.72
30103	8254	Sisma X SLV	64.8	0	0	0	2.2E2	1.72	30104	8254	Sisma Y SLV	0	64.8	0	0	2.2E2	1.72
30105	8254	Sisma X SLD	63.8	0	0	0	2.2E2	1.72	30106	8254	Sisma Y SLD	0	63.8	0	0	2.2E2	1.72
30107	8255	Sisma X SLV	64.8	0	0	0	2.2E2	1.72	30108	8255	Sisma Y SLV	0	64.8	0	0	2.2E2	1.72
30109	8255	Sisma X SLD	63.8	0	0	0	2.2E2	1.72	30110	8255	Sisma Y SLD	0	63.8	0	0	2.2E2	1.72
30111	8256	Sisma X SLV	68.4	0	0	0	2.3E2	1.72	30112	8256	Sisma Y SLV	0	68.4	0	0	2.3E2	1.72
30113	8256	Sisma X SLD	67.3	0	0	0	2.3E2	1.72	30114	8256	Sisma Y SLD	0	67.3	0	0	2.3E2	1.72
30115	8257	Sisma X SLV	68.3	0	0	0	2.3E2	1.72	30116	8257	Sisma Y SLV	0	68.3	0	0	2.3E2	1.72
30117	8257	Sisma X SLD	67.2	0	0	0	2.3E2	1.72	30118	8257	Sisma Y SLD	0	67.2	0	0	2.3E2	1.72
30119	8258	Sisma X SLV	43.5	0	0	0	1.5E2	1.72	30120	8258	Sisma Y SLV	0	43.5	0	0	1.5E2	1.72
30121	8258	Sisma X SLD	42.8	0	0	0	1.5E2	1.72	30122	8258	Sisma Y SLD	0	42.8	0	0	1.5E2	1.72
30123	8259	Sisma X SLV	68.3	0	0	0	2.3E2	1.72	30124	8259	Sisma Y SLV	0	68.3	0	0	2.3E2	1.72
30125	8259	Sisma X SLD	67.2	0	0	0	2.3E2	1.72	30126	8259	Sisma Y SLD	0	67.2	0	0	2.3E2	1.72
30127	8260	Sisma X SLV	68.3	0	0	0	2.3E2	1.72	30128	8260	Sisma Y SLV	0	68.3	0	0	2.3E2	1.72
30129	8260	Sisma X SLD	67.2	0	0	0	2.3E2	1.72	30130	8260	Sisma Y SLD	0	67.2	0	0	2.3E2	1.72
30131	8261	Sisma X SLV	64.6	0	0	0	2.2E2	1.72	30132	8261	Sisma Y SLV	0	64.6	0	0	2.2E2	1.72
30133	8261	Sisma X SLD	63.6	0	0	0	2.2E2	1.72	30134	8261	Sisma Y SLD	0	63.6	0	0	2.2E2	1.72
30135	8262	Sisma X SLV	64.6	0	0	0	2.2E2	1.72	30136	8262	Sisma Y SLV	0	64.6	0	0	2.2E2	1.72
30137	8262	Sisma X SLD	63.6	0	0	0	2.2E2	1.72	30138	8262	Sisma Y SLD	0	63.6	0	0	2.2E2	1.72
30139	8263	Sisma X SLV	43.3	0	0	0	1.5E2	1.72	30140	8263	Sisma Y SLV	0	43.3	0	0	1.5E2	1.72
30141	8263	Sisma X SLD	42.6	0	0	0	1.5E2	1.72	30142	8263	Sisma Y SLD	0	42.6	0	0	1.5E2	1.72
30143	8264	Sisma X SLV	68.2	0	0	0	2.3E2	1.721	30144	8264	Sisma Y SLV	0	68.2	0	0	2.3E2	1.721
30145	8264	Sisma X SLD	67.1	0	0	0	2.3E2	1.721	30146	8264	Sisma Y SLD	0	67.1	0	0	2.3E2	1.721
30147	8265	Sisma X SLV	43.3	0	0	0	1.5E2	1.721	30148	8265	Sisma Y SLV	0	43.3	0	0	1.5E2	1.721
30149	8265	Sisma X SLD	42.6	0	0	0	1.5E2	1.721	30150	8265	Sisma Y SLD	0	42.6	0	0	1.5E2	1.721
30151	8266	Sisma X SLV	68.1	0	0	0	2.3E2	1.721	30152	8266	Sisma Y SLV	0	68.1	0	0	2.3E2	1.721
30153	8266	Sisma X SLD	67	0	0	0	2.3E2	1.721	30154	8266	Sisma Y SLD	0	67	0	0	2.3E2	1.721
30155	8267	Sisma X SLV	43.2	0	0	0	1.5E2	1.721	30156	8267	Sisma Y SLV	0	43.2	0	0	1.5E2	1.721
30157	8267	Sisma X SLD	42.6	0	0	0	1.5E2	1.721	30158	8267	Sisma Y SLD	0	42.6	0	0	1.5E2	1.721
30159	8268	Sisma X SLV	61	0	0	0	2.1E2	1.725	30160	8268	Sisma Y SLV	0	61	0	0	2.1E2	1.725
30161	8268	Sisma X SLD	60	0	0	0	2.1E2	1.725	30162	8268	Sisma Y SLD	0	60	0	0	2.1E2	1.725
30163	8269	Sisma X SLV	61	0	0	0	2.1E2	1.725	30164	8269	Sisma Y SLV	0	61	0	0	2.1E2	1.725
30165	8269	Sisma X SLD	60	0	0	0	2.1E2	1.725	30166	8269	Sisma Y SLD	0	60	0	0	2.1E2	1.725
30167	8270	Sisma X SLV	58.4	0	0	0	2.0E2	1.727	30168	8270	Sisma Y SLV	0	58.4	0	0	2.0E2	1.727
30169	8270	Sisma X SLD	57.4	0	0	0	2.0E2	1.727	30170	8270	Sisma Y SLD	0	57.4	0	0	2.0E2	1.727
30171	8271	Sisma X SLV	58.4	0	0	0	2.0E2	1.727	30172	8271	Sisma Y SLV	0	58.4	0	0	2.0E2	1.727
30173	8271	Sisma X SLD	57.4	0	0	0	2.0E2	1.727	30174	8271	Sisma Y SLD	0	57.4	0	0	2.0E2	1.727
30175	8272	Sisma X SLV	57.4	0	0	0	194.59	1.728	30176	8272	Sisma Y SLV	0	57.4	0	0	194.59	1.728
30177	8272	Sisma X SLD	56.5	0	0	0	194.59	1.728	30178	8272	Sisma Y SLD	0	56.5	0	0	194.59	1.728
30179	8273	Sisma X SLV	58.8	0	0	0	2.0E2	1.729	30180	8273	Sisma Y SLV	0	58.8	0	0	2.0E2	1.729
30181	8273	Sisma X SLD	57.9	0	0	0	2.0E2	1.729	30182	8273	Sisma Y SLD	0	57.9	0	0	2.0E2	1.729
30183	8274	Sisma X SLV	58.8	0	0	0	2.0E2	1.729	30184	8274	Sisma Y SLV	0	58.8	0	0	2.0E2	1.729
30185	8274	Sisma X SLD	57.9	0	0	0	2.0E2	1.729	30186	8274	Sisma Y SLD	0	57.9	0	0	2.0E2	1.729
30187	8275	Sisma X SLV	52.2	0	0	0	1.8E2	1.729	30188	8275	Sisma Y SLV	0	52.2	0	0	1.8E2	1.729
30189	8275	Sisma X SLD	51.4	0	0	0	1.8E2	1.729	30190	8275	Sisma Y SLD	0	51.4	0	0	1.8E2	1.729
30191	8276	Sisma X SLV	52.2	0	0	0	1.8E2	1.729	30192	8276	Sisma Y SLV	0	52.2	0	0	1.8E2	1.729
30193	8276	Sisma X SLD	51.4	0	0	0	1.8E2	1.729	30194	8276	Sisma Y SLD	0	51.4	0	0	1.8E2	1.729
30195	8277	Sisma X SLV	61.2	0	0	0	2.1E2	1.73	30196	8277	Sisma Y SLV	0	61.2	0	0	2.1E2	1.73
30197	8277	Sisma X SLD	60.3	0	0	0	2.1E2	1.73	30198	8277	Sisma Y SLD	0	60.3	0	0	2.1E2	1.73
30199	8278	Sisma X SLV	61.2	0	0	0	2.1E2	1.73	30200	8278	Sisma Y SLV	0	61.2	0	0	2.1E2	1.73
30201	8278	Sisma X SLD	60.3	0	0	0	2.1E2	1.73	30202	8278	Sisma Y SLD	0	60.3	0	0	2.1E2	1.73
30203	8279	Sisma X SLV	58.9	0	0	0	199.45	1.73	30204	8279	Sisma Y SLV	0	58.9	0	0	199.45	1.73
30205	8279	Sisma X SLD	57.9	0	0	0	199.45	1.73	30206	8279	Sisma Y SLD	0	57.9	0	0	199.45	1.73
30207	8280	Sisma X SLV	58.9	0	0	0	199.45	1.73	30208	8280	Sisma Y SLV	0	58.9	0	0	199.45	1.73
30209	8280	Sisma X SLD	57.9	0	0	0	199.45	1.73	30210	8280	Sisma Y SLD	0	57.9	0	0	199.45	1.73
30211	8281	Sisma X SLV	58.2	0	0	0	2.0E2	1.73	30212	8281	Sisma Y SLV	0	58.2	0	0	2.0E2	1.73
30213	8281	Sisma X SLD	57.3	0	0	0	2.0E2	1.73	30214	8281	Sisma Y SLD	0	57.3	0	0	2.0E2	1.73
30215	8282	Sisma X SLV	57.3	0	0	0	1.9E2	1.73	30216	8282	Sisma Y SLV	0	57.3	0	0	1.9E2	1.73
30217	8282	Sisma X SLD	56.4	0	0	0	1.9E2	1.73	30218	8282	Sisma Y SLD	0	56.4	0	0	1.9E2	1.73
30219	8283	Sisma X SLV	57.3	0	0	0	1.9E2	1.73	30220	8283	Sisma Y SLV	0	57.3	0	0	1.9E2	1.73
30221	8283	Sisma X SLD	56.4	0	0	0	1.9E2	1.73	30222	8283	Sisma Y SLD	0	56.4	0	0	1.9E2	1.73
30223	8284	Sisma X SLV	58.1	0	0	0	2.0E2	1.731	30224	8284	Sisma Y SLV	0	58.1	0	0	2.0E2	1.731
30225	8284	Sisma X SLD	57.1	0	0	0	2.0E2	1.731	30226	8284	Sisma Y SLD	0	57.1	0	0	2.0E2	1.731
30227	8285	Sisma X SLV	50.3	0	0	0	1.7E2	1.731	30228	8285	Sisma Y SLV	0	50.3	0	0	1.7E2	1.731
30229	8285	Sisma X SLD	49.5	0	0	0	1.7E2	1.731	30230	8285	Sisma Y SLD	0	49.5	0	0	1.7E2	1.731
30231	8286	Sisma X SLV	57.8	0	0	0	2.0E2	1.731	30232	8286	Sisma Y SLV	0	57.8	0	0	2.0E2	1.731
30233	8286	Sisma X SLD	56.9	0	0	0	2.0E2	1.731	30234	8286	Sisma Y SLD	0	56.9	0	0	2.0E2	1.731

Indice	Nodo	Condizione	Fx	Fy	Fz	Mz	Peso	Gamma	Indice	Nodo	Condizione	Fx	Fy	Fz	Mz	Peso	Gamma
30235	8287	Sisma X SLV	56.9	0	0	0	1.9E2	1.732	30236	8287	Sisma Y SLV	0	56.9	0	0	1.9E2	1.732
30237	8287	Sisma X SLD	56	0	0	0	1.9E2	1.732	30238	8287	Sisma Y SLD	0	56	0	0	1.9E2	1.732
30239	8288	Sisma X SLV	56.3	0	0	0	190.53	1.732	30240	8288	Sisma Y SLV	0	56.3	0	0	190.53	1.732
30241	8288	Sisma X SLD	55.4	0	0	0	190.53	1.732	30242	8288	Sisma Y SLD	0	55.4	0	0	190.53	1.732
30243	8289	Sisma X SLV	53	0	0	0	1.8E2	1.732	30244	8289	Sisma Y SLV	0	53	0	0	1.8E2	1.732
30245	8289	Sisma X SLD	52.2	0	0	0	1.8E2	1.732	30246	8289	Sisma Y SLD	0	52.2	0	0	1.8E2	1.732
30247	8290	Sisma X SLV	53	0	0	0	1.8E2	1.732	30248	8290	Sisma Y SLV	0	53	0	0	1.8E2	1.732
30249	8290	Sisma X SLD	52.2	0	0	0	1.8E2	1.732	30250	8290	Sisma Y SLD	0	52.2	0	0	1.8E2	1.732
30251	8291	Sisma X SLV	54	0	0	0	1.8E2	1.732	30252	8291	Sisma Y SLV	0	54	0	0	1.8E2	1.732
30253	8291	Sisma X SLD	53.1	0	0	0	1.8E2	1.732	30254	8291	Sisma Y SLD	0	53.1	0	0	1.8E2	1.732
30255	8292	Sisma X SLV	55.5	0	0	0	1.9E2	1.732	30256	8292	Sisma Y SLV	0	55.5	0	0	1.9E2	1.732
30257	8292	Sisma X SLD	54.6	0	0	0	1.9E2	1.732	30258	8292	Sisma Y SLD	0	54.6	0	0	1.9E2	1.732
30259	8293	Sisma X SLV	53.7	0	0	0	1.8E2	1.734	30260	8293	Sisma Y SLV	0	53.7	0	0	1.8E2	1.734
30261	8293	Sisma X SLD	52.9	0	0	0	1.8E2	1.734	30262	8293	Sisma Y SLD	0	52.9	0	0	1.8E2	1.734
30263	8294	Sisma X SLV	50.8	0	0	0	1.7E2	1.734	30264	8294	Sisma Y SLV	0	50.8	0	0	1.7E2	1.734
30265	8294	Sisma X SLD	50	0	0	0	1.7E2	1.734	30266	8294	Sisma Y SLD	0	50	0	0	1.7E2	1.734
30267	8295	Sisma X SLV	55	0	0	0	1.9E2	1.734	30268	8295	Sisma Y SLV	0	55	0	0	1.9E2	1.734
30269	8295	Sisma X SLD	54.2	0	0	0	1.9E2	1.734	30270	8295	Sisma Y SLD	0	54.2	0	0	1.9E2	1.734
30271	3	Sisma X SLV	1.2E5	0	0	0	3.8E5	1.784	30272	3	Sisma Y SLV	0	1.2E5	0	0	3.8E5	1.784
30273	3	Eccentricità Y per sisma X SLV	0	0	0	-8.5E6	3.8E5	1.784	30274	3	Eccentricità X per sisma Y SLV	0	0	0	1.0E7	3.8E5	1.784
30275	3	Sisma X SLD	1.1E5	0	0	0	3.8E5	1.784	30276	3	Sisma Y SLD	0	1.1E5	0	0	3.8E5	1.784
30277	3	Eccentricità Y per sisma X SLD	0	0	0	-8.4E6	3.8E5	1.784	30278	3	Eccentricità X per sisma Y SLD	0	0	0	1.0E7	3.8E5	1.784

1.2 Elementi muratura

1.2.1 Maschi in muratura

***Indice**: Numero dell'elemento nell'insieme che lo contiene.*
***Materiale**: Muratura di cui è composto l'elemento.*
***Tronco**: Tronco dell'elemento o degli elementi generanti; nel caso non sia identificabile univocamente un tronco vale "Quote generiche"*
***Punto iniziale**: Punto iniziale, in pianta, del piano medio.*
***X**: Coordinata X. [cm]*
***Y**: Coordinata Y. [cm]*
***Punto finale**: Punto finale, in pianta, del piano medio.*
***X**: Coordinata X. [cm]*
***Y**: Coordinata Y. [cm]*
***Altezza**: Altezza media del piano medio. [cm]*
***Lunghezza**: Distanza tra il punto iniziale e il punto finale. [cm]*
***Spessore**: Spessore misurato in direzione ortogonale al piano medio dell'elemento. [cm]*
***Irrigidimenti**: Irrigidimenti verticali ortogonali al piano del maschio.*
***Interasse**: Interasse irrigidimenti verticali ortogonali al piano del maschio. [cm]*
***Denominatore**: Denominatore che compare nella formula per il calcolo del momento ortogonale. Il valore è adimensionale. Accetta anche il valore di default espresso nelle preferenze.*
***Aggancio**: Forza di aggancio al piano per unità di lunghezza del maschio. [daN/cm]*
***Valutazione proporzioni**: Criterio di valutazione delle proporzioni geometriche; è possibile indicare di attenersi ai limiti dimensionali prescritti dalla norma di analisi.*
***Secondario**: Maschio da considerarsi come elemento strutturale secondario rispetto alle azioni sismiche, cioè non contribuente alla resistenza della struttura alle azioni sismiche.*
***Miglioramenti**: Miglioramenti.*

Indice	Materiale	Tronco	Punto iniziale		Punto finale		Altezza	Lunghezza	Spessore	Irrigidimenti	Denominatore	Aggancio	Valutazione proporzioni	Secondario	Miglioramenti
			X	Y	X	Y				Interasse					
1	Muratura in pietrame consolidata con iniezioni LC1	Fondazione - Piano 1	142.5	655	142.5	142.5	500	512.5	85		Default (8)	Default (30)	Conformemente alla norma di analisi	No (secondo norma di analisi)	Nessun miglioramento
2	Muratura in pietrame consolidata con iniezioni LC1	Fondazione - Piano 1	142.5	895	142.5	765	500	130	85		Default (8)	Default (30)	Conformemente alla norma di analisi	Si (secondo norma di analisi)	Nessun miglioramento
3	Muratura in pietrame consolidata con iniezioni LC1	Fondazione - Piano 1	142.5	1315	142.5	995	500	320	85		Default (8)	Default (30)	Conformemente alla norma di analisi	No (secondo norma di analisi)	Nessun miglioramento
4	Muratura in pietrame consolidata con iniezioni LC1	Fondazione - Piano 1	142.5	1522.5	142.5	1435	500	87.5	85		Default (8)	Default (30)	Conformemente alla norma di analisi	Si (secondo norma di analisi)	Nessun miglioramento
5	Muratura in pietrame consolidata con iniezioni LC1	Fondazione - Piano 1	142.5	142.5	240	142.5	500	97.5	85		Default (8)	Default (30)	Conformemente alla norma di analisi	Si (secondo norma di analisi)	Nessun miglioramento
6	Muratura in pietrame consolidata con iniezioni LC1	Fondazione - Piano 1	240	610	142.5	610	500	97.5	45		Default (8)	Default (30)	Conformemente alla norma di analisi	Si (secondo norma di analisi)	Nessun miglioramento

Indice	Materiale	Tronco	Punto iniziale		Punto finale		Altezza	Lunghezza	Spessore	Irrigidimenti	Denominatore	Aggancio	Valutazione proporzioni	Secondario	Miglioramenti
			X	Y	X	Y				Interasse					
7	Muratura in pietrame consolidata con iniezioni LC1	Fondazione - Piano 1	240	1070	142.5	1070	500	97.5	45		Default (8)	Default (30)	Conformemente alla norma di analisi	Si (secondo norma di analisi)	Nessun miglioramento
8	Muratura in pietrame consolidata con iniezioni LC1	Fondazione - Piano 1	680	1070	340	1070	500	340	45		Default (8)	Default (30)	Conformemente alla norma di analisi	No (secondo norma di analisi)	Nessun miglioramento
9	Muratura in pietrame consolidata con iniezioni LC1	Fondazione - Piano 1	220	1522.5	142.5	1522.5	500	77.5	85		Default (8)	Default (30)	Conformemente alla norma di analisi	Si (secondo norma di analisi)	Nessun miglioramento
10	Muratura in pietrame consolidata con iniezioni LC1	Fondazione - Piano 1	680	705	680	142.5	500	562.5	100		Default (8)	Default (30)	Conformemente alla norma di analisi	No (secondo norma di analisi)	Nessun miglioramento
11	Muratura in pietrame consolidata con iniezioni LC1	Fondazione - Piano 1	680	1522.5	680	805	500	717.5	100		Default (8)	Default (30)	Conformemente alla norma di analisi	No (secondo norma di analisi)	Nessun miglioramento
12	Muratura in pietrame consolidata con iniezioni LC1	Fondazione - Piano 1	390	142.5	780	142.5	500	390	85		Default (8)	Default (30)	Conformemente alla norma di analisi	No (secondo norma di analisi)	Nessun miglioramento
13	Muratura in pietrame consolidata con iniezioni LC1	Fondazione - Piano 1	900	610	340	610	500	560	45		Default (8)	Default (30)	Conformemente alla norma di analisi	No (secondo norma di analisi)	Miglioramento con rete a betoncino
14	Muratura in pietrame consolidata con iniezioni LC1	Fondazione - Piano 1	900	1522.5	340	1522.5	500	560	85		Default (8)	Default (30)	Conformemente alla norma di analisi	No (secondo norma di analisi)	Nessun miglioramento
15	Muratura in pietrame consolidata con iniezioni LC1	Fondazione - Piano 1	900	142.5	1100	142.5	500	200	85		Default (8)	Default (30)	Conformemente alla norma di analisi	No (secondo norma di analisi)	Miglioramento con rete a betoncino
16	Muratura in pietrame consolidata con iniezioni LC1	Fondazione - Piano 1	1220	142.5	1650	142.5	500	430	85		Default (8)	Default (30)	Conformemente alla norma di analisi	No (secondo norma di analisi)	Nessun miglioramento
17	Muratura in pietrame consolidata con iniezioni LC1	Fondazione - Piano 1	1650	610	1020	610	500	630	45		Default (8)	Default (30)	Conformemente alla norma di analisi	No (secondo norma di analisi)	Nessun miglioramento
18	Muratura in pietrame consolidata con iniezioni LC1	Fondazione - Piano 1	1650	1522.5	1020	1522.5	500	630	85		Default (8)	Default (30)	Conformemente alla norma di analisi	No (secondo norma di analisi)	Nessun miglioramento
19	Muratura in pietrame consolidata con iniezioni LC1	Fondazione - Piano 1	1300	1165	1300	142.5	500	1022.5	100		Default (8)	Default (30)	Conformemente alla norma di analisi	No (secondo norma di analisi)	Nessun miglioramento
20	Muratura in pietrame consolidata con iniezioni LC1	Fondazione - Piano 1	1300	1522.5	1300	1265	500	257.5	100		Default (8)	Default (30)	Conformemente alla norma di analisi	No (secondo norma di analisi)	Miglioramento con rete a betoncino
21	Muratura in pietrame consolidata con iniezioni LC1	Fondazione - Piano 1	1770	142.5	1847.5	142.5	500	77.5	85		Default (8)	Default (30)	Conformemente alla norma di analisi	Si (secondo norma di analisi)	Nessun miglioramento
22	Muratura in pietrame consolidata con iniezioni LC1	Fondazione - Piano 1	1847.5	610	1770	610	500	77.5	45		Default (8)	Default (30)	Conformemente alla norma di analisi	Si (secondo norma di analisi)	Miglioramento con rete a betoncino
23	Muratura in pietrame consolidata con iniezioni LC1	Fondazione - Piano 1	1650	1070	1300	1070	500	350	45		Default (8)	Default (30)	Conformemente alla norma di analisi	No (secondo norma di analisi)	Nessun miglioramento
24	Muratura in pietrame consolidata con iniezioni LC1	Fondazione - Piano 1	1847.5	1070	1770	1070	500	77.5	45		Default (8)	Default (30)	Conformemente alla norma di analisi	Si (secondo norma di analisi)	Miglioramento con rete a betoncino

muratura

Indice	Materiale	Tronco	Punto iniziale		Punto finale		Altezza	Lunghezza	Spessore	Irrigidimenti	Denominatore	Aggancio	Valutazione proporzioni	Secondario	Miglioramenti
			X	Y	X	Y				Interasse					
25	Muratura in pietrame consolidata con iniezioni LC1	Fondazione - Piano 1	1847.5	1522.5	1770	1522.5	500	77.5	85		Default (8)	Default (30)	Conformemente alla norma di analisi	Si (secondo norma di analisi)	Nessun miglioramento
26	Muratura in pietrame consolidata con iniezioni LC1	Fondazione - Piano 1	1847.5	142.5	1847.5	240	500	97.5	85		Default (8)	Default (30)	Conformemente alla norma di analisi	Si (secondo norma di analisi)	Nessun miglioramento
27	Muratura in pietrame consolidata con iniezioni LC1	Fondazione - Piano 1	1847.5	360	1847.5	670	500	310	85		Default (8)	Default (30)	Conformemente alla norma di analisi	No (secondo norma di analisi)	Miglioramento con rete a betoncino
28	Muratura in pietrame consolidata con iniezioni LC1	Fondazione - Piano 1	1847.5	790	1847.5	900	500	110	85		Default (8)	Default (30)	Conformemente alla norma di analisi	Si (secondo norma di analisi)	Nessun miglioramento
29	Muratura in pietrame consolidata con iniezioni LC1	Fondazione - Piano 1	1847.5	1020	1847.5	1325	500	305	85		Default (8)	Default (30)	Conformemente alla norma di analisi	No (secondo norma di analisi)	Nessun miglioramento
30	Muratura in pietrame consolidata con iniezioni LC1	Fondazione - Piano 1	1847.5	1445	1847.5	1522.5	500	77.5	85		Default (8)	Default (30)	Conformemente alla norma di analisi	Si (secondo norma di analisi)	Nessun miglioramento
31	Muratura in pietrame consolidata con iniezioni LC1	Piano 1 - copertura	135	240	135	135	560	105	70		Default (8)	Default (30)	Conformemente alla norma di analisi	Si (secondo norma di analisi)	Nessun miglioramento
32	Muratura in pietrame consolidata con iniezioni LC1	Piano 1 - copertura	135	460	135	360	560	100	70		Default (8)	Default (30)	Conformemente alla norma di analisi	Si (secondo norma di analisi)	Nessun miglioramento
33	Muratura in pietrame consolidata con iniezioni LC1	Piano 1 - copertura	135	880	135	560	560	320	70		Default (8)	Default (30)	Conformemente alla norma di analisi	No (secondo norma di analisi)	Nessun miglioramento
34	Muratura in pietrame consolidata con iniezioni LC1	Piano 1 - copertura	135	1325	135	1030	560	295	70		Default (8)	Default (30)	Conformemente alla norma di analisi	No (secondo norma di analisi)	Nessun miglioramento
35	Muratura in pietrame consolidata con iniezioni LC1	Piano 1 - copertura	135	1530	135	1445	560	85	70		Default (8)	Default (30)	Conformemente alla norma di analisi	Si (secondo norma di analisi)	Nessun miglioramento
36	Muratura in pietrame consolidata con iniezioni LC1	Piano 1 - copertura	135	135	240	135	560	105	70		Default (8)	Default (30)	Conformemente alla norma di analisi	Si (secondo norma di analisi)	Nessun miglioramento
37	Muratura in pietrame consolidata con iniezioni LC1	Piano 1 - copertura	240	1070	135	1070	560	105	45		Default (8)	Default (30)	Conformemente alla norma di analisi	Si (secondo norma di analisi)	Nessun miglioramento
38	Muratura in pietrame consolidata con iniezioni LC1	Piano 1 - copertura	680	1070	340	1070	560	340	45		Default (8)	Default (30)	Conformemente alla norma di analisi	No (secondo norma di analisi)	Nessun miglioramento
39	Muratura in pietrame consolidata con iniezioni LC1	Piano 1 - copertura	220	1530	135	1530	560	85	70		Default (8)	Default (30)	Conformemente alla norma di analisi	Si (secondo norma di analisi)	Nessun miglioramento
40	Muratura in pietrame consolidata con iniezioni LC1	Piano 1 - copertura	680	240	680	135	560	105	70		Default (8)	Default (30)	Conformemente alla norma di analisi	Si (secondo norma di analisi)	Nessun miglioramento
41	Muratura in pietrame consolidata con iniezioni LC1	Piano 1 - copertura	680	880	680	360	560	520	70		Default (8)	Default (30)	Conformemente alla norma di analisi	No (secondo norma di analisi)	Nessun miglioramento

Indice	Materiale	Tronco	Punto iniziale		Punto finale		Altezza	Lunghezza	Spessore	Irrigidimenti	Denominatore	Aggancio	Valutazione proporzioni	Secondario	Miglioramenti
			X	Y	X	Y				Interasse					
42	Muratura in pietrame consolidata con iniezioni LC1	Piano 1 - copertura	680	1328.4	680	1030	560	298.4	70		Default (8)	Default (30)	Conformemente alla norma di analisi	No (secondo norma di analisi)	Nessun miglioramento
43	Muratura in pietrame consolidata con iniezioni LC1	Piano 1 - copertura	680	1530	680	1445	560	85	70		Default (8)	Default (30)	Conformemente alla norma di analisi	Si (secondo norma di analisi)	Nessun miglioramento
44	Muratura in pietrame consolidata con iniezioni LC1	Piano 1 - copertura	390	135	780	135	560	390	70		Default (8)	Default (30)	Conformemente alla norma di analisi	No (secondo norma di analisi)	Nessun miglioramento
45	Muratura in pietrame consolidata con iniezioni LC1	Piano 1 - copertura	900	610	135	610	560	765	45		Default (8)	Default (30)	Conformemente alla norma di analisi	No (secondo norma di analisi)	Nessun miglioramento
46	Muratura in pietrame consolidata con iniezioni LC1	Piano 1 - copertura	740	1530	320	1530	560	420	70		Default (8)	Default (30)	Conformemente alla norma di analisi	No (secondo norma di analisi)	Nessun miglioramento
47	Muratura in pietrame consolidata con iniezioni LC1	Piano 1 - copertura	900	135	1100	135	560	200	70		Default (8)	Default (30)	Conformemente alla norma di analisi	No (secondo norma di analisi)	Miglioramento con rete a betoncino
48	Muratura in pietrame consolidata con iniezioni LC1	Piano 1 - copertura	1110	1530	840	1530	560	270	70		Default (8)	Default (30)	Conformemente alla norma di analisi	No (secondo norma di analisi)	Miglioramento con rete a betoncino
49	Muratura in pietrame consolidata con iniezioni LC1	Piano 1 - copertura	1220	135	1650	135	560	430	70		Default (8)	Default (30)	Conformemente alla norma di analisi	No (secondo norma di analisi)	Nessun miglioramento
50	Muratura in pietrame consolidata con iniezioni LC1	Piano 1 - copertura	1855	610	1020	610	560	835	45		Default (8)	Default (30)	Conformemente alla norma di analisi	No (secondo norma di analisi)	Miglioramento con rete a betoncino
51	Muratura in pietrame consolidata con iniezioni LC1	Piano 1 - copertura	1640	1530	1210	1530	560	430	70		Default (8)	Default (30)	Conformemente alla norma di analisi	No (secondo norma di analisi)	Nessun miglioramento
52	Muratura in pietrame consolidata con iniezioni LC1	Piano 1 - copertura	1300	240	1300	135	560	105	70		Default (8)	Default (30)	Conformemente alla norma di analisi	Si (secondo norma di analisi)	Nessun miglioramento
53	Muratura in pietrame consolidata con iniezioni LC1	Piano 1 - copertura	1300	880	1300	360	560	520	70		Default (8)	Default (30)	Conformemente alla norma di analisi	No (secondo norma di analisi)	Nessun miglioramento
54	Muratura in pietrame consolidata con iniezioni LC1	Piano 1 - copertura	1300	1328.4	1300	1030	560	298.4	70		Default (8)	Default (30)	Conformemente alla norma di analisi	No (secondo norma di analisi)	Miglioramento con rete a betoncino
55	Muratura in pietrame consolidata con iniezioni LC1	Piano 1 - copertura	1300	1530	1300	1445	560	85	70		Default (8)	Default (30)	Conformemente alla norma di analisi	Si (secondo norma di analisi)	Nessun miglioramento
56	Muratura in pietrame consolidata con iniezioni LC1	Piano 1 - copertura	1770	135	1855	135	560	85	70		Default (8)	Default (30)	Conformemente alla norma di analisi	Si (secondo norma di analisi)	Nessun miglioramento
57	Muratura in pietrame consolidata con iniezioni LC1	Piano 1 - copertura	1855	1070	1300	1070	560	555	45		Default (8)	Default (30)	Conformemente alla norma di analisi	No (secondo norma di analisi)	Miglioramento con rete a betoncino
58	Muratura in pietrame consolidata con iniezioni LC1	Piano 1 - copertura	1855	1530	1740	1530	560	115	70		Default (8)	Default (30)	Conformemente alla norma di analisi	Si (secondo norma di analisi)	Nessun miglioramento
59	Muratura in pietrame consolidata con iniezioni LC1	Piano 1 - copertura	1855	135	1855	240	560	105	70		Default (8)	Default (30)	Conformemente alla norma di analisi	Si (secondo norma di analisi)	Nessun miglioramento

muratura

Indice	Materiale	Tronco	Punto iniziale		Punto finale		Altezza	Lunghezza	Spessore	Irrigidimenti	Denominatore	Aggancio	Valutazione proporzioni	Secondario	Miglioramenti
			X	Y	X	Y				Interasse					
60	Muratura in pietrame consolidata con iniezioni LC1	Piano 1 - copertura	1855	360	1855	870	560	510	70		Default (8)	Default (30)	Conformemente alla norma di analisi	No (secondo norma di analisi)	Nessun miglioramento
61	Muratura in pietrame consolidata con iniezioni LC1	Piano 1 - copertura	1855	1010	1855	1325	560	315	70		Default (8)	Default (30)	Conformemente alla norma di analisi	No (secondo norma di analisi)	Nessun miglioramento
62	Muratura in pietrame consolidata con iniezioni LC1	Piano 1 - copertura	1855	1445	1855	1530	560	85	70		Default (8)	Default (30)	Conformemente alla norma di analisi	Si (secondo norma di analisi)	Nessun miglioramento

1.2.2 Travi di collegamento in muratura

***Indice**: Numero dell'elemento nell'insieme che lo contiene.*
***Materiale**: Muratura di cui è composto l'elemento.*
***Tronco**: Tronco dell'elemento o degli elementi generanti; nel caso non sia identificabile univocamente un tronco vale "Quote generiche"*
***Punto iniziale**: Punto iniziale, in pianta, del piano medio.*
***X**: Coordinata X. [cm]*
***Y**: Coordinata Y. [cm]*
***Punto finale**: Punto finale, in pianta, del piano medio.*
***X**: Coordinata X. [cm]*
***Y**: Coordinata Y. [cm]*
***Altezza**: Altezza media del piano medio. [cm]*
***Lunghezza**: Distanza tra il punto iniziale e il punto finale. [cm]*
***Spessore**: Spessore misurato in direzione ortogonale al piano medio dell'elemento. [cm]*
***Resistenza**: Resistenza a trazione dovuta a caratteristiche proprie del materiale o a dispositivi presenti (catene, cordoli, ecc.). [daN]*
***Miglioramenti**: Miglioramenti.*

Indice	Materiale	Tronco	Punto iniziale		Punto finale		Altezza	Lunghezza	Spessore	Resistenza	Miglioramenti
			X	Y	X	Y					
1	Muratura in pietrame consolidata con iniezioni LC1	Fondazione - Piano 1	142.5	765	142.5	655	150	110	85	Default (30000)	Nessun miglioramento
2	Muratura in pietrame consolidata con iniezioni LC1	Fondazione - Piano 1	142.5	765	142.5	655	200	110	85	Default (30000)	Nessun miglioramento
3	Muratura in pietrame consolidata con iniezioni LC1	Fondazione - Piano 1	142.5	995	142.5	895	150	100	85	Default (30000)	Nessun miglioramento
4	Muratura in pietrame consolidata con iniezioni LC1	Fondazione - Piano 1	142.5	995	142.5	895	200	100	85	Default (30000)	Nessun miglioramento
5	Muratura in pietrame consolidata con iniezioni LC1	Fondazione - Piano 1	142.5	1435	142.5	1315	150	120	85	Default (30000)	Nessun miglioramento
6	Muratura in pietrame consolidata con iniezioni LC1	Fondazione - Piano 1	142.5	1435	142.5	1315	200	120	85	Default (30000)	Nessun miglioramento
7	Muratura in pietrame consolidata con iniezioni LC1	Fondazione - Piano 1	240	142.5	390	142.5	150	150	85	Default (30000)	Nessun miglioramento
8	Muratura in pietrame consolidata con iniezioni LC1	Fondazione - Piano 1	240	142.5	390	142.5	200	150	85	Default (30000)	Nessun miglioramento
9	Muratura in pietrame consolidata con iniezioni LC1	Fondazione - Piano 1	340	610	240	610	200	100	45	Default (30000)	Nessun miglioramento

Indice	Materiale	Tronco	Punto iniziale		Punto finale		Altezza	Lunghezza	Spessore	Resistenza	Miglioramenti
			X	Y	X	Y					
10	Muratura in pietrame consolidata con iniezioni LC1	Fondazione - Piano 1	340	1070	240	1070	200	100	45	Default (30000)	Nessun miglioramento
11	Muratura in pietrame consolidata con iniezioni LC1	Fondazione - Piano 1	340	1522.5	220	1522.5	150	120	85	Default (30000)	Nessun miglioramento
12	Muratura in pietrame consolidata con iniezioni LC1	Fondazione - Piano 1	340	1522.5	220	1522.5	200	120	85	Default (30000)	Nessun miglioramento
13	Muratura in pietrame consolidata con iniezioni LC1	Fondazione - Piano 1	680	805	680	705	200	100	100	Default (30000)	Nessun miglioramento
14	Muratura in pietrame consolidata con iniezioni LC1	Fondazione - Piano 1	780	142.5	900	142.5	200	120	85	Default (30000)	Nessun miglioramento
15	Muratura in pietrame consolidata con iniezioni LC1	Fondazione - Piano 1	1100	142.5	1220	142.5	150	120	85	Default (30000)	Nessun miglioramento
16	Muratura in pietrame consolidata con iniezioni LC1	Fondazione - Piano 1	1100	142.5	1220	142.5	200	120	85	Default (30000)	Nessun miglioramento
17	Muratura in pietrame consolidata con iniezioni LC1	Fondazione - Piano 1	1020	610	900	610	200	120	45	Default (30000)	Nessun miglioramento
18	Muratura in pietrame consolidata con iniezioni LC1	Fondazione - Piano 1	1020	1522.5	900	1522.5	200	120	85	Default (30000)	Nessun miglioramento
19	Muratura in pietrame consolidata con iniezioni LC1	Fondazione - Piano 1	1300	1265	1300	1165	200	100	100	Default (30000)	Miglioramento con rete a betoncino
20	Muratura in pietrame consolidata con iniezioni LC1	Fondazione - Piano 1	1650	142.5	1770	142.5	150	120	85	Default (30000)	Nessun miglioramento
21	Muratura in pietrame consolidata con iniezioni LC1	Fondazione - Piano 1	1650	142.5	1770	142.5	200	120	85	Default (30000)	Nessun miglioramento
22	Muratura in pietrame consolidata con iniezioni LC1	Fondazione - Piano 1	1770	610	1650	610	200	120	45	Default (30000)	Nessun miglioramento
23	Muratura in pietrame consolidata con iniezioni LC1	Fondazione - Piano 1	1770	1070	1650	1070	200	120	45	Default (30000)	Nessun miglioramento
24	Muratura in pietrame consolidata con iniezioni LC1	Fondazione - Piano 1	1770	1522.5	1650	1522.5	200	120	85	Default (30000)	Nessun miglioramento
25	Muratura in pietrame consolidata con iniezioni LC1	Fondazione - Piano 1	1847.5	240	1847.5	360	150	120	85	Default (30000)	Nessun miglioramento
26	Muratura in pietrame consolidata con iniezioni LC1	Fondazione - Piano 1	1847.5	240	1847.5	360	200	120	85	Default (30000)	Nessun miglioramento
27	Muratura in pietrame consolidata con iniezioni LC1	Fondazione - Piano 1	1847.5	670	1847.5	790	200	120	85	Default (30000)	Nessun miglioramento

muratura

Indice	Materiale	Tronco	Punto iniziale		Punto finale		Altezza	Lunghezza	Spessore	Resistenza	Miglioramenti
			X	Y	X	Y					
28	Muratura in pietrame consolidata con iniezioni LC1	Fondazione - Piano 1	1847.5	900	1847.5	1020	150	120	85	Default (30000)	Nessun miglioramento
29	Muratura in pietrame consolidata con iniezioni LC1	Fondazione - Piano 1	1847.5	900	1847.5	1020	200	120	85	Default (30000)	Nessun miglioramento
30	Muratura in pietrame consolidata con iniezioni LC1	Fondazione - Piano 1	1847.5	1325	1847.5	1445	150	120	85	Default (30000)	Nessun miglioramento
31	Muratura in pietrame consolidata con iniezioni LC1	Fondazione - Piano 1	1847.5	1325	1847.5	1445	200	120	85	Default (30000)	Nessun miglioramento
32	Muratura in pietrame consolidata con iniezioni LC1	Piano 1 - copertura	135	360	135	240	150	120	70	Default (30000)	Nessun miglioramento
33	Muratura in pietrame consolidata con iniezioni LC1	Piano 1 - copertura	135	360	135	240	260	120	70	Default (30000)	Nessun miglioramento
34	Muratura in pietrame consolidata con iniezioni LC1	Piano 1 - copertura	135	560	135	460	150	100	70	Default (30000)	Nessun miglioramento
35	Muratura in pietrame consolidata con iniezioni LC1	Piano 1 - copertura	135	560	135	460	260	100	70	Default (30000)	Nessun miglioramento
36	Muratura in pietrame consolidata con iniezioni LC1	Piano 1 - copertura	135	1030	135	880	150	150	70	Default (30000)	Nessun miglioramento
37	Muratura in pietrame consolidata con iniezioni LC1	Piano 1 - copertura	135	1030	135	880	260	150	70	Default (30000)	Nessun miglioramento
38	Muratura in pietrame consolidata con iniezioni LC1	Piano 1 - copertura	135	1445	135	1325	150	120	70	Default (30000)	Nessun miglioramento
39	Muratura in pietrame consolidata con iniezioni LC1	Piano 1 - copertura	135	1445	135	1325	260	120	70	Default (30000)	Nessun miglioramento
40	Muratura in pietrame consolidata con iniezioni LC1	Piano 1 - copertura	240	135	390	135	150	150	70	Default (30000)	Nessun miglioramento
41	Muratura in pietrame consolidata con iniezioni LC1	Piano 1 - copertura	240	135	390	135	260	150	70	Default (30000)	Nessun miglioramento
42	Muratura in pietrame consolidata con iniezioni LC1	Piano 1 - copertura	340	1070	240	1070	360	100	45	Default (30000)	Nessun miglioramento
43	Muratura in pietrame consolidata con iniezioni LC1	Piano 1 - copertura	320	1530	220	1530	150	100	70	Default (30000)	Nessun miglioramento
44	Muratura in pietrame consolidata con iniezioni LC1	Piano 1 - copertura	320	1530	220	1530	260	100	70	Default (30000)	Nessun miglioramento

Indice	Materiale	Tronco	Punto iniziale		Punto finale		Altezza	Lunghezza	Spessore	Resistenza	Miglioramenti
			X	Y	X	Y					
45	Muratura in pietrame consolidata con iniezioni LC1	Piano 1 - copertura	680	360	680	240	260	120	70	Default (30000)	Nessun miglioramento
46	Muratura in pietrame consolidata con iniezioni LC1	Piano 1 - copertura	680	1030	680	880	260	150	70	Default (30000)	Nessun miglioramento
47	Muratura in pietrame consolidata con iniezioni LC1	Piano 1 - copertura	680	1445	680	1328.4	260	116.6	70	Default (30000)	Nessun miglioramento
48	Muratura in pietrame consolidata con iniezioni LC1	Piano 1 - copertura	780	135	900	135	260	120	70	Default (30000)	Nessun miglioramento
49	Muratura in pietrame consolidata con iniezioni LC1	Piano 1 - copertura	1100	135	1220	135	150	120	70	Default (30000)	Nessun miglioramento
50	Muratura in pietrame consolidata con iniezioni LC1	Piano 1 - copertura	1100	135	1220	135	260	120	70	Default (30000)	Nessun miglioramento
51	Muratura in pietrame consolidata con iniezioni LC1	Piano 1 - copertura	1020	610	900	610	260	120	45	Default (30000)	Nessun miglioramento
52	Muratura in pietrame consolidata con iniezioni LC1	Piano 1 - copertura	840	1530	740	1530	260	100	70	Default (30000)	Nessun miglioramento
53	Muratura in pietrame consolidata con iniezioni LC1	Piano 1 - copertura	1210	1530	1110	1530	260	100	70	Default (30000)	Nessun miglioramento
54	Muratura in pietrame consolidata con iniezioni LC1	Piano 1 - copertura	1300	360	1300	240	260	120	70	Default (30000)	Nessun miglioramento
55	Muratura in pietrame consolidata con iniezioni LC1	Piano 1 - copertura	1300	1030	1300	880	260	150	70	Default (30000)	Nessun miglioramento
56	Muratura in pietrame consolidata con iniezioni LC1	Piano 1 - copertura	1300	1445	1300	1328.4	260	116.6	70	Default (30000)	Nessun miglioramento
57	Muratura in pietrame consolidata con iniezioni LC1	Piano 1 - copertura	1650	135	1770	135	150	120	70	Default (30000)	Nessun miglioramento
58	Muratura in pietrame consolidata con iniezioni LC1	Piano 1 - copertura	1650	135	1770	135	260	120	70	Default (30000)	Nessun miglioramento
59	Muratura in pietrame consolidata con iniezioni LC1	Piano 1 - copertura	1740	1530	1640	1530	150	100	70	Default (30000)	Nessun miglioramento
60	Muratura in pietrame consolidata con iniezioni LC1	Piano 1 - copertura	1740	1530	1640	1530	260	100	70	Default (30000)	Nessun miglioramento
61	Muratura in pietrame consolidata con iniezioni LC1	Piano 1 - copertura	1855	240	1855	360	150	120	70	Default (30000)	Nessun miglioramento
62	Muratura in pietrame consolidata con iniezioni LC1	Piano 1 - copertura	1855	240	1855	360	260	120	70	Default (30000)	Nessun miglioramento

muratura

Indice	Materiale	Tronco	Punto iniziale		Punto finale		Altezza	Lunghezza	Spessore	Resistenza	Miglioramenti
			X	Y	X	Y					
63	Muratura in pietrame consolidata con iniezioni LC1	Piano 1 - copertura	1855	870	1855	1010	150	140	70	Default (30000)	Nessun miglioramento
64	Muratura in pietrame consolidata con iniezioni LC1	Piano 1 - copertura	1855	870	1855	1010	260	140	70	Default (30000)	Nessun miglioramento
65	Muratura in pietrame consolidata con iniezioni LC1	Piano 1 - copertura	1855	1325	1855	1445	150	120	70	Default (30000)	Nessun miglioramento
66	Muratura in pietrame consolidata con iniezioni LC1	Piano 1 - copertura	1855	1325	1855	1445	260	120	70	Default (30000)	Nessun miglioramento

1.3 Accelerazioni spettrali

***Ind.vertice**: Indice del valore.*
***T**: Periodo. [s]*
***a/g**: Accelerazione normalizzata ottenuta dividendo l'accelerazione per l'accelerazione di gravità. Il valore è adimensionale.*

Sisma X SLV

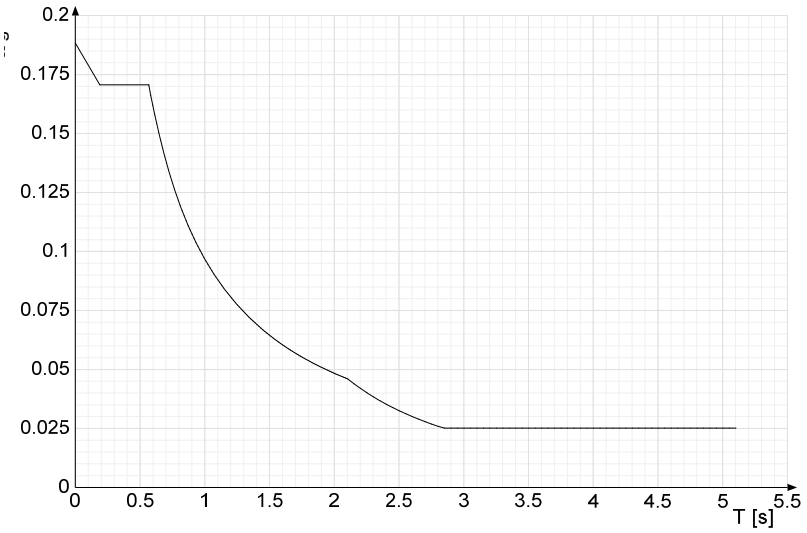

Ind.vertice	T	a/g
1	0	0.188
2	0.189	0.171
3	0.567	0.171
4	0.582	0.166
5	0.598	0.162
6	0.613	0.158
7	0.628	0.154
8	0.643	0.15
9	0.658	0.147
10	0.674	0.144
11	0.689	0.141
12	0.704	0.137
13	0.719	0.135
14	0.734	0.132
15	0.75	0.129
16	0.765	0.127
17	0.78	0.124
18	0.795	0.122
19	0.81	0.119
20	0.826	0.117
21	0.841	0.115
22	0.856	0.113
23	0.871	0.111
24	0.886	0.109
25	0.902	0.107
26	0.917	0.106
27	0.932	0.104
28	0.947	0.102
29	0.962	0.101
30	0.978	0.099
31	0.993	0.097
32	1.008	0.096
33	1.023	0.095

Ind.vertice	T	a/g
34	1.038	0.093
35	1.054	0.092
36	1.069	0.091
37	1.084	0.089
38	1.099	0.088
39	1.114	0.087
40	1.13	0.086
41	1.145	0.085
42	1.16	0.083
43	1.175	0.082
44	1.19	0.081
45	1.206	0.08
46	1.221	0.079
47	1.236	0.078
48	1.251	0.077
49	1.266	0.076
50	1.282	0.076
51	1.297	0.075
52	1.312	0.074
53	1.327	0.073
54	1.342	0.072
55	1.358	0.071
56	1.373	0.07
57	1.388	0.07
58	1.403	0.069
59	1.418	0.068
60	1.434	0.068
61	1.449	0.067
62	1.464	0.066
63	1.479	0.065
64	1.494	0.065
65	1.51	0.064
66	1.525	0.063
67	1.54	0.063
68	1.555	0.062
69	1.57	0.062
70	1.586	0.061
71	1.601	0.06
72	1.616	0.06
73	1.631	0.059
74	1.646	0.059
75	1.662	0.058
76	1.677	0.058
77	1.692	0.057
78	1.707	0.057
79	1.722	0.056
80	1.738	0.056
81	1.753	0.055
82	1.768	0.055
83	1.783	0.054
84	1.798	0.054
85	1.814	0.053
86	1.829	0.053
87	1.844	0.052
88	1.859	0.052
89	1.874	0.052
90	1.89	0.051
91	1.905	0.051
92	1.92	0.05
93	1.935	0.05
94	1.95	0.05
95	1.966	0.049
96	1.981	0.049
97	1.996	0.048
98	2.011	0.048
99	2.026	0.048
100	2.042	0.047
101	2.057	0.047
102	2.072	0.047
103	2.087	0.046
104	2.102	0.046
105	2.152	0.044
106	2.202	0.042
107	2.252	0.04
108	2.302	0.038
109	2.352	0.037
110	2.402	0.035
111	2.452	0.034
112	2.502	0.032
113	2.552	0.031
114	2.602	0.03
115	2.652	0.029
116	2.702	0.028
117	2.752	0.027
118	2.802	0.026
119	2.852	0.025
120	2.902	0.025
121	2.952	0.025
122	3.002	0.025
123	3.052	0.025
124	3.102	0.025
125	3.152	0.025
126	3.202	0.025
127	3.252	0.025
128	3.302	0.025
129	3.352	0.025
130	3.402	0.025
131	3.452	0.025
132	3.502	0.025
133	3.552	0.025
134	3.602	0.025
135	3.652	0.025
136	3.702	0.025
137	3.752	0.025

Ind.vertice	T	a/g
138	3.802	0.025
139	3.852	0.025
140	3.902	0.025
141	3.952	0.025
142	4.002	0.025
143	4.052	0.025
144	4.102	0.025
145	4.152	0.025
146	4.202	0.025
147	4.252	0.025
148	4.302	0.025
149	4.352	0.025
150	4.402	0.025
151	4.452	0.025
152	4.502	0.025
153	4.552	0.025
154	4.602	0.025
155	4.652	0.025
156	4.702	0.025
157	4.752	0.025
158	4.802	0.025
159	4.852	0.025
160	4.902	0.025
161	4.952	0.025
162	5.002	0.025
163	5.052	0.025
164	5.102	0.025

Sisma Y SLV

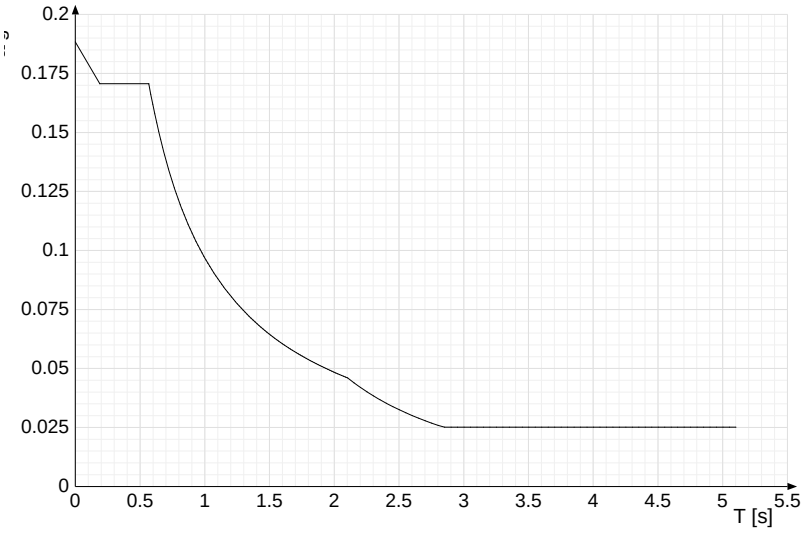

Ind.vertice	T	a/g
1	0	0.188
2	0.189	0.171
3	0.567	0.171
4	0.582	0.166
5	0.598	0.162
6	0.613	0.158
7	0.628	0.154
8	0.643	0.15
9	0.658	0.147
10	0.674	0.144
11	0.689	0.141
12	0.704	0.137
13	0.719	0.135
14	0.734	0.132
15	0.75	0.129
16	0.765	0.127
17	0.78	0.124
18	0.795	0.122
19	0.81	0.119
20	0.826	0.117
21	0.841	0.115
22	0.856	0.113
23	0.871	0.111
24	0.886	0.109
25	0.902	0.107
26	0.917	0.106
27	0.932	0.104
28	0.947	0.102
29	0.962	0.101
30	0.978	0.099
31	0.993	0.097
32	1.008	0.096
33	1.023	0.095
34	1.038	0.093
35	1.054	0.092
36	1.069	0.091
37	1.084	0.089

Ind.vertice	T	a/g
38	1.099	0.088
39	1.114	0.087
40	1.13	0.086
41	1.145	0.085
42	1.16	0.083
43	1.175	0.082
44	1.19	0.081
45	1.206	0.08
46	1.221	0.079
47	1.236	0.078
48	1.251	0.077
49	1.266	0.076
50	1.282	0.076
51	1.297	0.075
52	1.312	0.074
53	1.327	0.073
54	1.342	0.072
55	1.358	0.071
56	1.373	0.07
57	1.388	0.07
58	1.403	0.069
59	1.418	0.068
60	1.434	0.068
61	1.449	0.067
62	1.464	0.066
63	1.479	0.065
64	1.494	0.065
65	1.51	0.064
66	1.525	0.063
67	1.54	0.063
68	1.555	0.062
69	1.57	0.062
70	1.586	0.061
71	1.601	0.06
72	1.616	0.06
73	1.631	0.059
74	1.646	0.059
75	1.662	0.058
76	1.677	0.058
77	1.692	0.057
78	1.707	0.057
79	1.722	0.056
80	1.738	0.056
81	1.753	0.055
82	1.768	0.055
83	1.783	0.054
84	1.798	0.054
85	1.814	0.053
86	1.829	0.053
87	1.844	0.052
88	1.859	0.052
89	1.874	0.052
90	1.89	0.051
91	1.905	0.051
92	1.92	0.05
93	1.935	0.05
94	1.95	0.05
95	1.966	0.049
96	1.981	0.049
97	1.996	0.048
98	2.011	0.048
99	2.026	0.048
100	2.042	0.047
101	2.057	0.047
102	2.072	0.047
103	2.087	0.046
104	2.102	0.046
105	2.152	0.044
106	2.202	0.042
107	2.252	0.04
108	2.302	0.038
109	2.352	0.037
110	2.402	0.035
111	2.452	0.034
112	2.502	0.032
113	2.552	0.031
114	2.602	0.03
115	2.652	0.029
116	2.702	0.028
117	2.752	0.027
118	2.802	0.026
119	2.852	0.025
120	2.902	0.025
121	2.952	0.025
122	3.002	0.025
123	3.052	0.025
124	3.102	0.025
125	3.152	0.025
126	3.202	0.025
127	3.252	0.025
128	3.302	0.025
129	3.352	0.025
130	3.402	0.025
131	3.452	0.025
132	3.502	0.025
133	3.552	0.025
134	3.602	0.025
135	3.652	0.025
136	3.702	0.025
137	3.752	0.025
138	3.802	0.025
139	3.852	0.025
140	3.902	0.025
141	3.952	0.025

Ind.vertice	T	a/g
142	4.002	0.025
143	4.052	0.025
144	4.102	0.025
145	4.152	0.025
146	4.202	0.025
147	4.252	0.025
148	4.302	0.025
149	4.352	0.025
150	4.402	0.025
151	4.452	0.025
152	4.502	0.025
153	4.552	0.025
154	4.602	0.025
155	4.652	0.025
156	4.702	0.025
157	4.752	0.025
158	4.802	0.025
159	4.852	0.025
160	4.902	0.025
161	4.952	0.025
162	5.002	0.025
163	5.052	0.025
164	5.102	0.025

Sisma X SLD

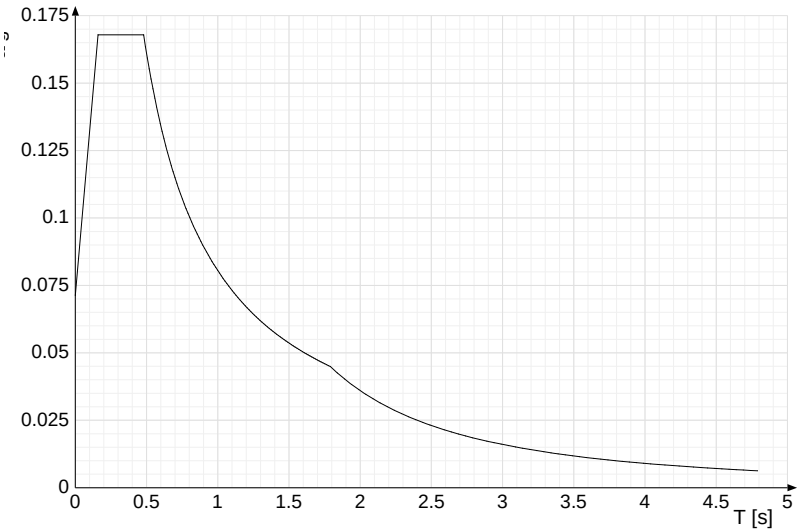

Ind.vertice	T	a/g
1	0	0.071
2	0.16	0.168
3	0.479	0.168
4	0.492	0.164
5	0.505	0.159
6	0.518	0.155
7	0.531	0.152
8	0.544	0.148
9	0.557	0.144
10	0.57	0.141
11	0.583	0.138
12	0.596	0.135
13	0.609	0.132
14	0.622	0.129
15	0.635	0.127
16	0.648	0.124
17	0.661	0.122
18	0.674	0.119
19	0.687	0.117
20	0.7	0.115
21	0.713	0.113
22	0.726	0.111
23	0.739	0.109
24	0.752	0.107
25	0.765	0.105
26	0.778	0.103
27	0.791	0.102
28	0.804	0.1
29	0.817	0.099
30	0.83	0.097
31	0.842	0.095
32	0.855	0.094
33	0.868	0.093
34	0.881	0.091
35	0.894	0.09
36	0.907	0.089
37	0.92	0.087
38	0.933	0.086
39	0.946	0.085
40	0.959	0.084
41	0.972	0.083

Ind.vertice	T	a/g
42	0.985	0.082
43	0.998	0.081
44	1.011	0.08
45	1.024	0.079
46	1.037	0.078
47	1.05	0.077
48	1.063	0.076
49	1.076	0.075
50	1.089	0.074
51	1.102	0.073
52	1.115	0.072
53	1.128	0.071
54	1.141	0.071
55	1.154	0.07
56	1.167	0.069
57	1.18	0.068
58	1.193	0.067
59	1.206	0.067
60	1.219	0.066
61	1.232	0.065
62	1.245	0.065
63	1.258	0.064
64	1.271	0.063
65	1.284	0.063
66	1.297	0.062
67	1.31	0.061
68	1.323	0.061
69	1.336	0.06
70	1.349	0.06
71	1.362	0.059
72	1.375	0.059
73	1.388	0.058
74	1.401	0.057
75	1.414	0.057
76	1.427	0.056
77	1.44	0.056
78	1.453	0.055
79	1.465	0.055
80	1.478	0.054
81	1.491	0.054
82	1.504	0.053
83	1.517	0.053
84	1.53	0.053
85	1.543	0.052
86	1.556	0.052
87	1.569	0.051
88	1.582	0.051
89	1.595	0.05
90	1.608	0.05
91	1.621	0.05
92	1.634	0.049
93	1.647	0.049
94	1.66	0.048
95	1.673	0.048
96	1.686	0.048
97	1.699	0.047
98	1.712	0.047
99	1.725	0.047
100	1.738	0.046
101	1.751	0.046
102	1.764	0.046
103	1.777	0.045
104	1.79	0.045
105	1.84	0.043
106	1.89	0.04
107	1.94	0.038
108	1.99	0.036
109	2.04	0.035
110	2.09	0.033
111	2.14	0.031
112	2.19	0.03
113	2.24	0.029
114	2.29	0.027
115	2.34	0.026
116	2.39	0.025
117	2.44	0.024
118	2.49	0.023
119	2.54	0.022
120	2.59	0.021
121	2.64	0.021
122	2.69	0.02
123	2.74	0.019
124	2.79	0.019
125	2.84	0.018
126	2.89	0.017
127	2.94	0.017
128	2.99	0.016
129	3.04	0.016
130	3.09	0.015
131	3.14	0.015
132	3.19	0.014
133	3.24	0.014
134	3.29	0.013
135	3.34	0.013
136	3.39	0.013
137	3.44	0.012
138	3.49	0.012
139	3.54	0.011
140	3.59	0.011
141	3.64	0.011
142	3.69	0.011
143	3.74	0.01
144	3.79	0.01
145	3.84	0.01

Ind.vertice	T	a/g
146	3.89	0.01
147	3.94	0.009
148	3.99	0.009
149	4.04	0.009
150	4.09	0.009
151	4.14	0.008
152	4.19	0.008
153	4.24	0.008
154	4.29	0.008
155	4.34	0.008
156	4.39	0.007
157	4.44	0.007
158	4.49	0.007
159	4.54	0.007
160	4.59	0.007
161	4.64	0.007
162	4.69	0.007
163	4.74	0.006
164	4.79	0.006

Sisma Y SLD

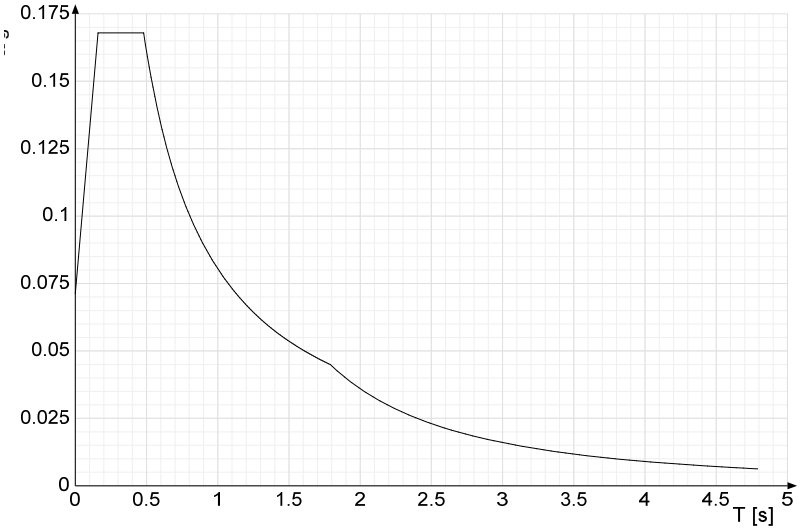

Ind.vertice	T	a/g
1	0	0.071
2	0.16	0.168
3	0.479	0.168
4	0.492	0.164
5	0.505	0.159
6	0.518	0.155
7	0.531	0.152
8	0.544	0.148
9	0.557	0.144
10	0.57	0.141
11	0.583	0.138
12	0.596	0.135
13	0.609	0.132
14	0.622	0.129
15	0.635	0.127
16	0.648	0.124
17	0.661	0.122
18	0.674	0.119
19	0.687	0.117
20	0.7	0.115
21	0.713	0.113
22	0.726	0.111
23	0.739	0.109
24	0.752	0.107
25	0.765	0.105
26	0.778	0.103
27	0.791	0.102
28	0.804	0.1
29	0.817	0.099
30	0.83	0.097
31	0.842	0.095
32	0.855	0.094
33	0.868	0.093
34	0.881	0.091
35	0.894	0.09
36	0.907	0.089
37	0.92	0.087
38	0.933	0.086
39	0.946	0.085
40	0.959	0.084
41	0.972	0.083
42	0.985	0.082
43	0.998	0.081
44	1.011	0.08
45	1.024	0.079

Ind.vertice	T	a/g
46	1.037	0.078
47	1.05	0.077
48	1.063	0.076
49	1.076	0.075
50	1.089	0.074
51	1.102	0.073
52	1.115	0.072
53	1.128	0.071
54	1.141	0.071
55	1.154	0.07
56	1.167	0.069
57	1.18	0.068
58	1.193	0.067
59	1.206	0.067
60	1.219	0.066
61	1.232	0.065
62	1.245	0.065
63	1.258	0.064
64	1.271	0.063
65	1.284	0.063
66	1.297	0.062
67	1.31	0.061
68	1.323	0.061
69	1.336	0.06
70	1.349	0.06
71	1.362	0.059
72	1.375	0.059
73	1.388	0.058
74	1.401	0.057
75	1.414	0.057
76	1.427	0.056
77	1.44	0.056
78	1.453	0.055
79	1.465	0.055
80	1.478	0.054
81	1.491	0.054
82	1.504	0.053
83	1.517	0.053
84	1.53	0.053
85	1.543	0.052
86	1.556	0.052
87	1.569	0.051
88	1.582	0.051
89	1.595	0.05
90	1.608	0.05
91	1.621	0.05
92	1.634	0.049
93	1.647	0.049
94	1.66	0.048
95	1.673	0.048
96	1.686	0.048
97	1.699	0.047
98	1.712	0.047
99	1.725	0.047
100	1.738	0.046
101	1.751	0.046
102	1.764	0.046
103	1.777	0.045
104	1.79	0.045
105	1.84	0.043
106	1.89	0.04
107	1.94	0.038
108	1.99	0.036
109	2.04	0.035
110	2.09	0.033
111	2.14	0.031
112	2.19	0.03
113	2.24	0.029
114	2.29	0.027
115	2.34	0.026
116	2.39	0.025
117	2.44	0.024
118	2.49	0.023
119	2.54	0.022
120	2.59	0.021
121	2.64	0.021
122	2.69	0.02
123	2.74	0.019
124	2.79	0.019
125	2.84	0.018
126	2.89	0.017
127	2.94	0.017
128	2.99	0.016
129	3.04	0.016
130	3.09	0.015
131	3.14	0.015
132	3.19	0.014
133	3.24	0.014
134	3.29	0.013
135	3.34	0.013
136	3.39	0.013
137	3.44	0.012
138	3.49	0.012
139	3.54	0.011
140	3.59	0.011
141	3.64	0.011
142	3.69	0.011
143	3.74	0.01
144	3.79	0.01
145	3.84	0.01
146	3.89	0.01
147	3.94	0.009
148	3.99	0.009
149	4.04	0.009

Ind.vertice	T	a/g
150	4.09	0.009
151	4.14	0.008
152	4.19	0.008
153	4.24	0.008
154	4.29	0.008
155	4.34	0.008
156	4.39	0.007
157	4.44	0.007
158	4.49	0.007
159	4.54	0.007
160	4.59	0.007
161	4.64	0.007
162	4.69	0.007
163	4.74	0.006
164	4.79	0.006

2 Risultati numerici

2.1 Sollecitazioni aste

2.1.1 Convenzioni di segno aste

Le abbreviazioni relative alle sollecitazioni sugli elementi aste sono da intendersi:

- F1 (N): sforzo normale nell'asta;
- F2: sforzo di taglio agente nella direzione dell'asse locale 2;
- F3: sforzo di taglio agente nella direzione dell'asse locale 3;
- M1 (Mt): momento attorno all'asse locale 1; equivale al momento torcente;
- M2: momento attorno all'asse locale 2;
- M3: momento attorno all'asse locale 3;

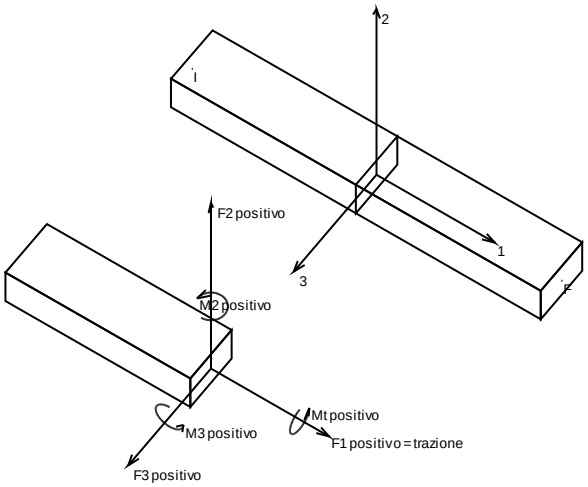

La convenzione sui segni per i parametri di sollecitazione delle aste è la seguente:
presa un'asta con nodo iniziale i e nodo finale f, asse 1 che va da i a f, assi 2 e 3 presi secondo quanto indicato nei paragrafi successivi relativi al sistema locale delle aste sezionando l'asta in un punto e considerando la sezione sinistra del punto in cui si è effettuato il taglio (sezione da cui esce il versore asse 1) i parametri di sollecitazione sono positivi se hanno verso e direzione concordi con il sistema di riferimento locale dell'asta 1, 2, 3 (per i momenti si adotta la regola della mano destra).

Il sistema è definito diversamente per tre categorie di aste, a seconda che siano originate da:

- aste verticali ad esempio pilastri e colonne;
- aste non verticali non di c.a., ad esempio travi di acciaio o legno;
- aste non verticali in c.a.: travi in c.a. di piano, falda o a quota generica.

Nel seguito si indica con 1, 2 e 3 il sistema locale dell'asta che non sempre coincide con gli assi principali della sezione. Si ricorda che per assi principali si intendono gli assi rispetto a cui si ha il raggio di inerzia minimo e massimo. Gli assi 1, 2 e 3 rispettano la regola della mano destra.

Sistema locale aste verticali

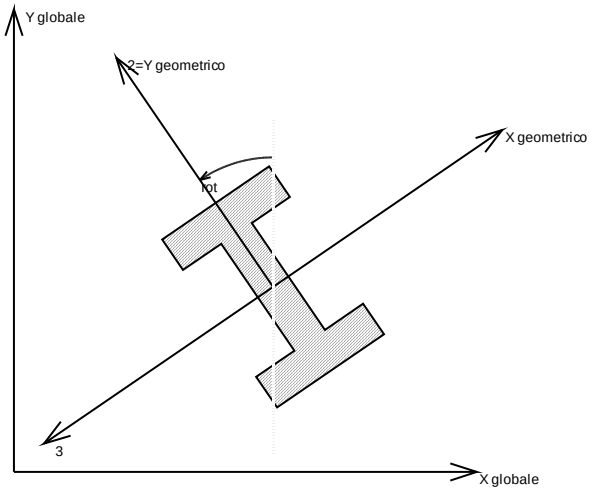

Nella figura si considera l'asse 1 uscente dal foglio (l'osservatore guarda in direzione opposta a quella dell'asse 1).

Sistema locale aste non verticali

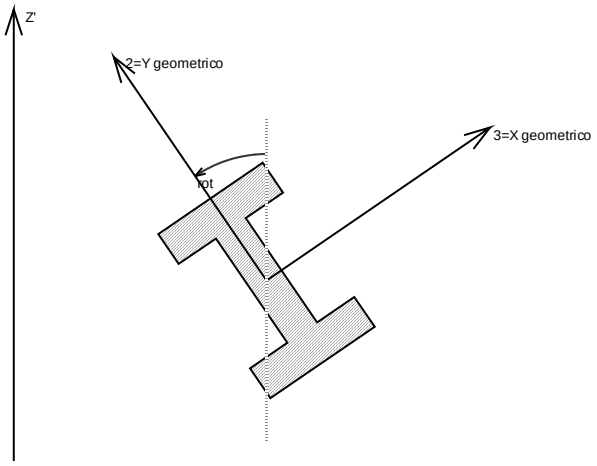

Nella figura si considera l’asse 1 entrante nel foglio (l’osservatore guarda in direzione coincidente a quella dell’asse 1).

L'asse Z’ è illustrato nella figura seguente dove:

- P1 è il punto di inserimento iniziale dell’asta
- P2 è il punto di inserimento finale dell’asta
- N è la normale al piano o falda di inserimento

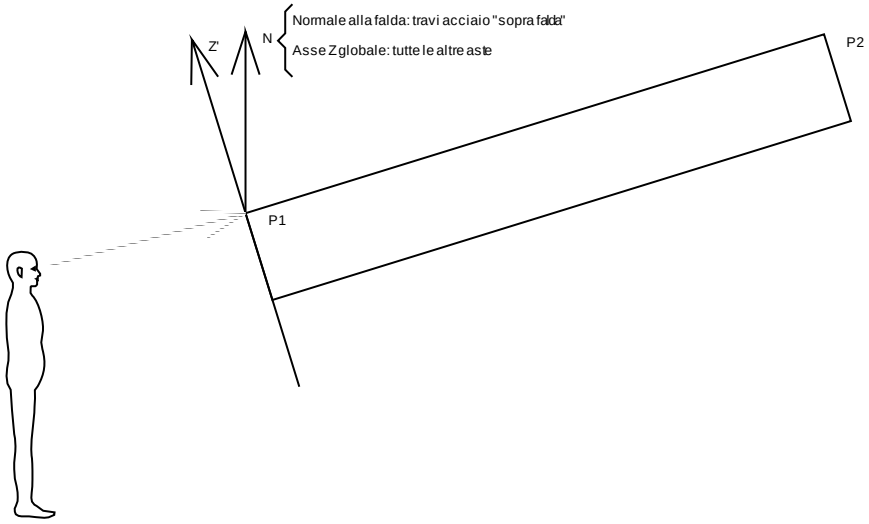

Z’ è quindi l’intersezione tra il piano passante per P1, P2 contenente N e il piano della sezione iniziale dell’asta.

Sistema locale aste derivanti da travi in c.a.

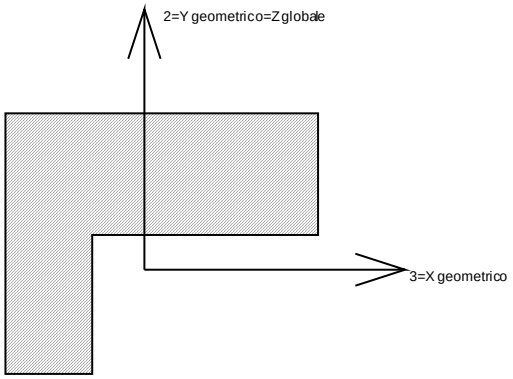

Nella figura si considera l'asse 1 entrante nel foglio (l'osservatore guarda in direzione coincidente a quella dell'asse 1). L'asse 2 è sempre verticale e quindi coincidente con l'asse Z globale nonché con l'asse y geometrico. L'asse 3 coincide con l'asse x geometrico. Si sottolinea il fatto che gli assi 2 e 3 non corrispondono agli assi principali della sezione.

2.2 Sollecitazioni gusci

2.2.1 Convenzioni di segno gusci

Sono individuate distinte convenzioni di segno in relazione al tipo di elemento strutturale a cui il guscio si riferisce:

- convenzione per gusci non verticali, originati ad esempio da piastre e platee
- convenzione per gusci verticali, originati ad esempio da pareti e muri

Convenzione di segno per gusci non verticali

Il sistema di riferimento nel quale sono espressi i parametri di sollecitazione è così definito: origine appartenente al piano dell'elemento, asse x e y contenuti nel piano dell'elemento e terzo asse (z) ortogonale al piano dell'elemento a formare una terna destrogira. In particolare l'asse x ha proiezione in pianta parallelaed equiversa all'asse globale X. Nel caso di piastre orizzontali (caso più comune) gli assi x, y e z locali all'elementosono paralleli ed equiversi agli assi X, Y e Z globali. Si sottolinea che non ha alcun interesse collocare esattamentenel piano dell'elemento la posizione dell'origine in quanto i parametri di sollecitazione sono invarianti rispetto a tale posizione.
In figura è mostrato un elemento infinitesimo di shell orizzontale con indicato il sistema di riferimento e i parametri di sollecitazione Mxx, Myy, Mxy.

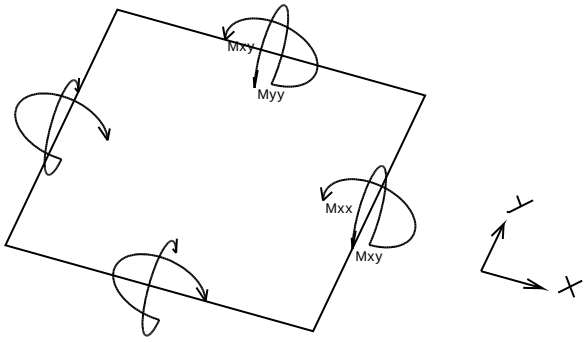

Si definiscono:

- Mxx: momento flettente [Forza*Lunghezza/Lunghezza] agente sul bordo di normale x (verso positivo indicato dalla freccia in figura che tende le fibre inferiori);
- Myy: momento flettente [Forza*Lunghezza/Lunghezza] agente sul bordo di normale y (verso positivo indicato dalla freccia in figura che tende le fibre inferiori);
- Mxy: momento torcente [Forza*Lunghezza/Lunghezza] agente sui bordi (verso positivo indicato dalla freccia in figura);

Per quanto riguarda le sollecitazioni estensionali si faccia riferimento alla figura seguente dove per lo stesso elemento infinitesimo di shell orizzontale con indicato il sistema di riferimento e i parametri di sollecitazione Fxx, Fyy, Fxy.

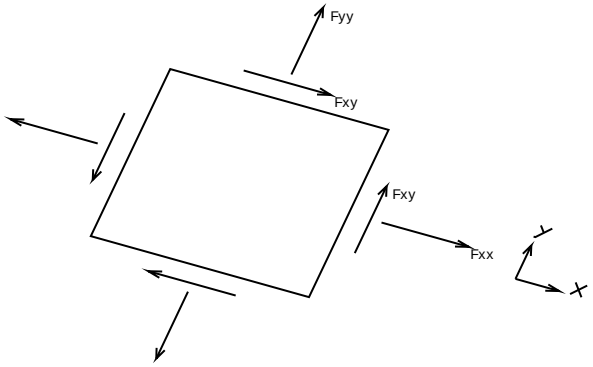

Si definiscono:

- Fxx: sforzo estensionale [Forza/Lunghezza] agente sul bordo di normale x (verso positivo indicato dalla freccia in figura che mette in trazione l'elemento);
- Fyy: sforzo estensionale [Forza/Lunghezza] agente sul bordo di normale all'asse y (verso positivo indicato dalla freccia in figura che mette in trazione l'elemento);
- Fxy: sforzo di taglio [Forza/Lunghezza] agente sui bordi (verso positivo indicato dalla freccia in figura).

Vengono riportati inoltre i tagli fuori dal piano dell'elemento guscio:

- Vx: taglio fuori piano [Forza/Lunghezza] applicato al bordo di normale parallela all'asse x;
- Vy: taglio fuori piano [Forza/Lunghezza] applicato al bordo di normale parallela all'asse y;

Convenzione di segno per gusci verticali

Il sistema di riferimento nel quale sono espressi i parametri di sollecitazione è così definito: origine appartenente al piano dell'elemento, asse O (ascisse) e z (ordinate) contenuti nel piano dell'elemento e terzo asse ortogonale al piano dell'elemento a formare una terna destrogira. In particolare l'asse O è orizzontale e l'asse z parallelo ed equiverso con l'asse Z globale. Si sottolinea che non ha alcun interesse collocare esattamente nel piano dell'elemento la posizione dell'origine in quanto i parametri di sollecitazione sono invarianti rispetto a tale posizione.In figura è mostrato un elemento infinitesimo di shell orizzontale con indicato il sistema di riferimento e i parametri di sollecitazione Moo, Mzz, Moz.

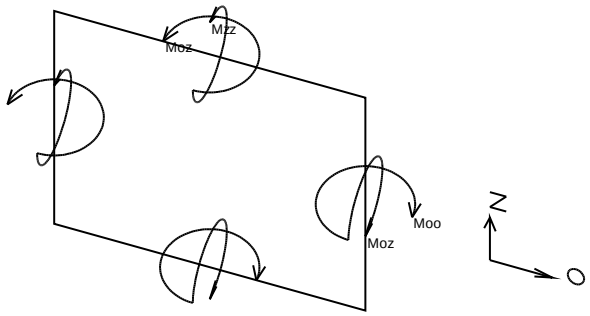

- Moo: momento flettente distribuito [Forza*Lunghezza/Lunghezza] applicato al bordo di normale parallela all'asse O (verso positivo indicato dalla freccia in figura che tende le fibre inferiori);
- Mzz: momento flettente distribuito [Forza*Lunghezza/Lunghezza] applicato al bordo di normale parallela all'asse z (verso positivo indicato dalla freccia in figura che tende le fibre inferiori);
- Moz: momento 'torcente' distribuito [Forza*Lunghezza/Lunghezza] applicato sui bordi (verso positivo indicato dalla freccia in figura);

Per quanto riguarda le sollecitazioni estensionali si faccia riferimento alla figura seguente dove per lo stesso elemento infinitesimo di shell con indicato il sistema di riferimento i parametri di sollecitazione Foo, Fzz, Foz sono rispettivamente:

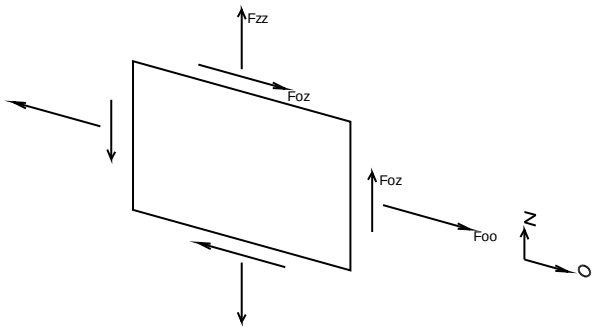

- Fzz: sforzo tensionale distribuito [Forza/Lunghezza] applicato al bordo di normale parallela all'asse z (verso positivo indicato dalla freccia in figura che mette in trazione l'elemento);

- Foo: sforzo tensionale distribuito [Forza/Lunghezza] applicato al bordo di normale parallela all'asse O (verso positivo indicato dalla freccia in figura che mette in trazione l'elemento);

- Foz: sforzo tagliante distribuito [Forza/Lunghezza] applicato sui bordi (verso positivo indicato dalla freccia in figura);

Vengono riportati inoltre i tagli fuori dal piano dell'elemento guscio:

- Vo: taglio fuori piano applicato al bordo di normale parallela all'asse O ;

- Vz: taglio fuori piano applicato al bordo di normale parallela all'asse z .

2.2.2 Sollecitazioni estreme gusci

***Gusc.**: Elemento guscio a cui si riferiscono le sollecitazioni.*
***Ind.**: Indice del guscio.*
***Cont.**: Contesto a cui si riferiscono le sollecitazioni.*
***n.br.**: Nome breve della condizione o combinazione di carico.*
***Nodo**: Nodo su cui si basa il guscio a cui si riferisce la sollecitazione.*
***Ind.**: Indice del nodo.*
***Sollecitazione**: Valori della sollecitazione.*
***M11**: Componente M11 della sollecitazione del guscio nel nodo indicato. [daN*cm/cm]*
***M12**: Componente M12 della sollecitazione del guscio nel nodo indicato. [daN*cm/cm]*
***M22**: Componente M22 della sollecitazione del guscio nel nodo indicato. [daN*cm/cm]*
***F11**: Componente F11 della sollecitazione del guscio nel nodo indicato. [daN/cm]*
***F12**: Componente F12 della sollecitazione del guscio nel nodo indicato. [daN/cm]*
***F22**: Componente F22 della sollecitazione del guscio nel nodo indicato. [daN/cm]*
***V13**: Componente V13 della sollecitazione del guscio nel nodo indicato. [daN/cm]*
***V23**: Componente V23 della sollecitazione del guscio nel nodo indicato. [daN/cm]*

Sollecitazioni con momento M11 minimo
Vengono mostrati i soli 5 gusci più sollecitati.

Gusc.	Cont.	Nodo	Sollecitazione							
Ind.	n.br.	Ind.	M11	M12	M22	F11	F12	F22	V13	V23
5992	SLV FO 4	6251	-2139	176	-782	63	32	-62	33	-25
6516	SLV FO 2	6252	-2120	177	-784	-206	102	-171	33	-25
3821	SLV FO 4	6250	-1956	207	-612	83	-7	-76	37	-18
5524	SLV FO 6	6216	-1796	72	-509	31	-15	15	32	-15
4969	SLV FO 15	6249	-1739	-127	-728	-26	-28	-70	-20	-8

Sollecitazioni con momento M11 massimo
Vengono mostrati i soli 5 gusci più sollecitati.

Gusc.	Cont.	Nodo	Sollecitazione							
Ind.	n.br.	Ind.	M11	M12	M22	F11	F12	F22	V13	V23
5992	SLV FO 13	6251	2136	-177	784	-175	63	-108	-33	25
6516	SLV FO 15	6252	2124	-176	783	52	18	-42	-33	25
1080	SLV FO 2	2310	1819	0	121	-30	0	-119	-49	5
3821	SLV FO 13	6250	1802	-225	652	-135	60	-83	-34	18
3788	SLV FO 4	6265	1743	-99	230	-156	-73	-183	37	8

Sollecitazioni con momento M22 minimo
Vengono mostrati i soli 5 gusci più sollecitati.

Gusc.	Cont.	Nodo	Sollecitazione							
Ind.	n.br.	Ind.	M11	M12	M22	F11	F12	F22	V13	V23
6000	SLV FO 13	4050	-788	-79	-1608	-75	-31	-181	-7	-23
6524	SLV FO 16	4051	-779	-77	-1590	-159	-75	-417	-6	-23
2030	SLV FO 13	4044	-725	-25	-1480	-97	-7	-199	-8	22
2029	SLV FO 13	4044	-723	-135	-1476	-92	-14	-198	11	22
2536	SLV FO 16	4045	-723	-123	-1475	-148	-66	-307	11	23

Sollecitazioni con momento M22 massimo
Vengono mostrati i soli 5 gusci più sollecitati.

Gusc.	Cont.	Nodo	Sollecitazione							
Ind.	n.br.	Ind.	M11	M12	M22	F11	F12	F22	V13	V23
620	SLV FO 3	4186	1315	-442	2683	-58	161	-235	47	-57
633	SLV FO 3	4186	1250	-65	2551	-110	136	-250	-16	-44
156	SLU 20	3858	1194	103	2437	-114	-67	-188	-32	-88
690	SLV FO 16	4193	1148	151	2342	-105	-129	-224	9	-42
410	SLV FO 4	4077	1139	-7	2324	-134	-9	-280	-10	-77

Sollecitazioni con sforzo F11 minimo
Vengono mostrati i soli 5 gusci più sollecitati.

Gusc.	Cont.	Nodo	Sollecitazione							
Ind.	n.br.	Ind.	M11	M12	M22	F11	F12	F22	V13	V23

muratura

Gusc.	Cont.	Nodo	Sollecitazione							
Ind.	n.br.	Ind.	M11	M12	M22	F11	F12	F22	V13	V23
6721	SLU 20	8260	-1	1	-1	-588	145	-463	0	0
6710	SLU 20	8260	-1	1	-1	-576	145	-359	0	0
6709	SLU 20	8260	-1	0	-1	-539	224	-322	0	0
2289	SLU 20	3686	-2	-35	-20	-536	469	-784	1	0
2645	SLV FO 10	2329	-17	-25	-12	-530	254	-68	1	-1

Sollecitazioni con sforzo F11 massimo
Vengono mostrati i soli 5 gusci più sollecitati.

Gusc.	Cont.	Nodo	Sollecitazione							
Ind.	n.br.	Ind.	M11	M12	M22	F11	F12	F22	V13	V23
6417	SLV FO 6	6231	1	101	-14	423	-77	102	-9	0
5893	SLV FO 9	6230	11	-104	12	406	-72	93	7	0
6784	SLV FO 8	6286	415	0	-198	375	0	-30	16	0
6786	SLV FO 8	6275	-665	0	8	336	0	-150	8	0
6260	SLV FO 11	6285	-497	0	212	324	0	-22	-17	-1

Sollecitazioni con sforzo F22 minimo
Vengono mostrati i soli 5 gusci più sollecitati.

Gusc.	Cont.	Nodo	Sollecitazione							
Ind.	n.br.	Ind.	M11	M12	M22	F11	F12	F22	V13	V23
907	SLV FO 16	379	-198	-28	-404	-442	-119	-1058	-2	-4
2639	SLV FO 7	681	-29	43	143	-138	-254	-1000	-3	0
3731	SLU 20	6225	35	0	-17	57	1	-888	0	2
2664	SLV FO 7	2022	7	-7	-148	-25	-144	-882	0	0
297	SLV FO 12	1547	-76	0	175	25	0	-882	3	-9

Sollecitazioni con sforzo F22 massimo
Vengono mostrati i soli 5 gusci più sollecitati.

Gusc.	Cont.	Nodo	Sollecitazione							
Ind.	n.br.	Ind.	M11	M12	M22	F11	F12	F22	V13	V23
3747	SLU 20	6165	27	0	14	-15	-1	369	0	0
1781	X SLV	1527	11	-48	-68	42	107	336	1	-2
1142	SLV FO 11	3514	10	0	328	-97	0	335	0	1
3711	SLU 20	8121	0	0	4	57	-1	335	0	0
3731	SLU 20	6165	27	0	17	-40	0	325	0	0

2.2.3 Sollecitazioni estreme gusci non verticali

***Gusc.**: Elemento guscio a cui si riferiscono le sollecitazioni.*
***Ind.**: Indice del guscio.*
***Cont.**: Contesto a cui si riferiscono le sollecitazioni.*
***n.br.**: Nome breve della condizione o combinazione di carico.*
***Nodo**: Nodo su cui si basa il guscio a cui si riferisce la sollecitazione.*
***Ind.**: Indice del nodo.*
***Sollecitazione**: Valori della sollecitazione.*
***Mxx**: Componente Mxx della sollecitazione del guscio nel nodo indicato. [daN*cm/cm]*
***Mxy**: Componente Mxy della sollecitazione del guscio nel nodo indicato. [daN*cm/cm]*
***Myy**: Componente Myy della sollecitazione del guscio nel nodo indicato. [daN*cm/cm]*
***Fxx**: Componente Fxx della sollecitazione del guscio nel nodo indicato. [daN/cm]*
***Fxy**: Componente Fxy della sollecitazione del guscio nel nodo indicato. [daN/cm]*
***Fyy**: Componente Fyy della sollecitazione del guscio nel nodo indicato. [daN/cm]*
***Vx**: Componente Vo della sollecitazione del guscio nel nodo indicato. [daN/cm]*
***Vy**: Componente Vz della sollecitazione del guscio nel nodo indicato. [daN/cm]*

Sollecitazioni con momento Mxx minimo
Vengono mostrati i soli 5 gusci più sollecitati.

Gusc.	Cont.	Nodo	Sollecitazione							
Ind.	n.br.	Ind.	Mxx	Mxy	Myy	Fxx	Fxy	Fyy	Vx	Vy

Sollecitazioni con momento Mxx massimo
Vengono mostrati i soli 5 gusci più sollecitati.

Gusc.	Cont.	Nodo	Sollecitazione							
Ind.	n.br.	Ind.	Mxx	Mxy	Myy	Fxx	Fxy	Fyy	Vx	Vy

Sollecitazioni con momento Myy minimo
Vengono mostrati i soli 5 gusci più sollecitati.

Gusc.	Cont.	Nodo	Sollecitazione

Ind.	n.br.	Ind.	Mxx	Mxy	Myy	Fxx	Fxy	Fyy	Vx	Vy

Sollecitazioni con momento Myy massimo
Vengono mostrati i soli 5 gusci più sollecitati.

Gusc.	Cont.	Nodo	Sollecitazione							
Ind.	n.br.	Ind.	Mxx	Mxy	Myy	Fxx	Fxy	Fyy	Vx	Vy

Sollecitazioni con sforzo Fxx minimo
Vengono mostrati i soli 5 gusci più sollecitati.

Gusc.	Cont.	Nodo	Sollecitazione							
Ind.	n.br.	Ind.	Mxx	Mxy	Myy	Fxx	Fxy	Fyy	Vx	Vy

Sollecitazioni con sforzo Fxx massimo
Vengono mostrati i soli 5 gusci più sollecitati.

Gusc.	Cont.	Nodo	Sollecitazione							
Ind.	n.br.	Ind.	Mxx	Mxy	Myy	Fxx	Fxy	Fyy	Vx	Vy

Sollecitazioni con sforzo Fyy minimo
Vengono mostrati i soli 5 gusci più sollecitati.

Gusc.	Cont.	Nodo	Sollecitazione							
Ind.	n.br.	Ind.	Mxx	Mxy	Myy	Fxx	Fxy	Fyy	Vx	Vy

Sollecitazioni con sforzo Fyy massimo
Vengono mostrati i soli 5 gusci più sollecitati.

Gusc.	Cont.	Nodo	Sollecitazione							
Ind.	n.br.	Ind.	Mxx	Mxy	Myy	Fxx	Fxy	Fyy	Vx	Vy

2.2.4 Sollecitazioni estreme gusci verticali

***Gusc.**: Elemento guscio a cui si riferiscono le sollecitazioni.*
***Ind.**: Indice del guscio.*
***Cont.**: Contesto a cui si riferiscono le sollecitazioni.*
***n.br.**: Nome breve della condizione o combinazione di carico.*
***Nodo**: Nodo su cui si basa il guscio a cui si riferisce la sollecitazione.*
***Ind.**: Indice del nodo.*
***Sollecitazione**: Valori della sollecitazione.*
***Moo**: Componente Moo della sollecitazione del guscio nel nodo indicato. [daN*cm/cm]*
***Moz**: Componente Moz della sollecitazione del guscio nel nodo indicato. [daN*cm/cm]*
***Mzz**: Componente Mzz della sollecitazione del guscio nel nodo indicato. [daN*cm/cm]*
***Foo**: Componente Foo della sollecitazione del guscio nel nodo indicato. [daN/cm]*
***Foz**: Componente Foz della sollecitazione del guscio nel nodo indicato. [daN/cm]*
***Fzz**: Componente Fzz della sollecitazione del guscio nel nodo indicato. [daN/cm]*
***Vo**: Componente Vo della sollecitazione del guscio nel nodo indicato. [daN/cm]*
***Vz**: Componente Vz della sollecitazione del guscio nel nodo indicato. [daN/cm]*

Sollecitazioni con momento Moo minimo
Vengono mostrati i soli 5 gusci più sollecitati.

Gusc.	Cont.	Nodo	Sollecitazione							
Ind.	n.br.	Ind.	Moo	Moz	Mzz	Foo	Foz	Fzz	Vo	Vz
5992	SLV FO 13	6251	-2136	177	-784	-175	-63	-108	-33	-25
6516	SLV FO 15	6252	-2124	176	-783	52	-18	-42	-33	-25
3821	SLV FO 13	6250	-1802	225	-652	-135	-60	-83	-34	-18
5524	SLV FO 6	6216	-1796	72	-509	31	-15	15	32	-15
3788	SLV FO 4	6265	-1743	99	-230	-156	73	-183	37	-8

Sollecitazioni con momento Moo massimo
Vengono mostrati i soli 5 gusci più sollecitati.

Gusc.	Cont.	Nodo	Sollecitazione							
Ind.	n.br.	Ind.	Moo	Moz	Mzz	Foo	Foz	Fzz	Vo	Vz
5992	SLV FO 4	6251	2139	-176	782	63	-32	-62	33	25
6516	SLV FO 2	6252	2120	-177	784	-206	-102	-171	33	25
3821	SLV FO 4	6250	1956	-207	612	83	7	-76	37	18
1080	SLV FO 2	2310	1819	0	121	-30	0	-119	-49	5
222	SLV FO 16	2300	1658	0	-396	-66	0	-115	36	-8

Sollecitazioni con momento Mzz minimo
Vengono mostrati i soli 5 gusci più sollecitati.

Gusc.	Cont.	Nodo	Sollecitazione							
Ind.	n.br.	Ind.	Moo	Moz	Mzz	Foo	Foz	Fzz	Vo	Vz
620	SLV FO 3	4186	-1315	442	-2683	-58	-161	-235	47	57
633	SLV FO 3	4186	-1250	65	-2551	-110	-136	-250	-16	44
156	SLU 20	3858	-1194	-103	-2437	-114	67	-188	-32	88
690	SLV FO 16	4193	-1148	-151	-2342	-105	129	-224	9	42
275	SLV FO 4	4077	-1139	-32	-2324	-126	24	-269	13	77

Sollecitazioni con momento Mzz massimo
Vengono mostrati i soli 5 gusci più sollecitati.

Gusc.	Cont.	Nodo	Sollecitazione							
Ind.	n.br.	Ind.	Moo	Moz	Mzz	Foo	Foz	Fzz	Vo	Vz
1383	SLU 20	3901	0	0	2172	-4	0	-217	0	-69
1238	SLU 20	3901	0	0	2021	-9	0	-223	0	-64
926	SLU 20	4211	0	0	1788	-9	0	-194	0	-50
1645	SLV FO 6	3877	833	134	1700	-45	-20	-167	4	-30
1658	SLV FO 6	3877	822	369	1677	-38	-51	-149	-32	-29

Sollecitazioni con sforzo Foo minimo
Vengono mostrati i soli 5 gusci più sollecitati.

Gusc.	Cont.	Nodo	Sollecitazione							
Ind.	n.br.	Ind.	Moo	Moz	Mzz	Foo	Foz	Fzz	Vo	Vz
6721	SLU 20	8260	1	-1	1	-588	-145	-463	0	0
6710	SLU 20	8260	1	-1	1	-576	-145	-359	0	0
6709	SLU 20	8260	1	0	1	-539	-224	-322	0	0
2289	SLU 20	3686	2	35	20	-536	-469	-784	1	0
2645	SLV FO 10	2329	17	25	12	-530	-254	-68	1	1

Sollecitazioni con sforzo Foo massimo
Vengono mostrati i soli 5 gusci più sollecitati.

Gusc.	Cont.	Nodo	Sollecitazione							
Ind.	n.br.	Ind.	Moo	Moz	Mzz	Foo	Foz	Fzz	Vo	Vz
6417	SLV FO 6	6231	-1	-101	14	423	77	102	-9	0
5893	SLV FO 9	6230	-11	104	-12	406	72	93	7	0
6784	SLV FO 8	6286	-415	0	198	375	0	-30	16	0
6786	SLV FO 8	6275	665	0	-8	336	0	-150	8	0
6260	SLV FO 11	6285	497	0	-212	324	0	-22	-17	1

Sollecitazioni con sforzo Fzz minimo
Vengono mostrati i soli 5 gusci più sollecitati.

Gusc.	Cont.	Nodo	Sollecitazione							
Ind.	n.br.	Ind.	Moo	Moz	Mzz	Foo	Foz	Fzz	Vo	Vz
907	SLV FO 16	379	198	28	404	-442	119	-1058	-2	4
2639	SLV FO 7	681	29	-43	-143	-138	254	-1000	-3	0
3731	SLU 20	6225	-35	0	17	57	-1	-888	0	-2
2664	SLV FO 7	2022	-7	7	148	-25	144	-882	0	0
297	SLV FO 12	1547	76	0	-175	25	0	-882	3	9

Sollecitazioni con sforzo Fzz massimo
Vengono mostrati i soli 5 gusci più sollecitati.

Gusc.	Cont.	Nodo	Sollecitazione							
Ind.	n.br.	Ind.	Moo	Moz	Mzz	Foo	Foz	Fzz	Vo	Vz
3747	SLU 20	6165	-27	0	-14	-15	1	369	0	0
1781	X SLV	1527	11	-48	-68	42	107	336	1	-2
1142	SLV FO 11	3514	10	0	328	-97	0	335	0	1
3711	SLU 20	8121	0	0	-4	57	1	335	0	0
3731	SLU 20	6165	-27	0	-17	-40	0	325	0	0

2.3 Spostamenti di interpiano

***Nodo inferiore**: Nodo inferiore.*
*   ***I.**: Numero dell'elemento nell'insieme che lo contiene.*
*   ***Pos.**: Coordinate del nodo.*
    *   ***X**: Coordinata X. [cm]*
    *   ***Y**: Coordinata Y. [cm]*
    *   ***Z**: Coordinata Z. [cm]*

***Nodo superiore**: Nodo superiore.*
*   ***I.**: Numero dell'elemento nell'insieme che lo contiene.*

***Pos.**: Coordinate del nodo.*
***Z**: Coordinata Z. [cm]*
***Spost. rel.**: Spostamento relativo. Il valore è adimensionale.*
***Comb.**: Combinazione.*
***n.b.**: Nome breve o compatto della combinazione di carico.*
***Spostamento inferiore**: Spostamento in pianta del nodo inferiore.*
***X**: Coordinata X. [cm]*
***Y**: Coordinata Y. [cm]*
***Spostamento superiore**: Spostamento in pianta del nodo superiore.*
***X**: Coordinata X. [cm]*
***Y**: Coordinata Y. [cm]*
***S.V.**: Si intende non verificato qualora lo spostamento relativo sia superiore al valore limite espresso nelle preferenze di analisi.*
limite SLD = 0,003

Nodo inferiore				Nodo superiore		Spost. rel.	Comb.	Spostamento inferiore		Spostamento superiore		S.V.
I.	Pos.			I.	Pos.		n.b.	X	Y	X	Y	
	X	Y	Z		Z							
47	142.5	142.5	-50	3858	450	0.000246	SLD 1	-0.002	-0.001	-0.109	-0.061	si
47	142.5	142.5	-50	3858	450	0.000254	SLD 2	-0.002	-0.001	-0.121	-0.046	si
47	142.5	142.5	-50	3858	450	0.000208	SLD 3	-0.002	0	-0.105	0.002	si
47	142.5	142.5	-50	3858	450	0.000233	SLD 4	-0.002	0	-0.117	0.017	si
47	142.5	142.5	-50	3858	450	0.000252	SLD 5	-0.001	-0.001	-0.033	-0.123	si
47	142.5	142.5	-50	3858	450	0.000229	SLD 6	-0.001	-0.001	-0.046	-0.106	si
47	142.5	142.5	-50	3858	450	0.000183	SLD 7	-0.001	0	-0.021	0.089	si
47	142.5	142.5	-50	3858	450	0.000221	SLD 8	-0.001	0	-0.033	0.106	si
47	142.5	142.5	-50	3858	450	0.000232	SLD 9	0	-0.002	0.035	-0.112	si
47	142.5	142.5	-50	3858	450	0.000193	SLD 10	0	-0.001	0.022	-0.095	si
47	142.5	142.5	-50	3858	450	0.000222	SLD 11	0	0	0.048	0.1	si
47	142.5	142.5	-50	3858	450	0.000244	SLD 12	0	0	0.035	0.117	si
47	142.5	142.5	-50	3858	450	0.00024	SLD 13	0.001	-0.001	0.119	-0.024	si
47	142.5	142.5	-50	3858	450	0.000214	SLD 14	0.001	-0.001	0.107	-0.009	si
47	142.5	142.5	-50	3858	450	0.000256	SLD 15	0.001	-0.001	0.122	0.04	si
47	142.5	142.5	-50	3858	450	0.000247	SLD 16	0.001	-0.001	0.111	0.055	si
61	680	142.5	-50	3872	450	0.000223	SLD 1	-0.001	-0.001	-0.109	-0.029	si
61	680	142.5	-50	3872	450	0.000243	SLD 2	-0.002	-0.001	-0.121	-0.024	si
61	680	142.5	-50	3872	450	0.00022	SLD 3	-0.001	0	-0.105	0.036	si
61	680	142.5	-50	3872	450	0.000245	SLD 4	-0.001	0	-0.117	0.041	si
61	680	142.5	-50	3872	450	0.000229	SLD 5	-0.001	-0.002	-0.033	-0.112	si
61	680	142.5	-50	3872	450	0.000228	SLD 6	-0.001	-0.002	-0.046	-0.106	si
61	680	142.5	-50	3872	450	0.000215	SLD 7	0	0	-0.021	0.106	si
61	680	142.5	-50	3872	450	0.000231	SLD 8	0	0.001	-0.033	0.112	si
61	680	142.5	-50	3872	450	0.00024	SLD 9	0	-0.002	0.035	-0.117	si
61	680	142.5	-50	3872	450	0.000223	SLD 10	0	-0.002	0.022	-0.111	si
61	680	142.5	-50	3872	450	0.000222	SLD 11	0.001	0	0.048	0.101	si
61	680	142.5	-50	3872	450	0.000223	SLD 12	0	0	0.035	0.106	si
61	680	142.5	-50	3872	450	0.000251	SLD 13	0.001	-0.001	0.119	-0.046	si
61	680	142.5	-50	3872	450	0.000227	SLD 14	0.001	-0.001	0.107	-0.041	si
61	680	142.5	-50	3872	450	0.000245	SLD 15	0.001	-0.001	0.122	0.019	si
61	680	142.5	-50	3872	450	0.000225	SLD 16	0.001	-0.001	0.111	0.024	si
74	1300	142.5	-50	3887	450	0.000221	SLD 1	-0.001	-0.001	-0.109	-0.026	si
74	1300	142.5	-50	3887	450	0.000246	SLD 2	-0.001	-0.002	-0.121	-0.032	si
74	1300	142.5	-50	3887	450	0.000225	SLD 3	-0.001	-0.001	-0.105	0.042	si
74	1300	142.5	-50	3887	450	0.000242	SLD 4	-0.001	-0.001	-0.117	0.035	si
74	1300	142.5	-50	3887	450	0.000223	SLD 5	0	-0.002	-0.033	-0.109	si
74	1300	142.5	-50	3887	450	0.000244	SLD 6	0	-0.002	-0.046	-0.116	si
74	1300	142.5	-50	3887	450	0.000234	SLD 7	0	0	-0.021	0.116	si
74	1300	142.5	-50	3887	450	0.000227	SLD 8	-0.001	0	-0.033	0.109	si
74	1300	142.5	-50	3887	450	0.000232	SLD 9	0.001	-0.002	0.035	-0.113	si
74	1300	142.5	-50	3887	450	0.00024	SLD 10	0	-0.002	0.022	-0.12	si
74	1300	142.5	-50	3887	450	0.000241	SLD 11	0.001	0.001	0.048	0.112	si
74	1300	142.5	-50	3887	450	0.000219	SLD 12	0	0	0.035	0.104	si
74	1300	142.5	-50	3887	450	0.000247	SLD 13	0.002	-0.001	0.119	-0.04	si
74	1300	142.5	-50	3887	450	0.00023	SLD 14	0.001	-0.001	0.107	-0.046	si
74	1300	142.5	-50	3887	450	0.000248	SLD 15	0.002	0	0.122	0.028	si
74	1300	142.5	-50	3887	450	0.000223	SLD 16	0.001	0	0.111	0.021	si
88	1847.5	142.5	-50	3901	450	0.000218	SLD 1	0	0	-0.109	-0.011	si
88	1847.5	142.5	-50	3901	450	0.000246	SLD 2	-0.001	-0.001	-0.121	-0.027	si
88	1847.5	142.5	-50	3901	450	0.00024	SLD 3	0	0	-0.105	0.058	si
88	1847.5	142.5	-50	3901	450	0.000247	SLD 4	-0.001	0	-0.117	0.042	si
88	1847.5	142.5	-50	3901	450	0.000214	SLD 5	0.001	-0.001	-0.033	-0.102	si
88	1847.5	142.5	-50	3901	450	0.000257	SLD 6	0	-0.001	-0.046	-0.121	si
88	1847.5	142.5	-50	3901	450	0.000259	SLD 7	0	0	-0.021	0.128	si
88	1847.5	142.5	-50	3901	450	0.000229	SLD 8	0	0	-0.033	0.109	si
88	1847.5	142.5	-50	3901	450	0.000234	SLD 9	0.001	-0.001	0.035	-0.113	si
88	1847.5	142.5	-50	3901	450	0.000263	SLD 10	0.001	-0.001	0.022	-0.131	si
88	1847.5	142.5	-50	3901	450	0.000253	SLD 11	0.001	0	0.048	0.118	si
88	1847.5	142.5	-50	3901	450	0.00021	SLD 12	0.001	0	0.035	0.099	si
88	1847.5	142.5	-50	3901	450	0.00025	SLD 13	0.002	-0.001	0.119	-0.045	si
88	1847.5	142.5	-50	3901	450	0.000243	SLD 14	0.002	-0.001	0.107	-0.062	si
88	1847.5	142.5	-50	3901	450	0.000247	SLD 15	0.002	0	0.122	0.024	si
88	1847.5	142.5	-50	3901	450	0.000219	SLD 16	0.001	-0.001	0.111	0.008	si
157	142.5	610	-50	3969	450	0.00026	SLD 1	-0.001	0	-0.116	-0.061	si
157	142.5	610	-50	3969	450	0.000253	SLD 2	-0.001	0	-0.119	-0.046	si
157	142.5	610	-50	3969	450	0.000224	SLD 3	-0.001	0	-0.113	0.002	si
157	142.5	610	-50	3969	450	0.000232	SLD 4	-0.001	0	-0.116	0.017	si
157	142.5	610	-50	3969	450	0.000256	SLD 5	0	-0.001	-0.038	-0.123	si
157	142.5	610	-50	3969	450	0.000227	SLD 6	0	0	-0.041	-0.106	si
157	142.5	610	-50	3969	450	0.000185	SLD 7	0	0	-0.028	0.089	si
157	142.5	610	-50	3969	450	0.000219	SLD 8	0	0.001	-0.031	0.106	si
157	142.5	610	-50	3969	450	0.000231	SLD 9	0	-0.001	0.032	-0.112	si
157	142.5	610	-50	3969	450	0.000198	SLD 10	0	-0.001	0.029	-0.095	si
157	142.5	610	-50	3969	450	0.000216	SLD 11	0	0	0.042	0.1	si
157	142.5	610	-50	3969	450	0.000245	SLD 12	0	0.001	0.038	0.117	si
157	142.5	610	-50	3969	450	0.000237	SLD 13	0	0	0.117	-0.024	si
157	142.5	610	-50	3969	450	0.000227	SLD 14	0	0	0.114	-0.009	si
157	142.5	610	-50	3969	450	0.000251	SLD 15	0	0	0.119	0.04	si
157	142.5	610	-50	3969	450	0.000257	SLD 16	0	0	0.117	0.055	si
168	680	610	-50	3983	450	0.000237	SLD 1	-0.001	0	-0.116	-0.029	si
168	680	610	-50	3983	450	0.00024	SLD 2	-0.001	0	-0.119	-0.024	si
168	680	610	-50	3983	450	0.000235	SLD 3	-0.001	0.001	-0.113	0.036	si

Nodo inferiore				Nodo superiore		Spost. rel.	Comb.	Spostamento inferiore		Spostamento superiore		S.V.
I.	Pos.			I.	Pos.		n.b.	X	Y	X	Y	
	X	Y	Z		Z							
168	680	610	-50	3983	450	0.000243	SLD 4	-0.001	0.001	-0.116	0.041	si
168	680	610	-50	3983	450	0.000233	SLD 5	0	-0.001	-0.038	-0.112	si
168	680	610	-50	3983	450	0.000225	SLD 6	0	-0.001	-0.041	-0.106	si
168	680	610	-50	3983	450	0.000217	SLD 7	0	0.001	-0.028	0.106	si
168	680	610	-50	3983	450	0.000229	SLD 8	0	0.001	-0.031	0.112	si
168	680	610	-50	3983	450	0.00024	SLD 9	0	-0.001	0.032	-0.117	si
168	680	610	-50	3983	450	0.000228	SLD 10	0	-0.001	0.029	-0.111	si
168	680	610	-50	3983	450	0.000216	SLD 11	0	0.001	0.042	0.101	si
168	680	610	-50	3983	450	0.000224	SLD 12	0	0.001	0.038	0.106	si
168	680	610	-50	3983	450	0.000249	SLD 13	0.001	-0.001	0.117	-0.046	si
168	680	610	-50	3983	450	0.00024	SLD 14	0.001	0	0.114	-0.041	si
168	680	610	-50	3983	450	0.00024	SLD 15	0.001	0	0.119	0.019	si
168	680	610	-50	3983	450	0.000236	SLD 16	0.001	0	0.117	0.024	si
181	1300	610	-50	3998	450	0.000235	SLD 1	-0.001	-0.001	-0.116	-0.026	si
181	1300	610	-50	3998	450	0.000243	SLD 2	-0.001	-0.001	-0.119	-0.032	si
181	1300	610	-50	3998	450	0.000239	SLD 3	-0.001	0	-0.113	0.042	si
181	1300	610	-50	3998	450	0.00024	SLD 4	-0.001	0	-0.116	0.035	si
181	1300	610	-50	3998	450	0.000227	SLD 5	0	-0.001	-0.038	-0.109	si
181	1300	610	-50	3998	450	0.000242	SLD 6	0	-0.002	-0.041	-0.116	si
181	1300	610	-50	3998	450	0.000235	SLD 7	0	0.001	-0.028	0.116	si
181	1300	610	-50	3998	450	0.000224	SLD 8	0	0.001	-0.031	0.109	si
181	1300	610	-50	3998	450	0.000232	SLD 9	0	-0.001	0.032	-0.113	si
181	1300	610	-50	3998	450	0.000244	SLD 10	0	-0.002	0.029	-0.12	si
181	1300	610	-50	3998	450	0.000235	SLD 11	0	0.002	0.042	0.112	si
181	1300	610	-50	3998	450	0.00022	SLD 12	0	0.001	0.038	0.104	si
181	1300	610	-50	3998	450	0.000244	SLD 13	0.001	0	0.117	-0.04	si
181	1300	610	-50	3998	450	0.000243	SLD 14	0.001	0	0.114	-0.046	si
181	1300	610	-50	3998	450	0.000243	SLD 15	0.001	0.001	0.119	0.028	si
181	1300	610	-50	3998	450	0.000235	SLD 16	0.001	0.001	0.117	0.021	si
193	1847.5	610	-50	4012	450	0.000232	SLD 1	0	0	-0.116	-0.011	si
193	1847.5	610	-50	4012	450	0.000243	SLD 2	0	0	-0.119	-0.027	si
193	1847.5	610	-50	4012	450	0.000253	SLD 3	0	0	-0.113	0.058	si
193	1847.5	610	-50	4012	450	0.000245	SLD 4	0	0	-0.116	0.042	si
193	1847.5	610	-50	4012	450	0.000217	SLD 5	0	0	-0.038	-0.102	si
193	1847.5	610	-50	4012	450	0.000254	SLD 6	0	-0.001	-0.041	-0.121	si
193	1847.5	610	-50	4012	450	0.000261	SLD 7	0	0	-0.028	0.128	si
193	1847.5	610	-50	4012	450	0.000227	SLD 8	0	0	-0.031	0.109	si
193	1847.5	610	-50	4012	450	0.000233	SLD 9	0	-0.001	0.032	-0.113	si
193	1847.5	610	-50	4012	450	0.000267	SLD 10	0	-0.001	0.029	-0.131	si
193	1847.5	610	-50	4012	450	0.000249	SLD 11	0	0	0.042	0.118	si
193	1847.5	610	-50	4012	450	0.000212	SLD 12	0	0	0.038	0.099	si
193	1847.5	610	-50	4012	450	0.000248	SLD 13	0.001	0	0.117	-0.045	si
193	1847.5	610	-50	4012	450	0.000257	SLD 14	0.001	0	0.114	-0.062	si
193	1847.5	610	-50	4012	450	0.000242	SLD 15	0.001	0	0.119	0.024	si
193	1847.5	610	-50	4012	450	0.000232	SLD 16	0.001	0	0.117	0.008	si
254	142.5	1070	-50	4077	450	0.000269	SLD 1	0	0	-0.12	-0.061	si
254	142.5	1070	-50	4077	450	0.000246	SLD 2	0	0	-0.115	-0.046	si
254	142.5	1070	-50	4077	450	0.000246	SLD 3	0	0	-0.123	0.002	si
254	142.5	1070	-50	4077	450	0.000237	SLD 4	0	0	-0.118	0.017	si
254	142.5	1070	-50	4077	450	0.000254	SLD 5	0	-0.001	-0.034	-0.123	si
254	142.5	1070	-50	4077	450	0.000219	SLD 6	0	0	-0.028	-0.106	si
254	142.5	1070	-50	4077	450	0.000197	SLD 7	0	0	-0.044	0.089	si
254	142.5	1070	-50	4077	450	0.000223	SLD 8	0	0.001	-0.037	0.106	si
254	142.5	1070	-50	4077	450	0.000235	SLD 9	0	-0.001	0.038	-0.112	si
254	142.5	1070	-50	4077	450	0.000209	SLD 10	0	0	0.044	-0.095	si
254	142.5	1070	-50	4077	450	0.000207	SLD 11	0	0	0.028	0.1	si
254	142.5	1070	-50	4077	450	0.000242	SLD 12	0	0	0.034	0.117	si
254	142.5	1070	-50	4077	450	0.000239	SLD 13	0	0	0.118	-0.024	si
254	142.5	1070	-50	4077	450	0.000247	SLD 14	0	0	0.123	-0.009	si
254	142.5	1070	-50	4077	450	0.000242	SLD 15	0	0	0.115	0.04	si
254	142.5	1070	-50	4077	450	0.000264	SLD 16	0	0	0.12	0.055	si
266	680	1070	-50	4091	450	0.000247	SLD 1	0	-0.001	-0.12	-0.029	si
266	680	1070	-50	4091	450	0.000234	SLD 2	0	-0.001	-0.115	-0.024	si
266	680	1070	-50	4091	450	0.000256	SLD 3	0	0	-0.123	0.036	si
266	680	1070	-50	4091	450	0.000249	SLD 4	0	0	-0.118	0.041	si
266	680	1070	-50	4091	450	0.000231	SLD 5	0	-0.001	-0.034	-0.112	si
266	680	1070	-50	4091	450	0.000217	SLD 6	0	-0.001	-0.028	-0.106	si
266	680	1070	-50	4091	450	0.000227	SLD 7	0	0.001	-0.044	0.106	si
266	680	1070	-50	4091	450	0.000233	SLD 8	0	0.001	-0.037	0.112	si
266	680	1070	-50	4091	450	0.000243	SLD 9	0	-0.001	0.038	-0.117	si
266	680	1070	-50	4091	450	0.000237	SLD 10	0	-0.001	0.044	-0.111	si
266	680	1070	-50	4091	450	0.000207	SLD 11	0	0.001	0.028	0.101	si
266	680	1070	-50	4091	450	0.00022	SLD 12	0	0.001	0.034	0.106	si
266	680	1070	-50	4091	450	0.000252	SLD 13	0	0	0.118	-0.046	si
266	680	1070	-50	4091	450	0.000259	SLD 14	0.001	0	0.123	-0.041	si
266	680	1070	-50	4091	450	0.000231	SLD 15	0.001	0.001	0.115	0.019	si
266	680	1070	-50	4091	450	0.000244	SLD 16	0.001	0.001	0.12	0.024	si
270	1300	1070	-50	4092	450	0.000245	SLD 1	-0.001	0.001	-0.12	-0.026	si
270	1300	1070	-50	4092	450	0.000237	SLD 2	-0.001	0.001	-0.115	-0.032	si
270	1300	1070	-50	4092	450	0.000258	SLD 3	-0.001	0.001	-0.123	0.042	si
270	1300	1070	-50	4092	450	0.000244	SLD 4	-0.001	0.001	-0.118	0.035	si
270	1300	1070	-50	4092	450	0.000227	SLD 5	0	0	-0.034	-0.109	si
270	1300	1070	-50	4092	450	0.000237	SLD 6	0	-0.001	-0.028	-0.116	si
270	1300	1070	-50	4092	450	0.000243	SLD 7	0	0.002	-0.044	0.116	si
270	1300	1070	-50	4092	450	0.000226	SLD 8	0	0.002	-0.037	0.109	si
270	1300	1070	-50	4092	450	0.000237	SLD 9	0	-0.001	0.038	-0.113	si
270	1300	1070	-50	4092	450	0.000254	SLD 10	0	-0.001	0.044	-0.12	si
270	1300	1070	-50	4092	450	0.000226	SLD 11	0	0.002	0.028	0.112	si
270	1300	1070	-50	4092	450	0.000216	SLD 12	0	0.002	0.034	0.104	si
270	1300	1070	-50	4092	450	0.000248	SLD 13	0	0	0.118	-0.04	si
270	1300	1070	-50	4092	450	0.000263	SLD 14	0	0	0.123	-0.046	si
270	1300	1070	-50	4092	450	0.000235	SLD 15	0	0.001	0.115	0.028	si
270	1300	1070	-50	4092	450	0.000244	SLD 16	0	0.001	0.12	0.021	si
282	1847.5	1070	-50	4106	450	0.000241	SLD 1	0	0	-0.12	-0.011	si
282	1847.5	1070	-50	4106	450	0.000235	SLD 2	0	0	-0.115	-0.027	si
282	1847.5	1070	-50	4106	450	0.000272	SLD 3	0	0	-0.123	0.058	si
282	1847.5	1070	-50	4106	450	0.000249	SLD 4	0	0	-0.118	0.042	si
282	1847.5	1070	-50	4106	450	0.000215	SLD 5	0	-0.001	-0.034	-0.102	si
282	1847.5	1070	-50	4106	450	0.000247	SLD 6	0	-0.001	-0.028	-0.121	si

Nodo inferiore				Nodo superiore		Spost. rel.	Comb.	Spostamento inferiore		Spostamento superiore		S.V.
I.	Pos.			I.	Pos.		n.b.	X	Y	X	Y	
	X	Y	Z		Z							
282	1847.5	1070	-50	4106	450	0.00027	SLD 7	0	0	-0.044	0.128	si
282	1847.5	1070	-50	4106	450	0.000231	SLD 8	0	0	-0.037	0.109	si
282	1847.5	1070	-50	4106	450	0.000236	SLD 9	0	-0.001	0.038	-0.113	si
282	1847.5	1070	-50	4106	450	0.000275	SLD 10	0	-0.001	0.044	-0.131	si
282	1847.5	1070	-50	4106	450	0.000241	SLD 11	0	0	0.028	0.118	si
282	1847.5	1070	-50	4106	450	0.000209	SLD 12	0	0	0.034	0.099	si
282	1847.5	1070	-50	4106	450	0.000251	SLD 13	0	0	0.118	-0.045	si
282	1847.5	1070	-50	4106	450	0.000274	SLD 14	0	0	0.123	-0.062	si
282	1847.5	1070	-50	4106	450	0.000234	SLD 15	0	0	0.115	0.024	si
282	1847.5	1070	-50	4106	450	0.00024	SLD 16	0	0	0.12	0.008	si
343	142.5	1522.5	-50	4168	450	0.00028	SLD 1	-0.002	0	-0.128	-0.061	si
343	142.5	1522.5	-50	4168	450	0.000243	SLD 2	-0.002	0	-0.114	-0.046	si
343	142.5	1522.5	-50	4168	450	0.000259	SLD 3	-0.002	0	-0.132	0.002	si
343	142.5	1522.5	-50	4168	450	0.000234	SLD 4	-0.002	0	-0.118	0.017	si
343	142.5	1522.5	-50	4168	450	0.000257	SLD 5	-0.001	0	-0.038	-0.123	si
343	142.5	1522.5	-50	4168	450	0.000217	SLD 6	-0.001	0	-0.023	-0.106	si
343	142.5	1522.5	-50	4168	450	0.000203	SLD 7	-0.001	0.001	-0.051	0.089	si
343	142.5	1522.5	-50	4168	450	0.000221	SLD 8	-0.001	0.001	-0.036	0.106	si
343	142.5	1522.5	-50	4168	450	0.000234	SLD 9	0	0	0.035	-0.112	si
343	142.5	1522.5	-50	4168	450	0.000216	SLD 10	0	0	0.051	-0.095	si
343	142.5	1522.5	-50	4168	450	0.000203	SLD 11	0	0.001	0.022	0.1	si
343	142.5	1522.5	-50	4168	450	0.000243	SLD 12	0	0.001	0.038	0.117	si
343	142.5	1522.5	-50	4168	450	0.000237	SLD 13	0.001	0.001	0.117	-0.024	si
343	142.5	1522.5	-50	4168	450	0.000261	SLD 14	0.001	0.001	0.131	-0.009	si
343	142.5	1522.5	-50	4168	450	0.000238	SLD 15	0.001	0.001	0.113	0.04	si
343	142.5	1522.5	-50	4168	450	0.000274	SLD 16	0.001	0.001	0.127	0.055	si
357	680	1522.5	-50	4182	450	0.000258	SLD 1	-0.002	0	-0.128	-0.029	si
357	680	1522.5	-50	4182	450	0.000229	SLD 2	-0.002	0	-0.114	-0.024	si
357	680	1522.5	-50	4182	450	0.000269	SLD 3	-0.002	0	-0.132	0.036	si
357	680	1522.5	-50	4182	450	0.000246	SLD 4	-0.002	0.001	-0.118	0.041	si
357	680	1522.5	-50	4182	450	0.000234	SLD 5	-0.001	-0.001	-0.038	-0.112	si
357	680	1522.5	-50	4182	450	0.000216	SLD 6	0	-0.001	-0.023	-0.106	si
357	680	1522.5	-50	4182	450	0.000232	SLD 7	-0.001	0.002	-0.051	0.106	si
357	680	1522.5	-50	4182	450	0.000231	SLD 8	-0.001	0.002	-0.036	0.112	si
357	680	1522.5	-50	4182	450	0.000243	SLD 9	0	-0.001	0.035	-0.117	si
357	680	1522.5	-50	4182	450	0.000243	SLD 10	0.001	0	0.051	-0.111	si
357	680	1522.5	-50	4182	450	0.000203	SLD 11	0	0.002	0.022	0.101	si
357	680	1522.5	-50	4182	450	0.000222	SLD 12	0	0.002	0.038	0.106	si
357	680	1522.5	-50	4182	450	0.000249	SLD 13	0.002	0.001	0.117	-0.046	si
357	680	1522.5	-50	4182	450	0.000272	SLD 14	0.002	0.001	0.131	-0.041	si
357	680	1522.5	-50	4182	450	0.000226	SLD 15	0.001	0.001	0.113	0.019	si
357	680	1522.5	-50	4182	450	0.000255	SLD 16	0.002	0.002	0.127	0.024	si
370	1300	1522.5	-50	4197	450	0.000258	SLD 1	-0.002	0.001	-0.128	-0.026	si
370	1300	1522.5	-50	4197	450	0.000234	SLD 2	-0.001	0.001	-0.114	-0.032	si
370	1300	1522.5	-50	4197	450	0.000272	SLD 3	-0.002	0.002	-0.132	0.042	si
370	1300	1522.5	-50	4197	450	0.000242	SLD 4	-0.001	0.001	-0.118	0.035	si
370	1300	1522.5	-50	4197	450	0.000229	SLD 5	-0.001	0	-0.038	-0.109	si
370	1300	1522.5	-50	4197	450	0.000235	SLD 6	0	-0.001	-0.023	-0.116	si
370	1300	1522.5	-50	4197	450	0.000249	SLD 7	0	0.002	-0.051	0.116	si
370	1300	1522.5	-50	4197	450	0.000225	SLD 8	0	0.002	-0.036	0.109	si
370	1300	1522.5	-50	4197	450	0.000235	SLD 9	0	-0.001	0.035	-0.113	si
370	1300	1522.5	-50	4197	450	0.000258	SLD 10	0.001	-0.001	0.051	-0.12	si
370	1300	1522.5	-50	4197	450	0.000224	SLD 11	0.001	0.002	0.022	0.112	si
370	1300	1522.5	-50	4197	450	0.000219	SLD 12	0.001	0.001	0.038	0.104	si
370	1300	1522.5	-50	4197	450	0.000244	SLD 13	0.002	0	0.117	-0.04	si
370	1300	1522.5	-50	4197	450	0.000274	SLD 14	0.002	0	0.131	-0.046	si
370	1300	1522.5	-50	4197	450	0.000229	SLD 15	0.002	0.001	0.113	0.028	si
370	1300	1522.5	-50	4197	450	0.000254	SLD 16	0.002	0	0.127	0.021	si
382	1847.5	1522.5	-50	4211	450	0.000255	SLD 1	-0.001	0.001	-0.128	-0.011	si
382	1847.5	1522.5	-50	4211	450	0.000233	SLD 2	-0.001	0	-0.114	-0.027	si
382	1847.5	1522.5	-50	4211	450	0.000286	SLD 3	-0.001	0.001	-0.132	0.058	si
382	1847.5	1522.5	-50	4211	450	0.000248	SLD 4	-0.001	0.001	-0.118	0.042	si
382	1847.5	1522.5	-50	4211	450	0.000219	SLD 5	0	0	-0.038	-0.102	si
382	1847.5	1522.5	-50	4211	450	0.000246	SLD 6	0	0	-0.023	-0.121	si
382	1847.5	1522.5	-50	4211	450	0.000274	SLD 7	0	0.001	-0.051	0.128	si
382	1847.5	1522.5	-50	4211	450	0.000229	SLD 8	0	0.001	-0.036	0.109	si
382	1847.5	1522.5	-50	4211	450	0.000236	SLD 9	0.001	0	0.035	-0.113	si
382	1847.5	1522.5	-50	4211	450	0.00028	SLD 10	0.001	0	0.051	-0.131	si
382	1847.5	1522.5	-50	4211	450	0.000237	SLD 11	0.001	0.001	0.022	0.118	si
382	1847.5	1522.5	-50	4211	450	0.00021	SLD 12	0.001	0.001	0.038	0.099	si
382	1847.5	1522.5	-50	4211	450	0.000248	SLD 13	0.002	0	0.117	-0.045	si
382	1847.5	1522.5	-50	4211	450	0.000286	SLD 14	0.002	0	0.131	-0.062	si
382	1847.5	1522.5	-50	4211	450	0.000228	SLD 15	0.002	0	0.113	0.024	si
382	1847.5	1522.5	-50	4211	450	0.000251	SLD 16	0.002	0	0.127	0.008	si
3858	142.5	142.5	450	8296	1010	0.00024	SLD 1	-0.109	-0.061	-0.205	-0.155	si
3858	142.5	142.5	450	8296	1010	0.000235	SLD 2	-0.121	-0.046	-0.231	-0.118	si
3858	142.5	142.5	450	8296	1010	0.000165	SLD 3	-0.105	0.002	-0.198	-0.001	si
3858	142.5	142.5	450	8296	1010	0.000194	SLD 4	-0.117	0.017	-0.224	0.036	si
3858	142.5	142.5	450	8296	1010	0.00032	SLD 5	-0.033	-0.123	-0.061	-0.3	si
3858	142.5	142.5	450	8296	1010	0.000283	SLD 6	-0.046	-0.106	-0.09	-0.259	si
3858	142.5	142.5	450	8296	1010	0.000225	SLD 7	-0.021	0.089	-0.037	0.214	si
3858	142.5	142.5	450	8296	1010	0.000273	SLD 8	-0.033	0.106	-0.067	0.255	si
3858	142.5	142.5	450	8296	1010	0.000285	SLD 9	0.035	-0.112	0.069	-0.268	si
3858	142.5	142.5	450	8296	1010	0.000237	SLD 10	0.022	-0.095	0.039	-0.227	si
3858	142.5	142.5	450	8296	1010	0.000271	SLD 11	0.048	0.1	0.092	0.246	si
3858	142.5	142.5	450	8296	1010	0.000308	SLD 12	0.035	0.117	0.063	0.287	si
3858	142.5	142.5	450	8296	1010	0.000197	SLD 13	0.119	-0.024	0.226	-0.049	si
3858	142.5	142.5	450	8296	1010	0.000166	SLD 14	0.107	-0.009	0.2	-0.012	si
3858	142.5	142.5	450	8296	1010	0.000229	SLD 15	0.122	0.04	0.233	0.105	si
3858	142.5	142.5	450	8296	1010	0.000232	SLD 16	0.111	0.055	0.207	0.142	si
3872	680	142.5	450	8310	1010	0.000232	SLD 1	-0.109	-0.029	-0.205	-0.117	si
3872	680	142.5	450	8310	1010	0.000243	SLD 2	-0.121	-0.024	-0.231	-0.104	si
3872	680	142.5	450	8310	1010	0.000165	SLD 3	-0.105	0.036	-0.198	0.038	si
3872	680	142.5	450	8310	1010	0.000192	SLD 4	-0.117	0.041	-0.224	0.052	si
3872	680	142.5	450	8310	1010	0.000309	SLD 5	-0.033	-0.112	-0.061	-0.283	si
3872	680	142.5	450	8310	1010	0.000299	SLD 6	-0.046	-0.106	-0.09	-0.268	si
3872	680	142.5	450	8310	1010	0.000236	SLD 7	-0.021	0.106	-0.037	0.237	si
3872	680	142.5	450	8310	1010	0.000257	SLD 8	-0.033	0.112	-0.067	0.252	si
3872	680	142.5	450	8310	1010	0.000276	SLD 9	0.035	-0.117	0.069	-0.268	si
3872	680	142.5	450	8310	1010	0.000255	SLD 10	0.022	-0.111	0.039	-0.253	si
3872	680	142.5	450	8310	1010	0.000281	SLD 11	0.048	0.101	0.092	0.252	si
3872	680	142.5	450	8310	1010	0.00029	SLD 12	0.035	0.106	0.063	0.266	si

Nodo inferiore				Nodo superiore		Spost. rel.	Comb.	Spostamento inferiore		Spostamento superiore		S.V.
I.	Pos.			I.	Pos.		n.b.	X	Y	X	Y	
	X	Y	Z		Z							
3872	680	142.5	450	8310	1010	0.000196	SLD 13	0.119	-0.046	0.226	-0.068	si
3872	680	142.5	450	8310	1010	0.000167	SLD 14	0.107	-0.041	0.2	-0.055	si
3872	680	142.5	450	8310	1010	0.000233	SLD 15	0.122	0.019	0.233	0.088	si
3872	680	142.5	450	8310	1010	0.00022	SLD 16	0.111	0.024	0.207	0.101	si
3887	1300	142.5	450	8325	1010	0.000187	SLD 1	-0.109	-0.026	-0.205	-0.068	si
3887	1300	142.5	450	8325	1010	0.000217	SLD 2	-0.121	-0.032	-0.231	-0.082	si
3887	1300	142.5	450	8325	1010	0.000186	SLD 3	-0.105	0.042	-0.198	0.09	si
3887	1300	142.5	450	8325	1010	0.000204	SLD 4	-0.117	0.035	-0.224	0.076	si
3887	1300	142.5	450	8325	1010	0.000277	SLD 5	-0.033	-0.109	-0.061	-0.261	si
3887	1300	142.5	450	8325	1010	0.000298	SLD 6	-0.046	-0.116	-0.09	-0.277	si
3887	1300	142.5	450	8325	1010	0.000269	SLD 7	-0.021	0.116	-0.037	0.265	si
3887	1300	142.5	450	8325	1010	0.000259	SLD 8	-0.033	0.109	-0.067	0.25	si
3887	1300	142.5	450	8325	1010	0.000286	SLD 9	0.035	-0.113	0.069	-0.269	si
3887	1300	142.5	450	8325	1010	0.000296	SLD 10	0.022	-0.12	0.039	-0.285	si
3887	1300	142.5	450	8325	1010	0.000272	SLD 11	0.048	0.112	0.092	0.257	si
3887	1300	142.5	450	8325	1010	0.00025	SLD 12	0.035	0.104	0.063	0.242	si
3887	1300	142.5	450	8325	1010	0.000216	SLD 13	0.119	-0.04	0.226	-0.095	si
3887	1300	142.5	450	8325	1010	0.000201	SLD 14	0.107	-0.046	0.2	-0.109	si
3887	1300	142.5	450	8325	1010	0.000207	SLD 15	0.122	0.028	0.233	0.063	si
3887	1300	142.5	450	8325	1010	0.000178	SLD 16	0.111	0.021	0.207	0.049	si
3901	1847.5	142.5	450	8339	1010	0.000175	SLD 1	-0.109	-0.011	-0.205	-0.031	si
3901	1847.5	142.5	450	8339	1010	0.000211	SLD 2	-0.121	-0.027	-0.231	-0.07	si
3901	1847.5	142.5	450	8339	1010	0.000207	SLD 3	-0.105	0.058	-0.198	0.129	si
3901	1847.5	142.5	450	8339	1010	0.00021	SLD 4	-0.117	0.042	-0.224	0.09	si
3901	1847.5	142.5	450	8339	1010	0.000258	SLD 5	-0.033	-0.102	-0.061	-0.244	si
3901	1847.5	142.5	450	8339	1010	0.000307	SLD 6	-0.046	-0.121	-0.09	-0.287	si
3901	1847.5	142.5	450	8339	1010	0.000289	SLD 7	-0.021	0.128	-0.037	0.289	si
3901	1847.5	142.5	450	8339	1010	0.000251	SLD 8	-0.033	0.109	-0.067	0.246	si
3901	1847.5	142.5	450	8339	1010	0.000285	SLD 9	0.035	-0.113	0.069	-0.269	si
3901	1847.5	142.5	450	8339	1010	0.000324	SLD 10	0.022	-0.131	0.039	-0.312	si
3901	1847.5	142.5	450	8339	1010	0.000273	SLD 11	0.048	0.118	0.092	0.264	si
3901	1847.5	142.5	450	8339	1010	0.000224	SLD 12	0.035	0.099	0.063	0.221	si
3901	1847.5	142.5	450	8339	1010	0.000227	SLD 13	0.119	-0.045	0.226	-0.113	si
3901	1847.5	142.5	450	8339	1010	0.000231	SLD 14	0.107	-0.062	0.2	-0.152	si
3901	1847.5	142.5	450	8339	1010	0.000201	SLD 15	0.122	0.024	0.233	0.047	si
3901	1847.5	142.5	450	8339	1010	0.000171	SLD 16	0.111	0.008	0.207	0.008	si
3969	142.5	610	450	8384	1010	0.000258	SLD 1	-0.116	-0.061	-0.225	-0.155	si
3969	142.5	610	450	8384	1010	0.000237	SLD 2	-0.119	-0.046	-0.23	-0.118	si
3969	142.5	610	450	8384	1010	0.00019	SLD 3	-0.113	0.002	-0.219	-0.001	si
3969	142.5	610	450	8384	1010	0.000197	SLD 4	-0.116	0.017	-0.224	0.036	si
3969	142.5	610	450	8384	1010	0.000322	SLD 5	-0.038	-0.123	-0.072	-0.3	si
3969	142.5	610	450	8384	1010	0.00028	SLD 6	-0.041	-0.106	-0.078	-0.259	si
3969	142.5	610	450	8384	1010	0.000227	SLD 7	-0.028	0.089	-0.053	0.214	si
3969	142.5	610	450	8384	1010	0.000272	SLD 8	-0.031	0.106	-0.059	0.255	si
3969	142.5	610	450	8384	1010	0.000285	SLD 9	0.032	-0.112	0.064	-0.268	si
3969	142.5	610	450	8384	1010	0.000241	SLD 10	0.029	-0.095	0.058	-0.227	si
3969	142.5	610	450	8384	1010	0.00027	SLD 11	0.042	0.1	0.083	0.246	si
3969	142.5	610	450	8384	1010	0.000312	SLD 12	0.038	0.117	0.077	0.287	si
3969	142.5	610	450	8384	1010	0.000206	SLD 13	0.117	-0.024	0.229	-0.049	si
3969	142.5	610	450	8384	1010	0.000197	SLD 14	0.114	-0.009	0.224	-0.012	si
3969	142.5	610	450	8384	1010	0.000237	SLD 15	0.119	0.04	0.235	0.105	si
3969	142.5	610	450	8384	1010	0.000255	SLD 16	0.117	0.055	0.23	0.142	si
3983	680	610	450	8398	1010	0.000251	SLD 1	-0.116	-0.029	-0.225	-0.117	si
3983	680	610	450	8398	1010	0.000245	SLD 2	-0.119	-0.024	-0.23	-0.104	si
3983	680	610	450	8398	1010	0.00019	SLD 3	-0.113	0.036	-0.219	0.038	si
3983	680	610	450	8398	1010	0.000195	SLD 4	-0.116	0.041	-0.224	0.052	si
3983	680	610	450	8398	1010	0.000312	SLD 5	-0.038	-0.112	-0.072	-0.283	si
3983	680	610	450	8398	1010	0.000297	SLD 6	-0.041	-0.106	-0.078	-0.268	si
3983	680	610	450	8398	1010	0.000238	SLD 7	-0.028	0.106	-0.053	0.237	si
3983	680	610	450	8398	1010	0.000255	SLD 8	-0.031	0.112	-0.059	0.252	si
3983	680	610	450	8398	1010	0.000275	SLD 9	0.032	-0.117	0.064	-0.268	si
3983	680	610	450	8398	1010	0.000258	SLD 10	0.029	-0.111	0.058	-0.253	si
3983	680	610	450	8398	1010	0.00028	SLD 11	0.042	0.101	0.083	0.252	si
3983	680	610	450	8398	1010	0.000294	SLD 12	0.038	0.106	0.077	0.266	si
3983	680	610	450	8398	1010	0.000205	SLD 13	0.117	-0.046	0.229	-0.068	si
3983	680	610	450	8398	1010	0.000198	SLD 14	0.114	-0.041	0.224	-0.055	si
3983	680	610	450	8398	1010	0.00024	SLD 15	0.119	0.019	0.235	0.088	si
3983	680	610	450	8398	1010	0.000245	SLD 16	0.117	0.024	0.23	0.101	si
3998	1300	610	450	8413	1010	0.00021	SLD 1	-0.116	-0.026	-0.225	-0.068	si
3998	1300	610	450	8413	1010	0.000219	SLD 2	-0.119	-0.032	-0.23	-0.082	si
3998	1300	610	450	8413	1010	0.000208	SLD 3	-0.113	0.042	-0.219	0.09	si
3998	1300	610	450	8413	1010	0.000207	SLD 4	-0.116	0.035	-0.224	0.076	si
3998	1300	610	450	8413	1010	0.00028	SLD 5	-0.038	-0.109	-0.072	-0.261	si
3998	1300	610	450	8413	1010	0.000295	SLD 6	-0.041	-0.116	-0.078	-0.277	si
3998	1300	610	450	8413	1010	0.000271	SLD 7	-0.028	0.116	-0.053	0.265	si
3998	1300	610	450	8413	1010	0.000257	SLD 8	-0.031	0.109	-0.059	0.25	si
3998	1300	610	450	8413	1010	0.000285	SLD 9	0.032	-0.113	0.064	-0.269	si
3998	1300	610	450	8413	1010	0.000299	SLD 10	0.029	-0.12	0.058	-0.285	si
3998	1300	610	450	8413	1010	0.00027	SLD 11	0.042	0.112	0.083	0.257	si
3998	1300	610	450	8413	1010	0.000254	SLD 12	0.038	0.104	0.077	0.242	si
3998	1300	610	450	8413	1010	0.000224	SLD 13	0.117	-0.04	0.229	-0.095	si
3998	1300	610	450	8413	1010	0.000227	SLD 14	0.114	-0.046	0.224	-0.109	si
3998	1300	610	450	8413	1010	0.000215	SLD 15	0.119	0.028	0.235	0.063	si
3998	1300	610	450	8413	1010	0.000208	SLD 16	0.117	0.021	0.23	0.049	si
4012	1847.5	610	450	8427	1010	0.000199	SLD 1	-0.116	-0.011	-0.225	-0.031	si
4012	1847.5	610	450	8427	1010	0.000213	SLD 2	-0.119	-0.027	-0.23	-0.07	si
4012	1847.5	610	450	8427	1010	0.000228	SLD 3	-0.113	0.058	-0.219	0.129	si
4012	1847.5	610	450	8427	1010	0.000213	SLD 4	-0.116	0.042	-0.224	0.09	si
4012	1847.5	610	450	8427	1010	0.000261	SLD 5	-0.038	-0.102	-0.072	-0.244	si
4012	1847.5	610	450	8427	1010	0.000304	SLD 6	-0.041	-0.121	-0.078	-0.287	si
4012	1847.5	610	450	8427	1010	0.00029	SLD 7	-0.028	0.128	-0.053	0.289	si
4012	1847.5	610	450	8427	1010	0.000249	SLD 8	-0.031	0.109	-0.059	0.246	si
4012	1847.5	610	450	8427	1010	0.000285	SLD 9	0.032	-0.113	0.064	-0.269	si
4012	1847.5	610	450	8427	1010	0.000326	SLD 10	0.029	-0.131	0.058	-0.312	si
4012	1847.5	610	450	8427	1010	0.000272	SLD 11	0.042	0.118	0.083	0.264	si
4012	1847.5	610	450	8427	1010	0.000229	SLD 12	0.038	0.099	0.077	0.221	si
4012	1847.5	610	450	8427	1010	0.000235	SLD 13	0.117	-0.045	0.229	-0.113	si
4012	1847.5	610	450	8427	1010	0.000254	SLD 14	0.114	-0.062	0.224	-0.152	si
4012	1847.5	610	450	8427	1010	0.00021	SLD 15	0.119	0.024	0.235	0.047	si

Nodo inferiore				Nodo superiore		Spost. rel.	Comb.	Spostamento inferiore		Spostamento superiore		S.V.
I.	Pos.			I.	Pos.		n.b.	X	Y	X	Y	
	X	Y	Z		Z							
4012	1847.5	610	450	8427	1010	0.000202	SLD 16	0.117	0.008	0.23	0.008	si
4077	142.5	1070	450	8468	1010	0.000273	SLD 1	-0.12	-0.061	-0.241	-0.155	si
4077	142.5	1070	450	8468	1010	0.000237	SLD 2	-0.115	-0.046	-0.226	-0.118	si
4077	142.5	1070	450	8468	1010	0.000221	SLD 3	-0.123	0.002	-0.247	-0.001	si
4077	142.5	1070	450	8468	1010	0.000207	SLD 4	-0.118	0.017	-0.232	0.036	si
4077	142.5	1070	450	8468	1010	0.000321	SLD 5	-0.034	-0.123	-0.066	-0.3	si
4077	142.5	1070	450	8468	1010	0.000275	SLD 6	-0.028	-0.106	-0.05	-0.259	si
4077	142.5	1070	450	8468	1010	0.000236	SLD 7	-0.044	0.089	-0.087	0.214	si
4077	142.5	1070	450	8468	1010	0.000273	SLD 8	-0.037	0.106	-0.07	0.255	si
4077	142.5	1070	450	8468	1010	0.000288	SLD 9	0.038	-0.112	0.078	-0.268	si
4077	142.5	1070	450	8468	1010	0.000252	SLD 10	0.044	-0.095	0.094	-0.227	si
4077	142.5	1070	450	8468	1010	0.000265	SLD 11	0.028	0.1	0.057	0.246	si
4077	142.5	1070	450	8468	1010	0.000312	SLD 12	0.034	0.117	0.074	0.287	si
4077	142.5	1070	450	8468	1010	0.000222	SLD 13	0.118	-0.024	0.24	-0.049	si
4077	142.5	1070	450	8468	1010	0.000234	SLD 14	0.123	-0.009	0.254	-0.012	si
4077	142.5	1070	450	8468	1010	0.000242	SLD 15	0.115	0.04	0.233	0.105	si
4077	142.5	1070	450	8468	1010	0.000277	SLD 16	0.12	0.055	0.248	0.142	si
4091	680	1070	450	8482	1010	0.000267	SLD 1	-0.12	-0.029	-0.241	-0.117	si
4091	680	1070	450	8482	1010	0.000245	SLD 2	-0.115	-0.024	-0.226	-0.104	si
4091	680	1070	450	8482	1010	0.000221	SLD 3	-0.123	0.036	-0.247	0.038	si
4091	680	1070	450	8482	1010	0.000206	SLD 4	-0.118	0.041	-0.232	0.052	si
4091	680	1070	450	8482	1010	0.000311	SLD 5	-0.034	-0.112	-0.066	-0.283	si
4091	680	1070	450	8482	1010	0.000292	SLD 6	-0.028	-0.106	-0.05	-0.268	si
4091	680	1070	450	8482	1010	0.000246	SLD 7	-0.044	0.106	-0.087	0.237	si
4091	680	1070	450	8482	1010	0.000257	SLD 8	-0.037	0.112	-0.07	0.252	si
4091	680	1070	450	8482	1010	0.000279	SLD 9	0.038	-0.117	0.078	-0.268	si
4091	680	1070	450	8482	1010	0.000269	SLD 10	0.044	-0.111	0.094	-0.253	si
4091	680	1070	450	8482	1010	0.000275	SLD 11	0.028	0.101	0.057	0.252	si
4091	680	1070	450	8482	1010	0.000295	SLD 12	0.034	0.106	0.074	0.266	si
4091	680	1070	450	8482	1010	0.000221	SLD 13	0.118	-0.046	0.24	-0.068	si
4091	680	1070	450	8482	1010	0.000236	SLD 14	0.123	-0.041	0.254	-0.055	si
4091	680	1070	450	8482	1010	0.000245	SLD 15	0.115	0.019	0.233	0.088	si
4091	680	1070	450	8482	1010	0.000267	SLD 16	0.12	0.024	0.248	0.101	si
4092	1300	1070	450	8483	1010	0.000229	SLD 1	-0.12	-0.026	-0.241	-0.068	si
4092	1300	1070	450	8483	1010	0.000218	SLD 2	-0.115	-0.032	-0.226	-0.082	si
4092	1300	1070	450	8483	1010	0.000237	SLD 3	-0.123	0.042	-0.247	0.09	si
4092	1300	1070	450	8483	1010	0.000217	SLD 4	-0.118	0.035	-0.232	0.076	si
4092	1300	1070	450	8483	1010	0.000279	SLD 5	-0.034	-0.109	-0.066	-0.261	si
4092	1300	1070	450	8483	1010	0.00029	SLD 6	-0.028	-0.116	-0.05	-0.277	si
4092	1300	1070	450	8483	1010	0.000278	SLD 7	-0.044	0.116	-0.087	0.265	si
4092	1300	1070	450	8483	1010	0.000259	SLD 8	-0.037	0.109	-0.07	0.25	si
4092	1300	1070	450	8483	1010	0.000289	SLD 9	0.038	-0.113	0.078	-0.269	si
4092	1300	1070	450	8483	1010	0.000308	SLD 10	0.044	-0.12	0.094	-0.285	si
4092	1300	1070	450	8483	1010	0.000265	SLD 11	0.028	0.112	0.057	0.257	si
4092	1300	1070	450	8483	1010	0.000255	SLD 12	0.034	0.104	0.074	0.242	si
4092	1300	1070	450	8483	1010	0.000239	SLD 13	0.118	-0.04	0.24	-0.095	si
4092	1300	1070	450	8483	1010	0.00026	SLD 14	0.123	-0.046	0.254	-0.109	si
4092	1300	1070	450	8483	1010	0.000221	SLD 15	0.115	0.028	0.233	0.063	si
4092	1300	1070	450	8483	1010	0.000234	SLD 16	0.12	0.021	0.248	0.049	si
4106	1847.5	1070	450	8497	1010	0.000219	SLD 1	-0.12	-0.011	-0.241	-0.031	si
4106	1847.5	1070	450	8497	1010	0.000213	SLD 2	-0.115	-0.027	-0.226	-0.07	si
4106	1847.5	1070	450	8497	1010	0.000254	SLD 3	-0.123	0.058	-0.247	0.129	si
4106	1847.5	1070	450	8497	1010	0.000222	SLD 4	-0.118	0.042	-0.232	0.09	si
4106	1847.5	1070	450	8497	1010	0.00026	SLD 5	-0.034	-0.102	-0.066	-0.244	si
4106	1847.5	1070	450	8497	1010	0.000299	SLD 6	-0.028	-0.121	-0.05	-0.287	si
4106	1847.5	1070	450	8497	1010	0.000297	SLD 7	-0.044	0.128	-0.087	0.289	si
4106	1847.5	1070	450	8497	1010	0.000251	SLD 8	-0.037	0.109	-0.07	0.246	si
4106	1847.5	1070	450	8497	1010	0.000288	SLD 9	0.038	-0.113	0.078	-0.269	si
4106	1847.5	1070	450	8497	1010	0.000335	SLD 10	0.044	-0.131	0.094	-0.312	si
4106	1847.5	1070	450	8497	1010	0.000267	SLD 11	0.028	0.118	0.057	0.264	si
4106	1847.5	1070	450	8497	1010	0.000229	SLD 12	0.034	0.099	0.074	0.221	si
4106	1847.5	1070	450	8497	1010	0.00025	SLD 13	0.118	-0.045	0.24	-0.113	si
4106	1847.5	1070	450	8497	1010	0.000284	SLD 14	0.123	-0.062	0.254	-0.152	si
4106	1847.5	1070	450	8497	1010	0.000216	SLD 15	0.115	0.024	0.233	0.047	si
4106	1847.5	1070	450	8497	1010	0.000229	SLD 16	0.12	0.008	0.248	0.008	si
4168	142.5	1522.5	450	8538	1010	0.000295	SLD 1	-0.128	-0.061	-0.264	-0.155	si
4168	142.5	1522.5	450	8538	1010	0.000242	SLD 2	-0.114	-0.046	-0.229	-0.118	si
4168	142.5	1522.5	450	8538	1010	0.00025	SLD 3	-0.132	0.002	-0.272	-0.001	si
4168	142.5	1522.5	450	8538	1010	0.000215	SLD 4	-0.118	0.017	-0.237	0.036	si
4168	142.5	1522.5	450	8538	1010	0.000324	SLD 5	-0.038	-0.123	-0.078	-0.3	si
4168	142.5	1522.5	450	8538	1010	0.000273	SLD 6	-0.023	-0.106	-0.039	-0.259	si
4168	142.5	1522.5	450	8538	1010	0.000242	SLD 7	-0.051	0.089	-0.104	0.214	si
4168	142.5	1522.5	450	8538	1010	0.000272	SLD 8	-0.036	0.106	-0.065	0.255	si
4168	142.5	1522.5	450	8538	1010	0.000288	SLD 9	0.035	-0.112	0.075	-0.268	si
4168	142.5	1522.5	450	8538	1010	0.000261	SLD 10	0.051	-0.095	0.114	-0.227	si
4168	142.5	1522.5	450	8538	1010	0.000264	SLD 11	0.022	0.1	0.049	0.246	si
4168	142.5	1522.5	450	8538	1010	0.000317	SLD 12	0.038	0.117	0.088	0.287	si
4168	142.5	1522.5	450	8538	1010	0.000236	SLD 13	0.117	-0.024	0.247	-0.049	si
4168	142.5	1522.5	450	8538	1010	0.000269	SLD 14	0.131	-0.009	0.282	-0.012	si
4168	142.5	1522.5	450	8538	1010	0.000253	SLD 15	0.113	0.04	0.239	0.105	si
4168	142.5	1522.5	450	8538	1010	0.000305	SLD 16	0.127	0.055	0.274	0.142	si
4182	680	1522.5	450	8552	1010	0.00029	SLD 1	-0.128	-0.029	-0.264	-0.117	si
4182	680	1522.5	450	8552	1010	0.00025	SLD 2	-0.114	-0.024	-0.229	-0.104	si
4182	680	1522.5	450	8552	1010	0.00025	SLD 3	-0.132	0.036	-0.272	0.038	si
4182	680	1522.5	450	8552	1010	0.000213	SLD 4	-0.118	0.041	-0.237	0.052	si
4182	680	1522.5	450	8552	1010	0.000313	SLD 5	-0.038	-0.112	-0.078	-0.283	si
4182	680	1522.5	450	8552	1010	0.00029	SLD 6	-0.023	-0.106	-0.039	-0.268	si
4182	680	1522.5	450	8552	1010	0.000252	SLD 7	-0.051	0.106	-0.104	0.237	si
4182	680	1522.5	450	8552	1010	0.000255	SLD 8	-0.036	0.112	-0.065	0.252	si
4182	680	1522.5	450	8552	1010	0.000279	SLD 9	0.035	-0.117	0.075	-0.268	si
4182	680	1522.5	450	8552	1010	0.000277	SLD 10	0.051	-0.111	0.114	-0.253	si
4182	680	1522.5	450	8552	1010	0.000274	SLD 11	0.022	0.101	0.049	0.252	si
4182	680	1522.5	450	8552	1010	0.0003	SLD 12	0.038	0.106	0.088	0.266	si
4182	680	1522.5	450	8552	1010	0.000235	SLD 13	0.117	-0.046	0.247	-0.068	si
4182	680	1522.5	450	8552	1010	0.00027	SLD 14	0.131	-0.041	0.282	-0.055	si
4182	680	1522.5	450	8552	1010	0.000256	SLD 15	0.113	0.019	0.239	0.088	si
4182	680	1522.5	450	8552	1010	0.000296	SLD 16	0.127	0.024	0.274	0.101	si
4197	1300	1522.5	450	8567	1010	0.000255	SLD 1	-0.128	-0.026	-0.264	-0.068	si
4197	1300	1522.5	450	8567	1010	0.000224	SLD 2	-0.114	-0.032	-0.229	-0.082	si
4197	1300	1522.5	450	8567	1010	0.000264	SLD 3	-0.132	0.042	-0.272	0.09	si
4197	1300	1522.5	450	8567	1010	0.000224	SLD 4	-0.118	0.035	-0.237	0.076	si
4197	1300	1522.5	450	8567	1010	0.000282	SLD 5	-0.038	-0.109	-0.078	-0.261	si

Nodo inferiore				Nodo superiore		Spost. rel.	Comb.	Spostamento inferiore		Spostamento superiore		S.V.
I.	Pos.			I.	Pos.		n.b.	X	Y	X	Y	
	X	Y	Z		Z							
4197	1300	1522.5	450	8567	1010	0.000289	SLD 6	-0.023	-0.116	-0.039	-0.277	si
4197	1300	1522.5	450	8567	1010	0.000283	SLD 7	-0.051	0.116	-0.104	0.265	si
4197	1300	1522.5	450	8567	1010	0.000257	SLD 8	-0.036	0.109	-0.065	0.25	si
4197	1300	1522.5	450	8567	1010	0.000289	SLD 9	0.035	-0.113	0.075	-0.269	si
4197	1300	1522.5	450	8567	1010	0.000316	SLD 10	0.051	-0.12	0.114	-0.285	si
4197	1300	1522.5	450	8567	1010	0.000264	SLD 11	0.022	0.112	0.049	0.257	si
4197	1300	1522.5	450	8567	1010	0.000261	SLD 12	0.038	0.104	0.088	0.242	si
4197	1300	1522.5	450	8567	1010	0.000252	SLD 13	0.117	-0.04	0.247	-0.095	si
4197	1300	1522.5	450	8567	1010	0.000292	SLD 14	0.131	-0.046	0.282	-0.109	si
4197	1300	1522.5	450	8567	1010	0.000233	SLD 15	0.113	0.028	0.239	0.063	si
4197	1300	1522.5	450	8567	1010	0.000267	SLD 16	0.127	0.021	0.274	0.049	si
4211	1847.5	1522.5	450	8581	1010	0.000246	SLD 1	-0.128	-0.011	-0.264	-0.031	si
4211	1847.5	1522.5	450	8581	1010	0.000219	SLD 2	-0.114	-0.027	-0.229	-0.07	si
4211	1847.5	1522.5	450	8581	1010	0.00028	SLD 3	-0.132	0.058	-0.272	0.129	si
4211	1847.5	1522.5	450	8581	1010	0.000229	SLD 4	-0.118	0.042	-0.237	0.09	si
4211	1847.5	1522.5	450	8581	1010	0.000263	SLD 5	-0.038	-0.102	-0.078	-0.244	si
4211	1847.5	1522.5	450	8581	1010	0.000298	SLD 6	-0.023	-0.121	-0.039	-0.287	si
4211	1847.5	1522.5	450	8581	1010	0.000302	SLD 7	-0.051	0.128	-0.104	0.289	si
4211	1847.5	1522.5	450	8581	1010	0.000249	SLD 8	-0.036	0.109	-0.065	0.246	si
4211	1847.5	1522.5	450	8581	1010	0.000288	SLD 9	0.035	-0.113	0.075	-0.269	si
4211	1847.5	1522.5	450	8581	1010	0.000342	SLD 10	0.051	-0.131	0.114	-0.312	si
4211	1847.5	1522.5	450	8581	1010	0.000266	SLD 11	0.022	0.118	0.049	0.264	si
4211	1847.5	1522.5	450	8581	1010	0.000236	SLD 12	0.038	0.099	0.088	0.221	si
4211	1847.5	1522.5	450	8581	1010	0.000262	SLD 13	0.117	-0.045	0.247	-0.113	si
4211	1847.5	1522.5	450	8581	1010	0.000313	SLD 14	0.131	-0.062	0.282	-0.152	si
4211	1847.5	1522.5	450	8581	1010	0.000228	SLD 15	0.113	0.024	0.239	0.047	si
4211	1847.5	1522.5	450	8581	1010	0.000262	SLD 16	0.127	0.008	0.274	0.008	si

2.4 Tagli ai livelli

***Livello**: Livello rispetto a cui è calcolato il taglio.*
***Nome**: Nome completo del livello.*
***Cont.**: Contesto nel quale viene valutato il taglio.*
***n.br.**: Nome breve della condizione o combinazione di carico.*
***Totale**: Totale del taglio al livello.*
***F**: Forza del taglio. [daN]*
***X**: Componente lungo l'asse X globale. [daN]*
***Y**: Componente lungo l'asse Y globale. [daN]*
***Z**: Componente lungo l'asse Z globale. [daN]*
***Aste verticali**: Contributo al taglio totale dato dalle aste verticali.*
***F**: Forza del taglio. [daN]*
***X**: Componente lungo l'asse X globale. [daN]*
***Y**: Componente lungo l'asse Y globale. [daN]*
***Z**: Componente lungo l'asse Z globale. [daN]*
***Pareti**: Contributo al taglio totale dato dalle pareti e piastre generiche verticali.*
***F**: Forza del taglio. [daN]*
***X**: Componente lungo l'asse X globale. [daN]*
***Y**: Componente lungo l'asse Y globale. [daN]*
***Z**: Componente lungo l'asse Z globale. [daN]*

Livello	Cont.	Totale			Aste verticali			Pareti		
Nome	n.br.	F			F			F		
		X	Y	Z	X	Y	Z	X	Y	Z
Fondazione	Pesi	0	0	-2203512	0	0	0	0	0	-2203512
Fondazione	Port.	0	0	-98533	0	0	0	0	0	-98533
Fondazione	Variabile A	0	0	-128016	0	0	0	0	0	-128016
Fondazione	neve	0	0	-25134	0	0	0	0	0	-25134
Fondazione	X SLV	243010	-3644	-3819	0	0	0	243010	-3644	-3819
Fondazione	Y SLV	1667	232337	3040	0	0	0	1667	232337	3040
Fondazione	EY SLV	0	0	0	0	0	0	0	0	0
Fondazione	EX SLV	0	0	0	0	0	0	0	0	0
Fondazione	X SLD	233453	-3587	-4001	0	0	0	233453	-3587	-4001
Fondazione	Y SLD	1482	218553	2161	0	0	0	1482	218553	2161
Fondazione	EY SLD	0	0	0	0	0	0	0	0	0
Fondazione	EX SLD	0	0	0	0	0	0	0	0	0
Fondazione	SLU 1	0	0	-2203512	0	0	0	0	0	-2203512
Fondazione	SLU 2	0	0	-2241213	0	0	0	0	0	-2241213
Fondazione	SLU 3	0	0	-2375630	0	0	0	0	0	-2375630
Fondazione	SLU 4	0	0	-2395536	0	0	0	0	0	-2395536
Fondazione	SLU 5	0	0	-2414387	0	0	0	0	0	-2414387
Fondazione	SLU 6	0	0	-2351312	0	0	0	0	0	-2351312
Fondazione	SLU 7	0	0	-2389013	0	0	0	0	0	-2389013
Fondazione	SLU 8	0	0	-2523430	0	0	0	0	0	-2523430
Fondazione	SLU 9	0	0	-2543336	0	0	0	0	0	-2543336
Fondazione	SLU 10	0	0	-2562187	0	0	0	0	0	-2562187
Fondazione	SLU 11	0	0	-2864566	0	0	0	0	0	-2864566
Fondazione	SLU 12	0	0	-2902267	0	0	0	0	0	-2902267
Fondazione	SLU 13	0	0	-3036684	0	0	0	0	0	-3036684
Fondazione	SLU 14	0	0	-3056590	0	0	0	0	0	-3056590
Fondazione	SLU 15	0	0	-3075441	0	0	0	0	0	-3075441
Fondazione	SLU 16	0	0	-3012365	0	0	0	0	0	-3012365
Fondazione	SLU 17	0	0	-3050067	0	0	0	0	0	-3050067
Fondazione	SLU 18	0	0	-3184484	0	0	0	0	0	-3184484
Fondazione	SLU 19	0	0	-3204390	0	0	0	0	0	-3204390
Fondazione	SLU 20	0	0	-3223240	0	0	0	0	0	-3223240
Fondazione	SLE RA 1	0	0	-2302045	0	0	0	0	0	-2302045
Fondazione	SLE RA 2	0	0	-2327179	0	0	0	0	0	-2327179
Fondazione	SLE RA 3	0	0	-2416791	0	0	0	0	0	-2416791
Fondazione	SLE RA 4	0	0	-2430061	0	0	0	0	0	-2430061
Fondazione	SLE RA 5	0	0	-2442629	0	0	0	0	0	-2442629

Livello	Cont.	Totale			Aste verticali			Pareti		
Nome	n.br.	F			F			F		
		X	Y	Z	X	Y	Z	X	Y	Z
Fondazione	SLE FR 1	0	0	-2302045	0	0	0	0	0	-2302045
Fondazione	SLE FR 2	0	0	-2307072	0	0	0	0	0	-2307072
Fondazione	SLE FR 3	0	0	-2345477	0	0	0	0	0	-2345477
Fondazione	SLE FR 4	0	0	-2366053	0	0	0	0	0	-2366053
Fondazione	SLE QP 1	0	0	-2302045	0	0	0	0	0	-2302045
Fondazione	SLE QP 2	0	0	-2340450	0	0	0	0	0	-2340450
Fondazione	SLD 1	-233898	-61979	-2337097	0	0	0	-233898	-61979	-2337097
Fondazione	SLD 2	-233898	-61979	-2337097	0	0	0	-233898	-61979	-2337097
Fondazione	SLD 3	-233008	69153	-2335801	0	0	0	-233008	69153	-2335801
Fondazione	SLD 4	-233008	69153	-2335801	0	0	0	-233008	69153	-2335801
Fondazione	SLD 5	-71518	-217477	-2341411	0	0	0	-71518	-217477	-2341411
Fondazione	SLD 6	-71518	-217477	-2341411	0	0	0	-71518	-217477	-2341411
Fondazione	SLD 7	-68553	219629	-2337089	0	0	0	-68553	219629	-2337089
Fondazione	SLD 8	-68553	219629	-2337089	0	0	0	-68553	219629	-2337089
Fondazione	SLD 9	68553	-219629	-2343811	0	0	0	68553	-219629	-2343811
Fondazione	SLD 10	68553	-219629	-2343811	0	0	0	68553	-219629	-2343811
Fondazione	SLD 11	71518	217477	-2339489	0	0	0	71518	217477	-2339489
Fondazione	SLD 12	71518	217477	-2339489	0	0	0	71518	217477	-2339489
Fondazione	SLD 13	233008	-69153	-2345099	0	0	0	233008	-69153	-2345099
Fondazione	SLD 14	233008	-69153	-2345099	0	0	0	233008	-69153	-2345099
Fondazione	SLD 15	233898	61979	-2343803	0	0	0	233898	61979	-2343803
Fondazione	SLD 16	233898	61979	-2343803	0	0	0	233898	61979	-2343803
Fondazione	SLV 1	-243510	-66057	-2337543	0	0	0	-243510	-66057	-2337543
Fondazione	SLV 2	-243510	-66057	-2337543	0	0	0	-243510	-66057	-2337543
Fondazione	SLV 3	-242510	73345	-2335719	0	0	0	-242510	73345	-2335719
Fondazione	SLV 4	-242510	73345	-2335719	0	0	0	-242510	73345	-2335719
Fondazione	SLV 5	-74570	-231244	-2342344	0	0	0	-74570	-231244	-2342344
Fondazione	SLV 6	-74570	-231244	-2342344	0	0	0	-74570	-231244	-2342344
Fondazione	SLV 7	-71236	233430	-2336265	0	0	0	-71236	233430	-2336265
Fondazione	SLV 8	-71236	233430	-2336265	0	0	0	-71236	233430	-2336265
Fondazione	SLV 9	71236	-233430	-2344636	0	0	0	71236	-233430	-2344636
Fondazione	SLV 10	71236	-233430	-2344636	0	0	0	71236	-233430	-2344636
Fondazione	SLV 11	74570	231244	-2338556	0	0	0	74570	231244	-2338556
Fondazione	SLV 12	74570	231244	-2338556	0	0	0	74570	231244	-2338556
Fondazione	SLV 13	242510	-73345	-2345181	0	0	0	242510	-73345	-2345181
Fondazione	SLV 14	242510	-73345	-2345181	0	0	0	242510	-73345	-2345181
Fondazione	SLV 15	243510	66057	-2343357	0	0	0	243510	66057	-2343357
Fondazione	SLV 16	243510	66057	-2343357	0	0	0	243510	66057	-2343357
Fondazione	SLV FO 1	-267861	-72662	-2337252	0	0	0	-267861	-72662	-2337252
Fondazione	SLV FO 2	-267861	-72662	-2337252	0	0	0	-267861	-72662	-2337252
Fondazione	SLV FO 3	-266761	80680	-2335246	0	0	0	-266761	80680	-2335246
Fondazione	SLV FO 4	-266761	80680	-2335246	0	0	0	-266761	80680	-2335246
Fondazione	SLV FO 5	-82027	-254368	-2342533	0	0	0	-82027	-254368	-2342533
Fondazione	SLV FO 6	-82027	-254368	-2342533	0	0	0	-82027	-254368	-2342533
Fondazione	SLV FO 7	-78360	256773	-2335846	0	0	0	-78360	256773	-2335846
Fondazione	SLV FO 8	-78360	256773	-2335846	0	0	0	-78360	256773	-2335846
Fondazione	SLV FO 9	78360	-256773	-2345054	0	0	0	78360	-256773	-2345054
Fondazione	SLV FO 10	78360	-256773	-2345054	0	0	0	78360	-256773	-2345054
Fondazione	SLV FO 11	82027	254368	-2338367	0	0	0	82027	254368	-2338367
Fondazione	SLV FO 12	82027	254368	-2338367	0	0	0	82027	254368	-2338367
Fondazione	SLV FO 13	266761	-80680	-2345654	0	0	0	266761	-80680	-2345654
Fondazione	SLV FO 14	266761	-80680	-2345654	0	0	0	266761	-80680	-2345654
Fondazione	SLV FO 15	267861	72662	-2343648	0	0	0	267861	72662	-2343648
Fondazione	SLV FO 16	267861	72662	-2343648	0	0	0	267861	72662	-2343648
Fondazione	CRTFP Ux+	0	0	0	0	0	0	0	0	0
Fondazione	CRTFP Ux-	0	0	0	0	0	0	0	0	0
Fondazione	CRTFP Uy+	0	0	0	0	0	0	0	0	0
Fondazione	CRTFP Uy-	0	0	0	0	0	0	0	0	0
Fondazione	CRTFP Rz+	0	0	0	0	0	0	0	0	0
Fondazione	CRTFP Rz-	0	0	0	0	0	0	0	0	0
Piano 1	Pesi	0	0	-1075688	0	0	0	0	0	-1075688
Piano 1	Port.	0	0	-47941	0	0	0	0	0	-47941
Piano 1	Variabile A	0	0	-50268	0	0	0	0	0	-50268
Piano 1	neve	0	0	-25134	0	0	0	0	0	-25134
Piano 1	X SLV	159349	1653	-645	0	0	0	159349	1653	-645
Piano 1	Y SLV	6048	162005	-17397	0	0	0	6048	162005	-17397
Piano 1	EY SLV	0	0	0	0	0	0	0	0	0
Piano 1	EX SLV	0	0	0	0	0	0	0	0	0
Piano 1	X SLD	155021	1646	-873	0	0	0	155021	1646	-873
Piano 1	Y SLD	5939	157511	-17215	0	0	0	5939	157511	-17215
Piano 1	EY SLD	0	0	0	0	0	0	0	0	0
Piano 1	EX SLD	0	0	0	0	0	0	0	0	0
Piano 1	SLU 1	0	0	-1075688	0	0	0	0	0	-1075688
Piano 1	SLU 2	0	0	-1113390	0	0	0	0	0	-1113390
Piano 1	SLU 3	0	0	-1166171	0	0	0	0	0	-1166171
Piano 1	SLU 4	0	0	-1151091	0	0	0	0	0	-1151091
Piano 1	SLU 5	0	0	-1169941	0	0	0	0	0	-1169941
Piano 1	SLU 6	0	0	-1147600	0	0	0	0	0	-1147600
Piano 1	SLU 7	0	0	-1185301	0	0	0	0	0	-1185301
Piano 1	SLU 8	0	0	-1238083	0	0	0	0	0	-1238083
Piano 1	SLU 9	0	0	-1223003	0	0	0	0	0	-1223003
Piano 1	SLU 10	0	0	-1241853	0	0	0	0	0	-1241853
Piano 1	SLU 11	0	0	-1398395	0	0	0	0	0	-1398395
Piano 1	SLU 12	0	0	-1436096	0	0	0	0	0	-1436096
Piano 1	SLU 13	0	0	-1488878	0	0	0	0	0	-1488878
Piano 1	SLU 14	0	0	-1473797	0	0	0	0	0	-1473797
Piano 1	SLU 15	0	0	-1492648	0	0	0	0	0	-1492648
Piano 1	SLU 16	0	0	-1470307	0	0	0	0	0	-1470307
Piano 1	SLU 17	0	0	-1508008	0	0	0	0	0	-1508008
Piano 1	SLU 18	0	0	-1560790	0	0	0	0	0	-1560790
Piano 1	SLU 19	0	0	-1545709	0	0	0	0	0	-1545709
Piano 1	SLU 20	0	0	-1564560	0	0	0	0	0	-1564560
Piano 1	SLE RA 1	0	0	-1123630	0	0	0	0	0	-1123630
Piano 1	SLE RA 2	0	0	-1148764	0	0	0	0	0	-1148764
Piano 1	SLE RA 3	0	0	-1183952	0	0	0	0	0	-1183952
Piano 1	SLE RA 4	0	0	-1173898	0	0	0	0	0	-1173898
Piano 1	SLE RA 5	0	0	-1186465	0	0	0	0	0	-1186465
Piano 1	SLE FR 1	0	0	-1123630	0	0	0	0	0	-1123630
Piano 1	SLE FR 2	0	0	-1128656	0	0	0	0	0	-1128656
Piano 1	SLE FR 3	0	0	-1143737	0	0	0	0	0	-1143737
Piano 1	SLE FR 4	0	0	-1148764	0	0	0	0	0	-1148764
Piano 1	SLE QP 1	0	0	-1123630	0	0	0	0	0	-1123630

Livello	Cont.	Totale			Aste verticali			Pareti		
Nome	n.br.	F			F			F		
		X	Y	Z	X	Y	Z	X	Y	Z
Piano 1	SLE QP 2	0	0	-1138710	0	0	0	0	0	-1138710
Piano 1	SLD 1	-156803	-48899	-1132673	0	0	0	-156803	-48899	-1132673
Piano 1	SLD 2	-156803	-48899	-1132673	0	0	0	-156803	-48899	-1132673
Piano 1	SLD 3	-153239	45608	-1143002	0	0	0	-153239	45608	-1143002
Piano 1	SLD 4	-153239	45608	-1143002	0	0	0	-153239	45608	-1143002
Piano 1	SLD 5	-52445	-158005	-1121234	0	0	0	-52445	-158005	-1121234
Piano 1	SLD 6	-52445	-158005	-1121234	0	0	0	-52445	-158005	-1121234
Piano 1	SLD 7	-40567	157017	-1155663	0	0	0	-40567	157017	-1155663
Piano 1	SLD 8	-40567	157017	-1155663	0	0	0	-40567	157017	-1155663
Piano 1	SLD 9	40567	-157017	-1121757	0	0	0	40567	-157017	-1121757
Piano 1	SLD 10	40567	-157017	-1121757	0	0	0	40567	-157017	-1121757
Piano 1	SLD 11	52445	158005	-1156187	0	0	0	52445	158005	-1156187
Piano 1	SLD 12	52445	158005	-1156187	0	0	0	52445	158005	-1156187
Piano 1	SLD 13	153239	-45608	-1134418	0	0	0	153239	-45608	-1134418
Piano 1	SLD 14	153239	-45608	-1134418	0	0	0	153239	-45608	-1134418
Piano 1	SLD 15	156803	48899	-1144747	0	0	0	156803	48899	-1144747
Piano 1	SLD 16	156803	48899	-1144747	0	0	0	156803	48899	-1144747
Piano 1	SLV 1	-161163	-50254	-1132846	0	0	0	-161163	-50254	-1132846
Piano 1	SLV 2	-161163	-50254	-1132846	0	0	0	-161163	-50254	-1132846
Piano 1	SLV 3	-157535	46949	-1143284	0	0	0	-157535	46949	-1143284
Piano 1	SLV 4	-157535	46949	-1143284	0	0	0	-157535	46949	-1143284
Piano 1	SLV 5	-53852	-162501	-1121119	0	0	0	-53852	-162501	-1121119
Piano 1	SLV 6	-53852	-162501	-1121119	0	0	0	-53852	-162501	-1121119
Piano 1	SLV 7	-41757	161509	-1155913	0	0	0	-41757	161509	-1155913
Piano 1	SLV 8	-41757	161509	-1155913	0	0	0	-41757	161509	-1155913
Piano 1	SLV 9	41757	-161509	-1121507	0	0	0	41757	-161509	-1121507
Piano 1	SLV 10	41757	-161509	-1121507	0	0	0	41757	-161509	-1121507
Piano 1	SLV 11	53852	162501	-1156301	0	0	0	53852	162501	-1156301
Piano 1	SLV 12	53852	162501	-1156301	0	0	0	53852	162501	-1156301
Piano 1	SLV 13	157535	-46949	-1134136	0	0	0	157535	-46949	-1134136
Piano 1	SLV 14	157535	-46949	-1134136	0	0	0	157535	-46949	-1134136
Piano 1	SLV 15	161163	50254	-1144575	0	0	0	161163	50254	-1144575
Piano 1	SLV 16	161163	50254	-1144575	0	0	0	161163	50254	-1144575
Piano 1	SLV FO 1	-177280	-55279	-1132259	0	0	0	-177280	-55279	-1132259
Piano 1	SLV FO 2	-177280	-55279	-1132259	0	0	0	-177280	-55279	-1132259
Piano 1	SLV FO 3	-173288	51644	-1143741	0	0	0	-173288	51644	-1143741
Piano 1	SLV FO 4	-173288	51644	-1143741	0	0	0	-173288	51644	-1143741
Piano 1	SLV FO 5	-59238	-178751	-1119360	0	0	0	-59238	-178751	-1119360
Piano 1	SLV FO 6	-59238	-178751	-1119360	0	0	0	-59238	-178751	-1119360
Piano 1	SLV FO 7	-45933	177660	-1157634	0	0	0	-45933	177660	-1157634
Piano 1	SLV FO 8	-45933	177660	-1157634	0	0	0	-45933	177660	-1157634
Piano 1	SLV FO 9	45933	-177660	-1119786	0	0	0	45933	-177660	-1119786
Piano 1	SLV FO 10	45933	-177660	-1119786	0	0	0	45933	-177660	-1119786
Piano 1	SLV FO 11	59238	178751	-1158060	0	0	0	59238	178751	-1158060
Piano 1	SLV FO 12	59238	178751	-1158060	0	0	0	59238	178751	-1158060
Piano 1	SLV FO 13	173288	-51644	-1133679	0	0	0	173288	-51644	-1133679
Piano 1	SLV FO 14	173288	-51644	-1133679	0	0	0	173288	-51644	-1133679
Piano 1	SLV FO 15	177280	55279	-1145161	0	0	0	177280	55279	-1145161
Piano 1	SLV FO 16	177280	55279	-1145161	0	0	0	177280	55279	-1145161
Piano 1	CRTFP Ux+	0	0	0	0	0	0	0	0	0
Piano 1	CRTFP Ux-	0	0	0	0	0	0	0	0	0
Piano 1	CRTFP Uy+	0	0	0	0	0	0	0	0	0
Piano 1	CRTFP Uy-	0	0	0	0	0	0	0	0	0
Piano 1	CRTFP Rz+	0	0	0	0	0	0	0	0	0
Piano 1	CRTFP Rz-	0	0	0	0	0	0	0	0	0

2.5 Baricentri delle rigidezze

***Quota**: Quota alla quale è stato valutato il baricentro delle rigidezze. esprimibile come livello, falda, piano orizzontale alla Z specificata. [cm]*
***Posizione**: Posizione in pianta del baricentro delle rigidezze.*
- ***X**: Coordinata X. [cm]*
- ***Y**: Coordinata Y. [cm]*

***Baricentro masse**: Posizione in pianta del baricentro delle masse.*
- ***X**: Coordinata X. [cm]*
- ***Y**: Coordinata Y. [cm]*

***Distanza**: Distanza in pianta tra il baricentro delle rigidezze e il baricentro delle masse.*
- ***X**: Coordinata X. [cm]*
- ***Y**: Coordinata Y. [cm]*

Quota	Posizione		Baricentro masse		Distanza	
	X	Y	X	Y	X	Y
L2	971.3	803.8	994.9	838.9	-23.6	-35.1
L3	986.8	722.7	1011.9	831.5	-25.1	-108.7

2.6 Risposta modale

***Modo**: Identificativo del modo di vibrare.*
***Periodo**: Periodo. [s]*
***Massa X**: Massa partecipante in direzione globale X. Il valore è adimensionale.*
***Massa Y**: Massa partecipante in direzione globale Y. Il valore è adimensionale.*
***Massa Z**: Massa partecipante in direzione globale Z. Il valore è adimensionale.*
***Massa rot X**: Massa rotazionale partecipante attorno la direzione globale X. Il valore è adimensionale.*
***Massa rot Y**: Massa rotazionale partecipante attorno la direzione globale Y. Il valore è adimensionale.*
***Massa rot Z**: Massa rotazionale partecipante attorno la direzione globale Z. Il valore è adimensionale.*

Totale masse partecipanti:
Traslazione X: 0.953328

Traslazione Y: 0.930659
Traslazione Z: 0
Rotazione X: 0.938117
Rotazione Y: 0.937231
Rotazione Z: 0.710208

Modo	Periodo	Massa X	Massa Y	Massa Z	Massa rot X	Massa rot Y	Massa rot Z
1	0.601442865	0.000000105	0.005472386	0	0.010048739	0.000000294	0.00200701
2	0.58436998	0.000002349	0.004282606	0	0.006830699	0.000002345	0.000341886
3	0.511885659	0.000262235	0.000018088	0	0.000003401	0.000407237	0.000448167
4	0.509550424	0.00001171	0.014986786	0	0.032254792	0.000024071	0.008342881
5	0.453490085	0.005060791	0.000041618	0	0.000457963	0.007108228	0.000027607
6	0.448114311	0.000053329	0.065940976	0	0.054569169	0.000105857	0.033760282
7	0.409401274	0.000576279	0.094092385	0	0.11556581	0.000769458	0.048949789
8	0.371580813	0.046088382	0.004730309	0	0.006238782	0.065639345	0.009836204
9	0.310503742	0.330594366	0.001033036	0	0.000867364	0.425529091	0.124711783
10	0.294441883	0.001514153	0.149046337	0	0.147832866	0.001644052	0.064068475
11	0.241518571	0.278304492	0.001249879	0	0.001675053	0.267984891	0.137243093
12	0.235221024	0.00129973	0.461985612	0	0.555341879	0.001290093	0.188048361
13	0.202355713	0.197307625	0.000669862	0	0.000509743	0.163928386	0.03242631
14	0.085885092	0.000840556	0.126507409	0	0.005807652	0.000011488	0.035699307
15	0.07511304	0.091412199	0.000601422	0	0.000112714	0.002785782	0.024296613

2.7 Equilibrio forze

***Contributo**: Nome attribuito al sistema risultante.*
***Fx**: Componente X di traslazione del sistema risultante. [daN]*
***Fy**: Componente Y di traslazione del sistema risultante. [daN]*
***Fz**: Componente Z di traslazione del sistema risultante. [daN]*
***Mx**: Componente di momento attorno l'asse X del sistema risultante. [daN*cm]*
***My**: Componente di momento attorno l'asse Y del sistema risultante. [daN*cm]*
***Mz**: Componente di momento attorno l'asse Z del sistema risultante. [daN*cm]*

Bilancio in condizione di carico: Pesi strutturali

Contributo	Fx	Fy	Fz	Mx	My	Mz
Applicate	0	0	-2737602.419	-2265963755	2725026648	0
Reazioni	0	0	2737602.419	2265963754	-2725026648	0
PDelta	0	0	0	0	0	0
Totale	0	0	0	0	0	0

Bilancio in condizione di carico: Permanenti portati

Contributo	Fx	Fy	Fz	Mx	My	Mz
Applicate	0	0	-98533.187	-82603721	96888196	0
Reazioni	0	0	98533.187	82603721	-96888196	0
PDelta	0	0	0	0	0	0
Totale	0	0	0	0	0	0

Bilancio in condizione di carico: Variabile A

Contributo	Fx	Fy	Fz	Mx	My	Mz
Applicate	0	0	-128016.25	-108805992	127553906	0
Reazioni	0	0	128016.25	108805992	-127553906	0
PDelta	0	0	0	0	0	0
Totale	0	0	0	0	0	0

Bilancio in condizione di carico: neve

Contributo	Fx	Fy	Fz	Mx	My	Mz
Applicate	0	0	-25134.125	-20924159	25105251	0
Reazioni	0	0	25134.125	20924159	-25105251	0
PDelta	0	0	0	0	0	0
Totale	0	0	0	0	0	0

Bilancio in condizione di carico: Sisma X SLV

Contributo	Fx	Fy	Fz	Mx	My	Mz
Applicate	393266.028	0	0	0	290228493	-325819276
Reazioni	-393266.028	0	0	0	-290228493	325819276
PDelta	0	0	0	0	0	0
Totale	0	0	0	0	0	0

Bilancio in condizione di carico: Sisma Y SLV

Contributo	Fx	Fy	Fz	Mx	My	Mz
Applicate	0	393266.028	0	-290228493	0	393631579
Reazioni	0	-393266.028	0	290228493	0	-393631579
PDelta	0	0	0	0	0	0
Totale	0	0	0	0	0	0

Bilancio in condizione di carico: Eccentricità Y per sisma X SLV

Contributo	Fx	Fy	Fz	Mx	My	Mz
Applicate	0	0	0	0	0	-12029927
Reazioni	0	0	0	0	0	12029927
PDelta	0	0	0	0	0	0
Totale	0	0	0	0	0	0

Bilancio in condizione di carico: Eccentricità X per sisma Y SLV

Contributo	Fx	Fy	Fz	Mx	My	Mz
Applicate	0	0	0	0	0	14698682
Reazioni	0	0	0	0	0	-14698682
PDelta	0	0	0	0	0	0
Totale	0	0	0	0	0	0

Bilancio in condizione di carico: Sisma X SLD

Contributo	Fx	Fy	Fz	Mx	My	Mz
Applicate	387010.449	0	0	0	285611905	-320636555
Reazioni	-387010.449	0	0	0	-285611905	320636555
PDelta	0	0	0	0	0	0
Totale	0	0	0	0	0	0

Bilancio in condizione di carico: Sisma Y SLD

Contributo	Fx	Fy	Fz	Mx	My	Mz
Applicate	0	387010.449	0	-285611905	0	387370185
Reazioni	0	-387010.449	0	285611905	0	-387370185
PDelta	0	0	0	0	0	0
Totale	0	0	0	0	0	0

Bilancio in condizione di carico: Eccentricità Y per sisma X SLD

Contributo	Fx	Fy	Fz	Mx	My	Mz
Applicate	0	0	0	0	0	-11838570
Reazioni	0	0	0	0	0	11838570
PDelta	0	0	0	0	0	0
Totale	0	0	0	0	0	0

Bilancio in condizione di carico: Eccentricità X per sisma Y SLD

Contributo	Fx	Fy	Fz	Mx	My	Mz
Applicate	0	0	0	0	0	14464874
Reazioni	0	0	0	0	0	-14464874
PDelta	0	0	0	0	0	0
Totale	0	0	0	0	0	0

2.8 Risposta di spettro

***Spettro**: Condizione elementare corrispondente allo spettro.*
***n.b.**: Nome breve della condizione elementare.*
***Fx**: Componente della forza lungo l'asse X. [daN]*
***Fy**: Componente della forza lungo l'asse Y. [daN]*
***Fz**: Componente della forza lungo l'asse Z. [daN]*
***Mx**: Componente della coppia attorno all'asse X. [daN*cm]*
***My**: Componente della coppia attorno all'asse Y. [daN*cm]*
***Mz**: Componente della coppia attorno all'asse Z. [daN*cm]*
***Max X**: Massima reazione lungo l'asse X.*
***Valore**: Valore massimo della reazione. [daN]*
***Angolo**: Angolo d'ingresso del sisma che provoca il valore massimo della reazione. [deg]*
***Max Y**: Massima reazione lungo l'asse Y.*
***Valore**: Valore massimo della reazione. [daN]*
***Angolo**: Angolo d'ingresso del sisma che provoca il valore massimo della reazione. [deg]*
***Max Z**: Massima reazione lungo l'asse Z.*
***Valore**: Valore massimo della reazione. [daN]*
***Angolo**: Angolo d'ingresso del sisma che provoca il valore massimo della reazione. [deg]*

Spettro	Fx	Fy	Fz	Mx	My	Mz	Max X		Max Y		Max Z	
n.b.							Valore	Angolo	Valore	Angolo	Valore	Angolo
X SLV	218009.15	9047.86	0	5.363E06	1.445E08	1.866E08	218009.15	179	218911.35	89	0	0
Y SLV	9047.86	218908.1	0	1.483E08	5635386.9	2.177E08	218009.15	179	218911.35	89	0	0
X SLD	212531.1	8354.12	0	5.240E06	1.422E08	1.823E08	212531.1	0	211955.31	90	0	0
Y SLD	8354.12	211955.31	0	1.458E08	5531819	2.119E08	212531.1	0	211955.31	90	0	0

2.9 Annotazioni solutore

***Informazioni**: Informazioni fornite dal solutore al termine del calcolo del modello.*

Informazioni

2.10 Statistiche soluzione

Tipo di equazioni	Lineari
Tecnica di soluzione	Matrici sparse
Numero equazioni	47952
Elemento minimo diagonale	10858.78226465
Elemento massimo	142143080235771
Rapporto max/min	1.309014922E010
Elementi non nulli	1281738

3 Verifiche

3.1 Verifica edifici esistenti

Descrizione: Descrizione
Stato limite: V=Taglio; PF=Presso flessione; PFFP=Presso flessione fuori piano; R=Ribaltamento
molt.: moltiplicatore minimo della azione sismica che produce lo stato limte
comb.: combinazione
PGA: PGA
PGA/PGArif: PGA/PGArif
TR: Tempo di ritorno
(TR/TRrif)^.41: (TR/TRrif)^.41
maschio: maschio
verifica: verifica
: [cm/s2]

Le unità di misura delle verifiche elencate nel capitolo sono in [cm, s] ove non espressamente specificato.

Verifica di edificio esistente con fattore q secondo C8.7.2.4
Accelerazione di aggancio SLV (ag/g_SLV*S*ST) PGA,SLVrif = 0.188
Accelerazione di aggancio SLD (ag/g_SLD*S*ST) PGA,SLDrif = 0.071
Tr,SLVrif = 475 anni
Tr,SLDrif = 50 anni

Moltiplicatore minimo delle condizioni sismiche per raggiungimento della rottura a taglio 1.026
Maschio 13 "Fondazione - Piano 1"
lunghezza= 560 altezza= 400 spessore= 45 sezione a quota= 0
combinazione SLV 4 N= -103364 V par.= 27624 l'= 0 fvd= 0.65 Vt scorrimento= 0 Vt fess. diag.= 0
tempo di ritorno 505 anni
indicatore iTr=(Tr/Tr,SLVrif)^.41 = 1.025
PGA 0.193
indicatore iPGA=PGA/PGA,SLVrif = 1.024

Moltiplicatore minimo delle condizioni sismiche per raggiungimento della rottura a flessione 1.228
Maschio 42 "Piano 1 - copertura"
lunghezza= 298.4 altezza= 460 spessore= 70 sezione a quota= 500
combinazione SLV 5 N = -27419 M = 3507814 sigma0 = 1.31 fd = 11.11 Mu = 3522763
tempo di ritorno 800 anni
indicatore iTr=(Tr/Tr,SLVrif)^.41 = 1.238
PGA 0.229
indicatore iPGA=PGA/PGA,SLVrif = 1.216

Moltiplicatore minimo delle condizioni sismiche per raggiungimento della rottura a pressoflessione nel piano ortogonale 1.626
Maschio 33 "Piano 1 - copertura"
lunghezza= 320 altezza= 460 spessore= 70 sezione a quota= 730
combinazione SLV 12 fd= 11.11 Ta= 0 Wa= 0.15 N= -8259 M= 277419 Mc= 277778
tempo di ritorno 1666 anni
indicatore iTr=(Tr/Tr,SLVrif)^.41 = 1.673
PGA 0.295
indicatore iPGA=PGA/PGA,SLVrif = 1.566

Moltiplicatore minimo delle condizioni sismiche per raggiungimento della rottura per meccanismi locali di collasso 1.15
Maschio 3 "Fondazione - Piano 1"
lunghezza= 320 altezza= 400 spessore= 85 f.agg.= 30 a.lim.= 846.0452
combinazione SLV 4 N top= -66623 N base= 0 T orto= 8376 alfa0= 0.138 M*= 86.716 e*= 0.939 a0*= 106.75
tempo di ritorno 677 anni
indicatore iTr=(Tr/Tr,SLVrif)^.41 = 1.156
PGA 0.215
indicatore iPGA=PGA/PGA,SLVrif = 1.142

Moltiplicatore minimo delle condizioni sismiche per raggiungimento dello spostamento limite di interpiano 9.262
combinazione SLD 10
tra Nodo 4211 e Nodo 8581
tempo di ritorno 1832 anni
indicatore iTr=(Tr/Tr,SLDrif)^.41 = 4.377
PGA 0.304
indicatore iPGA=PGA/PGA,SLDrif = 4.274

Moltiplicatore minimo delle condizioni sismiche per raggiungimento della pressione massima al suolo 2.442
combinazione SLV fondazioni 12
Nodo 4 di coordinate 142,5;140,0;-50,0
tempo di ritorno 1832 anni
indicatore iTr=(Tr/Tr,SLVrif)^.41 = 1.739
PGA 0.304
indicatore iPGA=PGA/PGA,SLVrif = 1.616

Indicatori minimi riferiti al solo materiale muratura

Descrizione	Stato limite	molt.	comb.	PGA	PGA/PGArif	TR	(TR/TRrif)^.41
Maschio 42 "Piano 1 - copertura"	PF	1.228	SLV 5	0.229	1.216	800	1.238
Maschio 13 "Fondazione - Piano 1"	T	1.026	SLV 4	0.193	1.024	505	1.025
Maschio 33 "Piano 1 - copertura"	PFFP	1.626	SLV 12	0.295	1.566	1666	1.673
Maschio 3 "Fondazione - Piano 1"	R	1.15	SLV 4	0.215	1.142	677	1.156

Verifica maschi in muratura

maschio	Stato limite	molt.	comb.	PGA	PGA/PGArif	TR	(TR/TRrif)^.41	verifica
1	PF	2.486	SLV 12	0.304	1.616	1832	1.739	
	V	2.061	SLV 12	0.304	1.616	1832	1.739	
	PFFP	4.428	SLV 12	0.304	1.616	1832	1.739	
	R	1.383	SLV 1	0.255	1.356	1083	1.402	
2	PFFP	3.869	SLV 15	0.304	1.616	1832	1.739	
	R	1.673	SLV 2	0.302	1.606	1796	1.725	
3	PF	2.346	SLV 9	0.304	1.616	1832	1.739	
	V	2.776	SLV 9	0.304	1.616	1832	1.739	
	PFFP	3.615	SLV 9	0.304	1.616	1832	1.739	
	R	1.15	SLV 4	0.215	1.142	677	1.156	
4	PFFP	2.802	SLV 5	0.304	1.616	1832	1.739	
	R	1.528	SLV 8	0.279	1.482	1413	1.564	
5	PFFP	3.657	SLV 15	0.304	1.616	1832	1.739	
	R	1.984	SLV 6	0.304	1.616	1832	1.739	
6	PFFP	2.258	SLV 16	0.304	1.616	1832	1.739	
	R	1.828	SLV 5	0.304	1.616	1832	1.739	
7	PFFP	3.646	SLV 16	0.304	1.616	1832	1.739	
	R	2.393	SLV 3	0.304	1.616	1832	1.739	
8	PF	1.476	SLV 14	0.271	1.437	1289	1.506	
	V	1.041	SLV 14	0.196	1.039	526	1.043	
	PFFP	2.983	SLV 14	0.304	1.616	1832	1.739	
	R	2.051	SLV 7	0.304	1.616	1832	1.739	
9	PFFP	3.165	SLV 14	0.304	1.616	1832	1.739	
	R	1.673	SLV 7	0.302	1.606	1796	1.725	
10	PF	3.553	SLV 8	0.304	1.616	1832	1.739	
	V	1.16	SLV 8	0.217	1.152	693	1.167	
	PFFP	4.92	SLV 8	0.304	1.616	1832	1.739	
	R	1.906	SLV 5	0.304	1.616	1832	1.739	
11	PF	3.833	SLV 5	0.304	1.616	1832	1.739	
	V	1.103	SLV 5	0.207	1.098	609	1.107	
	PFFP			0.304	1.616	1832	1.739	
	R	1.885	SLV 16	0.304	1.616	1832	1.739	
12	PF	2.543	SLV 15	0.304	1.616	1832	1.739	
	V	1.704	SLV 15	0.304	1.616	1832	1.739	
	PFFP	2.74	SLV 15	0.304	1.616	1832	1.739	
	R	1.362	SLV 6	0.252	1.338	1040	1.379	
13	PF	3.776	SLV 15	0.304	1.616	1832	1.739	
	V	1.026	SLV 4	0.193	1.024	505	1.025	
	PFFP			0.304	1.616	1832	1.739	
	R	1.896	SLV 9	0.304	1.616	1832	1.739	
14	PF	1.994	SLV 14	0.304	1.616	1832	1.739	
	V	1.29	SLV 14	0.24	1.274	907	1.304	
	PFFP	2.704	SLV 14	0.304	1.616	1832	1.739	
	R	1.507	SLV 7	0.276	1.464	1362	1.54	
15	PF	2.859	SLV 15	0.304	1.616	1832	1.739	
	V	1.243	SLV 2	0.232	1.23	826	1.255	
	PFFP			0.304	1.616	1832	1.739	
	R	1.989	SLV 8	0.304	1.616	1832	1.739	
16	PF	2.222	SLV 4	0.304	1.616	1832	1.739	
	V	1.875	SLV 4	0.304	1.616	1832	1.739	
	PFFP	3.496	SLV 4	0.304	1.616	1832	1.739	
	R	1.367	SLV 9	0.253	1.342	1051	1.385	
17	PF	2.771	SLV 4	0.304	1.616	1832	1.739	
	V	1.471	SLV 15	0.27	1.433	1277	1.5	
	PFFP			0.304	1.616	1832	1.739	
	R	1.839	SLV 6	0.304	1.616	1832	1.739	
18	PF	2.02	SLV 1	0.304	1.616	1832	1.739	
	V	1.362	SLV 1	0.252	1.338	1040	1.379	
	PFFP	2.937	SLV 1	0.304	1.616	1832	1.739	
	R	1.404	SLV 12	0.259	1.374	1127	1.425	
19	PF	5.076	SLV 7	0.304	1.616	1832	1.739	
	V	1.253	SLV 11	0.234	1.24	844	1.266	
	PFFP			0.304	1.616	1832	1.739	
	R	1.906	SLV 2	0.304	1.616	1832	1.739	
20	PF	3.273	SLV 10	0.304	1.616	1832	1.739	
	V	1.243	SLV 10	0.232	1.23	826	1.255	
	PFFP			0.304	1.616	1832	1.739	
	R	1.906	SLV 7	0.304	1.616	1832	1.739	
21	PFFP	3.776	SLV 4	0.304	1.616	1832	1.739	
	R	1.746	SLV 13	0.304	1.616	1832	1.739	
22	PFFP			0.304	1.616	1832	1.739	
	R	1.709	SLV 14	0.304	1.616	1832	1.739	
23	PF	2.196	SLV 1	0.304	1.616	1832	1.739	
	V	1.145	SLV 1	0.214	1.138	670	1.151	
	PFFP			0.304	1.616	1832	1.739	
	R	1.87	SLV 7	0.304	1.616	1832	1.739	
24	PFFP			0.304	1.616	1832	1.739	
	R	1.761	SLV 16	0.304	1.616	1832	1.739	
25	PFFP			0.304	1.616	1832	1.739	
	R	1.689	SLV 7	0.304	1.616	1832	1.739	
26	PFFP	5.184	SLV 7	0.304	1.616	1832	1.739	
	R	1.549	SLV 15	0.282	1.5	1463	1.586	
27	PF	2.507	SLV 7	0.304	1.616	1832	1.739	
	V	1.844	SLV 7	0.304	1.616	1832	1.739	
	PFFP	3.294	SLV 7	0.304	1.616	1832	1.739	
	R	1.233	SLV 14	0.23	1.221	808	1.243	
28	PFFP	3.838	SLV 2	0.304	1.616	1832	1.739	
	R	1.518	SLV 15	0.277	1.473	1387	1.552	
29	PF	2.222	SLV 6	0.304	1.616	1832	1.739	
	V	2.124	SLV 6	0.304	1.616	1832	1.739	
	PFFP	3.367	SLV 6	0.304	1.616	1832	1.739	
	R	1.259	SLV 15	0.234	1.245	852	1.271	
30	PFFP	5.164	SLV 10	0.304	1.616	1832	1.739	
	R	1.507	SLV 7	0.276	1.464	1362	1.54	
31	PFFP	4.397	SLV 13	0.304	1.616	1832	1.739	
	R	2.657	SLV 4	0.304	1.616	1832	1.739	
32	PFFP	4.382	SLV 12	0.304	1.616	1832	1.739	
	R	2.315	SLV 13	0.304	1.616	1832	1.739	
33	PF	1.388	SLV 12	0.256	1.36	1094	1.408	
	V	1.057	SLV 9	0.198	1.054	545	1.058	

maschio	Stato limite	molt.	comb.	PGA	PGA/PGArif	TR	(TR/TRrif)^.41	verifica
	PFFP	1.626	SLV 12	0.295	1.566	1666	1.673	
	R	2.362	SLV 5	0.304	1.616	1832	1.739	
34	PF	1.554	SLV 9	0.283	1.504	1477	1.592	
	V	1.419	SLV 9	0.261	1.388	1160	1.442	
	PFFP	1.761	SLV 9	0.304	1.616	1832	1.739	
	R	2.248	SLV 8	0.304	1.616	1832	1.739	
35	PFFP	2.061	SLV 5	0.304	1.616	1832	1.739	
	R	2.429	SLV 12	0.304	1.616	1832	1.739	
36	PFFP	2.507	SLV 7	0.304	1.616	1832	1.739	
	R	2.512	SLV 10	0.304	1.616	1832	1.739	
37	PFFP	2.243	SLV 1	0.304	1.616	1832	1.739	
	R	2.657	SLV 12	0.304	1.616	1832	1.739	
38	PF	3.734	SLV 14	0.304	1.616	1832	1.739	
	V	1.176	SLV 15	0.22	1.167	717	1.184	
	PFFP	3.009	SLV 6	0.304	1.616	1832	1.739	
	R	2.305	SLV 11	0.304	1.616	1832	1.739	
39	PFFP	3.191	SLV 6	0.304	1.616	1832	1.739	
	R	2.595	SLV 12	0.304	1.616	1832	1.739	
40	PFFP	2.408	SLV 12	0.304	1.616	1832	1.739	
	R	2.103	SLV 4	0.304	1.616	1832	1.739	
41	PF	1.683	SLV 12	0.304	1.615	1825	1.736	
	V	1.274	SLV 12	0.237	1.259	879	1.287	
	PFFP	2.605	SLV 12	0.304	1.616	1832	1.739	
	R	1.922	SLV 1	0.304	1.616	1832	1.739	
42	PF	1.228	SLV 5	0.229	1.216	800	1.238	
	V	1.026	SLV 5	0.193	1.024	505	1.025	
	PFFP	1.792	SLV 5	0.304	1.616	1832	1.739	
	R	1.823	SLV 12	0.304	1.616	1832	1.739	
43	PFFP	3.688	SLV 10	0.304	1.616	1832	1.739	
	R	2.072	SLV 2	0.304	1.616	1832	1.739	
44	PF	3.569	SLV 13	0.304	1.616	1832	1.739	
	V	2.077	SLV 13	0.304	1.616	1832	1.739	
	PFFP	2.206	SLV 15	0.304	1.616	1832	1.739	
	R	2.45	SLV 4	0.304	1.616	1832	1.739	
45	PF	4.843	SLV 12	0.304	1.616	1832	1.739	
	V	1.171	SLV 4	0.219	1.162	709	1.178	
	PFFP	2.429	SLV 16	0.304	1.616	1832	1.739	
	R	2.315	SLV 5	0.304	1.616	1832	1.739	
46	PF	2.496	SLV 16	0.304	1.616	1832	1.739	
	V	1.916	SLV 16	0.304	1.616	1832	1.739	
	PFFP	1.896	SLV 16	0.304	1.616	1832	1.739	
	R	2.253	SLV 5	0.304	1.616	1832	1.739	
47	PF	2.89	SLV 6	0.304	1.616	1832	1.739	
	V	1.59	SLV 2	0.289	1.535	1570	1.633	
	PFFP	2.17	SLV 2	0.304	1.616	1832	1.739	
	R	2.134	SLV 11	0.304	1.616	1832	1.739	
48	PF	3.128	SLV 3	0.304	1.616	1832	1.739	
	V	1.435	SLV 16	0.264	1.401	1194	1.459	
	PFFP	4.459	SLV 8	0.304	1.616	1832	1.739	
	R	1.942	SLV 5	0.304	1.616	1832	1.739	
49	PF	3.04	SLV 6	0.304	1.616	1832	1.739	
	V	2.771	SLV 2	0.304	1.616	1832	1.739	
	PFFP	3.02	SLV 2	0.304	1.616	1832	1.739	
	R	2.683	SLV 5	0.304	1.616	1832	1.739	
50	PF			0.304	1.616	1832	1.739	
	V	1.709	SLV 2	0.304	1.616	1832	1.739	
	PFFP			0.304	1.616	1832	1.739	
	R	3.128	SLV 10	0.304	1.616	1832	1.739	
51	PF	2.978	SLV 1	0.304	1.616	1832	1.739	
	V	2.072	SLV 1	0.304	1.616	1832	1.739	
	PFFP	1.979	SLV 1	0.304	1.616	1832	1.739	
	R	2.579	SLV 10	0.304	1.616	1832	1.739	
52	PFFP	2.999	SLV 11	0.304	1.616	1832	1.739	
	R	1.792	SLV 15	0.304	1.616	1832	1.739	
53	PF	1.968	SLV 11	0.304	1.616	1832	1.739	
	V	1.43	SLV 11	0.263	1.397	1183	1.454	
	PFFP	2.989	SLV 11	0.304	1.616	1832	1.739	
	R	1.652	SLV 1	0.299	1.588	1738	1.702	
54	PF	1.652	SLV 10	0.299	1.588	1738	1.702	
	V	1.062	SLV 10	0.199	1.059	553	1.064	
	PFFP	3.18	SLV 10	0.304	1.616	1832	1.739	
	R	1.569	SLV 7	0.286	1.517	1516	1.609	
55	PFFP	4.283	SLV 5	0.304	1.616	1832	1.739	
	R	1.751	SLV 13	0.304	1.616	1832	1.739	
56	PFFP	2.357	SLV 4	0.304	1.616	1832	1.739	
	R	2.569	SLV 9	0.304	1.616	1832	1.739	
57	PF			0.304	1.616	1832	1.739	
	V	1.544	SLV 1	0.282	1.495	1451	1.581	
	PFFP			0.304	1.616	1832	1.739	
	R	2.403	SLV 10	0.304	1.616	1832	1.739	
58	PFFP	1.922	SLV 9	0.304	1.616	1832	1.739	
	R	2.838	SLV 8	0.304	1.616	1832	1.739	
59	PFFP	3.579	SLV 7	0.304	1.616	1832	1.739	
	R	1.999	SLV 15	0.304	1.616	1832	1.739	
60	PF	1.549	SLV 7	0.282	1.5	1463	1.586	
	V	1.461	SLV 7	0.268	1.424	1253	1.488	
	PFFP	1.973	SLV 3	0.304	1.616	1832	1.739	
	R	1.932	SLV 14	0.304	1.616	1832	1.739	
61	PF	1.611	SLV 6	0.293	1.553	1625	1.656	
	V	1.533	SLV 6	0.28	1.486	1425	1.569	
	PFFP	1.834	SLV 6	0.304	1.616	1832	1.739	
	R	1.88	SLV 7	0.304	1.616	1832	1.739	
62	PFFP	3.206	SLV 6	0.304	1.616	1832	1.739	
	R	1.875	SLV 7	0.304	1.616	1832	1.739	

3.2 Verifiche maschi in muratura

X ini.: coordinate del punto iniziale del maschio [cm]

Y ini.: coordinate del punto iniziale del maschio [cm]
X fin.: coordinate del punto finale del maschio [cm]
Y fin.: coordinate del punto finale del maschio [cm]
quota i.: livello o falda inferiore
quota.s: livello o falda superiore
l: lunghezza del maschio [cm]
sp.: spessore [cm]
h netta: altezza netta (a filo solai) [cm]
h ini.: altezza nel modello al punto iniziale [cm]
h fin.: altezza nel modello al punto finale [cm]
a: distanza tra irrigidimenti laterali
comb.: posizione della sezione di verifica
quota: descrizione delle barre di armatura [cm]
N: sforzo normale alla quota [daN]
*M: momento flettente nel piano [daN*cm]*
p: fattore laterale di vincolo (4.5.6)
es1: eccentricità dovuta alla posizione eccentrica dei maschi sovrastanti la sezione di verifica [cm]
es2: eccentricità dovuta alla risultante eccentrica delle reazioni di appoggio dei solai soprastanti [cm]
ea: eccentricità dovuta a tolleranze di esecuzione [cm]
ev: eccentricità dovuta ad azioni ortogonali (vento, sisma)
e ver (cm): eccentricità di verifica nel piano normale al piano medio del maschio
Ft: coefficiente di riduzione della resistenza per eccentricità nel piano normale al mediano
Fl: coefficiente di riduzione della resistenza per eccentricità nel piano mediano
Nu (daN): sforzo normale ultimo
Vd: taglio di progetto [daN]
ftd: resistenza a trazione per fessurazione diagonale [daN/cm2]
b: coefficiente correttivo [cm]
sigma0: tensione normale media riferita all'area totale della sezione [daN/cm2]
Vu: taglio ultimo [daN]
c.s.: coefficiente di sicurezza
V par: taglio nel piano [daN]
V orto: taglio fuori piano [daN]
*M orto: momento flettente fuori piano [daN*cm]*
*N/(l*sp): tensione media di compressione [daN/cm2]*
*N/(l'*sp): tensione media di compressione sulla parte reagente [daN/cm2]*
*Mu: momento flettente ultimo [daN*cm]*
l': larghezza della parte compressa della parete [cm]
fvd: resistenza a taglio di calcolo [daN/cm2]
Vt scorr.: taglio ultimo per verifica a scorrimento [daN]
Vt fess.diag.: taglio ultimo per verifica a fessurazione diagonale [daN]
fd: resistenza a compressione di calcolo [daN/cm2]
Sa: accelerazione massima, adimensionalizzata rispetto a g, che l'elemento strutturale subisce durante il sisma
x: ampiezza reagente al collasso [cm]
*Mc: momento di collasso per azioni perpendicolari al piano [daN*cm]*
combinazione: combinazione
N top: sforzo normale in sommità [daN]
N base: sforzo normale al piede [daN]
alfa0: moltiplicatore secondo (C8A.4.1)
M: massa partecipante al cinematismo (C8A.4.3) [daN/(cm/s2)]*
e: frazione di massa partecipante della muratura (C8A.4.4)*
a0: accelerazione spettrale di attivazione del meccanismo (C8A.4.4) [cm/s2]*
quota sezione: quota della sezione di verifica [cm]
gamma m.: fattore parziale di sicurezza della muratura
gamma s.: fattore parziale di sicurezza dell'acciaio
gamma c.: fattore parziale di sicurezza dell'acciaio
V: taglio nel piano [daN]
d: distanza tra lembo compresso e baricentro dell'armatura tesa [cm]
Vt,c: taglio limite secondo (7.8.10) [daN]
Vt,M: resistenza a taglio secondo (7.8.8) [daN]
Vt,S: resistenza a taglio secondo (7.8.9) [daN]
fcd: resistenza a compressione di calcolo del betoncino [daN/cm2]
fyd: resistenza di calcolo dell'acciaio [daN/cm2]

Le unità di misura delle verifiche elencate nel capitolo sono in [cm, daN, s] ove non espressamente specificato.

Maschio 1
Dati geometrici

X ini.	Y ini.	X fin.	Y fin.	quota i.	quota.s	l	sp.	h netta	h ini.	h fin.	a
142.5	655	142.5	142.5	L1	L2	512.5	85	400	500	500	

Materiale: Muratura in pietrame consolidata con iniezioni LC1
f medio 30
tau 0.9
E 24000
G 8053.69
Fattore di confidenza 1.35

Verifica a pressoflessione per azioni non sismiche 4.5.6.2 D.M. 14-01-08 (N.T.C.) gammaM 3

comb.	quota	N	M	p	es1	es2	ea	ev	e ver (cm)	Ft	Fl	Nu (daN)	
1	500	-65423	-620415	1	-3.38	2.13	2	0,00	3,25	0,85	0,94	259249	
1	200	-98125	-3566026	1	-3.38	2.13	2	0,00	2,00	0,90	0,78	225751	
1	0	-115983	-1643526	1	-3.38	2.13	2	0,00	3,25	0,85	0,91	251398	
2	500	-67060	-703217	1	-3.39	2.08	2	0,00	3,31	0,85	0,94	256880	

muratura

comb.	quota	N	M	p	es1	es2	ea	ev	e ver (cm)	Ft	Fl	Nu (daN)	
2	200	-99982	-3666322	1	-3.39	2.08	2	0,00	2,00	0,90	0,78	225171	
2	0	-117690	-1671586	1	-3.39	2.08	2	0,00	3,31	0,85	0,91	250671	
3	500	-74048	-782494	1	-3.17	2.58	2	0,00	2,59	0,88	0,94	264719	
3	200	-107776	-3904844	1	-3.17	2.58	2	0,00	2,00	0,90	0,78	225946	
3	0	-124908	-1670213	1	-3.17	2.58	2	0,00	2,59	0,88	0,92	259889	
4	500	-75405	-733667	1	-3.08	2.83	2	0,00	2,24	0,89	0,94	269991	
4	200	-109259	-3906773	1	-3.08	2.83	2	0,00	2,00	0,90	0,78	226783	
4	0	-126294	-1641564	1	-3.08	2.83	2	0,00	2,24	0,89	0,92	264281	
5	500	-76224	-775068	1	-3.08	2.8	2	0,00	2,28	0,89	0,94	268802	
5	200	-110187	-3956920	1	-3.08	2.8	2	0,00	2,00	0,90	0,78	226511	
5	0	-127147	-1655594	1	-3.08	2.8	2	0,00	2,28	0,89	0,92	263826	
6	500	-73614	-660188	1	-3.2	2.57	2	0,00	2,63	0,88	0,95	266994	
6	200	-107256	-3820055	1	-3.2	2.57	2	0,00	2,00	0,90	0,78	227031	
6	0	-124464	-1656386	1	-3.2	2.57	2	0,00	2,63	0,88	0,92	259533	
7	500	-75251	-742990	1	-3.21	2.51	2	0,00	2,70	0,87	0,94	264673	
7	200	-109113	-3920350	1	-3.21	2.51	2	0,00	2,00	0,90	0,78	226478	
7	0	-126171	-1684446	1	-3.21	2.51	2	0,00	2,70	0,87	0,92	258712	
8	500	-82239	-822266	1	-3.03	2.93	2	0,00	2,10	0,89	0,94	271090	
8	200	-116907	-4158872	1	-3.03	2.93	2	0,00	2,00	0,90	0,78	227105	
8	0	-133388	-1683073	1	-3.03	2.93	2	0,00	2,10	0,89	0,92	266487	
9	500	-83596	-773440	1	-2.95	3.14	2	0,00	2,20	0,89	0,94	271335	
9	200	-118390	-4160801	1	-2.95	3.14	2	0,00	2,00	0,90	0,79	227863	
9	0	-134774	-1654424	1	-2.95	3.14	2	0,00	2,20	0,89	0,93	266043	
10	500	-84415	-814841	1	-2.95	3.11	2	0,00	2,16	0,89	0,94	271065	
10	200	-119318	-4210949	1	-2.95	3.11	2	0,00	2,00	0,90	0,79	227604	
10	0	-135628	-1668454	1	-2.95	3.11	2	0,00	2,16	0,89	0,93	266421	
11	500	-85049	-806540	1	-3.38	2.13	2	0,00	3,25	0,85	0,94	259249	
11	200	-127563	-4635834	1	-3.38	2.13	2	0,00	2,00	0,90	0,78	225751	
11	0	-150779	-2136584	1	-3.38	2.13	2	0,00	3,25	0,85	0,91	251398	
12	500	-86687	-889342	1	-3.39	2.09	2	0,00	3,29	0,85	0,94	257416	
12	200	-129419	-4736130	1	-3.39	2.09	2	0,00	2,00	0,90	0,78	225303	
12	0	-152486	-2164644	1	-3.39	2.09	2	0,00	3,29	0,85	0,91	250836	
13	500	-93675	-968618	1	-3.22	2.49	2	0,00	2,73	0,87	0,94	263581	
13	200	-137213	-4974652	1	-3.22	2.49	2	0,00	2,00	0,90	0,78	225904	
13	0	-159703	-2163270	1	-3.22	2.49	2	0,00	2,73	0,87	0,92	258092	
14	500	-95032	-919792	1	-3.14	2.69	2	0,00	2,45	0,88	0,94	267776	
14	200	-138697	-4976581	1	-3.14	2.69	2	0,00	2,00	0,90	0,78	226564	
14	0	-161089	-2134622	1	-3.14	2.69	2	0,00	2,45	0,88	0,92	261587	
15	500	-95850	-961193	1	-3.14	2.66	2	0,00	2,48	0,88	0,94	266854	
15	200	-139625	-5026728	1	-3.14	2.66	2	0,00	2,00	0,90	0,78	226351	
15	0	-161942	-2148652	1	-3.14	2.66	2	0,00	2,48	0,88	0,92	261248	
16	500	-93240	-846312	1	-3.24	2.48	2	0,00	2,76	0,87	0,94	265360	
16	200	-136694	-4889863	1	-3.24	2.48	2	0,00	2,00	0,90	0,78	226755	
16	0	-159259	-2149444	1	-3.24	2.48	2	0,00	2,76	0,87	0,92	257802	
17	500	-94878	-929114	1	-3.25	2.43	2	0,00	2,81	0,87	0,94	263553	
17	200	-138551	-4990158	1	-3.25	2.43	2	0,00	2,00	0,90	0,78	226324	
17	0	-160966	-2177504	1	-3.25	2.43	2	0,00	2,81	0,87	0,92	257181	
18	500	-101866	-1008391	1	-3.1	2.77	2	0,00	2,32	0,89	0,94	268815	
18	200	-146344	-5228680	1	-3.1	2.77	2	0,00	2,00	0,90	0,78	226833	
18	0	-168183	-2176130	1	-3.1	2.77	2	0,00	2,32	0,89	0,92	263522	
19	500	-103223	-959565	1	-3.03	2.95	2	0,00	2,08	0,90	0,94	272632	
19	200	-147828	-5230609	1	-3.03	2.95	2	0,00	2,00	0,90	0,78	227442	
19	0	-169569	-2147482	1	-3.03	2.95	2	0,00	2,08	0,90	0,92	266707	
20	500	-104042	-1000965	1	-3.03	2.93	2	0,00	2,11	0,89	0,94	271735	
20	200	-148756	-5280757	1	-3.03	2.93	2	0,00	2,00	0,90	0,78	227237	
20	0	-170423	-2161512	1	-3.03	2.93	2	0,00	2,11	0,89	0,92	266354	

Verifica a taglio con rottura per fessurazione diagonale per azioni non sismiche Circ.617 C8.7.1.5 gammaM 3

comb.	quota	Vd	N	ftd	b	sigma0	Vu	c.s.	
SLU 1	250	-384	-94367	0.33	1	2.17	39764	100	
SLU 1	100	-501	-109249	0.33	1	2.51	42394	84.65	
SLU 2	250	-229	-96223	0.33	1	2.21	40101	100	
SLU 2	100	-348	-111107	0.33	1	2.55	42711	100	
SLU 3	250	248	-104019	0.33	1	2.39	41488	100	
SLU 3	100	124	-118890	0.33	1	2.73	44014	100	
SLU 4	250	297	-105503	0.33	1	2.42	41747	100	
SLU 4	100	173	-120368	0.33	1	2.76	44257	100	
SLU 5	250	375	-106431	0.33	1	2.44	41909	100	
SLU 5	100	250	-121297	0.33	1	2.78	44409	100	
SLU 6	250	14	-103498	0.33	1	2.38	41397	100	
SLU 6	100	-111	-118374	0.33	1	2.72	43929	100	
SLU 7	250	169	-105354	0.33	1	2.42	41722	100	
SLU 7	100	42	-120231	0.33	1	2.76	44235	100	
SLU 8	250	646	-113149	0.33	1	2.6	43057	66.67	
SLU 8	100	514	-128015	0.33	1	2.94	45494	88.58	
SLU 9	250	695	-114634	0.33	1	2.63	43306	62.31	
SLU 9	100	563	-129493	0.33	1	2.97	45730	81.19	
SLU 10	250	773	-115562	0.33	1	2.65	43462	56.26	
SLU 10	100	640	-130422	0.33	1	2.99	45877	71.73	
SLU 11	250	-499	-122677	0.33	1	2.82	44634	89.47	
SLU 11	100	-651	-142024	0.33	1	3.26	47678	73.23	
SLU 12	250	-344	-124533	0.33	1	2.86	44935	100	
SLU 12	100	-498	-143881	0.33	1	3.3	47960	96.22	
SLU 13	250	133	-132329	0.33	1	3.04	46178	100	
SLU 13	100	-27	-151665	0.33	1	3.48	49124	100	
SLU 14	250	182	-133813	0.33	1	3.07	46411	100	
SLU 14	100	23	-153143	0.33	1	3.52	49342	100	
SLU 15	250	259	-134741	0.33	1	3.09	46555	100	
SLU 15	100	99	-154072	0.33	1	3.54	49478	100	
SLU 16	250	-101	-131808	0.33	1	3.03	46096	100	
SLU 16	100	-261	-151149	0.33	1	3.47	49048	100	
SLU 17	250	54	-133664	0.33	1	3.07	46387	100	
SLU 17	100	-109	-153006	0.33	1	3.51	49322	100	
SLU 18	250	531	-141459	0.33	1	3.25	47592	89.68	
SLU 18	100	363	-160789	0.33	1	3.69	50454	100	
SLU 19	250	580	-142944	0.33	1	3.28	47818	82.46	
SLU 19	100	413	-162268	0.33	1	3.72	50667	100	
SLU 20	250	657	-143872	0.33	1	3.3	47958	72.95	
SLU 20	100	489	-163197	0.33	1	3.75	50800	100	

Verifica a pressoflessione nel piano (7.8.2.2) e taglio con rottura per fessurazione diagonale (C8.7.1.5), gammaM = 2

comb.	quota	N	V par	V orto	M	M orto	N/(l*sp)	N/(l'*sp)	Mu	l'	fvd	Vt scorr.	Vt fess.diag.	
SLV 1	0	-138955	13278	-2766	-2420104	186526	3.19	3.19	23581208	512.5	0.97	42312	59170	
SLV 1	500	-89897	-1651	9041	-3578583	438867	2.06	2.06	18002595	512.5	0.75	32500	49320	
SLV 2	0	-135831	10129	-2814	-3404329	189587	3.12	3.12	23315342	512.5	0.96	41687	58592	
SLV 2	500	-87715	-5216	8879	-3169757	429217	2.01	2.01	17684953	512.5	0.74	32064	48836	
SLV 3	0	-129666	5436	-2352	-4272486	140891	2.98	2.98	22755002	512.5	0.93	40454	57434	
SLV 3	500	-82270	-9285	8860	-2249085	444968	1.89	1.89	16866178	512.5	0.71	30975	47606	
SLV 4	0	-126542	2287	-2400	-5256712	143952	2.9	2.9	22452986	512.5	0.91	39829	56839	
SLV 4	500	-80089	-12849	8698	-1840260	435318	1.84	1.84	16527816	512.5	0.7	30539	47105	
SLV 5	0	-143636	23256	-1556	1327622	129226	3.3	3.3	23956759	512.5	0.99	43248	60025	
SLV 5	500	-90438	8310	6382	-3725004	337277	2.08	2.08	18080571	512.5	0.75	32608	49440	
SLV 6	0	-140157	19749	-1609	231553	132636	3.22	3.22	23680196	512.5	0.98	42552	59390	
SLV 6	500	-88009	4341	6202	-3269720	326530	2.02	2.02	17728098	512.5	0.74	32123	48902	
SLV 7	0	-112672	-2884	-177	-4846987	-22891	2.59	2.59	20965251	512.5	0.85	37055	54116	
SLV 7	500	-65018	-17135	5779	706654	357615	1.49	1.49	14027941	512.5	0.63	27524	43481	
SLV 8	0	-109193	-6391	-231	-5943056	-19481	2.51	2.51	20554495	512.5	0.83	36359	53411	
SLV 8	500	-62589	-21104	5599	1161938	346869	1.44	1.44	13598551	512.5	0.62	27039	42868	
SLV 9	0	-138206	23814	-107	2639642	34626	3.17	3.17	23518535	512.5	0.97	42162	59032	
SLV 9	500	-83170	9042	3915	-2501099	255832	1.91	1.91	17004049	512.5	0.72	31155	47812	
SLV 10	0	-134727	20307	-161	1543573	38036	3.09	3.09	23218440	512.5	0.95	41466	58386	
SLV 10	500	-80741	5073	3735	-2045816	245085	1.85	1.85	16629584	512.5	0.7	30669	47255	
SLV 11	0	-107242	-2327	1271	-3534966	-117491	2.46	2.46	20317596	512.5	0.83	35969	53012	
SLV 11	500	-57750	-16403	3312	1930559	276170	1.33	1.33	12721279	512.5	0.6	26071	41621	
SLV 12	0	-103763	-5834	1218	-4631035	-114081	2.38	2.38	19883308	512.5	0.81	35273	52293	
SLV 12	500	-55321	-20372	3132	2385842	265423	1.27	1.27	12269898	512.5	0.59	25585	40980	
SLV 13	0	-120856	15136	2063	1953298	-128808	2.77	2.77	21872122	512.5	0.89	38692	55739	
SLV 13	500	-65670	787	816	501098	167382	1.51	1.51	14141951	512.5	0.63	27655	43644	
SLV 14	0	-117732	11987	2014	969073	-125746	2.7	2.7	21535822	512.5	0.87	38067	55125	
SLV 14	500	-63489	-2777	655	909924	157732	1.46	1.46	13758485	512.5	0.62	27219	43096	
SLV 15	0	-111567	7294	2476	100916	-174442	2.56	2.56	20836485	512.5	0.85	36834	53893	
SLV 15	500	-58044	-6846	635	1830596	173484	1.33	1.33	12775394	512.5	0.6	26130	41698	
SLV 16	0	-108443	4145	2428	-883309	-171381	2.49	2.49	20464036	512.5	0.83	36209	53258	
SLV 16	500	-55863	-10411	474	2239422	163834	1.28	1.28	12371207	512.5	0.59	25693	41124	

Verifica a pressoflessione fuori piano D.M. 14-01-08 (N.T.C.)
quota 200 Ta 0 Wa 0.19 denominatore 8

comb.	fd	Sa	x	N	M	Mc	c.s.	
SLV 1	11	0.24	25.64	-124081	156098	3683032	23.59	
SLV 2	11	0.24	25.03	-121150	156098	3632712	23.27	
SLV 3	11	0.24	23.77	-115049	156098	3522285	22.56	
SLV 4	11	0.24	23.16	-112118	156098	3466496	22.21	
SLV 5	11	0.24	26.16	-126623	156098	3725225	23.86	
SLV 6	11	0.24	25.49	-123358	156098	3670788	23.52	
SLV 7	11	0.24	19.94	-96517	156098	3139669	20.11	
SLV 8	11	0.24	19.27	-93252	156098	3064930	19.63	
SLV 9	11	0.24	24.71	-119626	156098	3605852	23.1	
SLV 10	11	0.24	24.04	-116362	156098	3546697	22.72	
SLV 11	11	0.24	18.49	-89520	156098	2976780	19.07	
SLV 12	11	0.24	17.82	-86256	156098	2897322	18.56	
SLV 13	11	0.24	20.82	-100760	156098	3233549	20.71	
SLV 14	11	0.24	20.21	-97829	156098	3169107	20.3	
SLV 15	11	0.24	18.95	-91729	156098	3029287	19.41	
SLV 16	11	0.24	18.35	-88798	156098	2959375	18.96	

Verifica dei meccanismi locali di collasso con analisi cinematica lineare
accelerazione limite = 92,39; forza di aggancio al piano = 30

combinazione	N top	N base	V orto	alfa0	M*	e*	a0*	
SLV 1	-89897	-138955	9041	0.183	121.887	0.932	143	
SLV 2	-87715	-135831	8879	0.186	119.685	0.931	145	
SLV 3	-82270	-129666	8860	0.191	114.191	0.929	149	
SLV 4	-80089	-126542	8698	0.194	111.993	0.928	152	
SLV 5	-90438	-143636	6382	0.207	122.434	0.933	161	
SLV 6	-88009	-140157	6202	0.211	119.981	0.932	164	
SLV 7	-65018	-112672	5779	0.244	96.841	0.919	193	
SLV 8	-62589	-109193	5599	0.251	94.407	0.918	199	
SLV 9	-83170	-138206	3915	0.238	115.099	0.929	186	
SLV 10	-80741	-134727	3735	0.243	112.65	0.928	190	
SLV 11	-57750	-107242	3312	0.29	89.567	0.914	230	
SLV 12	-55321	-103763	3132	0.298	87.143	0.913	237	
SLV 13	-65670	-120856	816	0.302	97.494	0.92	239	
SLV 14	-63489	-117732	655	0.309	95.308	0.918	245	
SLV 15	-58044	-111567	635	0.324	89.861	0.915	257	
SLV 16	-55863	-108443	474	0.332	87.684	0.913	264	

Maschio 2
Maschio considerato membratura sismica secondaria
Dati geometrici

X ini.	Y ini.	X fin.	Y fin.	quota i.	quota.s	l	sp.	h netta	h ini.	h fin.	a
142.5	895	142.5	765	L1	L2	130	85	400	500	500	

Materiale: Muratura in pietrame consolidata con iniezioni LC1
f medio 30
tau 0.9
E 24000
G 8053.69
Fattore di confidenza 1.35

Verifica a pressoflessione per azioni non sismiche 4.5.6.2 D.M. 14-01-08 (N.T.C.) gammaM 3

comb.	quota	N	M	p	es1	es2	ea	ev	e ver (cm)	Ft	Fl	Nu (daN)	
1	500	-17108	3033	1	-4.84	2.07	2	0,00	4,77	0,80	1,00	64924	

muratura

comb.	quota	N	M	p	es1	es2	ea	ev	e ver (cm)	Ft	Fl	Nu (daN)	
1	200	-27942	-29463	1	-4.84	2.07	2	0,00	2,39	0,88	0,97	70540	
1	0	-29160	-15591	1	-4.84	2.07	2	0,00	4,77	0,80	0,99	64365	
2	500	-17512	3769	1	-4.91	2.02	2	0,00	4,89	0,79	0,99	64512	
2	200	-28437	-28641	1	-4.91	2.02	2	0,00	2,45	0,88	0,98	70449	
2	0	-29570	-15067	1	-4.91	2.02	2	0,00	4,89	0,79	0,99	64054	
3	500	-19372	4493	1	-4.6	2.51	2	0,00	4,10	0,82	0,99	66859	
3	200	-30704	-30565	1	-4.6	2.51	2	0,00	2,05	0,90	0,98	71634	
3	0	-31451	-16153	1	-4.6	2.51	2	0,00	4,10	0,82	0,99	66405	
4	500	-19767	4066	1	-4.42	2.74	2	0,00	3,68	0,84	1,00	68156	
4	200	-31180	-32212	1	-4.42	2.74	2	0,00	2,00	0,90	0,98	71709	
4	0	-31848	-17142	1	-4.42	2.74	2	0,00	3,68	0,84	0,99	67610	
5	500	-19968	4434	1	-4.45	2.71	2	0,00	3,74	0,83	0,99	67942	
5	200	-31428	-31801	1	-4.45	2.71	2	0,00	2,00	0,90	0,98	71746	
5	0	-32053	-16880	1	-4.45	2.71	2	0,00	3,74	0,83	0,99	67442	
6	500	-19215	3710	1	-4.58	2.49	2	0,00	4,08	0,82	1,00	66963	
6	200	-30515	-32305	1	-4.58	2.49	2	0,00	2,04	0,90	0,97	71543	
6	0	-31295	-17325	1	-4.58	2.49	2	0,00	4,08	0,82	0,99	66381	
7	500	-19618	4446	1	-4.64	2.44	2	0,00	4,20	0,82	0,99	66552	
7	200	-31011	-31483	1	-4.64	2.44	2	0,00	2,10	0,89	0,98	71444	
7	0	-31705	-16801	1	-4.64	2.44	2	0,00	4,20	0,82	0,99	66065	
8	500	-21478	5169	1	-4.39	2.84	2	0,00	3,55	0,84	0,99	68491	
8	200	-33278	-33407	1	-4.39	2.84	2	0,00	2,00	0,90	0,98	71760	
8	0	-33586	-17887	1	-4.39	2.84	2	0,00	3,55	0,84	0,99	68008	
9	500	-21873	4743	1	-4.22	3.05	2	0,00	3,18	0,86	0,99	69634	
9	200	-33754	-35054	1	-4.22	3.05	2	0,00	2,00	0,90	0,98	71699	
9	0	-33983	-18877	1	-4.22	3.05	2	0,00	3,18	0,86	0,99	69066	
10	500	-22074	5111	1	-4.26	3.02	2	0,00	3,24	0,85	0,99	69426	
10	200	-34002	-34643	1	-4.26	3.02	2	0,00	2,00	0,90	0,98	71734	
10	0	-34188	-18615	1	-4.26	3.02	2	0,00	3,24	0,85	0,99	68902	
11	500	-22241	3943	1	-4.84	2.07	2	0,00	4,77	0,80	1,00	64924	
11	200	-36324	-38302	1	-4.84	2.07	2	0,00	2,39	0,88	0,97	70540	
11	0	-37908	-20268	1	-4.84	2.07	2	0,00	4,77	0,80	0,99	64365	
12	500	-22644	4679	1	-4.9	2.03	2	0,00	4,86	0,79	1,00	64606	
12	200	-36820	-37480	1	-4.9	2.03	2	0,00	2,43	0,88	0,98	70470	
12	0	-38318	-19744	1	-4.9	2.03	2	0,00	4,86	0,79	0,99	64125	
13	500	-24505	5402	1	-4.65	2.41	2	0,00	4,24	0,82	0,99	66454	
13	200	-39087	-39404	1	-4.65	2.41	2	0,00	2,12	0,89	0,98	71404	
13	0	-40200	-20830	1	-4.65	2.41	2	0,00	4,24	0,82	0,99	65977	
14	500	-24899	4976	1	-4.5	2.6	2	0,00	3,90	0,83	1,00	67490	
14	200	-39562	-41051	1	-4.5	2.6	2	0,00	2,00	0,90	0,98	71701	
14	0	-40596	-21820	1	-4.5	2.6	2	0,00	3,90	0,83	0,99	66941	
15	500	-25101	5344	1	-4.53	2.58	2	0,00	3,95	0,83	0,99	67325	
15	200	-39810	-40640	1	-4.53	2.58	2	0,00	2,00	0,90	0,98	71730	
15	0	-40801	-21558	1	-4.53	2.58	2	0,00	3,95	0,83	0,99	66813	
16	500	-24347	4619	1	-4.63	2.4	2	0,00	4,23	0,82	1,00	66534	
16	200	-38898	-41144	1	-4.63	2.4	2	0,00	2,11	0,89	0,97	71331	
16	0	-40043	-22003	1	-4.63	2.4	2	0,00	4,23	0,82	0,99	65956	
17	500	-24750	5356	1	-4.69	2.37	2	0,00	4,32	0,81	0,99	66215	
17	200	-39394	-40322	1	-4.69	2.37	2	0,00	2,16	0,89	0,98	71256	
17	0	-40453	-21479	1	-4.69	2.37	2	0,00	4,32	0,81	0,99	65712	
18	500	-26611	6079	1	-4.48	2.69	2	0,00	3,78	0,83	0,99	67804	
18	200	-41661	-42246	1	-4.48	2.69	2	0,00	2,00	0,90	0,98	71742	
18	0	-42335	-22564	1	-4.48	2.69	2	0,00	3,78	0,83	0,99	67306	
19	500	-27005	5653	1	-4.34	2.86	2	0,00	3,48	0,84	0,99	68740	
19	200	-42136	-43893	1	-4.34	2.86	2	0,00	2,00	0,90	0,97	71694	
19	0	-42731	-23554	1	-4.34	2.86	2	0,00	3,48	0,84	0,99	68173	
20	500	-27207	6021	1	-4.37	2.84	2	0,00	3,53	0,84	0,99	68578	
20	200	-42384	-43482	1	-4.37	2.84	2	0,00	2,00	0,90	0,98	71721	
20	0	-42936	-23292	1	-4.37	2.84	2	0,00	3,53	0,84	0,99	68047	

Verifica a taglio con rottura per fessurazione diagonale per azioni non sismiche Circ.617 C8.7.1.5 gammaM 3

comb.	quota	Vd	N	ftd	b	sigma0	Vu	c.s.	
SLU 1	250	-1	-27017	0.33	1.5	2.45	7089	100	
SLU 1	100	-1	-30683	0.33	1.5	2.78	7501	100	
SLU 2	250	-1	-27513	0.33	1.5	2.49	7146	100	
SLU 2	100	-1	-31179	0.33	1.5	2.82	7555	100	
SLU 3	250	-1	-29780	0.33	1.5	2.7	7401	100	
SLU 3	100	-1	-33446	0.33	1.5	3.03	7796	100	
SLU 4	250	-1	-30256	0.33	1.5	2.74	7454	100	
SLU 4	100	-1	-33922	0.33	1.5	3.07	7846	100	
SLU 5	250	-1	-30504	0.33	1.5	2.76	7481	100	
SLU 5	100	-1	-34170	0.33	1.5	3.09	7872	100	
SLU 6	250	-1	-29591	0.33	1.5	2.68	7380	100	
SLU 6	100	-1	-33257	0.33	1.5	3.01	7776	100	
SLU 7	250	-1	-30087	0.33	1.5	2.72	7435	100	
SLU 7	100	-1	-33753	0.33	1.5	3.05	7828	100	
SLU 8	250	-2	-32354	0.33	1.5	2.93	7681	100	
SLU 8	100	-2	-36020	0.33	1.5	3.26	8062	100	
SLU 9	250	-2	-32830	0.33	1.5	2.97	7731	100	
SLU 9	100	-2	-36496	0.33	1.5	3.3	8110	100	
SLU 10	250	-2	-33078	0.33	1.5	2.99	7758	100	
SLU 10	100	-2	-36744	0.33	1.5	3.33	8135	100	
SLU 11	250	-2	-35122	0.33	1.5	3.18	7970	100	
SLU 11	100	-2	-39888	0.33	1.5	3.61	8446	100	
SLU 12	250	-2	-35618	0.33	1.5	3.22	8021	100	
SLU 12	100	-2	-40384	0.33	1.5	3.65	8494	100	
SLU 13	250	-2	-37885	0.33	1.5	3.43	8249	100	
SLU 13	100	-2	-42651	0.33	1.5	3.86	8709	100	
SLU 14	250	-2	-38361	0.33	1.5	3.47	8296	100	
SLU 14	100	-2	-43127	0.33	1.5	3.9	8754	100	
SLU 15	250	-2	-38609	0.33	1.5	3.49	8321	100	
SLU 15	100	-2	-43375	0.33	1.5	3.93	8777	100	
SLU 16	250	-2	-37696	0.33	1.5	3.41	8230	100	
SLU 16	100	-2	-42462	0.33	1.5	3.84	8692	100	
SLU 17	250	-2	-38192	0.33	1.5	3.46	8280	100	
SLU 17	100	-2	-42958	0.33	1.5	3.89	8738	100	
SLU 18	250	-2	-40459	0.33	1.5	3.66	8501	100	
SLU 18	100	-2	-45225	0.33	1.5	4.09	8948	100	
SLU 19	250	-2	-40935	0.33	1.5	3.7	8546	100	
SLU 19	100	-2	-45701	0.33	1.5	4.14	8991	100	

comb.	quota	Vd	N	ftd	b	sigma0	Vu	c.s.	
SLU 20	250	-2	-41183	0.33	1.5	3.73	8570	100	
SLU 20	100	-2	-45949	0.33	1.5	4.16	9014	100	

Verifica a pressoflessione fuori piano D.M. 14-01-08 (N.T.C.)
quota 200 Ta 0.04 Wa 0.19 denominatore 8

comb.	fd	Sa	x	N	M	Mc	c.s.	
SLV 1	11	0.3	30.01	-36846	47911	1013075	21.14	
SLV 2	11	0.3	30.1	-36954	47911	1014422	21.17	
SLV 3	11	0.3	29.72	-36485	47911	1008509	21.05	
SLV 4	11	0.3	29.8	-36593	47911	1009889	21.08	
SLV 5	11	0.3	26.69	-32771	47911	955422	19.94	
SLV 6	11	0.3	26.79	-32892	47911	957323	19.98	
SLV 7	11	0.3	25.71	-31567	47911	935793	19.53	
SLV 8	11	0.3	25.81	-31688	47911	937812	19.57	
SLV 9	11	0.3	23.56	-28923	47911	888550	18.55	
SLV 10	11	0.3	23.66	-29043	47911	890829	18.59	
SLV 11	11	0.3	22.58	-27718	47911	865146	18.06	
SLV 12	11	0.3	22.67	-27839	47911	867543	18.11	
SLV 13	11	0.3	19.56	-24017	47911	785828	16.4	
SLV 14	11	0.3	19.65	-24126	47911	788308	16.45	
SLV 15	11	0.3	19.27	-23656	47911	777487	16.23	
SLV 16	11	0.3	19.36	-23764	47911	779999	16.28	

Verifica dei meccanismi locali di collasso con analisi cinematica lineare
accelerazione limite = 92,39; forza di aggancio al piano = 30

combinazione	N top	N base	V orto	alfa0	M*	e*	a0*	
SLV 1	-24588	-36578	954	0.224	32.721	0.936	174	
SLV 2	-24723	-36673	963	0.223	32.857	0.936	173	
SLV 3	-24396	-36410	960	0.224	32.528	0.935	174	
SLV 4	-24531	-36504	968	0.224	32.664	0.935	174	
SLV 5	-20943	-32976	650	0.252	29.04	0.929	197	
SLV 6	-21093	-33082	659	0.251	29.192	0.929	196	
SLV 7	-20305	-32413	667	0.255	28.397	0.928	200	
SLV 8	-20455	-32519	677	0.254	28.548	0.928	199	
SLV 9	-17634	-29724	395	0.285	25.71	0.922	225	
SLV 10	-17784	-29830	404	0.283	25.86	0.922	223	
SLV 11	-16996	-29161	412	0.289	25.069	0.92	229	
SLV 12	-17146	-29267	421	0.288	25.22	0.921	227	
SLV 13	-13557	-25738	103	0.34	21.631	0.911	271	
SLV 14	-13692	-25833	112	0.338	21.765	0.912	270	
SLV 15	-13366	-25569	108	0.343	21.44	0.911	273	
SLV 16	-13501	-25664	117	0.34	21.574	0.911	271	

Maschio 3
Dati geometrici

X ini.	Y ini.	X fin.	Y fin.	quota i.	quota.s	l	sp.	h netta	h ini.	h fin.	a
142.5	1315	142.5	995	L1	L2	320	85	400	500	500	

Materiale: Muratura in pietrame consolidata con iniezioni LC1
f medio 30
tau 0.9
E 24000
G 8053.69
Fattore di confidenza 1.35

Verifica a pressoflessione per azioni non sismiche 4.5.6.2 D.M. 14-01-08 (N.T.C.) gammaM 3

comb.	quota	N	M	p	es1	es2	ea	ev	e ver (cm)	Ft	Fl	Nu (daN)	
1	500	-46183	584225	1	-5.14	1.89	2	0,00	5,25	0,78	0,88	137597	
1	200	-79326	-271315	1	-5.14	1.89	2	0,00	2,63	0,88	0,97	170492	
1	0	-76846	673997	1	-5.14	1.89	2	0,00	5,25	0,78	0,91	143534	
2	500	-47193	604533	1	-5.16	1.85	2	0,00	5,32	0,78	0,88	136933	
2	200	-80608	-275805	1	-5.16	1.85	2	0,00	2,66	0,87	0,97	170259	
2	0	-77832	673325	1	-5.16	1.85	2	0,00	5,32	0,78	0,92	143278	
3	500	-52030	646256	1	-4.87	2.3	2	0,00	4,58	0,80	0,88	142332	
3	200	-87039	-341476	1	-4.87	2.3	2	0,00	2,29	0,89	0,96	172026	
3	0	-82630	680114	1	-4.87	2.3	2	0,00	4,58	0,80	0,92	148948	
4	500	-53093	643830	1	-4.74	2.51	2	0,00	4,22	0,82	0,88	145092	
4	200	-88514	-365131	1	-4.74	2.51	2	0,00	2,11	0,89	0,96	172924	
4	0	-83701	683696	1	-4.74	2.51	2	0,00	4,22	0,82	0,92	151443	
5	500	-53598	653984	1	-4.75	2.49	2	0,00	4,26	0,82	0,88	144723	
5	200	-89155	-367376	1	-4.75	2.49	2	0,00	2,13	0,89	0,96	172796	
5	0	-84194	683360	1	-4.75	2.49	2	0,00	4,26	0,82	0,92	151266	
6	500	-51913	631208	1	-4.9	2.27	2	0,00	4,63	0,80	0,88	142407	
6	200	-86932	-337899	1	-4.9	2.27	2	0,00	2,31	0,89	0,96	171905	
6	0	-82581	702358	1	-4.9	2.27	2	0,00	4,63	0,80	0,92	148163	
7	500	-52924	651516	1	-4.93	2.23	2	0,00	4,70	0,80	0,88	141715	
7	200	-88214	-342389	1	-4.93	2.23	2	0,00	2,35	0,89	0,96	171667	
7	0	-83567	701686	1	-4.93	2.23	2	0,00	4,70	0,80	0,92	147860	
8	500	-57761	693239	1	-4.69	2.6	2	0,00	4,08	0,82	0,88	146210	
8	200	-94645	-408060	1	-4.69	2.6	2	0,00	2,04	0,90	0,96	173094	
8	0	-88365	708476	1	-4.69	2.6	2	0,00	4,08	0,82	0,92	152643	
9	500	-58823	690813	1	-4.57	2.79	2	0,00	3,78	0,83	0,89	148650	
9	200	-96120	-431715	1	-4.57	2.79	2	0,00	2,00	0,90	0,96	173075	
9	0	-89436	712058	1	-4.57	2.79	2	0,00	3,78	0,83	0,92	154841	
10	500	-59328	700967	1	-4.58	2.77	2	0,00	3,81	0,83	0,88	148283	
10	200	-96761	-433960	1	-4.58	2.77	2	0,00	2,00	0,90	0,96	173087	
10	0	-89929	711722	1	-4.58	2.77	2	0,00	3,81	0,83	0,92	154656	
11	500	-60038	759492	1	-5.14	1.89	2	0,00	5,25	0,78	0,88	137597	
11	200	-103124	-352709	1	-5.14	1.89	2	0,00	2,63	0,88	0,97	170492	
11	0	-99900	876196	1	-5.14	1.89	2	0,00	5,25	0,78	0,91	143534	
12	500	-61048	779800	1	-5.16	1.86	2	0,00	5,30	0,78	0,88	137084	
12	200	-104406	-357199	1	-5.16	1.86	2	0,00	2,65	0,87	0,97	170312	
12	0	-100885	875524	1	-5.16	1.86	2	0,00	5,30	0,78	0,92	143336	

muratura

comb.	quota	N	M	p	es1	es2	ea	ev	e ver (cm)	Ft	Fl	Nu (daN)	
13	500	-65885	821523	1	-4.93	2.21	2	0,00	4,72	0,80	0,88	141334	
13	200	-110837	-422870	1	-4.93	2.21	2	0,00	2,36	0,89	0,96	171710	
13	0	-105684	882313	1	-4.93	2.21	2	0,00	4,72	0,80	0,92	147798	
14	500	-66948	819097	1	-4.82	2.38	2	0,00	4,44	0,81	0,88	143535	
14	200	-112312	-446526	1	-4.82	2.38	2	0,00	2,22	0,89	0,96	172431	
14	0	-106755	885895	1	-4.82	2.38	2	0,00	4,44	0,81	0,92	149790	
15	500	-67453	829251	1	-4.83	2.36	2	0,00	4,47	0,81	0,88	143254	
15	200	-112953	-448770	1	-4.83	2.36	2	0,00	2,23	0,89	0,96	172333	
15	0	-107248	885559	1	-4.83	2.36	2	0,00	4,47	0,81	0,92	149660	
16	500	-65768	806476	1	-4.95	2.19	2	0,00	4,76	0,80	0,88	141390	
16	200	-110730	-419293	1	-4.95	2.19	2	0,00	2,38	0,88	0,96	171613	
16	0	-105635	904557	1	-4.95	2.19	2	0,00	4,76	0,80	0,92	147183	
17	500	-66779	826783	1	-4.97	2.16	2	0,00	4,81	0,80	0,88	140858	
17	200	-112012	-423783	1	-4.97	2.16	2	0,00	2,41	0,88	0,96	171429	
17	0	-106621	903885	1	-4.97	2.16	2	0,00	4,81	0,80	0,92	146955	
18	500	-71615	868507	1	-4.77	2.46	2	0,00	4,31	0,81	0,88	144536	
18	200	-118443	-489455	1	-4.77	2.46	2	0,00	2,16	0,89	0,96	172608	
18	0	-111419	910675	1	-4.77	2.46	2	0,00	4,31	0,81	0,92	150855	
19	500	-72678	866080	1	-4.67	2.62	2	0,00	4,06	0,82	0,88	146528	
19	200	-119917	-513110	1	-4.67	2.62	2	0,00	2,03	0,90	0,96	173249	
19	0	-112490	914257	1	-4.67	2.62	2	0,00	4,06	0,82	0,92	152653	
20	500	-73183	876234	1	-4.69	2.6	2	0,00	4,09	0,82	0,88	146246	
20	200	-120558	-515355	1	-4.69	2.6	2	0,00	2,04	0,90	0,96	173153	
20	0	-112983	913921	1	-4.69	2.6	2	0,00	4,09	0,82	0,92	152517	

Verifica a taglio con rottura per fessurazione diagonale per azioni non sismiche Circ.617 C8.7.1.5 gammaM 3

comb.	quota	Vd	N	ftd	b	sigma0	Vu	c.s.	
SLU 1	250	2788	-77076	0.33	1.25	2.83	22357	8.02	
SLU 1	100	2783	-86243	0.33	1.25	3.17	23517	8.45	
SLU 2	250	2721	-78359	0.33	1.25	2.88	22523	8.28	
SLU 2	100	2716	-87527	0.33	1.25	3.22	23675	8.72	
SLU 3	250	2533	-84788	0.33	1.25	3.12	23337	9.21	
SLU 3	100	2528	-93966	0.33	1.25	3.45	24451	9.67	
SLU 4	250	2520	-86261	0.33	1.25	3.17	23519	9.33	
SLU 4	100	2514	-95442	0.33	1.25	3.51	24626	9.79	
SLU 5	250	2486	-86902	0.33	1.25	3.19	23598	9.49	
SLU 5	100	2481	-96084	0.33	1.25	3.53	24701	9.96	
SLU 6	250	2750	-84681	0.33	1.25	3.11	23323	8.48	
SLU 6	100	2744	-93857	0.33	1.25	3.45	24438	8.91	
SLU 7	250	2683	-85964	0.33	1.25	3.16	23483	8.75	
SLU 7	100	2678	-95141	0.33	1.25	3.5	24590	9.18	
SLU 8	250	2495	-92393	0.33	1.25	3.4	24264	9.72	
SLU 8	100	2490	-101580	0.33	1.25	3.73	25339	10.18	
SLU 9	250	2482	-93866	0.33	1.25	3.45	24439	9.85	
SLU 9	100	2476	-103056	0.33	1.25	3.79	25507	10.3	
SLU 10	250	2448	-94507	0.33	1.25	3.47	24515	10.01	
SLU 10	100	2442	-103698	0.33	1.25	3.81	25580	10.47	
SLU 11	250	3624	-100198	0.33	1.25	3.68	25180	6.95	
SLU 11	100	3618	-112116	0.33	1.25	4.12	26518	7.33	
SLU 12	250	3557	-101481	0.33	1.25	3.73	25327	7.12	
SLU 12	100	3551	-113400	0.33	1.25	4.17	26658	7.51	
SLU 13	250	3370	-107911	0.33	1.25	3.97	26053	7.73	
SLU 13	100	3363	-119839	0.33	1.25	4.41	27350	8.13	
SLU 14	250	3356	-109383	0.33	1.25	4.02	26217	7.81	
SLU 14	100	3349	-121315	0.33	1.25	4.46	27506	8.21	
SLU 15	250	3323	-110025	0.33	1.25	4.05	26288	7.91	
SLU 15	100	3316	-121957	0.33	1.25	4.48	27573	8.32	
SLU 16	250	3586	-107803	0.33	1.25	3.96	26041	7.26	
SLU 16	100	3579	-119730	0.33	1.25	4.4	27338	7.64	
SLU 17	250	3519	-109086	0.33	1.25	4.01	26184	7.44	
SLU 17	100	3512	-121013	0.33	1.25	4.45	27474	7.82	
SLU 18	250	3332	-115516	0.33	1.25	4.25	26887	8.07	
SLU 18	100	3324	-127453	0.33	1.25	4.69	28146	8.47	
SLU 19	250	3318	-116989	0.33	1.25	4.3	27045	8.15	
SLU 19	100	3311	-128929	0.33	1.25	4.74	28297	8.55	
SLU 20	250	3285	-117630	0.33	1.25	4.32	27114	8.25	
SLU 20	100	3277	-129571	0.33	1.25	4.76	28363	8.65	

Verifica a pressoflessione nel piano (7.8.2.2) e taglio con rottura per fessurazione diagonale (C8.7.1.5), gammaM = 2

comb.	quota	N	V par	V orto	M	M orto	N/(l*sp)	N/(l'*sp)	Mu	l'	fvd	Vt scorr.	Vt fess.diag.	
SLV 1	0	-85512	1455	-1376	1098197	117166	3.14	3.14	9127535	320	0.96	26169	29371	
SLV 1	500	-52257	2326	6607	1371108	322502	1.92	1.92	6660239	320	0.72	19518	23942	
SLV 2	0	-87158	815	-1363	851834	114869	3.2	3.2	9213909	320	0.97	26498	29614	
SLV 2	500	-55309	971	6872	1424772	339606	2.03	2.03	6944131	320	0.74	20128	24490	
SLV 3	0	-91250	-128	-1141	460584	67820	3.35	3.35	9413896	320	1	27317	30209	
SLV 3	500	-61584	966	7527	1156807	367873	2.26	2.26	7491294	320	0.79	21384	25581	
SLV 4	0	-92896	-768	-1128	214220	65522	3.42	3.42	9488500	320	1.02	27646	30446	
SLV 4	500	-64637	-388	7792	1210471	384978	2.38	2.38	7739719	320	0.81	21994	26095	
SLV 5	0	-73709	3315	-757	1883123	110154	2.71	2.71	8409586	320	0.88	23809	27567	
SLV 5	500	-36258	4191	3203	1153752	181635	1.33	1.33	4982435	320	0.6	16318	20832	
SLV 6	0	-75543	2602	-743	1608764	107595	2.78	2.78	8532521	320	0.89	24175	27855	
SLV 6	500	-39657	2682	3499	1213514	200683	1.46	1.46	5365601	320	0.62	16998	21530	
SLV 7	0	-92836	-1960	26	-242256	-54335	3.41	3.41	9485823	320	1.02	27634	30437	
SLV 7	500	-67350	-341	6270	439415	332873	2.48	2.48	7950789	320	0.83	22537	26544	
SLV 8	0	-94670	-2672	40	-516615	-56894	3.48	3.48	9565068	320	1.03	28001	30698	
SLV 8	500	-70749	-1850	6565	499177	351922	2.6	2.6	8202295	320	0.85	23217	27096	
SLV 9	0	-69411	3296	9	1906304	54684	2.55	2.55	8105024	320	0.84	22949	26880	
SLV 9	500	-32021	4364	1219	755759	107096	1.18	1.18	4484699	320	0.57	15471	19927	
SLV 10	0	-71245	2583	23	1631945	52126	2.62	2.62	8237777	320	0.86	23316	27175	
SLV 10	500	-35420	2855	1514	815521	126145	1.3	1.3	4885806	320	0.59	16151	20656	
SLV 11	0	-88538	-1979	792	-219075	-109805	3.26	3.26	9283667	320	0.98	26774	29816	
SLV 11	500	-63113	-169	4286	41422	258335	2.32	2.32	7617156	320	0.8	21689	25840	
SLV 12	0	-90372	-2692	807	-493434	-112363	3.32	3.32	9372729	320	1	27141	30083	
SLV 12	500	-66512	-1678	4581	101184	277383	2.45	2.45	7886603	320	0.82	22369	26406	
SLV 13	0	-71185	1391	1178	1175468	-67732	2.62	2.62	8233471	320	0.86	23304	27166	
SLV 13	500	-38133	2902	-8	44465	74040	1.4	1.4	5195622	320	0.61	16693	21220	
SLV 14	0	-72831	751	1191	929105	-70029	2.68	2.68	8349233	320	0.87	23633	27428	
SLV 14	500	-41186	1547	257	98129	91145	1.51	1.51	5533217	320	0.64	17304	21837	

comb.	quota	N	V par	V orto	M	M orto	N/(l*sp)	N/(l'*sp)	Mu	l'	fvd	Vt scorr.	Vt fess.diag.	
SLV 15	0	-76923	-192	1413	537855	-117078	2.83	2.83	8622237	320	0.9	24451	28070	
SLV 15	500	-47461	1542	912	-169836	119412	1.74	1.74	6190780	320	0.68	18559	23054	
SLV 16	0	-78569	-832	1426	291491	-119376	2.89	2.89	8726229	320	0.91	24781	28324	
SLV 16	500	-50513	187	1177	-116172	136516	1.86	1.86	6492907	320	0.7	19169	23623	

Verifica a pressoflessione fuori piano D.M. 14-01-08 (N.T.C.)
quota 200 Ta 0 Wa 0.19 denominatore 8

comb.	fd	Sa	x	N	M	Mc	c.s.	
SLV 1	11	0.24	27.3	-82515	97466	2380448	24.42	
SLV 2	11	0.24	28.57	-86343	97466	2436193	25	
SLV 3	11	0.24	30.92	-93457	97466	2526921	25.93	
SLV 4	11	0.24	32.19	-97284	97466	2568809	26.36	
SLV 5	11	0.24	22.16	-66967	97466	2104161	21.59	
SLV 6	11	0.24	23.57	-71229	97466	2187862	22.45	
SLV 7	11	0.24	34.23	-103438	97466	2625993	26.94	
SLV 8	11	0.24	35.64	-107701	97466	2658256	27.27	
SLV 9	11	0.24	21.43	-64768	97466	2058621	21.12	
SLV 10	11	0.24	22.84	-69030	97466	2145425	22.01	
SLV 11	11	0.24	33.5	-101239	97466	2606995	26.75	
SLV 12	11	0.24	34.91	-105501	97466	2642360	27.11	
SLV 13	11	0.24	24.88	-75184	97466	2260143	23.19	
SLV 14	11	0.24	26.14	-79012	97466	2325172	23.86	
SLV 15	11	0.24	28.5	-86126	97466	2433157	24.96	
SLV 16	11	0.24	29.76	-89953	97466	2484329	25.49	

Verifica dei meccanismi locali di collasso con analisi cinematica lineare
accelerazione limite = 92,39; forza di aggancio al piano = 30

combinazione	N top	N base	V orto	alfa0	M*	e*	a0*	
SLV 1	-52257	-85512	6607	0.173	72.195	0.93	135	
SLV 2	-55309	-87158	6872	0.166	75.275	0.932	129	
SLV 3	-61584	-91250	7527	0.152	81.617	0.936	118	
SLV 4	-64637	-92896	7792	0.146	84.705	0.938	113	
SLV 5	-36258	-73709	3203	0.265	56.124	0.915	211	
SLV 6	-39657	-75543	3499	0.249	59.525	0.918	197	
SLV 7	-67350	-92836	6270	0.164	87.452	0.94	127	
SLV 8	-70749	-94670	6565	0.158	90.895	0.942	122	
SLV 9	-32021	-69411	1219	0.326	51.901	0.91	260	
SLV 10	-35420	-71245	1514	0.304	55.287	0.914	242	
SLV 11	-63113	-88538	4286	0.194	83.163	0.937	150	
SLV 12	-66512	-90372	4581	0.186	86.604	0.939	144	
SLV 13	-38133	-71185	-8	0.323	57.999	0.917	256	
SLV 14	-41186	-72831	257	0.306	61.057	0.92	242	
SLV 15	-47461	-76923	912	0.274	67.363	0.926	215	
SLV 16	-50513	-78569	1177	0.261	70.437	0.928	205	

Maschio 4
Maschio considerato membratura sismica secondaria
Dati geometrici

X ini.	Y ini.	X fin.	Y fin.	quota i.	quota.s	l	sp.	h netta	h ini.	h fin.	a
142.5	1522.5	142.5	1435	L1	L2	87.5	85	400	500	500	

Materiale: Muratura in pietrame consolidata con iniezioni LC1
f medio 30
tau 0.9
E 24000
G 8053.69
Fattore di confidenza 1.35

Verifica a pressoflessione per azioni non sismiche 4.5.6.2 D.M. 14-01-08 (N.T.C.) gammaM 3

comb.	quota	N	M	p	es1	es2	ea	ev	e ver (cm)	Ft	Fl	Nu (daN)	
1	500	-11694	-15684	1	-5.14	2.04	2	0,00	5,10	0,78	0,95	41155	
1	200	-18469	111319	1	-5.14	2.04	2	0,00	2,55	0,88	0,79	37982	
1	0	-19417	-36965	1	-5.14	2.04	2	0,00	5,10	0,78	0,93	40288	
2	500	-11906	-15811	1	-5.16	2	2	0,00	5,16	0,78	0,95	41062	
2	200	-18742	113648	1	-5.16	2	2	0,00	2,58	0,88	0,78	37873	
2	0	-19639	-36825	1	-5.16	2	2	0,00	5,16	0,78	0,93	40221	
3	500	-13039	-14842	1	-4.87	2.51	2	0,00	4,37	0,81	0,96	42891	
3	200	-20256	131293	1	-4.87	2.51	2	0,00	2,18	0,89	0,77	37769	
3	0	-20866	-32347	1	-4.87	2.51	2	0,00	4,37	0,81	0,94	42234	
4	500	-13312	-14299	1	-4.74	2.74	2	0,00	4,00	0,82	0,96	43709	
4	200	-20632	136526	1	-4.74	2.74	2	0,00	2,00	0,90	0,76	37815	
4	0	-21171	-30568	1	-4.74	2.74	2	0,00	4,00	0,82	0,95	43110	
5	500	-13418	-14363	1	-4.75	2.72	2	0,00	4,03	0,82	0,96	43647	
5	200	-20768	137690	1	-4.75	2.72	2	0,00	2,02	0,90	0,76	37766	
5	0	-21282	-30498	1	-4.75	2.72	2	0,00	4,03	0,82	0,95	43061	
6	500	-13094	-14963	1	-4.89	2.46	2	0,00	4,43	0,81	0,96	42770	
6	200	-20271	129725	1	-4.89	2.46	2	0,00	2,21	0,89	0,77	37866	
6	0	-20890	-33706	1	-4.89	2.46	2	0,00	4,43	0,81	0,94	42022	
7	500	-13306	-15090	1	-4.91	2.42	2	0,00	4,49	0,81	0,96	42661	
7	200	-20545	132055	1	-4.91	2.42	2	0,00	2,24	0,89	0,77	37768	
7	0	-21112	-33566	1	-4.91	2.42	2	0,00	4,49	0,81	0,94	41938	
8	500	-14438	-14121	1	-4.67	2.85	2	0,00	3,83	0,83	0,97	44202	
8	200	-22059	149700	1	-4.67	2.85	2	0,00	2,00	0,90	0,76	37516	
8	0	-22340	-29088	1	-4.67	2.85	2	0,00	3,83	0,83	0,95	43673	
9	500	-14712	-13579	1	-4.55	3.05	2	0,00	3,50	0,84	0,97	44924	
9	200	-22434	154932	1	-4.55	3.05	2	0,00	2,00	0,90	0,75	37305	
9	0	-22644	-27308	1	-4.55	3.05	2	0,00	3,50	0,84	0,96	44455	
10	500	-14817	-13642	1	-4.57	3.03	2	0,00	3,54	0,84	0,97	44859	
10	200	-22571	156097	1	-4.57	3.03	2	0,00	2,00	0,90	0,75	37288	
10	0	-22755	-27238	1	-4.57	3.03	2	0,00	3,54	0,84	0,96	44402	
11	500	-15203	-20389	1	-5.14	2.04	2	0,00	5,10	0,78	0,95	41155	
11	200	-24009	144714	1	-5.14	2.04	2	0,00	2,55	0,88	0,79	37982	

muratura

comb.	quota	N	M	p	es1	es2	ea	ev	e ver (cm)	Ft	Fl	Nu (daN)	
11	0	-25242	-48055	1	-5.14	2.04	2	0,00	5,10	0,78	0,93	40288	
12	500	-15415	-20516	1	-5.16	2.01	2	0,00	5,15	0,78	0,95	41083	
12	200	-24283	147044	1	-5.16	2.01	2	0,00	2,57	0,88	0,78	37897	
12	0	-25464	-47915	1	-5.16	2.01	2	0,00	5,15	0,78	0,93	40236	
13	500	-16547	-19547	1	-4.93	2.41	2	0,00	4,52	0,81	0,96	42521	
13	200	-25797	164689	1	-4.93	2.41	2	0,00	2,26	0,89	0,77	37818	
13	0	-26692	-43437	1	-4.93	2.41	2	0,00	4,52	0,81	0,94	41815	
14	500	-16820	-19004	1	-4.82	2.59	2	0,00	4,23	0,82	0,96	43173	
14	200	-26172	169921	1	-4.82	2.59	2	0,00	2,11	0,89	0,77	37857	
14	0	-26996	-41658	1	-4.82	2.59	2	0,00	4,23	0,82	0,94	42510	
15	500	-16926	-19068	1	-4.83	2.58	2	0,00	4,26	0,82	0,96	43127	
15	200	-26309	171086	1	-4.83	2.58	2	0,00	2,13	0,89	0,77	37818	
15	0	-27107	-41587	1	-4.83	2.58	2	0,00	4,26	0,82	0,95	42474	
16	500	-16602	-19668	1	-4.94	2.37	2	0,00	4,57	0,80	0,96	42427	
16	200	-25811	163121	1	-4.94	2.37	2	0,00	2,28	0,89	0,77	37894	
16	0	-26715	-44795	1	-4.94	2.37	2	0,00	4,57	0,80	0,94	41650	
17	500	-16814	-19795	1	-4.96	2.34	2	0,00	4,62	0,80	0,96	42345	
17	200	-26085	165450	1	-4.96	2.34	2	0,00	2,31	0,89	0,77	37817	
17	0	-26937	-44655	1	-4.96	2.34	2	0,00	4,62	0,80	0,94	41588	
18	500	-17946	-18826	1	-4.76	2.69	2	0,00	4,08	0,82	0,96	43601	
18	200	-27599	183095	1	-4.76	2.69	2	0,00	2,04	0,90	0,76	37727	
18	0	-28165	-40177	1	-4.76	2.69	2	0,00	4,08	0,82	0,95	42992	
19	500	-18220	-18284	1	-4.67	2.86	2	0,00	3,81	0,83	0,96	44191	
19	200	-27974	188328	1	-4.67	2.86	2	0,00	2,00	0,90	0,76	37612	
19	0	-28469	-38398	1	-4.67	2.86	2	0,00	3,81	0,83	0,95	43626	
20	500	-18326	-18348	1	-4.68	2.84	2	0,00	3,84	0,83	0,96	44143	
20	200	-28111	189492	1	-4.68	2.84	2	0,00	2,00	0,90	0,76	37597	
20	0	-28580	-38328	1	-4.68	2.84	2	0,00	3,84	0,83	0,95	43588	

Verifica a taglio con rottura per fessurazione diagonale per azioni non sismiche Circ.617 C8.7.1.5 gammaM 3

comb.	quota	Vd	N	ftd	b	sigma0	Vu	c.s.	
SLU 1	250	-34	-17835	0.33	1.5	2.4	4731	100	
SLU 1	100	79	-20432	0.33	1.5	2.75	5024	63.64	
SLU 2	250	-35	-18108	0.33	1.5	2.43	4763	100	
SLU 2	100	81	-20706	0.33	1.5	2.78	5054	62.72	
SLU 3	250	-38	-19620	0.33	1.5	2.64	4935	100	
SLU 3	100	85	-22232	0.33	1.5	2.99	5218	61.55	
SLU 4	250	-38	-19994	0.33	1.5	2.69	4976	100	
SLU 4	100	85	-22612	0.33	1.5	3.04	5258	61.9	
SLU 5	250	-39	-20131	0.33	1.5	2.71	4991	100	
SLU 5	100	86	-22749	0.33	1.5	3.06	5272	61.48	
SLU 6	250	-38	-19635	0.33	1.5	2.64	4936	100	
SLU 6	100	84	-22249	0.33	1.5	2.99	5220	61.78	
SLU 7	250	-39	-19908	0.33	1.5	2.68	4967	100	
SLU 7	100	86	-22523	0.33	1.5	3.03	5249	60.95	
SLU 8	250	-42	-21420	0.33	1.5	2.88	5132	100	
SLU 8	100	90	-24049	0.33	1.5	3.23	5407	59.87	
SLU 9	250	-42	-21795	0.33	1.5	2.93	5172	100	
SLU 9	100	90	-24429	0.33	1.5	3.28	5445	60.18	
SLU 10	250	-42	-21931	0.33	1.5	2.95	5186	100	
SLU 10	100	91	-24566	0.33	1.5	3.3	5459	59.8	
SLU 11	250	-45	-23185	0.33	1.5	3.12	5318	100	
SLU 11	100	103	-26562	0.33	1.5	3.57	5657	55.11	
SLU 12	250	-46	-23458	0.33	1.5	3.15	5346	100	
SLU 12	100	104	-26836	0.33	1.5	3.61	5683	54.51	
SLU 13	250	-48	-24970	0.33	1.5	3.36	5500	100	
SLU 13	100	108	-28362	0.33	1.5	3.81	5829	53.75	
SLU 14	250	-49	-25345	0.33	1.5	3.41	5537	100	
SLU 14	100	109	-28742	0.33	1.5	3.86	5865	53.99	
SLU 15	250	-49	-25482	0.33	1.5	3.43	5551	100	
SLU 15	100	109	-28879	0.33	1.5	3.88	5878	53.71	
SLU 16	250	-48	-24985	0.33	1.5	3.36	5501	100	
SLU 16	100	108	-28379	0.33	1.5	3.82	5831	53.9	
SLU 17	250	-49	-25259	0.33	1.5	3.4	5528	100	
SLU 17	100	110	-28653	0.33	1.5	3.85	5857	53.34	
SLU 18	250	-52	-26771	0.33	1.5	3.6	5677	100	
SLU 18	100	114	-30179	0.33	1.5	4.06	5999	52.62	
SLU 19	250	-52	-27145	0.33	1.5	3.65	5713	100	
SLU 19	100	114	-30559	0.33	1.5	4.11	6034	52.85	
SLU 20	250	-53	-27282	0.33	1.5	3.67	5726	100	
SLU 20	100	115	-30696	0.33	1.5	4.13	6046	52.59	

Verifica a pressoflessione fuori piano D.M. 14-01-08 (N.T.C.)
quota 200 Ta 0.04 Wa 0.19 denominatore 8

comb.	fd	Sa	x	N	M	Mc	c.s.	
SLV 1	11	0.3	19.44	-16062	32248	526548	16.33	
SLV 2	11	0.3	21.06	-17404	32248	556393	17.25	
SLV 3	11	0.3	23.13	-19114	32248	591299	18.34	
SLV 4	11	0.3	24.75	-20455	32248	616191	19.11	
SLV 5	11	0.3	16.6	-13716	32248	469111	14.55	
SLV 6	11	0.3	18.41	-15210	32248	506450	15.7	
SLV 7	11	0.3	28.91	-23889	32248	669997	20.78	
SLV 8	11	0.3	30.72	-25383	32248	688949	21.36	
SLV 9	11	0.3	17.94	-14823	32248	497026	15.41	
SLV 10	11	0.3	19.74	-16316	32248	532366	16.51	
SLV 11	11	0.3	30.25	-24996	32248	684294	21.22	
SLV 12	11	0.3	32.05	-26489	32248	701246	21.75	
SLV 13	11	0.3	23.9	-19750	32248	603371	18.71	
SLV 14	11	0.3	25.52	-21091	32248	627231	19.45	
SLV 15	11	0.3	27.59	-22802	32248	654504	20.3	
SLV 16	11	0.3	29.22	-24143	32248	673410	20.88	

Verifica dei meccanismi locali di collasso con analisi cinematica lineare
accelerazione limite = 92,39; forza di aggancio al piano = 30

combinazione	N top	N base	V orto	alfa0	M*	e*	a0*	
SLV 1	-11155	-17675	1569	0.204	16.588	0.919	161	
SLV 2	-11602	-18667	1566	0.201	17.036	0.921	158	
SLV 3	-12283	-19471	1605	0.194	17.72	0.923	153	

combinazione	N top	N base	V orto	alfa0	M*	e*	a0*	
SLV 4	-12729	-20464	1601	0.192	18.17	0.925	151	
SLV 5	-10520	-16698	1357	0.223	15.952	0.917	177	
SLV 6	-11018	-17804	1353	0.22	16.45	0.919	174	
SLV 7	-14279	-22688	1474	0.192	19.731	0.93	150	
SLV 8	-14776	-23794	1470	0.189	20.233	0.931	148	
SLV 9	-11126	-17706	1210	0.229	16.559	0.919	181	
SLV 10	-11623	-18812	1206	0.225	17.058	0.921	177	
SLV 11	-14884	-23696	1327	0.197	20.342	0.931	154	
SLV 12	-15382	-24802	1323	0.195	20.844	0.933	152	
SLV 13	-13173	-21035	1079	0.221	18.616	0.926	174	
SLV 14	-13619	-22028	1076	0.219	19.066	0.928	171	
SLV 15	-14300	-22832	1115	0.212	19.753	0.93	166	
SLV 16	-14747	-23825	1111	0.21	20.203	0.931	164	

Maschio 5
Maschio considerato membratura sismica secondaria
Dati geometrici

X ini.	Y ini.	X fin.	Y fin.	quota i.	quota.s	l	sp.	h netta	h ini.	h fin.	a
142.5	142.5	240	142.5	L1	L2	97.5	85	400	500	500	

Materiale: Muratura in pietrame consolidata con iniezioni LC1
f medio 30
tau 0.9
E 24000
G 8053.69
Fattore di confidenza 1.35

Verifica a pressoflessione per azioni non sismiche 4.5.6.2 D.M. 14-01-08 (N.T.C.) gammaM 3

comb.	quota	N	M	p	es1	es2	ea	ev	e ver (cm)	Ft	Fl	Nu (daN)	
1	500	-10358	-30415	1	-7.16	0	2	0,00	9,16	0,66	0,91	36987	
1	200	-16552	128606	1	-7.16	0	2	0,00	4,58	0,80	0,75	37068	
1	0	-19377	-51257	1	-7.16	0	2	0,00	9,16	0,66	0,92	37368	
2	500	-10580	-30549	1	-7.16	0	2	0,00	9,16	0,66	0,91	37049	
2	200	-16825	131977	1	-7.16	0	2	0,00	4,58	0,80	0,75	36949	
2	0	-19625	-51469	1	-7.16	0	2	0,00	9,16	0,66	0,92	37395	
3	500	-10948	-32996	1	-7.13	0	2	0,00	9,13	0,67	0,90	36929	
3	200	-17297	132895	1	-7.13	0	2	0,00	4,56	0,80	0,75	37234	
3	0	-20146	-61830	1	-7.13	0	2	0,00	9,13	0,67	0,90	36857	
4	500	-10884	-33911	1	-7.11	0	2	0,00	9,11	0,67	0,90	36817	
4	200	-17227	129917	1	-7.11	0	2	0,00	4,56	0,80	0,76	37472	
4	0	-20121	-66058	1	-7.11	0	2	0,00	9,11	0,67	0,89	36598	
5	500	-10995	-33978	1	-7.11	0	2	0,00	9,11	0,67	0,90	36849	
5	200	-17363	131602	1	-7.11	0	2	0,00	4,56	0,80	0,76	37411	
5	0	-20245	-66164	1	-7.11	0	2	0,00	9,11	0,67	0,90	36616	
6	500	-11051	-33552	1	-7.13	0	2	0,00	9,13	0,67	0,90	36893	
6	200	-17369	131210	1	-7.13	0	2	0,00	4,57	0,80	0,76	37432	
6	0	-20195	-62617	1	-7.13	0	2	0,00	9,13	0,67	0,90	36808	
7	500	-11273	-33685	1	-7.14	0	2	0,00	9,14	0,67	0,90	36953	
7	200	-17641	134581	1	-7.14	0	2	0,00	4,57	0,80	0,76	37313	
7	0	-20443	-62829	1	-7.14	0	2	0,00	9,14	0,67	0,90	36841	
8	500	-11641	-36133	1	-7.1	0	2	0,00	9,10	0,67	0,90	36842	
8	200	-18114	135499	1	-7.1	0	2	0,00	4,55	0,80	0,76	37575	
8	0	-20964	-73189	1	-7.1	0	2	0,00	9,10	0,67	0,89	36335	
9	500	-11577	-37048	1	-7.09	0	2	0,00	9,09	0,67	0,90	36736	
9	200	-18043	132521	1	-7.09	0	2	0,00	4,54	0,81	0,76	37804	
9	0	-20939	-77418	1	-7.09	0	2	0,00	9,09	0,67	0,88	36085	
10	500	-11688	-37115	1	-7.09	0	2	0,00	9,09	0,67	0,90	36767	
10	200	-18180	134207	1	-7.09	0	2	0,00	4,54	0,80	0,76	37743	
10	0	-21063	-77524	1	-7.09	0	2	0,00	9,09	0,67	0,88	36105	
11	500	-13465	-39540	1	-7.16	0	2	0,00	9,16	0,66	0,91	36987	
11	200	-21517	167187	1	-7.16	0	2	0,00	4,58	0,80	0,75	37068	
11	0	-25190	-66635	1	-7.16	0	2	0,00	9,16	0,66	0,92	37368	
12	500	-13687	-39673	1	-7.16	0	2	0,00	9,16	0,66	0,91	37035	
12	200	-21790	170559	1	-7.16	0	2	0,00	4,58	0,80	0,75	36976	
12	0	-25438	-66847	1	-7.16	0	2	0,00	9,16	0,66	0,92	37389	
13	500	-14055	-42120	1	-7.13	0	2	0,00	9,13	0,67	0,90	36942	
13	200	-22263	171476	1	-7.13	0	2	0,00	4,57	0,80	0,75	37197	
13	0	-25959	-77207	1	-7.13	0	2	0,00	9,13	0,67	0,90	36971	
14	500	-13991	-43036	1	-7.12	0	2	0,00	9,12	0,67	0,90	36855	
14	200	-22192	168498	1	-7.12	0	2	0,00	4,56	0,80	0,76	37381	
14	0	-25934	-81435	1	-7.12	0	2	0,00	9,12	0,67	0,90	36771	
15	500	-14102	-43102	1	-7.12	0	2	0,00	9,12	0,67	0,90	36879	
15	200	-22329	170184	1	-7.12	0	2	0,00	4,56	0,80	0,76	37335	
15	0	-26058	-81541	1	-7.12	0	2	0,00	9,12	0,67	0,90	36784	
16	500	-14158	-42677	1	-7.14	0	2	0,00	9,14	0,67	0,90	36913	
16	200	-22334	169792	1	-7.14	0	2	0,00	4,57	0,80	0,76	37351	
16	0	-26008	-77994	1	-7.14	0	2	0,00	9,14	0,67	0,90	36934	
17	500	-14380	-42810	1	-7.14	0	2	0,00	9,14	0,67	0,90	36960	
17	200	-22607	173163	1	-7.14	0	2	0,00	4,57	0,80	0,75	37259	
17	0	-26256	-78206	1	-7.14	0	2	0,00	9,14	0,67	0,90	36958	
18	500	-14749	-45257	1	-7.11	0	2	0,00	9,11	0,67	0,90	36873	
18	200	-23079	174081	1	-7.11	0	2	0,00	4,56	0,80	0,76	37466	
18	0	-26777	-88567	1	-7.11	0	2	0,00	9,11	0,67	0,89	36560	
19	500	-14684	-46172	1	-7.1	0	2	0,00	9,10	0,67	0,90	36790	
19	200	-23009	171103	1	-7.1	0	2	0,00	4,55	0,80	0,76	37645	
19	0	-26752	-92795	1	-7.1	0	2	0,00	9,10	0,67	0,89	36365	
20	500	-14795	-46239	1	-7.1	0	2	0,00	9,10	0,67	0,90	36813	
20	200	-23145	172789	1	-7.1	0	2	0,00	4,55	0,80	0,76	37598	
20	0	-26876	-92901	1	-7.1	0	2	0,00	9,10	0,67	0,89	36380	

Verifica a taglio con rottura per fessurazione diagonale per azioni non sismiche Circ.617 C8.7.1.5 gammaM 3

comb.	quota	Vd	N	ftd	b	sigma0	Vu	c.s.	
SLU 1	250	-28	-15891	0.33	1.5	1.92	4786	100	
SLU 1	100	86	-18448	0.33	1.5	2.23	5103	59.38	

muratura

comb.	quota	Vd	N	ftd	b	sigma0	Vu	c.s.	
SLU 2	250	-29	-16163	0.33	1.5	1.95	4820	100	
SLU 2	100	87	-18722	0.33	1.5	2.26	5136	59.19	
SLU 3	250	-30	-16630	0.33	1.5	2.01	4879	100	
SLU 3	100	89	-19206	0.33	1.5	2.32	5193	58.22	
SLU 4	250	-30	-16558	0.33	1.5	2	4870	100	
SLU 4	100	89	-19140	0.33	1.5	2.31	5186	58	
SLU 5	250	-30	-16694	0.33	1.5	2.01	4888	100	
SLU 5	100	90	-19277	0.33	1.5	2.33	5202	57.91	
SLU 6	250	-30	-16704	0.33	1.5	2.02	4889	100	
SLU 6	100	91	-19272	0.33	1.5	2.33	5201	57.23	
SLU 7	250	-31	-16975	0.33	1.5	2.05	4923	100	
SLU 7	100	92	-19546	0.33	1.5	2.36	5233	57.07	
SLU 8	250	-32	-17442	0.33	1.5	2.1	4981	100	
SLU 8	100	94	-20030	0.33	1.5	2.42	5290	56.19	
SLU 9	250	-31	-17370	0.33	1.5	2.1	4972	100	
SLU 9	100	94	-19964	0.33	1.5	2.41	5282	55.99	
SLU 10	250	-31	-17506	0.33	1.5	2.11	4989	100	
SLU 10	100	95	-20101	0.33	1.5	2.43	5298	55.91	
SLU 11	250	-37	-20659	0.33	1.5	2.49	5362	100	
SLU 11	100	112	-23983	0.33	1.5	2.89	5730	51.29	
SLU 12	250	-38	-20930	0.33	1.5	2.53	5393	100	
SLU 12	100	113	-24256	0.33	1.5	2.93	5760	51.17	
SLU 13	250	-39	-21397	0.33	1.5	2.58	5446	100	
SLU 13	100	115	-24740	0.33	1.5	2.99	5811	50.54	
SLU 14	250	-38	-21325	0.33	1.5	2.57	5438	100	
SLU 14	100	115	-24674	0.33	1.5	2.98	5804	50.39	
SLU 15	250	-38	-21461	0.33	1.5	2.59	5454	100	
SLU 15	100	116	-24811	0.33	1.5	2.99	5818	50.33	
SLU 16	250	-38	-21471	0.33	1.5	2.59	5455	100	
SLU 16	100	117	-24807	0.33	1.5	2.99	5818	49.87	
SLU 17	250	-39	-21743	0.33	1.5	2.62	5485	100	
SLU 17	100	117	-25080	0.33	1.5	3.03	5847	49.76	
SLU 18	250	-40	-22209	0.33	1.5	2.68	5537	100	
SLU 18	100	120	-25564	0.33	1.5	3.08	5897	49.18	
SLU 19	250	-39	-22138	0.33	1.5	2.67	5529	100	
SLU 19	100	120	-25498	0.33	1.5	3.08	5891	49.03	
SLU 20	250	-40	-22273	0.33	1.5	2.69	5544	100	
SLU 20	100	121	-25635	0.33	1.5	3.09	5905	48.98	

Verifica a pressoflessione fuori piano D.M. 14-01-08 (N.T.C.)
quota 200 Ta 0.04 Wa 0.19 denominatore 8

comb.	fd	Sa	x	N	M	Mc	c.s.	
SLV 1	11	0.3	22.04	-20294	35933	638876	17.78	
SLV 2	11	0.3	22.87	-21055	35933	654130	18.2	
SLV 3	11	0.3	21.31	-19622	35933	624876	17.39	
SLV 4	11	0.3	22.14	-20383	35933	640685	17.83	
SLV 5	11	0.3	20.48	-18860	35933	608417	16.93	
SLV 6	11	0.3	21.4	-19708	35933	626684	17.44	
SLV 7	11	0.3	18.05	-16619	35933	556351	15.48	
SLV 8	11	0.3	18.97	-17467	35933	576680	16.05	
SLV 9	11	0.3	18.46	-16996	35933	565479	15.74	
SLV 10	11	0.3	19.38	-17843	35933	585461	16.29	
SLV 11	11	0.3	16.02	-14755	35933	508875	14.16	
SLV 12	11	0.3	16.94	-15602	35933	530920	14.78	
SLV 13	11	0.3	15.29	-14080	35933	490747	13.66	
SLV 14	11	0.3	16.12	-14841	35933	511136	14.22	
SLV 15	11	0.3	14.56	-13407	35933	472209	13.14	
SLV 16	11	0.3	15.39	-14168	35933	493154	13.72	

Verifica dei meccanismi locali di collasso con analisi cinematica lineare
accelerazione limite = 92,39; forza di aggancio al piano = 30

combinazione	N top	N base	V orto	alfa0	M*	e*	a0*	
SLV 1	-11720	-22182	1059	0.253	17.773	0.917	200	
SLV 2	-11947	-22292	1070	0.25	18	0.918	198	
SLV 3	-11473	-21194	984	0.26	17.526	0.916	206	
SLV 4	-11700	-21303	995	0.257	17.753	0.917	204	
SLV 5	-11446	-22159	1133	0.251	17.499	0.916	199	
SLV 6	-11699	-22281	1145	0.247	17.752	0.917	196	
SLV 7	-10622	-18864	882	0.277	16.676	0.913	220	
SLV 8	-10875	-18986	894	0.273	16.928	0.914	217	
SLV 9	-10975	-21156	1121	0.256	17.028	0.914	204	
SLV 10	-11228	-21278	1133	0.253	17.281	0.915	201	
SLV 11	-10152	-17861	870	0.283	16.207	0.911	226	
SLV 12	-10404	-17983	882	0.279	16.458	0.912	222	
SLV 13	-10151	-18839	1020	0.272	16.206	0.911	217	
SLV 14	-10377	-18949	1031	0.269	16.432	0.912	214	
SLV 15	-9903	-17851	945	0.281	15.96	0.91	224	
SLV 16	-10130	-17960	956	0.277	16.185	0.911	221	

Maschio 6
Maschio considerato membratura sismica secondaria
Dati geometrici

X ini.	Y ini.	X fin.	Y fin.	quota i.	quota.s	l	sp.	h netta	h ini.	h fin.	a
240	610	142.5	610	L1	L2	97.5	45	400	500	500	

Materiale: Muratura in pietrame consolidata con iniezioni LC1
f medio 30
tau 0.9
E 24000
G 8053.69
Fattore di confidenza 1.35

Verifica a pressoflessione per azioni non sismiche 4.5.6.2 D.M. 14-01-08 (N.T.C.) gammaM 3

comb.	quota	N	M	p	es1	es2	ea	ev	e ver (cm)	Ft	Fl	Nu (daN)	
1	500	-9578	-5747	1	0	0	2	0,00	2,00	0,75	0,98	23905	
1	200	-12889	-25126	1	0	0	2	0,00	2,00	0,75	0,94	22852	
1	0	-15016	-38369	1	0	0	2	0,00	2,00	0,75	0,92	22380	
2	500	-9869	-4471	1	0	0	2	0,00	2,00	0,75	0,99	24019	
2	200	-13229	-26463	1	0	0	2	0,00	2,00	0,75	0,94	22812	
2	0	-15347	-40135	1	0	0	2	0,00	2,00	0,75	0,92	22333	
3	500	-10639	-3951	1	0	0	2	0,00	2,00	0,75	0,99	24083	
3	200	-14097	-27287	1	0	0	2	0,00	2,00	0,75	0,94	22863	
3	0	-16195	-41981	1	0	0	2	0,00	2,00	0,75	0,92	22351	
4	500	-10678	-5004	1	0	0	2	0,00	2,00	0,75	0,99	24007	
4	200	-14130	-26303	1	0	0	2	0,00	2,00	0,75	0,94	22921	
4	0	-16228	-41006	1	0	0	2	0,00	2,00	0,75	0,92	22402	
5	500	-10824	-4366	1	0	0	2	0,00	2,00	0,75	0,99	24058	
5	200	-14300	-26972	1	0	0	2	0,00	2,00	0,75	0,94	22902	
5	0	-16393	-41889	1	0	0	2	0,00	2,00	0,75	0,92	22380	
6	500	-10497	-6335	1	0	0	2	0,00	2,00	0,75	0,98	23902	
6	200	-13888	-25893	1	0	0	2	0,00	2,00	0,75	0,94	22918	
6	0	-15994	-40200	1	0	0	2	0,00	2,00	0,75	0,92	22412	
7	500	-10789	-5059	1	0	0	2	0,00	2,00	0,75	0,98	24007	
7	200	-14228	-27231	1	0	0	2	0,00	2,00	0,75	0,94	22880	
7	0	-16325	-41966	1	0	0	2	0,00	2,00	0,75	0,92	22368	
8	500	-11559	-4539	1	0	0	2	0,00	2,00	0,75	0,99	24066	
8	200	-15097	-28055	1	0	0	2	0,00	2,00	0,75	0,94	22923	
8	0	-17174	-43812	1	0	0	2	0,00	2,00	0,75	0,92	22383	
9	500	-11598	-5592	1	0	0	2	0,00	2,00	0,75	0,98	23997	
9	200	-15129	-27071	1	0	0	2	0,00	2,00	0,75	0,94	22977	
9	0	-17206	-42838	1	0	0	2	0,00	2,00	0,75	0,92	22431	
10	500	-11743	-4954	1	0	0	2	0,00	2,00	0,75	0,99	24044	
10	200	-15299	-27739	1	0	0	2	0,00	2,00	0,75	0,94	22958	
10	0	-17372	-43721	1	0	0	2	0,00	2,00	0,75	0,92	22410	
11	500	-12451	-7471	1	0	0	2	0,00	2,00	0,75	0,98	23905	
11	200	-16755	-32663	1	0	0	2	0,00	2,00	0,75	0,94	22852	
11	0	-19520	-49879	1	0	0	2	0,00	2,00	0,75	0,92	22380	
12	500	-12742	-6195	1	0	0	2	0,00	2,00	0,75	0,98	23993	
12	200	-17095	-34001	1	0	0	2	0,00	2,00	0,75	0,94	22821	
12	0	-19851	-51645	1	0	0	2	0,00	2,00	0,75	0,92	22344	
13	500	-13512	-5675	1	0	0	2	0,00	2,00	0,75	0,99	24045	
13	200	-17964	-34825	1	0	0	2	0,00	2,00	0,75	0,94	22861	
13	0	-20700	-53491	1	0	0	2	0,00	2,00	0,75	0,92	22357	
14	500	-13551	-6728	1	0	0	2	0,00	2,00	0,75	0,98	23985	
14	200	-17996	-33841	1	0	0	2	0,00	2,00	0,75	0,94	22906	
14	0	-20732	-52517	1	0	0	2	0,00	2,00	0,75	0,92	22397	
15	500	-13697	-6090	1	0	0	2	0,00	2,00	0,75	0,99	24026	
15	200	-18166	-34510	1	0	0	2	0,00	2,00	0,75	0,94	22891	
15	0	-20898	-53400	1	0	0	2	0,00	2,00	0,75	0,92	22380	
16	500	-13371	-8059	1	0	0	2	0,00	2,00	0,75	0,98	23903	
16	200	-17754	-33431	1	0	0	2	0,00	2,00	0,75	0,94	22904	
16	0	-20499	-51711	1	0	0	2	0,00	2,00	0,75	0,92	22405	
17	500	-13662	-6783	1	0	0	2	0,00	2,00	0,75	0,98	23985	
17	200	-18094	-34768	1	0	0	2	0,00	2,00	0,75	0,94	22874	
17	0	-20830	-53477	1	0	0	2	0,00	2,00	0,75	0,92	22370	
18	500	-14432	-6263	1	0	0	2	0,00	2,00	0,75	0,99	24034	
18	200	-18963	-35593	1	0	0	2	0,00	2,00	0,75	0,94	22909	
18	0	-21678	-55323	1	0	0	2	0,00	2,00	0,75	0,92	22382	
19	500	-14471	-7316	1	0	0	2	0,00	2,00	0,75	0,98	23978	
19	200	-18996	-34609	1	0	0	2	0,00	2,00	0,75	0,94	22952	
19	0	-21711	-54348	1	0	0	2	0,00	2,00	0,75	0,92	22420	
20	500	-14617	-6678	1	0	0	2	0,00	2,00	0,75	0,99	24016	
20	200	-19166	-35277	1	0	0	2	0,00	2,00	0,75	0,94	22937	
20	0	-21876	-55231	1	0	0	2	0,00	2,00	0,75	0,92	22404	

Verifica a taglio con rottura per fessurazione diagonale per azioni non sismiche Circ.617 C8.7.1.5 gammaM 3

comb.	quota	Vd	N	ftd	b	sigma0	Vu	c.s.	
SLU 1	250	39	-12325	0.33	1.5	2.81	2994	77.32	
SLU 1	0	-6	-15016	0.33	1.5	3.42	3273	100	
SLU 2	250	40	-12667	0.33	1.5	2.89	3031	75.45	
SLU 2	0	-7	-15347	0.33	1.5	3.5	3305	100	
SLU 3	250	43	-13540	0.33	1.5	3.09	3123	73.32	
SLU 3	0	-8	-16195	0.33	1.5	3.69	3388	100	
SLU 4	250	42	-13572	0.33	1.5	3.09	3126	74.11	
SLU 4	0	-8	-16228	0.33	1.5	3.7	3391	100	
SLU 5	250	43	-13743	0.33	1.5	3.13	3144	73.28	
SLU 5	0	-8	-16393	0.33	1.5	3.74	3407	100	
SLU 6	250	42	-13329	0.33	1.5	3.04	3101	74.62	
SLU 6	0	-7	-15994	0.33	1.5	3.65	3368	100	
SLU 7	250	43	-13671	0.33	1.5	3.12	3136	72.93	
SLU 7	0	-8	-16325	0.33	1.5	3.72	3400	100	
SLU 8	250	45	-14544	0.33	1.5	3.31	3226	71.01	
SLU 8	0	-9	-17174	0.33	1.5	3.91	3480	100	
SLU 9	250	45	-14576	0.33	1.5	3.32	3229	71.73	
SLU 9	0	-9	-17206	0.33	1.5	3.92	3483	100	
SLU 10	250	46	-14747	0.33	1.5	3.36	3246	70.97	
SLU 10	0	-9	-17372	0.33	1.5	3.96	3499	100	
SLU 11	250	50	-16023	0.33	1.5	3.65	3371	66.98	
SLU 11	0	-8	-19520	0.33	1.5	4.45	3693	100	
SLU 12	250	52	-16364	0.33	1.5	3.73	3404	65.74	
SLU 12	0	-9	-19851	0.33	1.5	4.52	3722	100	
SLU 13	250	54	-17237	0.33	1.5	3.93	3486	64.32	
SLU 13	0	-10	-20700	0.33	1.5	4.72	3795	100	
SLU 14	250	54	-17270	0.33	1.5	3.94	3489	64.86	
SLU 14	0	-10	-20732	0.33	1.5	4.73	3798	100	
SLU 15	250	55	-17441	0.33	1.5	3.98	3505	64.29	
SLU 15	0	-10	-20898	0.33	1.5	4.76	3812	100	
SLU 16	250	53	-17027	0.33	1.5	3.88	3467	65.2	
SLU 16	0	-9	-20499	0.33	1.5	4.67	3778	100	
SLU 17	250	55	-17368	0.33	1.5	3.96	3499	64.05	
SLU 17	0	-9	-20830	0.33	1.5	4.75	3807	100	
SLU 18	250	57	-18241	0.33	1.5	4.16	3579	62.74	
SLU 18	0	-11	-21678	0.33	1.5	4.94	3878	100	
SLU 19	250	57	-18274	0.33	1.5	4.17	3582	63.25	

muratura

comb.	quota	Vd	N	ftd	b	sigma0	Vu	c.s.	
SLU 19	0	-10	-21711	0.33	1.5	4.95	3881	100	
SLU 20	250	57	-18445	0.33	1.5	4.2	3597	62.72	
SLU 20	0	-11	-21876	0.33	1.5	4.99	3895	100	

Verifica a pressoflessione fuori piano D.M. 14-01-08 (N.T.C.)
quota 200 Ta 0.08 Wa 0.1 denominatore 8

comb.	fd	Sa	x	N	M	Mc	c.s.	
SLV 1	11	0.35	20.49	-18863	22294	231217	10.37	
SLV 2	11	0.35	20.25	-18650	22294	230762	10.35	
SLV 3	11	0.35	19.08	-17573	22294	227712	10.21	
SLV 4	11	0.35	18.85	-17360	22294	226959	10.18	
SLV 5	11	0.35	18.86	-17365	22294	226979	10.18	
SLV 6	11	0.35	18.6	-17128	22294	226084	10.14	
SLV 7	11	0.35	14.19	-13063	22294	201264	9.03	
SLV 8	11	0.35	13.93	-12826	22294	199259	8.94	
SLV 9	11	0.35	16.05	-14780	22294	213936	9.6	
SLV 10	11	0.35	15.79	-14543	22294	212374	9.53	
SLV 11	11	0.35	11.38	-10478	22294	176144	7.9	
SLV 12	11	0.35	11.12	-10241	22294	173472	7.78	
SLV 13	11	0.35	11.13	-10246	22294	173536	7.78	
SLV 14	11	0.35	10.9	-10033	22294	171086	7.67	
SLV 15	11	0.35	9.73	-8956	22294	157955	7.09	
SLV 16	11	0.35	9.49	-8743	22294	155206	6.96	

Verifica dei meccanismi locali di collasso con analisi cinematica lineare
accelerazione limite = 92,39; forza di aggancio al piano = 30

combinazione	N top	N base	V orto	alfa0	M*	e*	a0*	
SLV 1	-13284	-20758	5	0.255	16.56	0.948	196	
SLV 2	-12936	-20601	4	0.26	16.207	0.947	200	
SLV 3	-11992	-19591	36	0.272	15.25	0.944	209	
SLV 4	-11645	-19434	36	0.277	14.897	0.943	214	
SLV 5	-13373	-19198	-41	0.252	16.65	0.948	193	
SLV 6	-12986	-19024	-42	0.257	16.257	0.947	197	
SLV 7	-9068	-15309	65	0.326	12.29	0.933	254	
SLV 8	-8681	-15134	64	0.336	11.899	0.931	262	
SLV 9	-12141	-16687	-49	0.268	15.4	0.944	207	
SLV 10	-11754	-16512	-50	0.274	15.008	0.943	211	
SLV 11	-7836	-12797	57	0.361	11.048	0.927	283	
SLV 12	-7449	-12622	56	0.374	10.658	0.924	294	
SLV 13	-9177	-12386	-21	0.327	12.4	0.933	255	
SLV 14	-8829	-12230	-21	0.336	12.049	0.931	262	
SLV 15	-7886	-11219	11	0.364	11.098	0.927	286	
SLV 16	-7538	-11063	10	0.376	10.748	0.925	295	

Maschio 7
Maschio considerato membratura sismica secondaria
Dati geometrici

X ini.	Y ini.	X fin.	Y fin.	quota i.	quota.s	l	sp.	h netta	h ini.	h fin.	a
240	1070	142.5	1070	L1	L2	97.5	45	400	500	500	

Materiale: Muratura in pietrame consolidata con iniezioni LC1
f medio 30
tau 0.9
E 24000
G 8053.69
Fattore di confidenza 1.35

Verifica a pressoflessione per azioni non sismiche 4.5.6.2 D.M. 14-01-08 (N.T.C.) gammaM 3

comb.	quota	N	M	p	es1	es2	ea	ev	e ver (cm)	Ft	Fl	Nu (daN)	
1	500	-8027	13632	1	0	0	2	0,00	2,00	0,75	0,95	23048	
1	200	-11142	-2871	1	0	0	2	0,00	2,00	0,75	0,99	24172	
1	0	-13261	-16051	1	0	0	2	0,00	2,00	0,75	0,96	23429	
2	500	-8363	12900	1	0	0	2	0,00	2,00	0,75	0,95	23170	
2	200	-11502	-4982	1	0	0	2	0,00	2,00	0,75	0,99	24035	
2	0	-13618	-18317	1	0	0	2	0,00	2,00	0,75	0,96	23324	
3	500	-8882	14271	1	0	0	2	0,00	2,00	0,75	0,95	23119	
3	200	-12085	-5818	1	0	0	2	0,00	2,00	0,75	0,98	23997	
3	0	-14188	-19769	1	0	0	2	0,00	2,00	0,75	0,96	23286	
4	500	-8768	15589	1	0	0	2	0,00	2,00	0,75	0,94	22986	
4	200	-11975	-4065	1	0	0	2	0,00	2,00	0,75	0,99	24108	
4	0	-14076	-18125	1	0	0	2	0,00	2,00	0,75	0,96	23368	
5	500	-8936	15224	1	0	0	2	0,00	2,00	0,75	0,95	23044	
5	200	-12155	-5120	1	0	0	2	0,00	2,00	0,75	0,99	24044	
5	0	-14254	-19258	1	0	0	2	0,00	2,00	0,75	0,96	23319	
6	500	-8588	16012	1	0	0	2	0,00	2,00	0,75	0,94	22919	
6	200	-11760	-1961	1	0	0	2	0,00	2,00	0,75	0,99	24243	
6	0	-13863	-15913	1	0	0	2	0,00	2,00	0,75	0,96	23477	
7	500	-8924	15281	1	0	0	2	0,00	2,00	0,75	0,95	23037	
7	200	-12120	-4073	1	0	0	2	0,00	2,00	0,75	0,99	24111	
7	0	-14220	-18180	1	0	0	2	0,00	2,00	0,75	0,96	23375	
8	500	-9443	16651	1	0	0	2	0,00	2,00	0,75	0,94	22997	
8	200	-12703	-4909	1	0	0	2	0,00	2,00	0,75	0,99	24071	
8	0	-14790	-19632	1	0	0	2	0,00	2,00	0,75	0,96	23337	
9	500	-9329	17970	1	0	0	2	0,00	2,00	0,75	0,94	22870	
9	200	-12593	-3155	1	0	0	2	0,00	2,00	0,75	0,99	24177	
9	0	-14678	-17987	1	0	0	2	0,00	2,00	0,75	0,96	23417	
10	500	-9497	17604	1	0	0	2	0,00	2,00	0,75	0,94	22927	
10	200	-12773	-4211	1	0	0	2	0,00	2,00	0,75	0,99	24115	
10	0	-14856	-19121	1	0	0	2	0,00	2,00	0,75	0,96	23369	
11	500	-10436	17721	1	0	0	2	0,00	2,00	0,75	0,95	23048	
11	200	-14485	-3732	1	0	0	2	0,00	2,00	0,75	0,99	24172	

comb.	quota	N	M	p	es1	es2	ea	ev	e ver (cm)	Ft	Fl	Nu (daN)	
11	0	-17240	-20866	1	0	0	2	0,00	2,00	0,75	0,96	23429	
12	500	-10772	16990	1	0	0	2	0,00	2,00	0,75	0,95	23142	
12	200	-14845	-5843	1	0	0	2	0,00	2,00	0,75	0,99	24066	
12	0	-17596	-23132	1	0	0	2	0,00	2,00	0,75	0,96	23347	
13	500	-11290	18360	1	0	0	2	0,00	2,00	0,75	0,95	23104	
13	200	-15428	-6679	1	0	0	2	0,00	2,00	0,75	0,99	24035	
13	0	-18166	-24584	1	0	0	2	0,00	2,00	0,75	0,96	23317	
14	500	-11176	19679	1	0	0	2	0,00	2,00	0,75	0,94	22999	
14	200	-15318	-4926	1	0	0	2	0,00	2,00	0,75	0,99	24122	
14	0	-18054	-22940	1	0	0	2	0,00	2,00	0,75	0,96	23382	
15	500	-11344	19313	1	0	0	2	0,00	2,00	0,75	0,95	23045	
15	200	-15498	-5982	1	0	0	2	0,00	2,00	0,75	0,99	24072	
15	0	-18232	-24073	1	0	0	2	0,00	2,00	0,75	0,96	23343	
16	500	-10997	20101	1	0	0	2	0,00	2,00	0,75	0,94	22947	
16	200	-15103	-2822	1	0	0	2	0,00	2,00	0,75	0,99	24227	
16	0	-17842	-20728	1	0	0	2	0,00	2,00	0,75	0,96	23466	
17	500	-11333	19370	1	0	0	2	0,00	2,00	0,75	0,95	23040	
17	200	-15463	-4934	1	0	0	2	0,00	2,00	0,75	0,99	24124	
17	0	-18198	-22995	1	0	0	2	0,00	2,00	0,75	0,96	23387	
18	500	-11851	20741	1	0	0	2	0,00	2,00	0,75	0,94	23008	
18	200	-16045	-5770	1	0	0	2	0,00	2,00	0,75	0,99	24092	
18	0	-18768	-24447	1	0	0	2	0,00	2,00	0,75	0,96	23357	
19	500	-11737	22059	1	0	0	2	0,00	2,00	0,75	0,94	22907	
19	200	-15936	-4016	1	0	0	2	0,00	2,00	0,75	0,99	24176	
19	0	-18656	-22803	1	0	0	2	0,00	2,00	0,75	0,96	23419	
20	500	-11905	21694	1	0	0	2	0,00	2,00	0,75	0,94	22951	
20	200	-16116	-5072	1	0	0	2	0,00	2,00	0,75	0,99	24127	
20	0	-18834	-23936	1	0	0	2	0,00	2,00	0,75	0,96	23381	

Verifica a taglio con rottura per fessurazione diagonale per azioni non sismiche Circ.617 C8.7.1.5 gammaM 3

comb.	quota	Vd	N	ftd	b	sigma0	Vu	c.s.	
SLU 1	250	49	-10478	0.33	1.5	2.39	2786	57.06	
SLU 1	0	0	-13261	0.33	1.5	3.02	3094	100	
SLU 2	250	51	-10837	0.33	1.5	2.47	2827	55.78	
SLU 2	0	0	-13618	0.33	1.5	3.1	3131	100	
SLU 3	250	54	-11422	0.33	1.5	2.6	2894	53.57	
SLU 3	0	0	-14188	0.33	1.5	3.23	3189	100	
SLU 4	250	54	-11314	0.33	1.5	2.58	2882	53.77	
SLU 4	0	0	-14076	0.33	1.5	3.21	3178	100	
SLU 5	250	55	-11493	0.33	1.5	2.62	2902	53.22	
SLU 5	0	0	-14254	0.33	1.5	3.25	3196	100	
SLU 6	250	53	-11097	0.33	1.5	2.53	2857	54.23	
SLU 6	0	0	-13863	0.33	1.5	3.16	3156	100	
SLU 7	250	55	-11456	0.33	1.5	2.61	2898	53.12	
SLU 7	0	0	-14220	0.33	1.5	3.24	3193	100	
SLU 8	250	58	-12040	0.33	1.5	2.74	2963	51.18	
SLU 8	0	0	-14790	0.33	1.5	3.37	3250	100	
SLU 9	250	57	-11932	0.33	1.5	2.72	2951	51.36	
SLU 9	0	0	-14678	0.33	1.5	3.35	3239	100	
SLU 10	250	58	-12112	0.33	1.5	2.76	2970	50.88	
SLU 10	0	0	-14856	0.33	1.5	3.39	3257	100	
SLU 11	250	63	-13622	0.33	1.5	3.1	3131	49.33	
SLU 11	0	0	-17240	0.33	1.5	3.93	3487	100	
SLU 12	250	65	-13981	0.33	1.5	3.19	3168	48.49	
SLU 12	0	0	-17596	0.33	1.5	4.01	3520	100	
SLU 13	250	69	-14565	0.33	1.5	3.32	3228	47	
SLU 13	0	0	-18166	0.33	1.5	4.14	3572	100	
SLU 14	250	68	-14457	0.33	1.5	3.3	3217	47.14	
SLU 14	0	0	-18054	0.33	1.5	4.11	3562	100	
SLU 15	250	69	-14637	0.33	1.5	3.34	3235	46.77	
SLU 15	0	0	-18232	0.33	1.5	4.16	3578	100	
SLU 16	250	67	-14241	0.33	1.5	3.25	3195	47.45	
SLU 16	0	0	-17842	0.33	1.5	4.07	3542	100	
SLU 17	250	69	-14599	0.33	1.5	3.33	3231	46.69	
SLU 17	0	0	-18198	0.33	1.5	4.15	3575	100	
SLU 18	250	73	-15184	0.33	1.5	3.46	3289	45.35	
SLU 18	0	0	-18768	0.33	1.5	4.28	3626	100	
SLU 19	250	72	-15076	0.33	1.5	3.44	3279	45.47	
SLU 19	0	0	-18656	0.33	1.5	4.25	3616	100	
SLU 20	250	73	-15255	0.33	1.5	3.48	3296	45.14	
SLU 20	0	0	-18834	0.33	1.5	4.29	3632	100	

Verifica a pressoflessione fuori piano D.M. 14-01-08 (N.T.C.)
quota 200 Ta 0.08 Wa 0.1 denominatore 8

comb.	fd	Sa	x	N	M	Mc	c.s.	
SLV 1	11	0.35	15.03	-13838	22294	207379	9.3	
SLV 2	11	0.35	14.77	-13600	22294	205569	9.22	
SLV 3	11	0.35	14.84	-13665	22294	206069	9.24	
SLV 4	11	0.35	14.58	-13427	22294	204214	9.16	
SLV 5	11	0.35	13.81	-12716	22294	198308	8.9	
SLV 6	11	0.35	13.52	-12450	22294	195965	8.79	
SLV 7	11	0.35	13.18	-12138	22294	193108	8.66	
SLV 8	11	0.35	12.89	-11873	22294	190599	8.55	
SLV 9	11	0.35	12.56	-11569	22294	187625	8.42	
SLV 10	11	0.35	12.28	-11303	22294	184952	8.3	
SLV 11	11	0.35	11.94	-10991	22294	181706	8.15	
SLV 12	11	0.35	11.65	-10726	22294	178867	8.02	
SLV 13	11	0.35	10.88	-10015	22294	170875	7.66	
SLV 14	11	0.35	10.62	-9777	22294	168076	7.54	
SLV 15	11	0.35	10.69	-9842	22294	168845	7.57	
SLV 16	11	0.35	10.43	-9604	22294	166002	7.45	

Verifica dei meccanismi locali di collasso con analisi cinematica lineare
accelerazione limite = 92,39; forza di aggancio al piano = 30

combinazione	N top	N base	V orto	alfa0	M*	e*	a0*	
SLV 1	-9403	-15847	-2	0.324	12.629	0.934	252	
SLV 2	-9386	-15620	-2	0.324	12.611	0.934	252	
SLV 3	-9525	-15768	35	0.318	12.752	0.935	247	
SLV 4	-9507	-15540	35	0.318	12.734	0.934	248	
SLV 5	-8629	-14645	-58	0.338	11.847	0.93	264	

muratura

combinazione	N top	N base	V orto	alfa0	M*	e*	a0*	
SLV 6	-8609	-14392	-58	0.339	11.827	0.93	264	
SLV 7	-9034	-14380	65	0.327	12.255	0.932	255	
SLV 8	-9014	-14127	65	0.328	12.235	0.932	255	
SLV 9	-8085	-13524	-69	0.352	11.299	0.928	276	
SLV 10	-8066	-13271	-69	0.353	11.279	0.928	276	
SLV 11	-8490	-13260	54	0.342	11.707	0.93	267	
SLV 12	-8470	-13006	54	0.343	11.687	0.93	268	
SLV 13	-7592	-12111	-39	0.371	10.802	0.925	291	
SLV 14	-7574	-11884	-39	0.371	10.784	0.925	292	
SLV 15	-7713	-12032	-2	0.371	10.924	0.926	291	
SLV 16	-7696	-11804	-2	0.371	10.906	0.926	291	

Maschio 8
Dati geometrici

X ini.	Y ini.	X fin.	Y fin.	quota i.	quota.s	l	sp.	h netta	h ini.	h fin.	a
680	1070	340	1070	L1	L2	340	45	400	500	500	

Materiale: Muratura in pietrame consolidata con iniezioni LC1
f medio 30
tau 0.9
E 24000
G 8053.69
Fattore di confidenza 1.35

Verifica a pressoflessione per azioni non sismiche 4.5.6.2 D.M. 14-01-08 (N.T.C.) gammaM 3

comb.	quota	N	M	p	es1	es2	ea	ev	e ver (cm)	Ft	Fl	Nu (daN)	
1	500	-29555	-78619	1	0	0	2	0,00	2,00	0,75	0,98	82917	
1	200	-42623	239538	1	0	0	2	0,00	2,00	0,75	0,95	80608	
1	0	-46407	363148	1	0	0	2	0,00	2,00	0,75	0,93	78888	
2	500	-30746	-72188	1	0	0	2	0,00	2,00	0,75	0,98	83160	
2	200	-43846	263116	1	0	0	2	0,00	2,00	0,75	0,94	80311	
2	0	-47495	393967	1	0	0	2	0,00	2,00	0,75	0,92	78522	
3	500	-33228	-79063	1	0	0	2	0,00	2,00	0,75	0,98	83136	
3	200	-46929	258159	1	0	0	2	0,00	2,00	0,75	0,95	80701	
3	0	-50525	444878	1	0	0	2	0,00	2,00	0,75	0,92	78124	
4	500	-33101	-88440	1	0	0	2	0,00	2,00	0,75	0,98	82908	
4	200	-47027	232457	1	0	0	2	0,00	2,00	0,75	0,95	81136	
4	0	-50735	435878	1	0	0	2	0,00	2,00	0,75	0,92	78291	
5	500	-33697	-85225	1	0	0	2	0,00	2,00	0,75	0,98	83019	
5	200	-47639	244246	1	0	0	2	0,00	2,00	0,75	0,95	80993	
5	0	-51280	451287	1	0	0	2	0,00	2,00	0,75	0,92	78128	
6	500	-32147	-86316	1	0	0	2	0,00	2,00	0,75	0,98	82897	
6	200	-45819	233055	1	0	0	2	0,00	2,00	0,75	0,95	81025	
6	0	-49524	395697	1	0	0	2	0,00	2,00	0,75	0,93	78760	
7	500	-33338	-79885	1	0	0	2	0,00	2,00	0,75	0,98	83123	
7	200	-47043	256633	1	0	0	2	0,00	2,00	0,75	0,95	80737	
7	0	-50612	426515	1	0	0	2	0,00	2,00	0,75	0,92	78419	
8	500	-35820	-86760	1	0	0	2	0,00	2,00	0,75	0,98	83103	
8	200	-50126	251677	1	0	0	2	0,00	2,00	0,75	0,95	81076	
8	0	-53643	477426	1	0	0	2	0,00	2,00	0,75	0,92	78050	
9	500	-35692	-96137	1	0	0	2	0,00	2,00	0,75	0,98	82891	
9	200	-50223	225975	1	0	0	2	0,00	2,00	0,75	0,96	81482	
9	0	-53853	468427	1	0	0	2	0,00	2,00	0,75	0,92	78208	
10	500	-36288	-92922	1	0	0	2	0,00	2,00	0,75	0,98	82994	
10	200	-50835	237764	1	0	0	2	0,00	2,00	0,75	0,96	81344	
10	0	-54397	483836	1	0	0	2	0,00	2,00	0,75	0,92	78055	
11	500	-38422	-102205	1	0	0	2	0,00	2,00	0,75	0,98	82917	
11	200	-55409	311399	1	0	0	2	0,00	2,00	0,75	0,95	80608	
11	0	-60329	472093	1	0	0	2	0,00	2,00	0,75	0,93	78888	
12	500	-39613	-95774	1	0	0	2	0,00	2,00	0,75	0,98	83106	
12	200	-56633	334977	1	0	0	2	0,00	2,00	0,75	0,95	80378	
12	0	-61417	502911	1	0	0	2	0,00	2,00	0,75	0,92	78605	
13	500	-42095	-102649	1	0	0	2	0,00	2,00	0,75	0,98	83090	
13	200	-59716	330021	1	0	0	2	0,00	2,00	0,75	0,95	80681	
13	0	-64447	553822	1	0	0	2	0,00	2,00	0,75	0,92	78289	
14	500	-41968	-112026	1	0	0	2	0,00	2,00	0,75	0,98	82910	
14	200	-59814	304318	1	0	0	2	0,00	2,00	0,75	0,95	81024	
14	0	-64657	544823	1	0	0	2	0,00	2,00	0,75	0,92	78420	
15	500	-42563	-108811	1	0	0	2	0,00	2,00	0,75	0,98	82998	
15	200	-60426	316107	1	0	0	2	0,00	2,00	0,75	0,95	80912	
15	0	-65202	560232	1	0	0	2	0,00	2,00	0,75	0,92	78290	
16	500	-41013	-109902	1	0	0	2	0,00	2,00	0,75	0,98	82902	
16	200	-58606	304916	1	0	0	2	0,00	2,00	0,75	0,95	80934	
16	0	-63446	504641	1	0	0	2	0,00	2,00	0,75	0,93	78788	
17	500	-42204	-103471	1	0	0	2	0,00	2,00	0,75	0,98	83079	
17	200	-59829	328494	1	0	0	2	0,00	2,00	0,75	0,95	80709	
17	0	-64534	535460	1	0	0	2	0,00	2,00	0,75	0,92	78520	
18	500	-44686	-110345	1	0	0	2	0,00	2,00	0,75	0,98	83066	
18	200	-62912	323538	1	0	0	2	0,00	2,00	0,75	0,95	80981	
18	0	-67564	586371	1	0	0	2	0,00	2,00	0,75	0,92	78223	
19	500	-44559	-119723	1	0	0	2	0,00	2,00	0,75	0,98	82896	
19	200	-63010	297836	1	0	0	2	0,00	2,00	0,75	0,96	81305	
19	0	-67775	577371	1	0	0	2	0,00	2,00	0,75	0,92	78347	
20	500	-45155	-116507	1	0	0	2	0,00	2,00	0,75	0,98	82979	
20	200	-63622	309625	1	0	0	2	0,00	2,00	0,75	0,96	81196	
20	0	-68319	592781	1	0	0	2	0,00	2,00	0,75	0,92	78224	

Verifica a taglio con rottura per fessurazione diagonale per azioni non sismiche Circ.617 C8.7.1.5 gammaM 3

comb.	quota	Vd	N	ftd	b	sigma0	Vu	c.s.	
SLU 1	250	-2731	-40413	0.33	1.18	2.64	12950	4.74	
SLU 1	0	-1610	-46407	0.33	1.18	3.03	13776	8.56	
SLU 2	250	-2799	-41646	0.33	1.18	2.72	13124	4.69	

comb.	quota	Vd	N	ftd	b	sigma0	Vu	c.s.	
SLU 2	0	-1653	-47495	0.33	1.18	3.1	13921	8.42	
SLU 3	250	-2632	-44682	0.33	1.18	2.92	13544	5.15	
SLU 3	0	-1415	-50525	0.33	1.18	3.3	14317	10.12	
SLU 4	250	-2493	-44749	0.33	1.18	2.92	13553	5.44	
SLU 4	0	-1269	-50735	0.33	1.18	3.32	14344	11.3	
SLU 5	250	-2526	-45366	0.33	1.18	2.97	13637	5.4	
SLU 5	0	-1291	-51280	0.33	1.18	3.35	14413	11.16	
SLU 6	250	-2646	-43566	0.33	1.18	2.85	13391	5.06	
SLU 6	0	-1454	-49524	0.33	1.18	3.24	14187	9.76	
SLU 7	250	-2714	-44799	0.33	1.18	2.93	13560	5	
SLU 7	0	-1497	-50612	0.33	1.18	3.31	14328	9.57	
SLU 8	250	-2546	-47834	0.33	1.18	3.13	13966	5.48	
SLU 8	0	-1259	-53643	0.33	1.18	3.51	14712	11.69	
SLU 9	250	-2408	-47902	0.33	1.18	3.13	13975	5.8	
SLU 9	0	-1113	-53853	0.33	1.18	3.52	14739	13.24	
SLU 10	250	-2441	-48519	0.33	1.18	3.17	14056	5.76	
SLU 10	0	-1135	-54397	0.33	1.18	3.56	14806	13.05	
SLU 11	250	-3551	-52538	0.33	1.18	3.43	14573	4.1	
SLU 11	0	-2093	-60329	0.33	1.18	3.94	15527	7.42	
SLU 12	250	-3618	-53770	0.33	1.18	3.51	14728	4.07	
SLU 12	0	-2136	-61417	0.33	1.18	4.01	15656	7.33	
SLU 13	250	-3451	-56806	0.33	1.18	3.71	15103	4.38	
SLU 13	0	-1898	-64447	0.33	1.18	4.21	16008	8.44	
SLU 14	250	-3312	-56874	0.33	1.18	3.72	15111	4.56	
SLU 14	0	-1752	-64657	0.33	1.18	4.23	16032	9.15	
SLU 15	250	-3346	-57490	0.33	1.18	3.76	15186	4.54	
SLU 15	0	-1774	-65202	0.33	1.18	4.26	16095	9.07	
SLU 16	250	-3466	-55690	0.33	1.18	3.64	14967	4.32	
SLU 16	0	-1937	-63446	0.33	1.18	4.15	15893	8.2	
SLU 17	250	-3533	-56923	0.33	1.18	3.72	15118	4.28	
SLU 17	0	-1980	-64534	0.33	1.18	4.22	16018	8.09	
SLU 18	250	-3366	-59958	0.33	1.18	3.92	15483	4.6	
SLU 18	0	-1742	-67564	0.33	1.18	4.42	16363	9.4	
SLU 19	250	-3227	-60026	0.33	1.18	3.92	15491	4.8	
SLU 19	0	-1596	-67775	0.33	1.18	4.43	16387	10.26	
SLU 20	250	-3261	-60643	0.33	1.18	3.96	15564	4.77	
SLU 20	0	-1618	-68319	0.33	1.18	4.47	16448	10.17	

Verifica a pressoflessione nel piano (7.8.2.2) e taglio con rottura per fessurazione diagonale (C8.7.1.5), gammaM = 2

comb.	quota	N	V par	V orto	M	M orto	N/(l*sp)	N/(l'*sp)	Mu	l'	fvd	Vt scorr.	Vt fess.diag.	
SLV 1	0	-69118	10675	158	2608326	-13405	4.52	4.52	6129708	340	1.24	18924	20599	
SLV 1	500	-37135	8022	-426	66303	-18556	2.43	2.43	4690588	340	0.82	12527	15733	
SLV 2	0	-67517	9828	155	2390403	-13280	4.41	4.41	6114893	340	1.22	18603	20383	
SLV 2	500	-36458	7455	-427	39693	-18544	2.38	2.38	4634075	340	0.81	12392	15614	
SLV 3	0	-70367	10503	-288	2498462	27398	4.6	4.6	6137081	340	1.25	19173	20766	
SLV 3	500	-37547	8471	253	143756	8826	2.45	2.45	4724433	340	0.82	12609	15805	
SLV 4	0	-68766	9655	-290	2280539	27523	4.49	4.49	6126974	340	1.23	18853	20551	
SLV 4	500	-36870	7904	253	117146	8838	2.41	2.41	4668576	340	0.82	12474	15686	
SLV 5	0	-54037	2803	727	1317354	-66204	3.53	3.53	5750985	340	1.04	15907	18465	
SLV 5	500	-33186	2512	-1160	-146755	-47257	2.17	2.17	4345923	340	0.77	11737	15023	
SLV 6	0	-52254	1859	724	1074668	-66065	3.42	3.42	5670841	340	1.02	15551	18196	
SLV 6	500	-32431	1880	-1161	-176389	-47243	2.12	2.12	4275909	340	0.76	11586	14884	
SLV 7	0	-58202	2227	-758	951143	69804	3.8	3.8	5909091	340	1.09	16740	19078	
SLV 7	500	-34559	4006	1104	111423	44018	2.26	2.26	4469949	340	0.79	12012	15274	
SLV 8	0	-56420	1283	-761	708456	69943	3.69	3.69	5846421	340	1.07	16384	18818	
SLV 8	500	-33805	3374	1104	81789	44031	2.21	2.21	4402373	340	0.78	11861	15137	
SLV 9	0	-42282	-4159	769	90331	-70652	2.76	2.76	5084671	340	0.89	13556	16613	
SLV 9	500	-30179	-1791	-1110	-253219	-44474	1.97	1.97	4058976	340	0.73	11136	14460	
SLV 10	0	-40499	-5103	766	-152356	-70513	2.65	2.65	4955215	340	0.86	13200	16313	
SLV 10	500	-29425	-2423	-1110	-282852	-44461	1.92	1.92	3983625	340	0.72	10985	14315	
SLV 11	0	-46448	-4735	-716	-275881	65356	3.04	3.04	5357994	340	0.94	14390	17292	
SLV 11	500	-31553	-297	1155	4959	46801	2.06	2.06	4192717	340	0.75	11411	14720	
SLV 12	0	-44665	-5679	-719	-518567	65495	2.92	2.92	5246012	340	0.92	14033	17004	
SLV 12	500	-30798	-929	1154	-24674	46814	2.01	2.01	4119805	340	0.74	11260	14578	
SLV 13	0	-29935	-12531	298	-1481752	-28232	1.96	1.96	4034694	340	0.72	11087	14413	
SLV 13	500	-27114	-6321	-259	-288576	-9281	1.77	1.77	3744525	340	0.69	10523	13862	
SLV 14	0	-28334	-13378	296	-1699675	-28107	1.85	1.91	3872279	330.04	0.71	10617	14103	
SLV 14	500	-26437	-6888	-259	-315185	-9269	1.73	1.73	3672039	340	0.68	10387	13726	
SLV 15	0	-31185	-12703	-147	-1591616	12571	2.04	2.04	4157284	340	0.74	11337	14651	
SLV 15	500	-27527	-5872	421	-211123	18102	1.8	1.8	3788085	340	0.69	10605	13944	
SLV 16	0	-29584	-13551	-150	-1809539	12696	1.93	2.01	3999577	326.5	0.74	10814	14346	
SLV 16	500	-26849	-6440	420	-237732	18114	1.75	1.75	3716256	340	0.68	10470	13809	

Verifica a pressoflessione fuori piano D.M. 14-01-08 (N.T.C.)
quota 200 Ta 0 Wa 0.1 denominatore 8

comb.	fd	Sa	x	N	M	Mc	c.s.	
SLV 1	11	0.24	17.8	-57162	54825	777367	14.18	
SLV 2	11	0.24	17.45	-56042	54825	771909	14.08	
SLV 3	11	0.24	18.17	-58353	54825	782742	14.28	
SLV 4	11	0.24	17.82	-57233	54825	777699	14.19	
SLV 5	11	0.24	14.87	-47742	54825	719288	13.12	
SLV 6	11	0.24	14.48	-46495	54825	709526	12.94	
SLV 7	11	0.24	16.1	-51712	54825	747132	13.63	
SLV 8	11	0.24	15.72	-50465	54825	738913	13.48	
SLV 9	11	0.24	12.71	-40804	54825	658840	12.02	
SLV 10	11	0.24	12.32	-39557	54825	646384	11.79	
SLV 11	11	0.24	13.94	-44774	54825	695262	12.68	
SLV 12	11	0.24	13.55	-43527	54825	684347	12.48	
SLV 13	11	0.24	10.6	-34035	54825	585423	10.68	
SLV 14	11	0.24	10.25	-32916	54825	571899	10.43	
SLV 15	11	0.24	10.97	-35226	54825	599375	10.93	
SLV 16	11	0.24	10.62	-34106	54825	586266	10.69	

Verifica dei meccanismi locali di collasso con analisi cinematica lineare
accelerazione limite = 92,39; forza di aggancio al piano = 30

combinazione	N top	N base	V orto	alfa0	M*	e*	a0*	
SLV 1	-37135	-69118	-426	0.288	48.433	0.939	223	
SLV 2	-36458	-67517	-427	0.291	47.747	0.938	226	
SLV 3	-37547	-70367	253	0.289	48.85	0.939	224	

muratura

combinazione	N top	N base	V orto	alfa0	M*	e*	a0*	
SLV 4	-36870	-68766	253	0.293	48.164	0.939	227	
SLV 5	-33186	-54037	-1160	0.292	44.438	0.934	227	
SLV 6	-32431	-52254	-1161	0.297	43.675	0.934	231	
SLV 7	-34559	-58202	1104	0.286	45.827	0.936	222	
SLV 8	-33805	-56420	1104	0.29	45.064	0.935	225	
SLV 9	-30179	-42282	-1110	0.313	41.402	0.931	244	
SLV 10	-29425	-40499	-1110	0.318	40.641	0.93	249	
SLV 11	-31553	-46448	1155	0.302	42.788	0.932	236	
SLV 12	-30798	-44665	1154	0.307	42.027	0.931	240	
SLV 13	-27114	-29935	-259	0.361	38.312	0.926	283	
SLV 14	-26437	-28334	-259	0.367	37.63	0.925	289	
SLV 15	-27527	-31185	421	0.353	38.727	0.927	277	
SLV 16	-26849	-29584	420	0.359	38.045	0.926	282	

Maschio 9
Maschio considerato membratura sismica secondaria
Dati geometrici

X ini.	Y ini.	X fin.	Y fin.	quota i.	quota.s	l	sp.	h netta	h ini.	h fin.	a
220	1522.5	142.5	1522.5	L1	L2	77.5	85	400	500	500	

Materiale: Muratura in pietrame consolidata con iniezioni LC1
f medio 30
tau 0.9
E 24000
G 8053.69
Fattore di confidenza 1.35

Verifica a pressoflessione per azioni non sismiche 4.5.6.2 D.M. 14-01-08 (N.T.C.) gammaM 3

comb.	quota	N	M	p	es1	es2	ea	ev	e ver (cm)	Ft	Fl	Nu (daN)	
1	500	-8828	39664	1	-7.07	0	2	0,00	9,07	0,67	0,82	26658	
1	200	-14338	-37734	1	-7.07	0	2	0,00	4,54	0,81	0,89	35129	
1	0	-16276	27505	1	-7.07	0	2	0,00	9,07	0,67	0,93	30331	
2	500	-9020	39781	1	-7.07	0	2	0,00	9,07	0,67	0,82	26771	
2	200	-14592	-39995	1	-7.07	0	2	0,00	4,53	0,81	0,89	34960	
2	0	-16485	26958	1	-7.07	0	2	0,00	9,07	0,67	0,93	30408	
3	500	-9404	42912	1	-7.01	0	2	0,00	9,01	0,67	0,82	26625	
3	200	-15133	-41728	1	-7.01	0	2	0,00	4,50	0,81	0,89	34983	
3	0	-16914	28508	1	-7.01	0	2	0,00	9,01	0,67	0,93	30404	
4	500	-9377	44137	1	-6.99	0	2	0,00	8,99	0,67	0,81	26455	
4	200	-15112	-40210	1	-6.99	0	2	0,00	4,49	0,81	0,89	35153	
4	0	-16890	29720	1	-6.99	0	2	0,00	8,99	0,67	0,93	30328	
5	500	-9473	44195	1	-6.99	0	2	0,00	8,99	0,67	0,81	26511	
5	200	-15239	-41340	1	-6.99	0	2	0,00	4,49	0,81	0,89	35071	
5	0	-16994	29446	1	-6.99	0	2	0,00	8,99	0,67	0,93	30365	
6	500	-9459	44137	1	-7.03	0	2	0,00	9,03	0,67	0,81	26471	
6	200	-15121	-37742	1	-7.03	0	2	0,00	4,51	0,81	0,90	35380	
6	0	-16945	30646	1	-7.03	0	2	0,00	9,03	0,67	0,93	30221	
7	500	-9651	44253	1	-7.03	0	2	0,00	9,03	0,67	0,82	26581	
7	200	-15375	-40003	1	-7.03	0	2	0,00	4,51	0,81	0,90	35215	
7	0	-17153	30098	1	-7.03	0	2	0,00	9,03	0,67	0,93	30296	
8	500	-10036	47384	1	-6.97	0	2	0,00	8,97	0,67	0,81	26451	
8	200	-15916	-41735	1	-6.97	0	2	0,00	4,49	0,81	0,89	35227	
8	0	-17583	31648	1	-6.97	0	2	0,00	8,97	0,67	0,93	30292	
9	500	-10008	48609	1	-6.95	0	2	0,00	8,95	0,67	0,80	26291	
9	200	-15895	-40217	1	-6.95	0	2	0,00	4,48	0,81	0,90	35389	
9	0	-17559	32860	1	-6.95	0	2	0,00	8,95	0,67	0,92	30218	
10	500	-10104	48667	1	-6.95	0	2	0,00	8,95	0,67	0,81	26345	
10	200	-16022	-41347	1	-6.95	0	2	0,00	4,47	0,81	0,90	35310	
10	0	-17663	32586	1	-6.95	0	2	0,00	8,95	0,67	0,93	30255	
11	500	-11476	51564	1	-7.07	0	2	0,00	9,07	0,67	0,82	26658	
11	200	-18639	-49055	1	-7.07	0	2	0,00	4,54	0,81	0,89	35129	
11	0	-21159	35757	1	-7.07	0	2	0,00	9,07	0,67	0,93	30331	
12	500	-11668	51680	1	-7.07	0	2	0,00	9,07	0,67	0,82	26746	
12	200	-18893	-51316	1	-7.07	0	2	0,00	4,54	0,81	0,89	34999	
12	0	-21368	35209	1	-7.07	0	2	0,00	9,07	0,67	0,93	30390	
13	500	-12052	54811	1	-7.02	0	2	0,00	9,02	0,67	0,82	26633	
13	200	-19435	-53048	1	-7.02	0	2	0,00	4,51	0,81	0,89	35015	
13	0	-21797	36759	1	-7.02	0	2	0,00	9,02	0,67	0,93	30388	
14	500	-12025	56036	1	-7.01	0	2	0,00	9,01	0,67	0,81	26500	
14	200	-19413	-51530	1	-7.01	0	2	0,00	4,50	0,81	0,89	35147	
14	0	-21773	37972	1	-7.01	0	2	0,00	9,01	0,67	0,93	30329	
15	500	-12121	56095	1	-7.01	0	2	0,00	9,01	0,67	0,81	26543	
15	200	-19540	-52660	1	-7.01	0	2	0,00	4,50	0,81	0,89	35084	
15	0	-21877	37698	1	-7.01	0	2	0,00	9,01	0,67	0,93	30358	
16	500	-12108	56036	1	-7.04	0	2	0,00	9,04	0,67	0,81	26512	
16	200	-19422	-49062	1	-7.04	0	2	0,00	4,52	0,81	0,90	35324	
16	0	-21828	38897	1	-7.04	0	2	0,00	9,04	0,67	0,93	30246	
17	500	-12300	56153	1	-7.04	0	2	0,00	9,04	0,67	0,82	26598	
17	200	-19676	-51323	1	-7.04	0	2	0,00	4,52	0,81	0,89	35197	
17	0	-22036	38349	1	-7.04	0	2	0,00	9,04	0,67	0,93	30304	
18	500	-12684	59283	1	-6.99	0	2	0,00	8,99	0,67	0,81	26494	
18	200	-20218	-53056	1	-6.99	0	2	0,00	4,50	0,81	0,89	35207	
18	0	-22466	39900	1	-6.99	0	2	0,00	8,99	0,67	0,93	30302	
19	500	-12657	60508	1	-6.98	0	2	0,00	8,98	0,67	0,81	26368	
19	200	-20196	-51537	1	-6.98	0	2	0,00	4,49	0,81	0,90	35334	
19	0	-22441	41112	1	-6.98	0	2	0,00	8,98	0,67	0,93	30244	
20	500	-12753	60567	1	-6.98	0	2	0,00	8,98	0,67	0,81	26410	
20	200	-20323	-52668	1	-6.98	0	2	0,00	4,49	0,81	0,90	35272	
20	0	-22546	40838	1	-6.98	0	2	0,00	8,98	0,67	0,93	30272	

Verifica a taglio con rottura per fessurazione diagonale per azioni non sismiche Circ.617 C8.7.1.5 gammaM 3

comb.	quota	Vd	N	ftd	b	sigma0	Vu	c.s.	

comb.	quota	Vd	N	ftd	b	sigma0	Vu	c.s.	
SLU 1	250	36	-13793	0.33	1.5	2.09	3950	100	
SLU 1	100	-46	-15891	0.33	1.5	2.41	4201	91.03	
SLU 2	250	37	-14047	0.33	1.5	2.13	3981	100	
SLU 2	100	-48	-16145	0.33	1.5	2.45	4231	88.54	
SLU 3	250	38	-14591	0.33	1.5	2.21	4048	100	
SLU 3	100	-51	-16674	0.33	1.5	2.53	4291	84.15	
SLU 4	250	38	-14570	0.33	1.5	2.21	4045	100	
SLU 4	100	-51	-16648	0.33	1.5	2.53	4288	84.52	
SLU 5	250	39	-14697	0.33	1.5	2.23	4060	100	
SLU 5	100	-52	-16775	0.33	1.5	2.55	4303	83.46	
SLU 6	250	38	-14578	0.33	1.5	2.21	4046	100	
SLU 6	100	-50	-16659	0.33	1.5	2.53	4290	85.65	
SLU 7	250	39	-14832	0.33	1.5	2.25	4077	100	
SLU 7	100	-52	-16913	0.33	1.5	2.57	4318	83.51	
SLU 8	250	41	-15376	0.33	1.5	2.33	4141	100	
SLU 8	100	-55	-17443	0.33	1.5	2.65	4378	79.71	
SLU 9	250	41	-15355	0.33	1.5	2.33	4139	100	
SLU 9	100	-55	-17416	0.33	1.5	2.64	4375	80.03	
SLU 10	250	41	-15482	0.33	1.5	2.35	4154	100	
SLU 10	100	-55	-17543	0.33	1.5	2.66	4389	79.11	
SLU 11	250	46	-17931	0.33	1.5	2.72	4432	95.43	
SLU 11	100	-60	-20658	0.33	1.5	3.14	4723	78.71	
SLU 12	250	47	-18185	0.33	1.5	2.76	4460	94.26	
SLU 12	100	-62	-20912	0.33	1.5	3.17	4749	77.05	
SLU 13	250	49	-18728	0.33	1.5	2.84	4519	92.05	
SLU 13	100	-65	-21442	0.33	1.5	3.25	4803	74.07	
SLU 14	250	49	-18707	0.33	1.5	2.84	4517	92.22	
SLU 14	100	-65	-21415	0.33	1.5	3.25	4800	74.32	
SLU 15	250	49	-18834	0.33	1.5	2.86	4530	91.68	
SLU 15	100	-65	-21542	0.33	1.5	3.27	4813	73.59	
SLU 16	250	49	-18716	0.33	1.5	2.84	4518	92.31	
SLU 16	100	-64	-21427	0.33	1.5	3.25	4801	75.11	
SLU 17	250	50	-18970	0.33	1.5	2.88	4545	91.24	
SLU 17	100	-66	-21680	0.33	1.5	3.29	4827	73.63	
SLU 18	250	52	-19514	0.33	1.5	2.96	4603	89.22	
SLU 18	100	-69	-22210	0.33	1.5	3.37	4880	70.97	
SLU 19	250	51	-19493	0.33	1.5	2.96	4601	89.37	
SLU 19	100	-69	-22183	0.33	1.5	3.37	4878	71.19	
SLU 20	250	52	-19620	0.33	1.5	2.98	4614	88.88	
SLU 20	100	-69	-22310	0.33	1.5	3.39	4890	70.54	

Verifica a pressoflessione fuori piano D.M. 14-01-08 (N.T.C.)
quota 200 Ta 0.04 Wa 0.19 denominatore 8

comb.	fd	Sa	x	N	M	Mc	c.s.	
SLV 1	11	0.3	25.57	-18713	28562	556097	19.47	
SLV 2	11	0.3	24.49	-17929	28562	542393	18.99	
SLV 3	11	0.3	26.03	-19055	28562	561804	19.67	
SLV 4	11	0.3	24.96	-18271	28562	548466	19.2	
SLV 5	11	0.3	21.76	-15925	28562	503574	17.63	
SLV 6	11	0.3	20.56	-15052	28562	484931	16.98	
SLV 7	11	0.3	23.31	-17064	28562	526317	18.43	
SLV 8	11	0.3	22.12	-16191	28562	509034	17.82	
SLV 9	11	0.3	18.91	-13839	28562	457325	16.01	
SLV 10	11	0.3	17.71	-12965	28562	436193	15.27	
SLV 11	11	0.3	20.46	-14978	28562	483315	16.92	
SLV 12	11	0.3	19.27	-14104	28562	463543	16.23	
SLV 13	11	0.3	16.07	-11759	28562	405301	14.19	
SLV 14	11	0.3	14.99	-10975	28562	384143	13.45	
SLV 15	11	0.3	16.53	-12101	28562	414255	14.5	
SLV 16	11	0.3	15.46	-11316	28562	393464	13.78	

Verifica dei meccanismi locali di collasso con analisi cinematica lineare
accelerazione limite = 92,39; forza di aggancio al piano = 30

combinazione	N top	N base	V orto	alfa0	M*	e*	a0*	
SLV 1	-10786	-19003	1213	0.21	15.602	0.923	165	
SLV 2	-10468	-18536	1223	0.212	15.282	0.922	167	
SLV 3	-10834	-19107	1277	0.205	15.65	0.923	161	
SLV 4	-10515	-18640	1287	0.207	15.33	0.922	163	
SLV 5	-9844	-17525	1149	0.223	14.656	0.919	176	
SLV 6	-9489	-17005	1160	0.225	14.301	0.918	178	
SLV 7	-10003	-17870	1363	0.205	14.816	0.92	162	
SLV 8	-9648	-17350	1374	0.207	14.46	0.918	163	
SLV 9	-9069	-16339	1159	0.229	13.88	0.916	182	
SLV 10	-8714	-15819	1170	0.232	13.525	0.914	185	
SLV 11	-9228	-16684	1373	0.21	14.039	0.917	167	
SLV 12	-8873	-16164	1384	0.212	13.684	0.915	169	
SLV 13	-8202	-15050	1246	0.231	13.014	0.912	184	
SLV 14	-7883	-14583	1256	0.234	12.697	0.911	187	
SLV 15	-8250	-15153	1311	0.225	13.062	0.912	179	
SLV 16	-7931	-14686	1320	0.227	12.745	0.911	181	

Maschio 10
Dati geometrici

X ini.	Y ini.	X fin.	Y fin.	quota i.	quota.s	l	sp.	h netta	h ini.	h fin.	a
680	705	680	142.5	L1	L2	562.5	100	400	500	500	

Materiale: Muratura in pietrame consolidata con iniezioni LC1
f medio 30
tau 0.9
E 24000
G 8053.69
Fattore di confidenza 1.35

Verifica a pressoflessione per azioni non sismiche 4.5.6.2 D.M. 14-01-08 (N.T.C.) gammaM 3

comb.	quota	N	M	p	es1	es2	ea	ev	e ver (cm)	Ft	Fl	Nu (daN)
1	500	-89989	-1586898	1	0	0.37	2	0,00	2,37	0,90	0,90	339149
1	200	-132191	-3126313	1	0	0.37	2	0,00	2,00	0,91	0,87	330732
1	0	-153231	-4378626	1	0	0.37	2	0,00	2,37	0,90	0,84	316336
2	500	-92955	-1687529	1	0	0.35	2	0,00	2,35	0,90	0,90	338201
2	200	-135150	-3225101	1	0	0.35	2	0,00	2,00	0,91	0,87	330281
2	0	-155842	-4450862	1	0	0.35	2	0,00	2,35	0,90	0,84	316495
3	500	-105963	-1757520	1	0	0.43	2	0,00	2,43	0,90	0,91	340628
3	200	-146568	-3558895	1	0	0.43	2	0,00	2,00	0,91	0,87	329398
3	0	-165303	-4655573	1	0	0.43	2	0,00	2,43	0,90	0,84	316537
4	500	-108573	-1686885	1	0	0.46	2	0,00	2,46	0,90	0,91	342361
4	200	-148504	-3603162	1	0	0.46	2	0,00	2,00	0,91	0,87	329437
4	0	-166747	-4671069	1	0	0.46	2	0,00	2,46	0,90	0,84	316435
5	500	-110056	-1737201	1	0	0.46	2	0,00	2,46	0,90	0,91	341920
5	200	-149983	-3652556	1	0	0.46	2	0,00	2,00	0,91	0,86	329247
5	0	-168052	-4707188	1	0	0.46	2	0,00	2,46	0,90	0,84	316509
6	500	-102952	-1664165	1	0	0.43	2	0,00	2,43	0,90	0,91	341424
6	200	-144237	-3435066	1	0	0.43	2	0,00	2,00	0,91	0,87	330382
6	0	-163625	-4619800	1	0	0.43	2	0,00	2,43	0,90	0,84	316316
7	500	-105918	-1764797	1	0	0.42	2	0,00	2,42	0,90	0,91	340532
7	200	-147195	-3533854	1	0	0.42	2	0,00	2,00	0,91	0,87	329976
7	0	-166236	-4692037	1	0	0.42	2	0,00	2,42	0,90	0,84	316467
8	500	-118927	-1834787	1	0	0.48	2	0,00	2,48	0,90	0,91	342429
8	200	-158614	-3867648	1	0	0.48	2	0,00	2,00	0,91	0,86	329181
8	0	-175697	-4896747	1	0	0.48	2	0,00	2,48	0,90	0,85	316585
9	500	-121536	-1764152	1	0	0.51	2	0,00	2,51	0,90	0,92	343933
9	200	-160550	-3911915	1	0	0.51	2	0,00	2,00	0,91	0,86	329220
9	0	-177141	-4912244	1	0	0.51	2	0,00	2,51	0,90	0,85	316515
10	500	-123019	-1814468	1	0	0.5	2	0,00	2,50	0,90	0,92	343520
10	200	-162029	-3961309	1	0	0.5	2	0,00	2,00	0,91	0,86	329046
10	0	-178446	-4948362	1	0	0.5	2	0,00	2,50	0,90	0,85	316583
11	500	-116986	-2062968	1	0	0.37	2	0,00	2,37	0,90	0,90	339149
11	200	-171849	-4064206	1	0	0.37	2	0,00	2,00	0,91	0,87	330732
11	0	-199200	-5692213	1	0	0.37	2	0,00	2,37	0,90	0,84	316336
12	500	-119952	-2163599	1	0	0.36	2	0,00	2,36	0,90	0,90	338414
12	200	-174807	-4162995	1	0	0.36	2	0,00	2,00	0,91	0,87	330383
12	0	-201812	-5764450	1	0	0.36	2	0,00	2,36	0,90	0,84	316459
13	500	-132960	-2233590	1	0	0.41	2	0,00	2,41	0,90	0,91	340328
13	200	-186226	-4496789	1	0	0.41	2	0,00	2,00	0,91	0,87	329682
13	0	-211272	-5969160	1	0	0.41	2	0,00	2,41	0,90	0,84	316484
14	500	-135570	-2162954	1	0	0.44	2	0,00	2,44	0,90	0,91	341724
14	200	-188161	-4541056	1	0	0.44	2	0,00	2,00	0,91	0,87	329710
14	0	-212716	-5984657	1	0	0.44	2	0,00	2,44	0,90	0,84	316396
15	500	-137053	-2213270	1	0	0.44	2	0,00	2,44	0,90	0,91	341376
15	200	-189640	-4590450	1	0	0.44	2	0,00	2,00	0,91	0,87	329557
15	0	-214021	-6020775	1	0	0.44	2	0,00	2,44	0,90	0,84	316455
16	500	-129949	-2140235	1	0	0.42	2	0,00	2,42	0,90	0,91	340953
16	200	-183895	-4372959	1	0	0.42	2	0,00	2,00	0,91	0,87	330457
16	0	-209594	-5933388	1	0	0.42	2	0,00	2,42	0,90	0,84	316312
17	500	-132915	-2240866	1	0	0.41	2	0,00	2,41	0,90	0,91	340252
17	200	-186853	-4471748	1	0	0.41	2	0,00	2,00	0,91	0,87	330136
17	0	-212206	-6005624	1	0	0.41	2	0,00	2,41	0,90	0,84	316431
18	500	-145923	-2310857	1	0	0.46	2	0,00	2,46	0,90	0,91	341825
18	200	-198271	-4805542	1	0	0.46	2	0,00	2,00	0,91	0,87	329492
18	0	-221666	-6210335	1	0	0.46	2	0,00	2,46	0,90	0,84	316507
19	500	-148533	-2240222	1	0	0.48	2	0,00	2,48	0,90	0,92	343068
19	200	-200207	-4849809	1	0	0.48	2	0,00	2,00	0,91	0,87	329519
19	0	-223110	-6225832	1	0	0.48	2	0,00	2,48	0,90	0,85	316441
20	500	-150016	-2290537	1	0	0.48	2	0,00	2,48	0,90	0,92	342738
20	200	-201686	-4899203	1	0	0.48	2	0,00	2,00	0,91	0,87	329377
20	0	-224415	-6261950	1	0	0.48	2	0,00	2,48	0,90	0,85	316496

Verifica a taglio con rottura per fessurazione diagonale per azioni non sismiche Circ.617 C8.7.1.5 gammaM 3

comb.	quota	Vd	N	ftd	b	sigma0	Vu	c.s.
SLU 1	250	-421	-122706	0.33	1	2.18	51501	100
SLU 1	0	-1249	-153231	0.33	1	2.72	56786	45.47
SLU 2	250	114	-125697	0.33	1	2.23	52042	100
SLU 2	0	-732	-155842	0.33	1	2.77	57215	78.19
SLU 3	250	2299	-137464	0.33	1	2.44	54120	23.54
SLU 3	0	1395	-165303	0.33	1	2.94	58745	42.1
SLU 4	250	2701	-139516	0.33	1	2.48	54475	20.16
SLU 4	0	1790	-166747	0.33	1	2.96	58975	32.95
SLU 5	250	2969	-141011	0.33	1	2.51	54731	18.44
SLU 5	0	2049	-168052	0.33	1	2.99	59182	28.89
SLU 6	250	1253	-135014	0.33	1	2.4	53694	42.87
SLU 6	0	360	-163625	0.33	1	2.91	58477	100
SLU 7	250	1787	-138005	0.33	1	2.45	54214	30.33
SLU 7	0	877	-166236	0.33	1	2.96	58894	67.13
SLU 8	250	3973	-149772	0.33	1	2.66	56212	14.15
SLU 8	0	3004	-175697	0.33	1	3.12	60381	20.1
SLU 9	250	4375	-151823	0.33	1	2.7	56553	12.93
SLU 9	0	3399	-177141	0.33	1	3.15	60605	17.83
SLU 10	250	4643	-153319	0.33	1	2.73	56800	12.23
SLU 10	0	3658	-178446	0.33	1	3.17	60806	16.62
SLU 11	250	-547	-159518	0.33	1	2.84	57815	100
SLU 11	0	-1623	-199200	0.33	1	3.54	63926	39.38
SLU 12	250	-13	-162509	0.33	1	2.89	58298	100
SLU 12	0	-1106	-201812	0.33	1	3.59	64308	58.12
SLU 13	250	2173	-174276	0.33	1	3.1	60160	27.68
SLU 13	0	1021	-211272	0.33	1	3.76	65673	64.34
SLU 14	250	2575	-176327	0.33	1	3.13	60479	23.49
SLU 14	0	1415	-212716	0.33	1	3.78	65879	46.54
SLU 15	250	2842	-177823	0.33	1	3.16	60710	21.36
SLU 15	0	1674	-214021	0.33	1	3.8	66064	39.47
SLU 16	250	1126	-171826	0.33	1	3.05	59777	53.08
SLU 16	0	-14	-209594	0.33	1	3.73	65433	100
SLU 17	250	1661	-174817	0.33	1	3.11	60244	36.27
SLU 17	0	503	-212206	0.33	1	3.77	65806	100
SLU 18	250	3847	-186583	0.33	1	3.32	62048	16.13
SLU 18	0	2630	-221666	0.33	1	3.94	67140	25.53

comb.	quota	Vd	N	ftd	b	sigma0	Vu	c.s.	
SLU 19	250	4249	-188635	0.33	1	3.35	62358	14.68	
SLU 19	0	3024	-223110	0.33	1	3.97	67341	22.27	
SLU 20	250	4516	-190131	0.33	1	3.38	62582	13.86	
SLU 20	0	3283	-224415	0.33	1	3.99	67523	20.57	

Verifica a pressoflessione nel piano (7.8.2.2) e taglio con rottura per fessurazione diagonale (C8.7.1.5), gammaM = 2

comb.	quota	N	V par	V orto	M	M orto	N/(l*sp)	N/(l'*sp)	Mu	l'	fvd	Vt scorr.	Vt fess.diag.	
SLV 1	0	-170983	3568	-1506	-4501800	99416	3.04	3.04	32611526	562.5	0.94	52947	74833	
SLV 1	500	-110643	-13164	2620	-1786353	89941	1.97	1.97	24637348	562.5	0.73	40879	62473	
SLV 2	0	-170410	-949	-1544	-5063750	101551	3.03	3.03	32553885	562.5	0.94	52832	74725	
SLV 2	500	-108057	-17153	2605	-1642478	90154	1.92	1.92	24209528	562.5	0.72	40361	61888	
SLV 3	0	-164458	-16694	-1854	-7231283	120613	2.92	2.92	31935079	562.5	0.92	51642	73596	
SLV 3	500	-95825	-29850	2596	-1181536	77151	1.7	1.7	22089573	562.5	0.67	37915	59043	
SLV 4	0	-163884	-21211	-1893	-7793233	122747	2.91	2.91	31873475	562.5	0.92	51527	73486	
SLV 4	500	-93240	-33839	2581	-1037662	77363	1.66	1.66	21621189	562.5	0.66	37398	58424	
SLV 5	0	-175429	33941	302	-200741	-12061	3.12	3.12	33046625	562.5	0.96	53836	75664	
SLV 5	500	-128362	12342	793	-2672626	45867	2.28	2.28	27378762	562.5	0.79	44422	66341	
SLV 6	0	-174791	28911	259	-826548	-9683	3.11	3.11	32985418	562.5	0.95	53708	75545	
SLV 6	500	-125482	7899	776	-2512402	46103	2.23	2.23	26955898	562.5	0.78	43846	65728	
SLV 7	0	-153678	-33600	-859	-9299018	58594	2.73	2.73	30718872	562.5	0.88	49486	71507	
SLV 7	500	-78970	-43277	713	-656572	3232	1.4	1.4	18908754	562.5	0.61	34544	54882	
SLV 8	0	-153039	-38630	-902	-9924825	60971	2.72	2.72	30642956	562.5	0.88	49358	71381	
SLV 8	500	-76091	-47719	696	-496348	3469	1.35	1.35	18335309	562.5	0.6	33968	54139	
SLV 9	0	-172687	39493	1501	729030	-86312	3.07	3.07	32780764	562.5	0.95	53287	75152	
SLV 9	500	-128606	17324	-798	-2820466	-4691	2.29	2.29	27414202	562.5	0.79	44471	66393	
SLV 10	0	-172049	34463	1458	103223	-83935	3.06	3.06	32717703	562.5	0.95	53160	75033	
SLV 10	500	-125726	12882	-815	-2660242	-4455	2.24	2.24	26992081	562.5	0.78	43895	65780	
SLV 11	0	-150936	-28048	339	-8369247	-15657	2.68	2.68	30389857	562.5	0.87	48937	70965	
SLV 11	500	-79214	-38294	-877	-804412	-47326	1.41	1.41	18956958	562.5	0.61	34593	54945	
SLV 12	0	-150297	-33078	296	-8995054	-13280	2.67	2.67	30312087	562.5	0.87	48809	70839	
SLV 12	500	-76335	-42737	-895	-644188	-47089	1.36	1.36	18384257	562.5	0.6	34017	54203	
SLV 13	0	-161843	22075	2491	-1402562	-148088	2.88	2.88	31651328	562.5	0.91	51119	73095	
SLV 13	500	-111457	3444	-2682	-2279152	-78585	1.98	1.98	24770498	562.5	0.73	41041	62656	
SLV 14	0	-161269	17558	2452	-1964511	-145953	2.87	2.87	31588136	562.5	0.91	51004	72984	
SLV 14	500	-108871	-545	-2698	-2135278	-78373	1.94	1.94	24344905	562.5	0.72	40524	62073	
SLV 15	0	-155317	1812	2142	-4132045	-126891	2.76	2.76	30911727	562.5	0.89	49813	71828	
SLV 15	500	-96639	-13242	-2706	-1674336	-91376	1.72	1.72	22235488	562.5	0.68	38078	59237	
SLV 16	0	-154744	-2705	2104	-4693995	-124757	2.75	2.75	30844572	562.5	0.88	49699	71716	
SLV 16	500	-94053	-17231	-2722	-1530461	-91164	1.67	1.67	21769330	562.5	0.67	37561	58620	

Verifica a pressoflessione fuori piano D.M. 14-01-08 (N.T.C.)
quota 200 Ta 0 Wa 0.22 denominatore 8

comb.	fd	Sa	x	N	M	Mc	c.s.	
SLV 1	11	0.24	28.44	-151064	201562	5405394	26.82	
SLV 2	11	0.24	28.01	-148780	201562	5355654	26.57	
SLV 3	11	0.24	25.78	-136963	201562	5082614	25.22	
SLV 4	11	0.24	25.35	-134679	201562	5026812	24.94	
SLV 5	11	0.24	31.64	-168073	201562	5744960	28.5	
SLV 6	11	0.24	31.16	-165529	201562	5697649	28.27	
SLV 7	11	0.24	22.79	-121072	201562	4673970	23.19	
SLV 8	11	0.24	22.31	-118528	201562	4604157	22.84	
SLV 9	11	0.24	31.71	-168441	201562	5751701	28.54	
SLV 10	11	0.24	31.23	-165897	201562	5704565	28.3	
SLV 11	11	0.24	22.86	-121439	201562	4683964	23.24	
SLV 12	11	0.24	22.38	-118896	201562	4614327	22.89	
SLV 13	11	0.24	28.67	-152289	201562	5431687	26.95	
SLV 14	11	0.24	28.24	-150006	201562	5382474	26.7	
SLV 15	11	0.24	26.01	-138189	201562	5112160	25.36	
SLV 16	11	0.24	25.58	-135905	201562	5056886	25.09	

Verifica dei meccanismi locali di collasso con analisi cinematica lineare
accelerazione limite = 92,39; forza di aggancio al piano = 30

combinazione	N top	N base	V orto	alfa0	M*	e*	a0*	
SLV 1	-110643	-170983	2620	0.253	151.899	0.93	198	
SLV 2	-108057	-170410	2605	0.256	149.291	0.93	200	
SLV 3	-95825	-164458	2596	0.269	136.968	0.925	211	
SLV 4	-93240	-163884	2581	0.272	134.368	0.923	214	
SLV 5	-128362	-175429	793	0.25	169.801	0.937	194	
SLV 6	-125482	-174791	776	0.253	166.889	0.936	196	
SLV 7	-78970	-153678	713	0.311	120.052	0.917	246	
SLV 8	-76091	-153039	696	0.316	117.173	0.915	251	
SLV 9	-128606	-172687	-798	0.25	170.048	0.937	194	
SLV 10	-125726	-172049	-815	0.252	167.136	0.936	196	
SLV 11	-79214	-150936	-877	0.309	120.297	0.917	245	
SLV 12	-76335	-150297	-895	0.314	117.417	0.915	249	
SLV 13	-111457	-161843	-2682	0.252	152.72	0.931	197	
SLV 14	-108871	-161269	-2698	0.254	150.111	0.93	199	
SLV 15	-96639	-155317	-2706	0.267	137.787	0.925	210	
SLV 16	-94053	-154744	-2722	0.27	135.186	0.924	213	

Maschio 11
Dati geometrici

X ini.	Y ini.	X fin.	Y fin.	quota i.	quota.s	l	sp.	h netta	h ini.	h fin.	a
680	1522.5	680	805	L1	L2	717.5	100	400	500	500	

Materiale: Muratura in pietrame consolidata con iniezioni LC1
f medio 30
tau 0.9
E 24000
G 8053.69
Fattore di confidenza 1.35

Verifica a pressoflessione per azioni non sismiche 4.5.6.2 D.M. 14-01-08 (N.T.C.) gammaM 3

comb.	quota	N	M	p	es1	es2	ea	ev	e ver (cm)	Ft	Fl	Nu (daN)	
1	500	-114150	501167	1	0	0.37	2	0,00	2,37	0,90	0,98	470317	
1	200	-182202	6372827	1	0	0.37	2	0,00	2,00	0,91	0,85	411710	
1	0	-222541	7933332	1	0	0.37	2	0,00	2,37	0,90	0,84	405145	
2	500	-117427	528749	1	0	0.36	2	0,00	2,36	0,90	0,98	470249	
2	200	-186017	6509240	1	0	0.36	2	0,00	2,00	0,91	0,85	411677	
2	0	-226242	8027802	1	0	0.36	2	0,00	2,36	0,90	0,85	405634	
3	500	-134087	515548	1	0	0.43	2	0,00	2,43	0,90	0,98	470455	
3	200	-202326	6975667	1	0	0.43	2	0,00	2,00	0,91	0,85	412765	
3	0	-241001	8421043	1	0	0.43	2	0,00	2,43	0,90	0,85	405757	
4	500	-137950	482309	1	0	0.46	2	0,00	2,46	0,90	0,98	470588	
4	200	-205500	7039151	1	0	0.46	2	0,00	2,00	0,91	0,85	413237	
4	0	-243626	8495105	1	0	0.46	2	0,00	2,46	0,90	0,85	405397	
5	500	-139588	496100	1	0	0.46	2	0,00	2,46	0,90	0,98	470557	
5	200	-207408	7107358	1	0	0.46	2	0,00	2,00	0,91	0,85	413208	
5	0	-245476	8542340	1	0	0.46	2	0,00	2,46	0,90	0,85	405621	
6	500	-130855	507815	1	0	0.43	2	0,00	2,43	0,90	0,98	470300	
6	200	-199126	6885410	1	0	0.43	2	0,00	2,00	0,91	0,85	412552	
6	0	-238207	8386177	1	0	0.43	2	0,00	2,43	0,90	0,85	405139	
7	500	-134132	535397	1	0	0.42	2	0,00	2,42	0,90	0,98	470242	
7	200	-202942	7021823	1	0	0.42	2	0,00	2,00	0,91	0,85	412505	
7	0	-241908	8480646	1	0	0.42	2	0,00	2,42	0,90	0,85	405596	
8	500	-150791	522197	1	0	0.48	2	0,00	2,48	0,90	0,98	470422	
8	200	-219250	7488250	1	0	0.48	2	0,00	2,00	0,91	0,85	413448	
8	0	-256667	8873887	1	0	0.48	2	0,00	2,48	0,90	0,85	405810	
9	500	-154654	488957	1	0	0.51	2	0,00	2,51	0,90	0,99	470540	
9	200	-222424	7551734	1	0	0.51	2	0,00	2,00	0,91	0,85	413874	
9	0	-259292	8947950	1	0	0.51	2	0,00	2,51	0,90	0,85	405505	
10	500	-156292	502748	1	0	0.5	2	0,00	2,50	0,90	0,99	470513	
10	200	-224332	7619941	1	0	0.5	2	0,00	2,00	0,91	0,85	413842	
10	0	-261142	8995184	1	0	0.5	2	0,00	2,50	0,90	0,85	405713	
11	500	-148396	651517	1	0	0.37	2	0,00	2,37	0,90	0,98	470317	
11	200	-236862	8284675	1	0	0.37	2	0,00	2,00	0,91	0,85	411710	
11	0	-289303	10313332	1	0	0.37	2	0,00	2,37	0,90	0,84	405145	
12	500	-151672	679099	1	0	0.36	2	0,00	2,36	0,90	0,98	470264	
12	200	-240677	8421088	1	0	0.36	2	0,00	2,00	0,91	0,85	411684	
12	0	-293004	10407801	1	0	0.36	2	0,00	2,36	0,90	0,85	405523	
13	500	-168332	665898	1	0	0.42	2	0,00	2,42	0,90	0,98	470427	
13	200	-256986	8887515	1	0	0.42	2	0,00	2,00	0,91	0,85	412541	
13	0	-307764	10801042	1	0	0.42	2	0,00	2,42	0,90	0,85	405613	
14	500	-172195	632659	1	0	0.45	2	0,00	2,45	0,90	0,98	470535	
14	200	-260160	8950999	1	0	0.45	2	0,00	2,00	0,91	0,85	412916	
14	0	-310388	10875105	1	0	0.45	2	0,00	2,45	0,90	0,85	405322	
15	500	-173833	646450	1	0	0.44	2	0,00	2,44	0,90	0,98	470511	
15	200	-262068	9019206	1	0	0.44	2	0,00	2,00	0,91	0,85	412896	
15	0	-312238	10922339	1	0	0.44	2	0,00	2,44	0,90	0,85	405498	
16	500	-165100	658165	1	0	0.42	2	0,00	2,42	0,90	0,98	470304	
16	200	-253787	8797258	1	0	0.42	2	0,00	2,00	0,91	0,85	412371	
16	0	-304969	10766176	1	0	0.42	2	0,00	2,42	0,90	0,85	405130	
17	500	-168377	685747	1	0	0.41	2	0,00	2,41	0,90	0,98	470258	
17	200	-257602	8933671	1	0	0.41	2	0,00	2,00	0,91	0,85	412337	
17	0	-308670	10860646	1	0	0.41	2	0,00	2,41	0,90	0,85	405489	
18	500	-185036	672547	1	0	0.46	2	0,00	2,46	0,90	0,98	470404	
18	200	-273911	9400098	1	0	0.46	2	0,00	2,00	0,91	0,85	413101	
18	0	-323430	11253887	1	0	0.46	2	0,00	2,46	0,90	0,85	405640	
19	500	-188899	639307	1	0	0.48	2	0,00	2,48	0,90	0,99	470501	
19	200	-277085	9463582	1	0	0.48	2	0,00	2,00	0,91	0,85	413447	
19	0	-326054	11327949	1	0	0.48	2	0,00	2,48	0,90	0,85	405386	
20	500	-190538	653098	1	0	0.48	2	0,00	2,48	0,90	0,99	470479	
20	200	-278993	9531789	1	0	0.48	2	0,00	2,00	0,91	0,85	413424	
20	0	-327905	11375184	1	0	0.48	2	0,00	2,48	0,90	0,85	405553	

Verifica a taglio con rottura per fessurazione diagonale per azioni non sismiche Circ.617 C8.7.1.5 gammaM 3

comb.	quota	Vd	N	ftd	b	sigma0	Vu	c.s.	
SLU 1	250	1157	-170696	0.33	1	2.38	68224	58.97	
SLU 1	0	2117	-222541	0.33	1	3.1	76775	36.26	
SLU 2	250	571	-174520	0.33	1	2.43	68891	100	
SLU 2	0	1553	-226242	0.33	1	3.15	77350	49.8	
SLU 3	250	-2104	-191093	0.33	1	2.66	71710	34.09	
SLU 3	0	-1005	-241001	0.33	1	3.36	79599	79.23	
SLU 4	250	-2665	-194373	0.33	1	2.71	72255	27.11	
SLU 4	0	-1537	-243626	0.33	1	3.4	79992	52.04	
SLU 5	250	-2958	-196285	0.33	1	2.74	72571	24.54	
SLU 5	0	-1819	-245476	0.33	1	3.42	80268	44.13	
SLU 6	250	-1078	-187823	0.33	1	2.62	71163	66.02	
SLU 6	0	-17	-238207	0.33	1	3.32	79178	100	
SLU 7	250	-1663	-191647	0.33	1	2.67	71802	43.16	
SLU 7	0	-581	-241908	0.33	1	3.37	79735	100	
SLU 8	250	-4339	-208220	0.33	1	2.9	74511	17.17	
SLU 8	0	-3139	-256667	0.33	1	3.58	81918	26.1	
SLU 9	250	-4900	-211500	0.33	1	2.95	75036	15.31	
SLU 9	0	-3671	-259292	0.33	1	3.61	82301	22.42	
SLU 10	250	-5193	-213411	0.33	1	2.97	75340	14.51	
SLU 10	0	-3953	-261142	0.33	1	3.64	82569	20.89	
SLU 11	250	1504	-221905	0.33	1	3.09	76676	50.98	
SLU 11	0	2752	-289303	0.33	1	4.03	86552	31.45	
SLU 12	250	919	-225729	0.33	1	3.15	77270	84.13	
SLU 12	0	2188	-293004	0.33	1	4.08	87061	39.78	
SLU 13	250	-1757	-242302	0.33	1	3.38	79794	45.42	
SLU 13	0	-370	-307764	0.33	1	4.29	89066	100	
SLU 14	250	-2318	-245582	0.33	1	3.42	80284	34.64	
SLU 14	0	-902	-310388	0.33	1	4.33	89417	99.15	
SLU 15	250	-2611	-247493	0.33	1	3.45	80568	30.86	
SLU 15	0	-1184	-312238	0.33	1	4.35	89664	75.74	
SLU 16	250	-731	-239032	0.33	1	3.33	79302	100	
SLU 16	0	618	-304969	0.33	1	4.25	88690	100	
SLU 17	250	-1316	-242856	0.33	1	3.38	79877	60.68	
SLU 17	0	54	-308670	0.33	1	4.3	89187	100	
SLU 18	250	-3992	-259429	0.33	1	3.62	82321	20.62	

comb.	quota	Vd	N	ftd	b	sigma0	Vu	c.s.	
SLU 18	0	-2503	-323430	0.33	1	4.51	91145	36.41	
SLU 19	250	-4553	-262709	0.33	1	3.66	82796	18.19	
SLU 19	0	-3036	-326054	0.33	1	4.54	91488	30.14	
SLU 20	250	-4845	-264620	0.33	1	3.69	83071	17.14	
SLU 20	0	-3318	-327905	0.33	1	4.57	91730	27.65	

Verifica a pressoflessione nel piano (7.8.2.2) e taglio con rottura per fessurazione diagonale (C8.7.1.5), gammaM = 2

comb.	quota	N	V par	V orto	M	M orto	N/(l*sp)	N/(l'*sp)	Mu	l'	fvd	Vt scorr.	Vt fess.diag.	
SLV 1	0	-226747	27634	-1820	10188922	122394	3.16	3.16	54126222	717.5	0.97	69266	97065	
SLV 1	500	-113953	41844	2786	606064	200058	1.59	1.59	34005984	717.5	0.65	46707	73315	
SLV 2	0	-227810	21227	-1774	9575395	119870	3.18	3.18	54251785	717.5	0.97	69479	97261	
SLV 2	500	-117293	35907	2813	758900	200051	1.63	1.63	34795519	717.5	0.66	47375	74128	
SLV 3	0	-233308	369	-1735	6291874	116739	3.25	3.25	54882006	717.5	0.98	70578	98270	
SLV 3	500	-129821	17654	2612	1520775	193651	1.81	1.81	37650873	717.5	0.7	49881	77100	
SLV 4	0	-234371	-6037	-1688	5678347	114215	3.27	3.27	55000183	717.5	0.99	70791	98464	
SLV 4	500	-133162	11718	2639	1673610	193644	1.86	1.86	38384274	717.5	0.7	50549	77873	
SLV 5	0	-223682	52222	139	15060101	12201	3.12	3.12	53757487	717.5	0.96	68653	96497	
SLV 5	500	-99792	63916	831	-916388	62804	1.39	1.39	30528268	717.5	0.61	43875	69764	
SLV 6	0	-224866	45088	190	14376855	9390	3.13	3.13	53901086	717.5	0.96	68890	96716	
SLV 6	500	-103513	57305	861	-746185	62796	1.44	1.44	31462559	717.5	0.62	44619	70714	
SLV 7	0	-245552	-38660	425	2069942	-6650	3.42	3.42	56170497	717.5	1.02	73027	100480	
SLV 7	500	-152687	-16715	250	2132646	41448	2.13	2.13	42434120	717.5	0.76	54454	82248	
SLV 8	0	-246736	-45794	476	1386696	-9461	3.44	3.44	56286678	717.5	1.02	73264	100691	
SLV 8	500	-156408	-23325	280	2302849	41439	2.18	2.18	43160037	717.5	0.77	55198	83055	
SLV 9	0	-227667	45722	1906	15308470	-88029	3.17	3.17	54234939	717.5	0.97	69450	97235	
SLV 9	500	-103686	58357	-1018	-1299194	-61249	1.45	1.45	31505654	717.5	0.62	44654	70758	
SLV 10	0	-228851	38587	1957	14625224	-90840	3.19	3.19	54373541	717.5	0.97	69687	97453	
SLV 10	500	-107406	51746	-988	-1128991	-61258	1.5	1.5	32424606	717.5	0.63	45398	71695	
SLV 11	0	-249538	-45161	2192	2318311	-106880	3.48	3.48	56555659	717.5	1.03	73824	101189	
SLV 11	500	-156581	-22274	-1600	1749840	-82606	2.18	2.18	43193441	717.5	0.77	55233	83092	
SLV 12	0	-250722	-52295	2244	1635065	-109691	3.49	3.49	56666844	717.5	1.03	74061	101398	
SLV 12	500	-160301	-28884	-1570	1920043	-82614	2.23	2.23	43904020	717.5	0.78	55977	83892	
SLV 13	0	-240032	5965	4070	11016819	-211705	3.35	3.35	55609207	717.5	1	71923	99489	
SLV 13	500	-126931	23313	-3378	-669955	-213454	1.77	1.77	37006918	717.5	0.69	49303	76424	
SLV 14	0	-241095	-442	4117	10403292	-214229	3.36	3.36	55719815	717.5	1.01	72136	99681	
SLV 14	500	-130272	17377	-3351	-517120	-213461	1.82	1.82	37750542	717.5	0.7	49971	77204	
SLV 15	0	-246593	-21300	4156	7119771	-217360	3.44	3.44	56272702	717.5	1.02	73235	100665	
SLV 15	500	-142800	-876	-3552	244755	-219861	1.99	1.99	40433742	717.5	0.73	52477	80062	
SLV 16	0	-247656	-27707	4202	6506245	-219884	3.45	3.45	56375925	717.5	1.02	73448	100855	
SLV 16	500	-146141	-6812	-3525	397590	-219868	2.04	2.04	41121234	717.5	0.74	53145	80807	

Verifica a pressoflessione fuori piano D.M. 14-01-08 (N.T.C.)
quota 200 Ta 0 Wa 0.22 denominatore 8

comb.	fd	Sa	x	N	M	Mc	c.s.	
SLV 1	11	0.24	27.41	-185729	257103	6741196	26.22	
SLV 2	11	0.24	27.85	-188755	257103	6808893	26.48	
SLV 3	11	0.24	29.65	-200924	257103	7067440	27.49	
SLV 4	11	0.24	30.1	-203950	257103	7128351	27.73	
SLV 5	11	0.24	25.11	-170143	257103	6371153	24.78	
SLV 6	11	0.24	25.61	-173513	257103	6454210	25.1	
SLV 7	11	0.24	32.58	-220793	257103	7442628	28.95	
SLV 8	11	0.24	33.08	-224163	257103	7500493	29.17	
SLV 9	11	0.24	25.4	-172126	257103	6420218	24.97	
SLV 10	11	0.24	25.9	-175496	257103	6502288	25.29	
SLV 11	11	0.24	32.88	-222775	257103	7476873	29.08	
SLV 12	11	0.24	33.37	-226146	257103	7533752	29.3	
SLV 13	11	0.24	28.38	-192338	257103	6887287	26.79	
SLV 14	11	0.24	28.83	-195365	257103	6952033	27.04	
SLV 15	11	0.24	30.63	-207533	257103	7198711	28	
SLV 16	11	0.24	31.07	-210560	257103	7256670	28.22	

Verifica dei meccanismi locali di collasso con analisi cinematica lineare
accelerazione limite = 92,39; forza di aggancio al piano = 30

combinazione	N top	N base	V orto	alfa0	M*	e*	a0*	
SLV 1	-113953	-226747	2786	0.281	166.39	0.922	221	
SLV 2	-117293	-227810	2813	0.277	169.746	0.923	218	
SLV 3	-129821	-233308	2612	0.267	182.352	0.927	209	
SLV 4	-133162	-234371	2639	0.264	185.718	0.928	206	
SLV 5	-99792	-223682	831	0.313	152.195	0.916	248	
SLV 6	-103513	-224866	861	0.307	155.919	0.918	243	
SLV 7	-152687	-245552	250	0.262	205.424	0.934	204	
SLV 8	-156408	-246736	280	0.259	209.184	0.935	201	
SLV 9	-103686	-227667	-1018	0.306	156.092	0.918	242	
SLV 10	-107406	-228851	-988	0.301	159.82	0.919	238	
SLV 11	-156581	-249538	-1600	0.252	209.359	0.935	196	
SLV 12	-160301	-250722	-1570	0.25	213.12	0.936	194	
SLV 13	-126931	-240032	-3378	0.264	179.441	0.926	207	
SLV 14	-130272	-241095	-3351	0.262	182.806	0.927	205	
SLV 15	-142800	-246593	-3552	0.251	195.439	0.931	196	
SLV 16	-146141	-247656	-3525	0.248	198.812	0.932	194	

Maschio 12
Dati geometrici

X ini.	Y ini.	X fin.	Y fin.	quota i.	quota.s	l	sp.	h netta	h ini.	h fin.	a
390	142.5	780	142.5	L1	L2	390	85	400	500	500	

Materiale: Muratura in pietrame consolidata con iniezioni LC1
f medio 30
tau 0.9
E 24000
G 8053.69
Fattore di confidenza 1.35

Verifica a pressoflessione per azioni non sismiche 4.5.6.2 D.M. 14-01-08 (N.T.C.) gammaM 3

comb.	quota	N	M	p	es1	es2	ea	ev	e ver (cm)	Ft	Fl	Nu (daN)	
1	500	-45154	911758	1	-7.77	0	2	0,00	9,77	0,65	0,84	134098	
1	200	-72600	-963306	1	-7.77	0	2	0,00	4,88	0,79	0,89	173938	
1	0	-86772	1329172	1	-7.77	0	2	0,00	9,77	0,65	0,88	140334	
2	500	-46126	928909	1	-7.77	0	2	0,00	9,77	0,65	0,84	134160	
2	200	-73883	-990751	1	-7.77	0	2	0,00	4,89	0,79	0,89	173713	
2	0	-88179	1360444	1	-7.77	0	2	0,00	9,77	0,65	0,88	140186	
3	500	-47724	952751	1	-7.72	0	2	0,00	9,72	0,65	0,84	134624	
3	200	-77168	-1016002	1	-7.72	0	2	0,00	4,86	0,79	0,89	174301	
3	0	-92632	1500704	1	-7.72	0	2	0,00	9,72	0,65	0,87	139448	
4	500	-47436	945818	1	-7.7	0	2	0,00	9,70	0,65	0,84	134768	
4	200	-77294	-999378	1	-7.7	0	2	0,00	4,85	0,79	0,90	174767	
4	0	-93134	1529544	1	-7.7	0	2	0,00	9,70	0,65	0,87	139278	
5	500	-47922	954394	1	-7.7	0	2	0,00	9,70	0,65	0,84	134791	
5	200	-77935	-1013100	1	-7.7	0	2	0,00	4,85	0,79	0,90	174653	
5	0	-93838	1545180	1	-7.7	0	2	0,00	9,70	0,65	0,87	139215	
6	500	-48221	966872	1	-7.73	0	2	0,00	9,73	0,65	0,84	134443	
6	200	-77090	-1009774	1	-7.73	0	2	0,00	4,87	0,79	0,90	174345	
6	0	-92086	1476383	1	-7.73	0	2	0,00	9,73	0,65	0,87	139590	
7	500	-49194	984022	1	-7.74	0	2	0,00	9,74	0,65	0,84	134494	
7	200	-78372	-1037219	1	-7.74	0	2	0,00	4,87	0,79	0,89	174125	
7	0	-93493	1507655	1	-7.74	0	2	0,00	9,74	0,65	0,87	139461	
8	500	-50791	1007864	1	-7.69	0	2	0,00	9,69	0,65	0,84	134920	
8	200	-81658	-1062469	1	-7.69	0	2	0,00	4,84	0,79	0,90	174665	
8	0	-97947	1647915	1	-7.69	0	2	0,00	9,69	0,65	0,87	138793	
9	500	-50504	1000932	1	-7.67	0	2	0,00	9,67	0,65	0,84	135057	
9	200	-81783	-1045845	1	-7.67	0	2	0,00	4,83	0,79	0,90	175106	
9	0	-98449	1676755	1	-7.67	0	2	0,00	9,67	0,65	0,86	138636	
10	500	-50990	1009507	1	-7.67	0	2	0,00	9,67	0,65	0,84	135076	
10	200	-82424	-1059568	1	-7.67	0	2	0,00	4,83	0,79	0,90	174994	
10	0	-99152	1692391	1	-7.67	0	2	0,00	9,67	0,65	0,86	138581	
11	500	-58700	1185286	1	-7.77	0	2	0,00	9,77	0,65	0,84	134098	
11	200	-94380	-1252298	1	-7.77	0	2	0,00	4,88	0,79	0,89	173938	
11	0	-112803	1727923	1	-7.77	0	2	0,00	9,77	0,65	0,88	140334	
12	500	-59672	1202436	1	-7.77	0	2	0,00	9,77	0,65	0,84	134146	
12	200	-95663	-1279743	1	-7.77	0	2	0,00	4,89	0,79	0,89	173764	
12	0	-114210	1759195	1	-7.77	0	2	0,00	9,77	0,65	0,88	140220	
13	500	-61270	1226278	1	-7.73	0	2	0,00	9,73	0,65	0,84	134508	
13	200	-98948	-1304993	1	-7.73	0	2	0,00	4,87	0,79	0,89	174221	
13	0	-118664	1899456	1	-7.73	0	2	0,00	9,73	0,65	0,87	139642	
14	500	-60982	1219346	1	-7.71	0	2	0,00	9,71	0,65	0,84	134619	
14	200	-99074	-1288369	1	-7.71	0	2	0,00	4,86	0,79	0,90	174584	
14	0	-119166	1928295	1	-7.71	0	2	0,00	9,71	0,65	0,87	139508	
15	500	-61468	1227921	1	-7.71	0	2	0,00	9,71	0,65	0,84	134638	
15	200	-99715	-1302092	1	-7.71	0	2	0,00	4,86	0,79	0,90	174496	
15	0	-119869	1943931	1	-7.71	0	2	0,00	9,71	0,65	0,87	139458	
16	500	-61767	1240399	1	-7.74	0	2	0,00	9,74	0,65	0,84	134367	
16	200	-98870	-1298766	1	-7.74	0	2	0,00	4,87	0,79	0,89	174256	
16	0	-118118	1875135	1	-7.74	0	2	0,00	9,74	0,65	0,87	139754	
17	500	-62740	1257550	1	-7.74	0	2	0,00	9,74	0,65	0,84	134409	
17	200	-100152	-1326211	1	-7.74	0	2	0,00	4,87	0,79	0,89	174085	
17	0	-119525	1906406	1	-7.74	0	2	0,00	9,74	0,65	0,87	139651	
18	500	-64337	1281392	1	-7.71	0	2	0,00	9,71	0,65	0,84	134747	
18	200	-103438	-1351461	1	-7.71	0	2	0,00	4,85	0,79	0,90	174512	
18	0	-123978	2046667	1	-7.71	0	2	0,00	9,71	0,65	0,87	139118	
19	500	-64050	1274459	1	-7.69	0	2	0,00	9,69	0,65	0,84	134854	
19	200	-103563	-1334837	1	-7.69	0	2	0,00	4,84	0,79	0,90	174859	
19	0	-124480	2075507	1	-7.69	0	2	0,00	9,69	0,65	0,87	138991	
20	500	-64536	1283035	1	-7.69	0	2	0,00	9,69	0,65	0,84	134871	
20	200	-104204	-1348560	1	-7.69	0	2	0,00	4,84	0,79	0,90	174773	
20	0	-125184	2091143	1	-7.69	0	2	0,00	9,69	0,65	0,87	138946	

Verifica a taglio con rottura per fessurazione diagonale per azioni non sismiche Circ.617 C8.7.1.5 gammaM 3

comb.	quota	Vd	N	ftd	b	sigma0	Vu	c.s.	
SLU 1	250	-2839	-69791	0.33	1.03	2.11	29141	10.26	
SLU 1	100	-2905	-80547	0.33	1.03	2.43	31019	10.68	
SLU 2	250	-2997	-71035	0.33	1.03	2.14	29364	9.8	
SLU 2	100	-3064	-81978	0.33	1.03	2.47	31260	10.2	
SLU 3	250	-3465	-74074	0.33	1.03	2.23	29903	8.63	
SLU 3	100	-3534	-86018	0.33	1.03	2.59	31932	9.03	
SLU 4	250	-3507	-74132	0.33	1.03	2.24	29913	8.53	
SLU 4	100	-3577	-86318	0.33	1.03	2.6	31981	8.94	
SLU 5	250	-3586	-74754	0.33	1.03	2.26	30022	8.37	
SLU 5	100	-3656	-87034	0.33	1.03	2.63	32098	8.78	
SLU 6	250	-3155	-74106	0.33	1.03	2.24	29908	9.48	
SLU 6	100	-3224	-85621	0.33	1.03	2.58	31866	9.88	
SLU 7	250	-3313	-75351	0.33	1.03	2.27	30126	9.09	
SLU 7	100	-3384	-87052	0.33	1.03	2.63	32101	9.49	
SLU 8	250	-3780	-78389	0.33	1.03	2.36	30651	8.11	
SLU 8	100	-3854	-91092	0.33	1.03	2.75	32756	8.5	
SLU 9	250	-3823	-78447	0.33	1.03	2.37	30661	8.02	
SLU 9	100	-3896	-91392	0.33	1.03	2.76	32804	8.42	
SLU 10	250	-3902	-79070	0.33	1.03	2.39	30768	7.89	
SLU 10	100	-3976	-92108	0.33	1.03	2.78	32918	8.28	
SLU 11	250	-3691	-90728	0.33	1.03	2.74	32697	8.86	
SLU 11	100	-3776	-104711	0.33	1.03	3.16	34871	9.23	
SLU 12	250	-3849	-91972	0.33	1.03	2.77	32897	8.55	
SLU 12	100	-3936	-106142	0.33	1.03	3.2	35086	8.91	
SLU 13	250	-4316	-95011	0.33	1.03	2.87	33378	7.73	
SLU 13	100	-4406	-110182	0.33	1.03	3.32	35686	8.1	
SLU 14	250	-4359	-95069	0.33	1.03	2.87	33387	7.66	
SLU 14	100	-4448	-110483	0.33	1.03	3.33	35730	8.03	
SLU 15	250	-4438	-95691	0.33	1.03	2.89	33485	7.55	
SLU 15	100	-4528	-111198	0.33	1.03	3.35	35835	7.91	
SLU 16	250	-4007	-95043	0.33	1.03	2.87	33383	8.33	
SLU 16	100	-4096	-109785	0.33	1.03	3.31	35627	8.7	
SLU 17	250	-4165	-96288	0.33	1.03	2.9	33579	8.06	
SLU 17	100	-4255	-111216	0.33	1.03	3.35	35838	8.42	
SLU 18	250	-4632	-99327	0.33	1.03	3	34051	7.35	

comb.	quota	Vd	N	ftd	b	sigma0	Vu	c.s.	
SLU 18	100	-4725	-115256	0.33	1.03	3.48	36425	7.71	
SLU 19	250	-4675	-99385	0.33	1.03	3	34060	7.29	
SLU 19	100	-4767	-115556	0.33	1.03	3.49	36468	7.65	
SLU 20	250	-4753	-100007	0.33	1.03	3.02	34155	7.19	
SLU 20	100	-4847	-116272	0.33	1.03	3.51	36571	7.54	

Verifica a pressoflessione nel piano (7.8.2.2) e taglio con rottura per fessurazione diagonale (C8.7.1.5), gammaM = 2

comb.	quota	N	V par	V orto	M	M orto	N/(l*sp)	N/(l'*sp)	Mu	l'	fvd	Vt scorr.	Vt fess.diag.	
SLV 1	0	-102134	-13655	-1081	-1310677	69950	3.08	3.08	13419089	390	0.95	31477	43249	
SLV 1	500	-53878	-8158	6955	964439	356258	1.63	1.63	8698223	390	0.66	21826	33318	
SLV 2	0	-101525	-15622	-1027	-1955869	67212	3.06	3.06	13377589	390	0.95	31355	43138	
SLV 2	500	-56138	-10101	7121	956118	367500	1.69	1.69	8984021	390	0.67	22278	33848	
SLV 3	0	-90038	-12532	-421	-1706675	21988	2.72	2.72	12508207	390	0.88	29058	40986	
SLV 3	500	-54089	-6567	5084	863877	297610	1.63	1.63	8725196	390	0.66	21868	33368	
SLV 4	0	-89430	-14499	-367	-2351867	19250	2.7	2.7	12457532	390	0.87	28936	40869	
SLV 4	500	-56349	-8509	5249	855556	308853	1.7	1.7	9010400	390	0.67	22320	33897	
SLV 5	0	-113344	-2640	-1907	1497041	115424	3.42	3.42	14100565	390	1.02	33719	45245	
SLV 5	500	-48283	-1278	8190	1113954	382843	1.46	1.46	7963149	390	0.62	20707	31968	
SLV 6	0	-112666	-4831	-1847	778532	112376	3.4	3.4	14063789	390	1.01	33583	45126	
SLV 6	500	-50799	-3441	8375	1104688	395363	1.53	1.53	8298561	390	0.64	21210	32582	
SLV 7	0	-73026	1103	292	177047	-44450	2.2	2.2	10918569	390	0.77	25655	37574	
SLV 7	500	-48986	4027	1951	778748	187352	1.48	1.48	8057748	390	0.63	20847	32141	
SLV 8	0	-72348	-1088	352	-541463	-47498	2.18	2.18	10847735	390	0.77	25520	37432	
SLV 8	500	-51503	1864	2136	769481	199872	1.55	1.55	8390955	390	0.64	21351	32752	
SLV 9	0	-110827	7828	-1953	3476237	106307	3.34	3.34	13961199	390	1	33215	44804	
SLV 9	500	-43808	6116	7385	1141144	347531	1.32	1.32	7347211	390	0.6	19812	30845	
SLV 10	0	-110149	5637	-1893	2757727	103258	3.32	3.32	13922297	390	1	33080	44685	
SLV 10	500	-46324	3953	7569	1131877	360050	1.4	1.4	7696651	390	0.61	20315	31481	
SLV 11	0	-70509	11571	247	2156242	-53567	2.13	2.13	10652809	390	0.76	25152	37043	
SLV 11	500	-44512	11421	1146	805937	152040	1.34	1.34	7445734	390	0.6	19952	31024	
SLV 12	0	-69831	9380	307	1437733	-56616	2.11	2.11	10579849	390	0.75	25016	36898	
SLV 12	500	-47028	9258	1331	796671	164559	1.42	1.42	7792968	390	0.62	20456	31657	
SLV 13	0	-93745	21239	-1233	5286641	39558	2.83	2.83	12806715	390	0.9	29799	41693	
SLV 13	500	-38962	16489	4271	1055069	238550	1.18	1.18	6652061	390	0.57	18842	29582	
SLV 14	0	-93136	19272	-1180	4641449	36821	2.81	2.81	12758851	390	0.9	29677	41577	
SLV 14	500	-41221	14547	4437	1046748	249792	1.24	1.24	6979845	390	0.58	19294	30177	
SLV 15	0	-81650	22361	-573	4890643	-8404	2.46	2.46	11769438	390	0.83	27380	39341	
SLV 15	500	-39173	18081	2400	954507	179903	1.18	1.18	6682957	390	0.57	18885	29638	
SLV 16	0	-81041	20394	-520	4245451	-11142	2.44	2.44	11712400	390	0.82	27258	39219	
SLV 16	500	-41433	16138	2565	946186	191145	1.25	1.25	7010147	390	0.58	19337	30232	

Verifica a pressoflessione fuori piano D.M. 14-01-08 (N.T.C.)
quota 200 Ta 0 Wa 0.19 denominatore 8

comb.	fd	Sa	x	N	M	Mc	c.s.	
SLV 1	11	0.24	26.5	-97598	118787	2854875	24.03	
SLV 2	11	0.24	27.58	-101577	118787	2916410	24.55	
SLV 3	11	0.24	24.62	-90702	118787	2738059	23.05	
SLV 4	11	0.24	25.71	-94681	118787	2807045	23.63	
SLV 5	11	0.24	24.89	-91692	118787	2755631	23.2	
SLV 6	11	0.24	26.1	-96124	118787	2830992	23.83	
SLV 7	11	0.24	18.65	-68704	118787	2279175	19.19	
SLV 8	11	0.24	19.86	-73136	118787	2382195	20.05	
SLV 9	11	0.24	21.7	-79927	118787	2529714	21.3	
SLV 10	11	0.24	22.9	-84359	118787	2619230	22.05	
SLV 11	11	0.24	15.46	-56940	118787	1979836	16.67	
SLV 12	11	0.24	16.66	-61372	118787	2097010	17.65	
SLV 13	11	0.24	15.85	-58383	118787	2018566	16.99	
SLV 14	11	0.24	16.93	-62362	118787	2122469	17.87	
SLV 15	11	0.24	13.98	-51486	118787	1828328	15.39	
SLV 16	11	0.24	15.06	-55466	118787	1939682	16.33	

Verifica dei meccanismi locali di collasso con analisi cinematica lineare
accelerazione limite = 92,39; forza di aggancio al piano = 30

combinazione	N top	N base	V orto	alfa0	M*	e*	a0*	
SLV 1	-53878	-102134	6955	0.198	78.111	0.923	156	
SLV 2	-56138	-101525	7121	0.193	80.383	0.924	152	
SLV 3	-54089	-90038	5084	0.225	78.323	0.923	177	
SLV 4	-56349	-89430	5249	0.219	80.595	0.924	172	
SLV 5	-48283	-113344	8190	0.187	72.496	0.918	148	
SLV 6	-50799	-112666	8375	0.181	75.019	0.92	143	
SLV 7	-48986	-73026	1951	0.284	73.201	0.919	225	
SLV 8	-51503	-72348	2136	0.274	75.725	0.921	217	
SLV 9	-43808	-110827	7385	0.207	68.02	0.914	164	
SLV 10	-46324	-110149	7569	0.2	70.535	0.917	158	
SLV 11	-44512	-70509	1146	0.311	68.723	0.915	247	
SLV 12	-47028	-69831	1331	0.3	71.24	0.917	237	
SLV 13	-38962	-93745	4271	0.274	63.191	0.91	219	
SLV 14	-41221	-93136	4437	0.264	65.44	0.912	210	
SLV 15	-39173	-81650	2400	0.308	63.401	0.91	246	
SLV 16	-41433	-81041	2565	0.297	65.65	0.912	237	

Maschio 13
Dati geometrici

X ini.	Y ini.	X fin.	Y fin.	quota i.	quota.s	l	sp.	h netta	h ini.	h fin.	a
900	610	340	610	L1	L2	560	45	400	500	500	

Materiale: Muratura in pietrame consolidata con iniezioni LC1
f medio 30
tau 0.9
E 24000
G 8053.69
Fattore di confidenza 1.35

Rinforzo con rete e betoncino sulla faccia destra
Betoncino: C25/30
spessore: 3
acciaio materiale: B450C
BARRE VERTICALI
diametro (mm) 5
passo 20
ancorate ad entrambe le estremità
BARRE ORIZZONTALI
diametro (mm) 5
passo 20
ancorate ad entrambe le estremità

Verifica a pressoflessione nel piano e taglio delle sezioni rinforzate 7.8.3.2 D.M. 14-01-08 (N.T.C.)

comb.	quota sezione	gamma m.	gamma s.	gamma c.	N	V	V orto	M	M orto	c.s.	d	fvd	Vt,c	Vt,M	Vt,S
SLU 1	0	3	1.15	1.5	-93485	767	-40	644011	1755	4.87	560	0.4	56000	10137	12908
SLU 1	500	3	1.15	1.5	-49846	-4539	-5	-155615	-103	9.13	560	0.32	56000	8019	12908
SLU 2	0	3	1.15	1.5	-95405	961	-41	695324	1780	4.77	560	0.41	56000	10231	12908
SLU 2	500	3	1.15	1.5	-51614	-4549	-5	-180251	-109	8.82	560	0.32	56000	8105	12908
SLU 3	0	3	1.15	1.5	-101041	1329	-43	762887	1871	4.51	560	0.42	56000	10504	12908
SLU 3	500	3	1.15	1.5	-55581	-4701	-5	-227222	-119	8.19	560	0.33	56000	8298	12908
SLU 4	0	3	1.15	1.5	-101536	1294	-43	740530	1885	4.48	560	0.42	56000	10528	12908
SLU 4	500	3	1.15	1.5	-55512	-4756	-5	-222716	-117	8.2	560	0.33	56000	8294	12908
SLU 5	0	3	1.15	1.5	-102496	1391	-43	766187	1898	4.44	560	0.42	56000	10575	12908
SLU 5	500	3	1.15	1.5	-56397	-4761	-5	-235034	-120	8.07	560	0.33	56000	8337	12908
SLU 6	0	3	1.15	1.5	-99685	1015	-43	711963	1863	4.57	560	0.41	56000	10438	12908
SLU 6	500	3	1.15	1.5	-54279	-4800	-5	-177399	-104	8.39	560	0.33	56000	8235	12908
SLU 7	0	3	1.15	1.5	-101605	1208	-43	763276	1888	4.48	560	0.42	56000	10532	12908
SLU 7	500	3	1.15	1.5	-56047	-4810	-5	-202035	-111	8.12	560	0.33	56000	8320	12908
SLU 8	0	3	1.15	1.5	-107241	1577	-45	830839	1979	4.25	560	0.43	56000	10805	12908
SLU 8	500	3	1.15	1.5	-60013	-4962	-5	-249005	-121	7.59	560	0.34	56000	8513	12908
SLU 9	0	3	1.15	1.5	-107736	1542	-45	808482	1993	4.23	560	0.43	56000	10829	12908
SLU 9	500	3	1.15	1.5	-59945	-5017	-5	-244499	-119	7.6	560	0.34	56000	8510	12908
SLU 10	0	3	1.15	1.5	-108696	1638	-45	834138	2006	4.19	560	0.43	56000	10876	12908
SLU 10	500	3	1.15	1.5	-60829	-5022	-5	-256817	-122	7.48	560	0.34	56000	8552	12908
SLU 11	0	3	1.15	1.5	-121530	997	-52	837215	2281	3.75	560	0.46	56000	11499	12908
SLU 11	500	3	1.15	1.5	-64800	-5901	-7	-202300	-134	7.03	560	0.35	56000	8745	12908
SLU 12	0	3	1.15	1.5	-123450	1191	-53	888527	2306	3.69	560	0.46	56000	11592	12908
SLU 12	500	3	1.15	1.5	-66568	-5911	-7	-226936	-140	6.84	560	0.35	56000	8831	12908
SLU 13	0	3	1.15	1.5	-129086	1559	-55	956091	2398	3.53	560	0.47	56000	11865	12908
SLU 13	500	3	1.15	1.5	-70534	-6063	-7	-273906	-150	6.46	560	0.36	56000	9024	12908
SLU 14	0	3	1.15	1.5	-129582	1524	-55	933734	2412	3.51	560	0.47	56000	11889	12908
SLU 14	500	3	1.15	1.5	-70466	-6117	-7	-269401	-148	6.46	560	0.36	56000	9020	12908
SLU 15	0	3	1.15	1.5	-130542	1621	-55	959390	2424	3.49	560	0.47	56000	11936	12908
SLU 15	500	3	1.15	1.5	-71350	-6122	-7	-281719	-151	6.38	560	0.36	56000	9063	12908
SLU 16	0	3	1.15	1.5	-127730	1245	-55	905166	2389	3.56	560	0.47	56000	11800	12908
SLU 16	500	3	1.15	1.5	-69232	-6162	-7	-224083	-135	6.58	560	0.36	56000	8960	12908
SLU 17	0	3	1.15	1.5	-129650	1438	-55	956479	2414	3.51	560	0.47	56000	11893	12908
SLU 17	500	3	1.15	1.5	-71001	-6172	-7	-248719	-142	6.41	560	0.36	56000	9046	12908
SLU 18	0	3	1.15	1.5	-135286	1807	-57	1024042	2506	3.37	560	0.48	56000	12166	12908
SLU 18	500	3	1.15	1.5	-74967	-6324	-7	-295690	-152	6.07	560	0.37	56000	9239	12908
SLU 19	0	3	1.15	1.5	-135782	1772	-57	1001685	2520	3.35	560	0.48	56000	12190	12908
SLU 19	500	3	1.15	1.5	-74899	-6378	-7	-291184	-150	6.08	560	0.37	56000	9235	12908
SLU 20	0	3	1.15	1.5	-136742	1868	-58	1027342	2532	3.33	560	0.49	56000	12237	12908
SLU 20	500	3	1.15	1.5	-75783	-6384	-7	-303502	-153	6.01	560	0.37	56000	9278	12908

Verifica a pressoflessione nel piano e taglio delle sezioni rinforzate 7.8.3.2 D.M. 14-01-08 (N.T.C.)

comb.	quota sezione	gamma m.	gamma s.	gamma c.	N	V	V orto	M	M orto	c.s.	d	fvd	Vt,c	Vt,M	Vt,S
SLV 1	0	2	1.15	1.5	-107904	25997	367	6563203	-25226	4.27	530	0.66	79500	15806	12216
SLV 1	500	2	1.15	1.5	-54413	9496	-829	45892	-27187	9.74	560	0.49	84000	12362	12908
SLV 2	0	2	1.15	1.5	-107451	27056	363	6707532	-25009	4.25	530	0.66	79500	15773	12216
SLV 2	500	2	1.15	1.5	-53465	10103	-830	7615	-27194	9.91	560	0.49	84000	12293	12908
SLV 3	0	2	1.15	1.5	-103714	25902	-352	6350507	45456	4.43	530	0.65	79500	15501	12216
SLV 3	500	2	1.15	1.5	-50419	9485	392	24327	19554	10.51	560	0.48	84000	12071	12908
SLV 4	0	2	1.15	1.5	-103261	26961	-356	6494836	45673	4.41	530	0.65	79500	15468	12216
SLV 4	500	2	1.15	1.5	-49470	10091	391	-13950	19547	10.71	560	0.48	84000	12002	12908
SLV 5	0	2	1.15	1.5	-108371	8240	1172	2728865	-113561	4.89	560	0.65	84000	16290	12908
SLV 5	500	2	1.15	1.5	-60522	-710	-2104	-66445	-79119	8.76	560	0.51	84000	12806	12908
SLV 6	0	2	1.15	1.5	-107867	9419	1168	2889595	-113319	4.91	560	0.64	84000	16253	12908
SLV 6	500	2	1.15	1.5	-59466	-35	-2105	-109070	-79126	8.91	560	0.51	84000	12729	12908
SLV 7	0	2	1.15	1.5	-94403	7921	-1224	2019879	122047	5.61	560	0.61	84000	15273	12908
SLV 7	500	2	1.15	1.5	-47207	-748	1966	-138328	76685	11.23	560	0.47	84000	11837	12908
SLV 8	0	2	1.15	1.5	-93899	9101	-1228	2180609	122289	5.64	560	0.6	84000	15236	12908
SLV 8	500	2	1.15	1.5	-46151	-72	1965	-180953	76677	11.48	560	0.47	84000	11760	12908
SLV 9	0	2	1.15	1.5	-104558	-7025	1143	-763377	-118584	5.07	560	0.64	84000	16012	12908
SLV 9	500	2	1.15	1.5	-61718	-9440	-1975	-186162	-76891	8.59	560	0.51	84000	12893	12908
SLV 10	0	2	1.15	1.5	-104054	-5846	1139	-602647	-118342	5.09	560	0.63	84000	15976	12908
SLV 10	500	2	1.15	1.5	-60662	-8765	-1977	-228788	-76898	8.74	560	0.51	84000	12816	12908
SLV 11	0	2	1.15	1.5	-90590	-7343	-1252	-1472363	117025	5.85	560	0.6	84000	14995	12908
SLV 11	500	2	1.15	1.5	-48402	-9478	2095	-258045	78913	10.95	560	0.47	84000	11924	12908
SLV 12	0	2	1.15	1.5	-90086	-6164	-1257	-1311633	117267	5.88	560	0.59	84000	14959	12908
SLV 12	500	2	1.15	1.5	-47346	-8803	2093	-300671	78905	11.19	560	0.47	84000	11847	12908
SLV 13	0	2	1.15	1.5	-95196	-24885	271	-5077604	-41968	5.57	560	0.61	84000	15331	12908
SLV 13	500	2	1.15	1.5	-58398	-19604	-401	-353166	-19761	9.08	560	0.5	84000	12652	12908
SLV 14	0	2	1.15	1.5	-94743	-23826	267	-4933275	-41751	5.59	560	0.61	84000	15298	12908
SLV 14	500	2	1.15	1.5	-57450	-18998	-402	-391442	-19768	9.22	560	0.5	84000	12583	12908
SLV 15	0	2	1.15	1.5	-91006	-24981	-448	-5290300	28715	5.82	0	0	0	0	0
SLV 15	500	2	1.15	1.5	-54404	-19615	820	-374731	26980	9.74	560	0.49	84000	12361	12908
SLV 16	0	2	1.15	1.5	-90553	-23922	-451	-5145971	28932	5.85	560	0.59	84000	14993	12908
SLV 16	500	2	1.15	1.5	-53455	-19009	819	-413007	26973	9.91	560	0.49	84000	12292	12908

Per la verifica a pressoflessione fuori piano non é stato considerato il rinforzo predisposto.
Le motivazioni per cui la sezione di verifica nonostante abbia un rinforzo di tipo FRP non venga condotta come sezione rinforzata possono essere:
- Il rinforzo predisposto non è atto ad essere utilizzato per queste tipologie di verifiche.

- Non sono stati predisposti rinforzi di tipo rete e betoncino oppure FRP sia orizzontali che verticali.
- Non sono stati predisposti rinforzi di tipo rete e betoncino oppure FRP su entrambi i lati.

Verifica a pressoflessione fuori piano D.M. 14-01-08 (N.T.C.)
quota 200 Ta 0 Wa 0.1 denominatore 8

comb.	fd	Sa	x	N	M	Mc	c.s.	
SLV 1	11	0.24	17.42	-92140	90300	1270542	14.07	
SLV 2	11	0.24	17.31	-91529	90300	1267405	14.04	
SLV 3	11	0.24	16.56	-87609	90300	1245595	13.79	
SLV 4	11	0.24	16.45	-86999	90300	1241935	13.75	
SLV 5	11	0.24	17.55	-92833	90300	1274017	14.11	
SLV 6	11	0.24	17.42	-92152	90300	1270607	14.07	
SLV 7	11	0.24	14.7	-77732	90300	1177749	13.04	
SLV 8	11	0.24	14.57	-77052	90300	1172398	12.98	
SLV 9	11	0.24	16.8	-88867	90300	1252908	13.88	
SLV 10	11	0.24	16.67	-88186	90300	1248989	13.83	
SLV 11	11	0.24	13.95	-73766	90300	1145318	12.68	
SLV 12	11	0.24	13.82	-73086	90300	1139457	12.62	
SLV 13	11	0.24	14.92	-78920	90300	1186885	13.14	
SLV 14	11	0.24	14.81	-78309	90300	1182221	13.09	
SLV 15	11	0.24	14.07	-74390	90300	1150615	12.74	
SLV 16	11	0.24	13.95	-73779	90300	1145428	12.68	

Per la verifica seguente non si considerano i rinforzi predisposti.

Verifica dei meccanismi locali di collasso con analisi cinematica lineare
accelerazione limite = 92,39; forza di aggancio al piano = 30

combinazione	N top	N base	V orto	alfa0	M*	e*	a0*	
SLV 1	-54413	-107904	-829	0.31	72.944	0.934	241	
SLV 2	-53465	-107451	-830	0.313	71.986	0.934	244	
SLV 3	-50419	-103714	392	0.333	68.909	0.931	260	
SLV 4	-49470	-103261	391	0.338	67.952	0.93	264	
SLV 5	-60522	-108371	-2104	0.27	79.123	0.939	209	
SLV 6	-59466	-107867	-2105	0.273	78.054	0.938	212	
SLV 7	-47207	-94403	1966	0.321	65.669	0.928	252	
SLV 8	-46151	-93899	1965	0.326	64.605	0.928	256	
SLV 9	-61718	-104558	-1975	0.268	80.333	0.939	208	
SLV 10	-60662	-104054	-1977	0.272	79.264	0.939	210	
SLV 11	-48402	-90590	2095	0.314	66.875	0.93	245	
SLV 12	-47346	-90086	2093	0.319	65.81	0.929	249	
SLV 13	-58398	-95196	-401	0.301	76.974	0.937	234	
SLV 14	-57450	-94743	-402	0.305	76.014	0.937	236	
SLV 15	-54404	-91006	820	0.31	72.934	0.934	241	
SLV 16	-53455	-90553	819	0.314	71.976	0.934	244	

Maschio 14
Dati geometrici

X ini.	Y ini.	X fin.	Y fin.	quota i.	quota.s	l	sp.	h netta	h ini.	h fin.	a
900	1522.5	340	1522.5	L1	L2	560	85	400	500	500	

Materiale: Muratura in pietrame consolidata con iniezioni LC1
f medio 30
tau 0.9
E 24000
G 8053.69
Fattore di confidenza 1.35

Verifica a pressoflessione per azioni non sismiche 4.5.6.2 D.M. 14-01-08 (N.T.C.) gammaM 3

comb.	quota	N	M	p	es1	es2	ea	ev	e ver (cm)	Ft	Fl	Nu (daN)	
1	500	-58942	360434	1	-6.31	0	2	0,00	8,31	0,68	0,97	233028	
1	200	-92058	723058	1	-6.31	0	2	0,00	4,15	0,82	0,96	276236	
1	0	-116586	-154069	1	-6.31	0	2	0,00	8,31	0,68	0,99	239471	
2	500	-60559	378095	1	-6.31	0	2	0,00	8,31	0,68	0,97	232848	
2	200	-93980	763246	1	-6.31	0	2	0,00	4,15	0,82	0,95	275800	
2	0	-118630	-120124	1	-6.31	0	2	0,00	8,31	0,68	0,99	239878	
3	500	-64793	641601	1	-6.27	0	2	0,00	8,27	0,68	0,94	228193	
3	200	-99628	1018714	1	-6.27	0	2	0,00	4,14	0,82	0,94	272628	
3	0	-125548	-81748	1	-6.27	0	2	0,00	8,27	0,68	1,00	240641	
4	500	-64992	736872	1	-6.26	0	2	0,00	8,26	0,69	0,94	226379	
4	200	-100127	1088013	1	-6.26	0	2	0,00	4,13	0,82	0,94	271691	
4	0	-126469	-99245	1	-6.26	0	2	0,00	8,26	0,69	1,00	240586	
5	500	-65800	745703	1	-6.26	0	2	0,00	8,26	0,69	0,94	226377	
5	200	-101088	1108106	1	-6.26	0	2	0,00	4,13	0,82	0,94	271531	
5	0	-127491	-82273	1	-6.26	0	2	0,00	8,26	0,69	1,00	240765	
6	500	-63883	538056	1	-6.3	0	2	0,00	8,30	0,68	0,95	229983	
6	200	-98468	886192	1	-6.3	0	2	0,00	4,15	0,82	0,95	274438	
6	0	-124019	-152770	1	-6.3	0	2	0,00	8,30	0,68	0,99	239651	
7	500	-65499	555717	1	-6.3	0	2	0,00	8,30	0,68	0,95	229892	
7	200	-100390	926379	1	-6.3	0	2	0,00	4,15	0,82	0,95	274064	
7	0	-126063	-118825	1	-6.3	0	2	0,00	8,30	0,68	0,99	240031	
8	500	-69734	819223	1	-6.27	0	2	0,00	8,27	0,69	0,93	225742	
8	200	-106038	1181847	1	-6.27	0	2	0,00	4,13	0,82	0,94	271172	
8	0	-132981	-80449	1	-6.27	0	2	0,00	8,27	0,69	1,00	240738	
9	500	-69932	914494	1	-6.25	0	2	0,00	8,25	0,69	0,93	224062	
9	200	-106537	1251146	1	-6.25	0	2	0,00	4,13	0,82	0,93	270297	
9	0	-133902	-97946	1	-6.25	0	2	0,00	8,25	0,69	1,00	240684	
10	500	-70740	923324	1	-6.26	0	2	0,00	8,26	0,69	0,93	224087	
10	200	-107498	1271240	1	-6.26	0	2	0,00	4,13	0,82	0,93	270159	
10	0	-134924	-80974	1	-6.26	0	2	0,00	8,26	0,69	1,00	240853	
11	500	-76625	468565	1	-6.31	0	2	0,00	8,31	0,68	0,97	233028	
11	200	-119676	939976	1	-6.31	0	2	0,00	4,15	0,82	0,96	276236	
11	0	-151562	-200290	1	-6.31	0	2	0,00	8,31	0,68	0,99	239471	
12	500	-78241	486225	1	-6.31	0	2	0,00	8,31	0,68	0,97	232889	
12	200	-121598	980163	1	-6.31	0	2	0,00	4,15	0,82	0,96	275899	
12	0	-153605	-166345	1	-6.31	0	2	0,00	8,31	0,68	0,99	239786	

muratura

comb.	quota	N	M	p	es1	es2	ea	ev	e ver (cm)	Ft	Fl	Nu (daN)	
13	500	-82476	749732	1	-6.28	0	2	0,00	8,28	0,68	0,95	229231	
13	200	-127246	1235631	1	-6.28	0	2	0,00	4,14	0,82	0,95	273412	
13	0	-160524	-127969	1	-6.28	0	2	0,00	8,28	0,68	1,00	240387	
14	500	-82674	845002	1	-6.27	0	2	0,00	8,27	0,69	0,94	227803	
14	200	-127744	1304930	1	-6.27	0	2	0,00	4,13	0,82	0,94	272675	
14	0	-161445	-145466	1	-6.27	0	2	0,00	8,27	0,69	0,99	240346	
15	500	-83482	853833	1	-6.27	0	2	0,00	8,27	0,69	0,94	227788	
15	200	-128706	1325024	1	-6.27	0	2	0,00	4,13	0,82	0,94	272542	
15	0	-162467	-128494	1	-6.27	0	2	0,00	8,27	0,69	1,00	240488	
16	500	-81566	646187	1	-6.3	0	2	0,00	8,30	0,68	0,96	230644	
16	200	-126085	1103109	1	-6.3	0	2	0,00	4,15	0,82	0,95	274832	
16	0	-158995	-198991	1	-6.3	0	2	0,00	8,30	0,68	0,99	239611	
17	500	-83182	663847	1	-6.3	0	2	0,00	8,30	0,68	0,96	230559	
17	200	-128007	1143297	1	-6.3	0	2	0,00	4,15	0,82	0,95	274533	
17	0	-161039	-165046	1	-6.3	0	2	0,00	8,30	0,68	0,99	239909	
18	500	-87416	927354	1	-6.28	0	2	0,00	8,28	0,68	0,94	227218	
18	200	-133655	1398765	1	-6.28	0	2	0,00	4,14	0,82	0,94	272220	
18	0	-167957	-126670	1	-6.28	0	2	0,00	8,28	0,68	1,00	240476	
19	500	-87615	1022624	1	-6.27	0	2	0,00	8,27	0,69	0,93	225874	
19	200	-134154	1468064	1	-6.27	0	2	0,00	4,13	0,82	0,94	271522	
19	0	-168878	-144167	1	-6.27	0	2	0,00	8,27	0,69	1,00	240435	
20	500	-88423	1031455	1	-6.27	0	2	0,00	8,27	0,69	0,94	225878	
20	200	-135115	1488157	1	-6.27	0	2	0,00	4,13	0,82	0,94	271403	
20	0	-169900	-127195	1	-6.27	0	2	0,00	8,27	0,69	1,00	240570	

Verifica a taglio con rottura per fessurazione diagonale per azioni non sismiche Circ.617 C8.7.1.5 gammaM 3

comb.	quota	Vd	N	ftd	b	sigma0	Vu	c.s.	
SLU 1	250	2002	-88124	0.33	1	1.85	40620	20.29	
SLU 1	100	1984	-101602	0.33	1	2.13	43172	21.76	
SLU 2	250	2199	-90029	0.33	1	1.89	40990	18.64	
SLU 2	100	2181	-103618	0.33	1	2.18	43541	19.96	
SLU 3	250	2143	-95460	0.33	1	2.01	42028	19.61	
SLU 3	100	2115	-109988	0.33	1	2.31	44687	21.13	
SLU 4	250	1922	-95883	0.33	1	2.01	42108	21.91	
SLU 4	100	1890	-110703	0.33	1	2.33	44813	23.71	
SLU 5	250	2021	-96836	0.33	1	2.03	42287	20.93	
SLU 5	100	1988	-111711	0.33	1	2.35	44991	22.63	
SLU 6	250	2074	-94375	0.33	1	1.98	41823	20.17	
SLU 6	100	2050	-108580	0.33	1	2.28	44436	21.67	
SLU 7	250	2271	-96280	0.33	1	2.02	42183	18.58	
SLU 7	100	2247	-110595	0.33	1	2.32	44794	19.93	
SLU 8	250	2215	-101711	0.33	1	2.14	43192	19.5	
SLU 8	100	2181	-116966	0.33	1	2.46	45909	21.05	
SLU 9	250	1994	-102134	0.33	1	2.15	43270	21.7	
SLU 9	100	1956	-117681	0.33	1	2.47	46032	23.54	
SLU 10	250	2093	-103087	0.33	1	2.17	43444	20.76	
SLU 10	100	2054	-118688	0.33	1	2.49	46205	22.49	
SLU 11	250	2602	-114561	0.33	1	2.41	45491	17.48	
SLU 11	100	2579	-132083	0.33	1	2.77	48451	18.78	
SLU 12	250	2799	-116466	0.33	1	2.45	45822	16.37	
SLU 12	100	2776	-134098	0.33	1	2.82	48780	17.57	
SLU 13	250	2744	-121898	0.33	1	2.56	46753	17.04	
SLU 13	100	2710	-140469	0.33	1	2.95	49805	18.38	
SLU 14	250	2523	-122320	0.33	1	2.57	46825	18.56	
SLU 14	100	2485	-141184	0.33	1	2.97	49919	20.09	
SLU 15	250	2621	-123273	0.33	1	2.59	46986	17.93	
SLU 15	100	2583	-142192	0.33	1	2.99	50079	19.39	
SLU 16	250	2674	-120812	0.33	1	2.54	46569	17.41	
SLU 16	100	2646	-139060	0.33	1	2.92	49580	18.74	
SLU 17	250	2871	-122717	0.33	1	2.58	46892	16.33	
SLU 17	100	2842	-141076	0.33	1	2.96	49901	17.56	
SLU 18	250	2816	-128149	0.33	1	2.69	47802	16.98	
SLU 18	100	2776	-147446	0.33	1	3.1	50904	18.34	
SLU 19	250	2595	-128571	0.33	1	2.7	47872	18.45	
SLU 19	100	2551	-148161	0.33	1	3.11	51015	20	
SLU 20	250	2693	-129524	0.33	1	2.72	48030	17.83	
SLU 20	100	2650	-149169	0.33	1	3.13	51172	19.31	

Verifica a pressoflessione nel piano (7.8.2.2) e taglio con rottura per fessurazione diagonale (C8.7.1.5), gammaM = 2

comb.	quota	N	V par	V orto	M	M orto	N/(l*sp)	N/(l'*sp)	Mu	l'	fvd	Vt scorr.	Vt fess.diag.	
SLV 1	0	-128923	30333	994	9487712	-153382	2.71	2.71	25746226	560	0.88	41651	60289	
SLV 1	500	-81227	17777	6694	516288	497670	1.71	1.71	18634260	560	0.67	32112	49997	
SLV 2	0	-127565	25905	928	7924310	-149031	2.68	2.68	25582864	560	0.87	41380	60021	
SLV 2	500	-77191	13807	6463	537934	476345	1.62	1.62	17902368	560	0.66	31305	49026	
SLV 3	0	-142990	31976	-408	9413257	-53508	3	3	27302572	560	0.93	44465	63005	
SLV 3	500	-80314	18957	8858	280691	593763	1.69	1.69	18470419	560	0.67	31929	49779	
SLV 4	0	-141631	27549	-474	7849855	-49157	2.98	2.98	27163014	560	0.93	44193	62748	
SLV 4	500	-76278	14988	8627	302337	572438	1.6	1.6	17733935	560	0.65	31122	48804	
SLV 5	0	-104358	6821	1976	3495690	-189790	2.19	2.19	22437202	560	0.77	36738	55228	
SLV 5	500	-71808	567	3218	891298	322436	1.51	1.51	16894580	560	0.64	30228	47702	
SLV 6	0	-102845	1890	1903	1754628	-184945	2.16	2.16	22208834	560	0.77	36436	54901	
SLV 6	500	-67313	-3854	2960	915404	298688	1.41	1.41	16025492	560	0.62	29329	46567	
SLV 7	0	-151246	12299	-2697	3247508	143123	3.18	3.18	28101297	560	0.97	46116	64545	
SLV 7	500	-68763	4502	10433	105974	642748	1.44	1.44	16308681	560	0.62	29619	46936	
SLV 8	0	-149734	7369	-2770	1506447	147968	3.15	3.15	27961295	560	0.96	45813	64266	
SLV 8	500	-64268	82	10176	130080	618999	1.35	1.35	15422546	560	0.6	28720	45782	
SLV 9	0	-97303	-11905	1413	-1790923	-120911	2.04	2.04	21347828	560	0.74	35327	53687	
SLV 9	500	-62624	-13197	2391	978193	267291	1.32	1.32	15092028	560	0.6	28391	45353	
SLV 10	0	-95790	-16835	1339	-3531985	-116066	2.01	2.01	21106164	560	0.74	35025	53350	
SLV 10	500	-58129	-17617	2134	1002299	243542	1.22	1.22	14171517	560	0.58	27492	44158	
SLV 11	0	-144191	-6426	-3260	-2039105	212002	3.03	3.03	27424025	560	0.94	44705	63231	
SLV 11	500	-59579	-9262	9607	192869	587602	1.25	1.25	14471299	560	0.58	27783	44547	
SLV 12	0	-142678	-11356	-3334	-3780166	216847	3	3	27270726	560	0.93	44402	62946	
SLV 12	500	-55084	-13682	9349	216975	563854	1.16	1.16	13533742	560	0.56	26884	43330	
SLV 13	0	-105405	-32085	-884	-8134332	76214	2.21	2.21	22593504	560	0.78	36948	55453	
SLV 13	500	-50614	-28103	3940	805936	313852	1.06	1.06	12576372	560	0.55	25989	42084	
SLV 14	0	-104046	-36512	-949	-9697734	80565	2.19	2.19	22390341	560	0.77	36676	55161	
SLV 14	500	-46578	-32073	3709	827583	292527	0.98	0.98	11690562	560	0.53	25182	40927	

comb.	quota	N	V par	V orto	M	M orto	N/(l*sp)	N/(l'*sp)	Mu	l'	fvd	Vt scorr.	Vt fess.diag.	
SLV 15	0	-119471	-30441	-2285	-8208786	176088	2.51	2.51	24561951	560	0.84	39761	58394	
SLV 15	500	-49701	-26922	6104	570339	409945	1.04	1.04	12377702	560	0.54	25807	41825	
SLV 16	0	-118113	-34868	-2351	-9772188	180439	2.48	2.48	24382593	560	0.83	39489	58116	
SLV 16	500	-45665	-30892	5873	591985	388620	0.96	0.96	11487300	560	0.53	25000	40660	

Verifica a pressoflessione fuori piano D.M. 14-01-08 (N.T.C.)
quota 200 Ta 0 Wa 0.19 denominatore 8

comb.	fd	Sa	x	N	M	Mc	c.s.	
SLV 1	11	0.24	23.03	-121787	170566	3773761	22.12	
SLV 2	11	0.24	22.11	-116949	170566	3677335	21.56	
SLV 3	11	0.24	24.59	-130030	170566	3927847	23.03	
SLV 4	11	0.24	23.67	-125192	170566	3838962	22.51	
SLV 5	11	0.24	17.88	-94565	170566	3173593	18.61	
SLV 6	11	0.24	16.86	-89177	170566	3038198	17.81	
SLV 7	11	0.24	23.07	-122040	170566	3778678	22.15	
SLV 8	11	0.24	22.06	-116652	170566	3671273	21.52	
SLV 9	11	0.24	14.98	-79238	170566	2774039	16.26	
SLV 10	11	0.24	13.96	-73850	170566	2623030	15.38	
SLV 11	11	0.24	20.18	-106713	170566	3458746	20.28	
SLV 12	11	0.24	19.16	-101325	170566	3335727	19.56	
SLV 13	11	0.24	13.37	-70698	170566	2532151	14.85	
SLV 14	11	0.24	12.45	-65860	170566	2388991	14.01	
SLV 15	11	0.24	14.93	-78941	170566	2765859	16.22	
SLV 16	11	0.24	14.01	-74103	170566	2630239	15.42	

Verifica dei meccanismi locali di collasso con analisi cinematica lineare
accelerazione limite = 92,39; forza di aggancio al piano = 30

combinazione	N top	N base	V orto	alfa0	M*	e*	a0*	
SLV 1	-81227	-128923	6694	0.227	116.044	0.925	178	
SLV 2	-77191	-127565	6463	0.234	111.986	0.923	185	
SLV 3	-80314	-142990	8858	0.207	115.125	0.924	162	
SLV 4	-76278	-141631	8627	0.213	111.068	0.922	168	
SLV 5	-71808	-104358	3218	0.277	106.581	0.92	219	
SLV 6	-67313	-102845	2960	0.288	102.078	0.917	228	
SLV 7	-68763	-151246	10433	0.202	103.53	0.918	160	
SLV 8	-64268	-149734	10176	0.21	99.033	0.915	167	
SLV 9	-62624	-97303	2391	0.305	97.39	0.914	243	
SLV 10	-58129	-95790	2134	0.32	92.909	0.911	255	
SLV 11	-59579	-144191	9607	0.223	94.353	0.912	178	
SLV 12	-55084	-142678	9349	0.234	89.881	0.909	187	
SLV 13	-50614	-105405	3940	0.317	85.449	0.906	254	
SLV 14	-46578	-104046	3709	0.333	81.464	0.903	268	
SLV 15	-49701	-119471	6104	0.289	84.546	0.906	232	
SLV 16	-45665	-118113	5873	0.304	80.565	0.903	244	

Maschio 15
Dati geometrici

X ini.	Y ini.	X fin.	Y fin.	quota i.	quota.s	l	sp.	h netta	h ini.	h fin.	a
900	142.5	1100	142.5	L1	L2	200	85	400	500	500	

Materiale: Muratura in pietrame consolidata con iniezioni LC1
f medio 30
tau 0.9
E 24000
G 8053.69
Fattore di confidenza 1.35

Rinforzo con rete e betoncino su entrambe le facce
Betoncino: C25/30
spessore: 3
acciaio materiale: B450C
BARRE VERTICALI
diametro (mm) 5
passo 20
ancorate ad entrambe le estremità
BARRE ORIZZONTALI
diametro (mm) 5
passo 20
ancorate ad entrambe le estremità

Verifica a pressoflessione nel piano e taglio delle sezioni rinforzate 7.8.3.2 D.M. 14-01-08 (N.T.C.)

comb.	quota sezione	gamma m.	gamma s.	gamma c.	N	V	V orto	M	M orto	c.s.	d	fvd	Vt,c	Vt,M	Vt,S	
SLU 1	0	3	1.15	1.5	-43740	-6119	96	-519458	-11643	4.98	200	0.4	37778	6807	9220	
SLU 1	500	3	1.15	1.5	-17885	-1403	716	-78758	97053	12.17	200	0.3	37778	5017	9220	
SLU 2	0	3	1.15	1.5	-44251	-6178	98	-523463	-11886	4.92	200	0.4	37778	6843	9220	
SLU 2	500	3	1.15	1.5	-18227	-1436	730	-79722	98881	11.94	200	0.3	37778	5040	9220	
SLU 3	0	3	1.15	1.5	-45738	-6374	100	-534755	-12113	4.76	200	0.41	37778	6946	9220	
SLU 3	500	3	1.15	1.5	-18879	-1515	756	-79130	102097	11.53	200	0.3	37778	5085	9220	
SLU 4	0	3	1.15	1.5	-45864	-6399	99	-535590	-11967	4.75	200	0.41	37778	6955	9220	
SLU 4	500	3	1.15	1.5	-18817	-1515	753	-77911	101647	11.57	200	0.3	37778	5081	9220	
SLU 5	0	3	1.15	1.5	-46119	-6428	100	-537592	-12089	4.72	200	0.41	37778	6972	9220	
SLU 5	500	3	1.15	1.5	-18988	-1532	760	-78394	102561	11.47	200	0.3	37778	5093	9220	
SLU 6	0	3	1.15	1.5	-45661	-6335	101	-534299	-12310	4.77	200	0.41	37778	6941	9220	
SLU 6	500	3	1.15	1.5	-18993	-1502	761	-81217	102780	11.46	200	0.3	37778	5093	9220	
SLU 7	0	3	1.15	1.5	-46172	-6394	103	-538304	-12554	4.71	200	0.41	37778	6976	9220	
SLU 7	500	3	1.15	1.5	-19335	-1535	775	-82181	104608	11.26	200	0.3	37778	5117	9220	
SLU 8	0	3	1.15	1.5	-47659	-6590	106	-549596	-12780	4.57	200	0.42	37778	7079	9220	
SLU 8	500	3	1.15	1.5	-19988	-1613	801	-81589	107823	10.89	200	0.3	37778	5162	9220	
SLU 9	0	3	1.15	1.5	-47785	-6615	105	-550430	-12634	4.56	200	0.42	37778	7088	9220	
SLU 9	500	3	1.15	1.5	-19925	-1613	798	-80371	107374	10.93	200	0.3	37778	5158	9220	

muratura

comb.	quota sezione	gamma m.	gamma s.	gamma c.	N	V	V orto	M	M orto	c.s.	d	fvd	Vt,c	Vt,M	Vt,S
SLU 10	0	3	1.15	1.5	-48041	-6645	106	-552433	-12756	4.53	200	0.42	37778	7105	9220
SLU 10	500	3	1.15	1.5	-20096	-1630	805	-80853	108288	10.83	200	0.3	37778	5170	9220
SLU 11	0	3	1.15	1.5	-56862	-7955	124	-675296	-15136	3.83	200	0.45	37778	7716	9220
SLU 11	500	3	1.15	1.5	-23250	-1824	931	-102385	126169	9.36	200	0.32	37778	5388	9220
SLU 12	0	3	1.15	1.5	-57373	-8014	126	-679301	-15379	3.79	200	0.46	37778	7752	9220
SLU 12	500	3	1.15	1.5	-23592	-1857	945	-103349	127997	9.23	200	0.32	37778	5412	9220
SLU 13	0	3	1.15	1.5	-58860	-8210	129	-690593	-15606	3.7	200	0.46	37778	7855	9220
SLU 13	500	3	1.15	1.5	-24245	-1936	971	-102757	131213	8.98	200	0.32	37778	5457	9220
SLU 14	0	3	1.15	1.5	-58986	-8235	128	-691427	-15460	3.69	200	0.46	37778	7864	9220
SLU 14	500	3	1.15	1.5	-24182	-1936	968	-101539	130763	9	200	0.32	37778	5453	9220
SLU 15	0	3	1.15	1.5	-59241	-8264	129	-693430	-15581	3.67	200	0.46	37778	7881	9220
SLU 15	500	3	1.15	1.5	-24353	-1952	975	-102021	131677	8.94	200	0.32	37778	5465	9220
SLU 16	0	3	1.15	1.5	-58783	-8171	130	-690136	-15803	3.7	200	0.46	37778	7850	9220
SLU 16	500	3	1.15	1.5	-24358	-1922	976	-104844	131896	8.94	200	0.32	37778	5465	9220
SLU 17	0	3	1.15	1.5	-59294	-8230	132	-694141	-16046	3.67	200	0.46	37778	7885	9220
SLU 17	500	3	1.15	1.5	-24701	-1956	990	-105808	133724	8.81	200	0.32	37778	5489	9220
SLU 18	0	3	1.15	1.5	-60781	-8426	135	-705433	-16273	3.58	200	0.47	37778	7988	9220
SLU 18	500	3	1.15	1.5	-25353	-2034	1016	-105216	136939	8.59	200	0.33	37778	5534	9220
SLU 19	0	3	1.15	1.5	-60907	-8451	134	-706268	-16127	3.57	200	0.47	37778	7997	9220
SLU 19	500	3	1.15	1.5	-25291	-2034	1013	-103998	136490	8.61	200	0.33	37778	5530	9220
SLU 20	0	3	1.15	1.5	-61163	-8480	135	-708270	-16249	3.56	200	0.47	37778	8014	9220
SLU 20	500	3	1.15	1.5	-25462	-2051	1020	-104480	137404	8.55	200	0.33	37778	5541	9220

Verifica a pressoflessione nel piano e taglio delle sezioni rinforzate 7.8.3.2 D.M. 14-01-08 (N.T.C.)

comb.	quota sezione	gamma m.	gamma s.	gamma c.	N	V	V orto	M	M orto	c.s.	d	fvd	Vt,c	Vt,M	Vt,S
SLV 1	0	2	1.15	1.5	-53564	-14958	-294	-1574246	11617	4.51	190	0.68	53833	10949	8759
SLV 1	500	2	1.15	1.5	-18471	-11588	1348	89400	138034	14.51	200	0.45	56667	7586	9220
SLV 2	0	2	1.15	1.5	-54800	-16554	-291	-1773269	11272	4.23	180	0.71	51000	10794	8298
SLV 2	500	2	1.15	1.5	-18946	-13840	1388	92313	141380	14.15	200	0.45	56667	7635	9220
SLV 3	0	2	1.15	1.5	-49744	-14211	495	-1509651	-68276	4.79	190	0.65	53833	10552	8759
SLV 3	500	2	1.15	1.5	-21006	-11243	414	1589	81323	12.76	200	0.46	56667	7849	9220
SLV 4	0	2	1.15	1.5	-50980	-15807	499	-1708674	-68621	4.48	180	0.68	51000	10397	8298
SLV 4	500	2	1.15	1.5	-21481	-13495	454	4502	84669	12.48	200	0.46	56667	7899	9220
SLV 5	0	2	1.15	1.5	-53172	-9395	-1217	-862081	116290	5.04	200	0.66	56667	11191	9220
SLV 5	500	2	1.15	1.5	-14670	-4126	2332	102655	197314	18.27	200	0.42	56667	7191	9220
SLV 6	0	2	1.15	1.5	-54549	-11172	-1213	-1083721	115906	4.91	0	0	0	0	0
SLV 6	500	2	1.15	1.5	-15199	-6634	2377	105899	201040	17.64	200	0.43	56667	7246	9220
SLV 7	0	2	1.15	1.5	-40438	-6904	1415	-646765	-150021	6.63	200	0.58	56667	9868	9220
SLV 7	500	2	1.15	1.5	-23121	-2978	-782	-190047	8276	11.59	200	0.47	56667	8069	9220
SLV 8	0	2	1.15	1.5	-41815	-8682	1418	-868404	-150405	6.41	0	0	0	0	0
SLV 8	500	2	1.15	1.5	-23650	-5486	-737	-186803	12003	11.33	200	0.48	56667	8124	9220
SLV 9	0	2	1.15	1.5	-49076	-3957	-1218	-196752	126100	5.46	200	0.63	56667	10766	9220
SLV 9	500	2	1.15	1.5	-13970	2504	2244	26347	191577	19.19	200	0.42	56667	7118	9220
SLV 10	0	2	1.15	1.5	-50453	-5734	-1214	-418392	125716	5.31	200	0.64	56667	10909	9220
SLV 10	500	2	1.15	1.5	-14499	-4	2289	29591	195303	18.49	200	0.42	56667	7173	9220
SLV 11	0	2	1.15	1.5	-36342	-1466	1414	18565	-140211	7.38	200	0.56	56667	9443	9220
SLV 11	500	2	1.15	1.5	-22421	3652	-871	-266354	2539	11.96	200	0.47	56667	7996	9220
SLV 12	0	2	1.15	1.5	-37719	-3244	1417	-203075	-140595	7.11	200	0.56	56667	9586	9220
SLV 12	500	2	1.15	1.5	-22950	1144	-826	-263110	6266	11.68	200	0.47	56667	8051	9220
SLV 13	0	2	1.15	1.5	-39911	3169	-298	643518	44316	6.4	0	0	0	0	0
SLV 13	500	2	1.15	1.5	-16139	10513	1053	-164958	118911	16.61	200	0.43	56667	7344	9220
SLV 14	0	2	1.15	1.5	-41147	1573	-295	444495	43971	6.51	200	0.58	56667	9942	9220
SLV 14	500	2	1.15	1.5	-16614	8261	1093	-162045	122257	16.14	200	0.43	56667	7393	9220
SLV 15	0	2	1.15	1.5	-36091	3916	491	708113	-35577	6.76	190	0.57	53833	9133	8759
SLV 15	500	2	1.15	1.5	-18674	10858	118	-252768	62199	14.35	200	0.45	56667	7607	9220
SLV 16	0	2	1.15	1.5	-37327	2320	494	509090	-35922	7.06	200	0.56	56667	9545	9220
SLV 16	500	2	1.15	1.5	-19149	8606	159	-249855	65546	14	200	0.45	56667	7656	9220

Verifica a pressoflessione fuori piano muratura rinforzata D.M. 14-01-08 (N.T.C.)
quota 200 Ta 0 Wa 0.19 denominatore 8

comb.	fd	fcd	fyd	N	Sa	M	x	c.s.
SLV 1	11	141	3913	-40220	0.24	60916	200	6.98
SLV 2	11	141	3913	-39583	0.24	60916	200	7.09
SLV 3	11	141	3913	-36324	0.24	60916	200	7.73
SLV 4	11	141	3913	-35687	0.24	60916	200	7.87
SLV 5	11	141	3913	-47277	0.24	60916	200	5.94
SLV 6	11	141	3913	-46568	0.24	60916	200	6.03
SLV 7	11	141	3913	-34292	0.24	60916	200	8.19
SLV 8	11	141	3913	-33583	0.24	60916	200	8.36
SLV 9	11	141	3913	-49400	0.24	60916	200	5.68
SLV 10	11	141	3913	-48690	0.24	60916	200	5.77
SLV 11	11	141	3913	-36415	0.24	60916	200	7.71
SLV 12	11	141	3913	-35706	0.24	60916	200	7.86
SLV 13	11	141	3913	-47295	0.24	60916	200	5.94
SLV 14	11	141	3913	-46659	0.24	60916	200	6.02
SLV 15	11	141	3913	-43400	0.24	60916	200	6.47
SLV 16	11	141	3913	-42763	0.24	60916	200	6.57

Per la verifica seguente non si considerano i rinforzi predisposti.

Verifica dei meccanismi locali di collasso con analisi cinematica lineare
accelerazione limite = 92,39; forza di aggancio al piano = 30

combinazione	N top	N base	V orto	alfa0	M*	e*	a0*
SLV 1	-18471	-53564	1348	0.316	30.908	0.907	253
SLV 2	-18946	-54800	1388	0.311	31.378	0.908	249
SLV 3	-21006	-49744	414	0.33	33.427	0.912	263
SLV 4	-21481	-50980	454	0.325	33.9	0.913	259
SLV 5	-14670	-53172	2332	0.308	27.166	0.899	249
SLV 6	-15199	-54549	2377	0.301	27.683	0.9	243
SLV 7	-23121	-40438	-782	0.303	35.537	0.915	240
SLV 8	-23650	-41815	-737	0.301	36.066	0.916	239
SLV 9	-13970	-49076	2244	0.318	26.483	0.898	258
SLV 10	-14499	-50453	2289	0.311	26.999	0.899	252
SLV 11	-22421	-36342	-871	0.304	34.838	0.914	242
SLV 12	-22950	-37719	-826	0.302	35.366	0.915	240
SLV 13	-16139	-39911	1053	0.349	28.606	0.902	281

combinazione	N top	N base	V orto	alfa0	M*	e*	a0*	
SLV 14	-16614	-41147	1093	0.343	29.074	0.903	276	
SLV 15	-18674	-36091	118	0.362	31.11	0.907	290	
SLV 16	-19149	-37327	159	0.355	31.58	0.908	284	

Maschio 16
Dati geometrici

X ini.	Y ini.	X fin.	Y fin.	quota i.	quota.s	l	sp.	h netta	h ini.	h fin.	a
1220	142.5	1650	142.5	L1	L2	430	85	400	500	500	

Materiale: Muratura in pietrame consolidata con iniezioni LC1
f medio 30
tau 0.9
E 24000
G 8053.69
Fattore di confidenza 1.35

Verifica a pressoflessione per azioni non sismiche 4.5.6.2 D.M. 14-01-08 (N.T.C.) gammaM 3

comb.	quota	N	M	p	es1	es2	ea	ev	e ver (cm)	Ft	Fl	Nu (daN)	
1	500	-46693	-1020944	1	-7.41	0	2	0,00	9,41	0,66	0,84	150198	
1	200	-75295	-90679	1	-7.41	0	2	0,00	4,71	0,80	0,99	214443	
1	0	-90848	629987	1	-7.41	0	2	0,00	9,41	0,66	0,95	169538	
2	500	-47184	-1026605	1	-7.4	0	2	0,00	9,40	0,66	0,84	150381	
2	200	-76276	-107123	1	-7.4	0	2	0,00	4,70	0,80	0,99	214170	
2	0	-92150	616763	1	-7.4	0	2	0,00	9,40	0,66	0,95	169900	
3	500	-48107	-1022644	1	-7.34	0	2	0,00	9,34	0,66	0,85	151360	
3	200	-79208	-178525	1	-7.34	0	2	0,00	4,67	0,80	0,98	213152	
3	0	-96394	537244	1	-7.34	0	2	0,00	9,34	0,66	0,96	171727	
4	500	-48011	-1015285	1	-7.32	0	2	0,00	9,32	0,66	0,85	151605	
4	200	-79484	-192682	1	-7.32	0	2	0,00	4,66	0,80	0,98	212980	
4	0	-96910	516388	1	-7.32	0	2	0,00	9,32	0,66	0,96	172160	
5	500	-48256	-1018116	1	-7.32	0	2	0,00	9,32	0,66	0,85	151688	
5	200	-79974	-200904	1	-7.32	0	2	0,00	4,66	0,80	0,98	212859	
5	0	-97561	509776	1	-7.32	0	2	0,00	9,32	0,66	0,96	172315	
6	500	-48239	-1048070	1	-7.35	0	2	0,00	9,35	0,66	0,84	150680	
6	200	-78777	-192921	1	-7.35	0	2	0,00	4,68	0,80	0,98	212778	
6	0	-95553	533688	1	-7.35	0	2	0,00	9,35	0,66	0,96	171631	
7	500	-48730	-1053731	1	-7.34	0	2	0,00	9,34	0,66	0,84	150853	
7	200	-79758	-209365	1	-7.34	0	2	0,00	4,67	0,80	0,98	212537	
7	0	-96856	520464	1	-7.34	0	2	0,00	9,34	0,66	0,96	171949	
8	500	-49653	-1049770	1	-7.28	0	2	0,00	9,28	0,66	0,85	151794	
8	200	-82690	-280767	1	-7.28	0	2	0,00	4,64	0,80	0,98	211623	
8	0	-101099	440945	1	-7.28	0	2	0,00	9,28	0,66	0,97	173625	
9	500	-49557	-1042411	1	-7.26	0	2	0,00	9,26	0,66	0,85	152033	
9	200	-82966	-294924	1	-7.26	0	2	0,00	4,63	0,80	0,97	211465	
9	0	-101616	420089	1	-7.26	0	2	0,00	9,26	0,66	0,97	174034	
10	500	-49802	-1045242	1	-7.26	0	2	0,00	9,26	0,66	0,85	152111	
10	200	-83457	-303146	1	-7.26	0	2	0,00	4,63	0,80	0,97	211359	
10	0	-102267	413477	1	-7.26	0	2	0,00	9,26	0,66	0,97	174172	
11	500	-60700	-1327227	1	-7.41	0	2	0,00	9,41	0,66	0,84	150198	
11	200	-97884	-117882	1	-7.41	0	2	0,00	4,71	0,80	0,99	214443	
11	0	-118102	818983	1	-7.41	0	2	0,00	9,41	0,66	0,95	169538	
12	500	-61192	-1332888	1	-7.4	0	2	0,00	9,40	0,66	0,84	150339	
12	200	-98865	-134326	1	-7.4	0	2	0,00	4,70	0,80	0,99	214233	
12	0	-119405	805759	1	-7.4	0	2	0,00	9,40	0,66	0,95	169817	
13	500	-62114	-1328927	1	-7.35	0	2	0,00	9,35	0,66	0,84	151098	
13	200	-101797	-205729	1	-7.35	0	2	0,00	4,68	0,80	0,99	213437	
13	0	-123648	726240	1	-7.35	0	2	0,00	9,35	0,66	0,96	171242	
14	500	-62018	-1321569	1	-7.34	0	2	0,00	9,34	0,66	0,85	151287	
14	200	-102072	-219886	1	-7.34	0	2	0,00	4,67	0,80	0,98	213302	
14	0	-124164	705384	1	-7.34	0	2	0,00	9,34	0,66	0,96	171580	
15	500	-62264	-1324399	1	-7.34	0	2	0,00	9,34	0,66	0,85	151352	
15	200	-102563	-228108	1	-7.34	0	2	0,00	4,67	0,80	0,98	213207	
15	0	-124816	698772	1	-7.34	0	2	0,00	9,34	0,66	0,96	171704	
16	500	-62246	-1354353	1	-7.37	0	2	0,00	9,37	0,66	0,84	150572	
16	200	-101366	-220124	1	-7.37	0	2	0,00	4,68	0,80	0,98	213149	
16	0	-122808	722684	1	-7.37	0	2	0,00	9,37	0,66	0,96	171165	
17	500	-62738	-1360014	1	-7.36	0	2	0,00	9,36	0,66	0,84	150706	
17	200	-102347	-236568	1	-7.36	0	2	0,00	4,68	0,80	0,98	212958	
17	0	-124110	709460	1	-7.36	0	2	0,00	9,36	0,66	0,96	171418	
18	500	-63660	-1356053	1	-7.31	0	2	0,00	9,31	0,66	0,85	151442	
18	200	-105279	-307971	1	-7.31	0	2	0,00	4,66	0,80	0,98	212227	
18	0	-128354	629941	1	-7.31	0	2	0,00	9,31	0,66	0,96	172749	
19	500	-63564	-1348695	1	-7.3	0	2	0,00	9,30	0,66	0,85	151628	
19	200	-105554	-322128	1	-7.3	0	2	0,00	4,65	0,80	0,98	212100	
19	0	-128870	609085	1	-7.3	0	2	0,00	9,30	0,66	0,97	173073	
20	500	-63810	-1351525	1	-7.29	0	2	0,00	9,29	0,66	0,85	151690	
20	200	-106045	-330350	1	-7.29	0	2	0,00	4,65	0,80	0,98	212013	
20	0	-129521	602473	1	-7.29	0	2	0,00	9,29	0,66	0,97	173186	

Verifica a taglio con rottura per fessurazione diagonale per azioni non sismiche Circ.617 C8.7.1.5 gammaM 3

comb.	quota	Vd	N	ftd	b	sigma0	Vu	c.s.	
SLU 1	250	-644	-72483	0.33	1	1.98	32117	49.84	
SLU 1	100	-608	-86429	0.33	1	2.36	34662	57.01	
SLU 2	250	-477	-73395	0.33	1	2.01	32290	67.63	
SLU 2	100	-441	-87652	0.33	1	2.4	34876	79.11	
SLU 3	250	51	-76017	0.33	1	2.08	32781	100	
SLU 3	100	87	-91553	0.33	1	2.5	35551	100	
SLU 4	250	110	-76229	0.33	1	2.09	32820	100	
SLU 4	100	147	-92003	0.33	1	2.52	35628	100	
SLU 5	250	194	-76684	0.33	1	2.1	32904	100	
SLU 5	100	230	-92614	0.33	1	2.53	35732	100	
SLU 6	250	-147	-75685	0.33	1	2.07	32719	100	
SLU 6	100	-111	-90823	0.33	1	2.48	35425	100	
SLU 7	250	20	-76597	0.33	1	2.1	32888	100	
SLU 7	100	56	-92046	0.33	1	2.52	35635	100	

muratura

comb.	quota	Vd	N	ftd	b	sigma0	Vu	c.s.	
SLU 8	250	548	-79219	0.33	1	2.17	33370	60.87	
SLU 8	100	585	-95947	0.33	1	2.63	36296	62.07	
SLU 9	250	608	-79431	0.33	1	2.17	33409	54.99	
SLU 9	100	644	-96397	0.33	1	2.64	36371	56.47	
SLU 10	250	691	-79887	0.33	1	2.19	33492	48.46	
SLU 10	100	728	-97008	0.33	1	2.65	36474	50.13	
SLU 11	250	-838	-94228	0.33	1	2.58	36006	42.98	
SLU 11	100	-790	-112358	0.33	1	3.07	38953	49.29	
SLU 12	250	-671	-95140	0.33	1	2.6	36160	53.91	
SLU 12	100	-623	-113580	0.33	1	3.11	39144	62.81	
SLU 13	250	-142	-97762	0.33	1	2.67	36599	100	
SLU 13	100	-95	-117482	0.33	1	3.21	39746	100	
SLU 14	250	-83	-97973	0.33	1	2.68	36634	100	
SLU 14	100	-36	-117931	0.33	1	3.23	39815	100	
SLU 15	250	0	-98429	0.33	1	2.69	36710	100	
SLU 15	100	48	-118543	0.33	1	3.24	39908	100	
SLU 16	250	-340	-97430	0.33	1	2.67	36544	100	
SLU 16	100	-293	-116752	0.33	1	3.19	39634	100	
SLU 17	250	-173	-98342	0.33	1	2.69	36696	100	
SLU 17	100	-126	-117974	0.33	1	3.23	39822	100	
SLU 18	250	355	-100964	0.33	1	2.76	37128	100	
SLU 18	100	402	-121876	0.33	1	3.33	40414	100	
SLU 19	250	414	-101176	0.33	1	2.77	37163	89.71	
SLU 19	100	462	-122325	0.33	1	3.35	40482	87.69	
SLU 20	250	498	-101631	0.33	1	2.78	37238	74.81	
SLU 20	100	545	-122937	0.33	1	3.36	40574	74.42	

Verifica a pressoflessione nel piano (7.8.2.2) e taglio con rottura per fessurazione diagonale (C8.7.1.5), gammaM = 2

comb.	quota	N	V par	V orto	M	M orto	N/(l*sp)	N/(l'*sp)	Mu	l'	fvd	Vt scorr.	Vt fess.diag.	
SLV 1	0	-83728	-7104	-1487	-2656693	23293	2.29	2.29	13635146	430	0.79	28929	43175	
SLV 1	500	-40818	-14484	3994	-735840	251106	1.12	1.12	7738085	430	0.56	20347	32862	
SLV 2	0	-81741	-9118	-1548	-3405508	26882	2.24	2.24	13412822	430	0.78	28532	42753	
SLV 2	500	-37966	-15927	3761	-663622	235589	1.04	1.04	7264891	430	0.54	19776	32059	
SLV 3	0	-72035	-9662	-356	-2317175	-50287	1.97	1.97	12255624	430	0.73	26590	40625	
SLV 3	500	-40210	-16176	1580	-711398	161413	1.1	1.1	7638079	430	0.55	20225	32693	
SLV 4	0	-70049	-11676	-417	-3065990	-46698	1.92	1.92	12004372	430	0.72	26193	40176	
SLV 4	500	-37358	-17619	1346	-639179	145896	1.02	1.02	7162726	430	0.54	19655	31886	
SLV 5	0	-110298	7474	-2691	-627165	135335	3.02	3.02	16136832	430	0.94	34243	48473	
SLV 5	500	-47918	-4383	8001	-1013731	407714	1.31	1.31	8872265	430	0.6	21767	34780	
SLV 6	0	-108086	5230	-2760	-1461073	139332	2.96	2.96	15962139	430	0.92	33801	48055	
SLV 6	500	-44742	-5990	7741	-933306	390433	1.22	1.22	8372749	430	0.58	21132	33936	
SLV 7	0	-71323	-1052	1079	504562	-109933	1.95	1.95	12166127	430	0.72	26448	40465	
SLV 7	500	-45892	-10024	-47	-932255	108738	1.26	1.26	8555043	430	0.58	21362	34244	
SLV 8	0	-69112	-3295	1010	-329346	-105936	1.89	1.89	11884052	430	0.71	26006	39962	
SLV 8	500	-42716	-11631	-307	-851829	91457	1.17	1.17	8047511	430	0.57	20727	33386	
SLV 9	0	-121283	17313	-2595	1415481	157965	3.32	3.32	16914189	430	1	36440	50502	
SLV 9	500	-53258	2512	9009	-1223963	451500	1.46	1.46	9683778	430	0.62	22835	36156	
SLV 10	0	-119071	15070	-2664	581573	161962	3.26	3.26	16769762	430	0.98	35998	50100	
SLV 10	500	-50082	906	8749	-1143538	434220	1.37	1.37	9205384	430	0.61	22200	35344	
SLV 11	0	-82309	8788	1175	2547208	-87303	2.25	2.25	13476820	430	0.78	28645	42874	
SLV 11	500	-51231	-3129	961	-1142487	152524	1.4	1.4	9380031	430	0.61	22430	35640	
SLV 12	0	-80097	6545	1106	1713300	-83306	2.19	2.19	13225012	430	0.77	28203	42400	
SLV 12	500	-48056	-4736	701	-1062062	135244	1.31	1.31	8893622	430	0.6	21794	34817	
SLV 13	0	-120346	25694	-1168	4152125	98727	3.29	3.29	16853708	430	0.99	36252	50332	
SLV 13	500	-58616	8501	7356	-1436614	397061	1.6	1.6	10462439	430	0.65	23906	37486	
SLV 14	0	-118359	23680	-1229	3403309	102316	3.24	3.24	16721979	430	0.98	35855	49970	
SLV 14	500	-55764	7058	7122	-1364395	381544	1.53	1.53	10052472	430	0.64	23336	36784	
SLV 15	0	-108653	23137	-37	4491643	25147	2.97	2.97	16007522	430	0.93	33914	48162	
SLV 15	500	-58008	6808	4941	-1412171	307368	1.59	1.59	10375909	430	0.65	23785	37337	
SLV 16	0	-106667	21122	-98	3742828	28736	2.92	2.92	15846865	430	0.92	33517	47784	
SLV 16	500	-55156	5365	4708	-1339952	291851	1.51	1.51	9963782	430	0.64	23215	36633	

Verifica a pressoflessione fuori piano D.M. 14-01-08 (N.T.C.)
quota 200 Ta 0 Wa 0.19 denominatore 8

comb.	fd	Sa	x	N	M	Mc	c.s.	
SLV 1	11	0.24	17.15	-69650	130970	2362848	18.04	
SLV 2	11	0.24	16.37	-66470	130970	2281014	17.42	
SLV 3	11	0.24	15.36	-62394	130970	2172437	16.59	
SLV 4	11	0.24	14.58	-59215	130970	2084922	15.92	
SLV 5	11	0.24	21.7	-88111	130970	2788871	21.29	
SLV 6	11	0.24	20.82	-84570	130970	2713673	20.72	
SLV 7	11	0.24	15.74	-63925	130970	2213696	16.9	
SLV 8	11	0.24	14.87	-60385	130970	2117414	16.17	
SLV 9	11	0.24	23.77	-96524	130970	2955184	22.56	
SLV 10	11	0.24	22.9	-92984	130970	2887321	22.05	
SLV 11	11	0.24	17.81	-72338	130970	2430114	18.55	
SLV 12	11	0.24	16.94	-68798	130970	2341167	17.88	
SLV 13	11	0.24	24.06	-97694	130970	2976929	22.73	
SLV 14	11	0.24	23.27	-94515	130970	2917048	22.27	
SLV 15	11	0.24	22.27	-90438	130970	2836622	21.66	
SLV 16	11	0.24	21.49	-87259	130970	2771061	21.16	

Verifica dei meccanismi locali di collasso con analisi cinematica lineare
accelerazione limite = 92,39; forza di aggancio al piano = 30

combinazione	N top	N base	V orto	alfa0	M*	e*	a0*	
SLV 1	-40818	-83728	3994	0.293	67.547	0.908	234	
SLV 2	-37966	-81741	3761	0.307	64.724	0.905	246	
SLV 3	-40210	-72035	1580	0.338	66.945	0.907	270	
SLV 4	-37358	-70049	1346	0.354	64.124	0.905	285	
SLV 5	-47918	-110298	8001	0.21	74.614	0.914	167	
SLV 6	-44742	-108086	7741	0.219	71.448	0.911	175	
SLV 7	-45892	-71323	-47	0.341	72.593	0.912	272	
SLV 8	-42716	-69112	-307	0.349	69.432	0.91	279	
SLV 9	-53258	-121283	9009	0.187	79.954	0.918	148	
SLV 10	-50082	-119071	8749	0.195	76.776	0.916	155	
SLV 11	-51231	-82309	961	0.309	77.926	0.917	245	
SLV 12	-48056	-80097	701	0.323	74.752	0.914	257	

combinazione	N top	N base	V orto	alfa0	M*	e*	a0*	
SLV 13	-58616	-120346	7356	0.203	85.33	0.922	160	
SLV 14	-55764	-118359	7122	0.21	82.467	0.92	166	
SLV 15	-58008	-108653	4941	0.237	84.72	0.922	187	
SLV 16	-55156	-106667	4708	0.245	81.858	0.92	194	

Maschio 17

Dati geometrici

X ini.	Y ini.	X fin.	Y fin.	quota i.	quota.s	l	sp.	h netta	h ini.	h fin.	a
1650	610	1020	610	L1	L2	630	45	400	500	500	

Materiale: Muratura in pietrame consolidata con iniezioni LC1
f medio 30
tau 0.9
E 24000
G 8053.69
Fattore di confidenza 1.35

Verifica a pressoflessione per azioni non sismiche 4.5.6.2 D.M. 14-01-08 (N.T.C.) gammaM 3

comb.	quota	N	M	p	es1	es2	ea	ev	e ver (cm)	Ft	Fl	Nu (daN)	
1	500	-60231	-679132	1	0	0	2	0,00	2,00	0,75	0,94	148690	
1	200	-81181	-374800	1	0	0	2	0,00	2,00	0,75	0,98	153884	
1	0	-97928	-692968	1	0	0	2	0,00	2,00	0,75	0,96	151965	
2	500	-62370	-636548	1	0	0	2	0,00	2,00	0,75	0,95	149525	
2	200	-83233	-354614	1	0	0	2	0,00	2,00	0,75	0,98	154162	
2	0	-99933	-692813	1	0	0	2	0,00	2,00	0,75	0,97	152077	
3	500	-67118	-604732	1	0	0	2	0,00	2,00	0,75	0,96	150457	
3	200	-88762	-315954	1	0	0	2	0,00	2,00	0,75	0,98	154708	
3	0	-105691	-691113	1	0	0	2	0,00	2,00	0,75	0,97	152385	
4	500	-67014	-633680	1	0	0	2	0,00	2,00	0,75	0,95	150110	
4	200	-89079	-319571	1	0	0	2	0,00	2,00	0,75	0,98	154686	
4	0	-106154	-690540	1	0	0	2	0,00	2,00	0,75	0,97	152411	
5	500	-68084	-612388	1	0	0	2	0,00	2,00	0,75	0,96	150469	
5	200	-90105	-309478	1	0	0	2	0,00	2,00	0,75	0,98	154806	
5	0	-107156	-690462	1	0	0	2	0,00	2,00	0,75	0,97	152459	
6	500	-65622	-688862	1	0	0	2	0,00	2,00	0,75	0,95	149297	
6	200	-87232	-349151	1	0	0	2	0,00	2,00	0,75	0,98	154363	
6	0	-104161	-637584	1	0	0	2	0,00	2,00	0,75	0,97	152710	
7	500	-67761	-646279	1	0	0	2	0,00	2,00	0,75	0,95	150046	
7	200	-89285	-328965	1	0	0	2	0,00	2,00	0,75	0,98	154611	
7	0	-106165	-637429	1	0	0	2	0,00	2,00	0,75	0,97	152802	
8	500	-72509	-614463	1	0	0	2	0,00	2,00	0,75	0,96	150875	
8	200	-94814	-290305	1	0	0	2	0,00	2,00	0,75	0,98	155096	
8	0	-111923	-635729	1	0	0	2	0,00	2,00	0,75	0,97	153054	
9	500	-72404	-643411	1	0	0	2	0,00	2,00	0,75	0,96	150554	
9	200	-95131	-293922	1	0	0	2	0,00	2,00	0,75	0,98	155075	
9	0	-112386	-635156	1	0	0	2	0,00	2,00	0,75	0,97	153077	
10	500	-73474	-622119	1	0	0	2	0,00	2,00	0,75	0,96	150881	
10	200	-96157	-283829	1	0	0	2	0,00	2,00	0,75	0,99	155182	
10	0	-113389	-635078	1	0	0	2	0,00	2,00	0,75	0,97	153116	
11	500	-78301	-882871	1	0	0	2	0,00	2,00	0,75	0,94	148690	
11	200	-105535	-487240	1	0	0	2	0,00	2,00	0,75	0,98	153884	
11	0	-127306	-900858	1	0	0	2	0,00	2,00	0,75	0,96	151965	
12	500	-80440	-840288	1	0	0	2	0,00	2,00	0,75	0,95	149337	
12	200	-107587	-467054	1	0	0	2	0,00	2,00	0,75	0,98	154099	
12	0	-129311	-900703	1	0	0	2	0,00	2,00	0,75	0,97	152052	
13	500	-85188	-808472	1	0	0	2	0,00	2,00	0,75	0,95	150083	
13	200	-113116	-428394	1	0	0	2	0,00	2,00	0,75	0,98	154531	
13	0	-135069	-899004	1	0	0	2	0,00	2,00	0,75	0,97	152293	
14	500	-85083	-837420	1	0	0	2	0,00	2,00	0,75	0,95	149808	
14	200	-113433	-432011	1	0	0	2	0,00	2,00	0,75	0,98	154514	
14	0	-135532	-898430	1	0	0	2	0,00	2,00	0,75	0,97	152314	
15	500	-86153	-816128	1	0	0	2	0,00	2,00	0,75	0,95	150096	
15	200	-114459	-421918	1	0	0	2	0,00	2,00	0,75	0,98	154610	
15	0	-136534	-898353	1	0	0	2	0,00	2,00	0,75	0,97	152353	
16	500	-83691	-892602	1	0	0	2	0,00	2,00	0,75	0,95	149166	
16	200	-111587	-461591	1	0	0	2	0,00	2,00	0,75	0,98	154258	
16	0	-133539	-845474	1	0	0	2	0,00	2,00	0,75	0,97	152547	
17	500	-85830	-850019	1	0	0	2	0,00	2,00	0,75	0,95	149760	
17	200	-113639	-441405	1	0	0	2	0,00	2,00	0,75	0,98	154455	
17	0	-135544	-845319	1	0	0	2	0,00	2,00	0,75	0,97	152620	
18	500	-90578	-818202	1	0	0	2	0,00	2,00	0,75	0,96	150439	
18	200	-119168	-402745	1	0	0	2	0,00	2,00	0,75	0,98	154849	
18	0	-141302	-843620	1	0	0	2	0,00	2,00	0,75	0,97	152828	
19	500	-90474	-847150	1	0	0	2	0,00	2,00	0,75	0,95	150182	
19	200	-119485	-406362	1	0	0	2	0,00	2,00	0,75	0,98	154832	
19	0	-141765	-843046	1	0	0	2	0,00	2,00	0,75	0,97	152846	
20	500	-91543	-825859	1	0	0	2	0,00	2,00	0,75	0,96	150448	
20	200	-120511	-396269	1	0	0	2	0,00	2,00	0,75	0,98	154920	
20	0	-142767	-842969	1	0	0	2	0,00	2,00	0,75	0,97	152879	

Verifica a taglio con rottura per fessurazione diagonale per azioni non sismiche Circ.617 C8.7.1.5 gammaM 3

comb.	quota	Vd	N	ftd	b	sigma0	Vu	c.s.	
SLU 1	250	-1505	-77073	0.33	1	2.72	28594	19	
SLU 1	0	-1541	-97928	0.33	1	3.45	31855	20.67	
SLU 2	250	-1578	-79147	0.33	1	2.79	28935	18.34	
SLU 2	0	-1614	-99933	0.33	1	3.52	32151	19.92	
SLU 3	250	-1758	-84629	0.33	1	2.99	29817	16.96	
SLU 3	0	-1793	-105691	0.33	1	3.73	32986	18.39	
SLU 4	250	-1762	-84905	0.33	1	2.99	29861	16.95	
SLU 4	0	-1797	-106154	0.33	1	3.74	33052	18.39	
SLU 5	250	-1799	-85942	0.33	1	3.03	30024	16.69	
SLU 5	0	-1834	-107156	0.33	1	3.78	33195	18.1	
SLU 6	250	-1412	-83096	0.33	1	2.93	29573	20.95	
SLU 6	0	-1452	-104161	0.33	1	3.67	32766	22.57	
SLU 7	250	-1484	-85170	0.33	1	3	29903	20.14	

muratura

comb.	quota	Vd	N	ftd	b	sigma0	Vu	c.s.	
SLU 7	0	-1525	-106165	0.33	1	3.74	33054	21.68	
SLU 8	250	-1664	-90653	0.33	1	3.2	30757	18.48	
SLU 8	0	-1704	-111923	0.33	1	3.95	33867	19.88	
SLU 9	250	-1668	-90928	0.33	1	3.21	30799	18.46	
SLU 9	0	-1708	-112386	0.33	1	3.96	33932	19.87	
SLU 10	250	-1705	-91965	0.33	1	3.24	30958	18.16	
SLU 10	0	-1744	-113389	0.33	1	4	34071	19.53	
SLU 11	250	-1957	-100195	0.33	1	3.53	32189	16.45	
SLU 11	0	-2004	-127306	0.33	1	4.49	35949	17.94	
SLU 12	250	-2030	-102268	0.33	1	3.61	32492	16.01	
SLU 12	0	-2077	-129311	0.33	1	4.56	36212	17.44	
SLU 13	250	-2209	-107751	0.33	1	3.8	33280	15.06	
SLU 13	0	-2256	-135069	0.33	1	4.76	36955	16.38	
SLU 14	250	-2214	-108027	0.33	1	3.81	33319	15.05	
SLU 14	0	-2260	-135532	0.33	1	4.78	37015	16.38	
SLU 15	250	-2250	-109064	0.33	1	3.85	33466	14.87	
SLU 15	0	-2296	-136534	0.33	1	4.82	37142	16.18	
SLU 16	250	-1863	-106218	0.33	1	3.75	33062	17.75	
SLU 16	0	-1914	-133539	0.33	1	4.71	36759	19.2	
SLU 17	250	-1936	-108292	0.33	1	3.82	33357	17.23	
SLU 17	0	-1987	-135544	0.33	1	4.78	37016	18.63	
SLU 18	250	-2116	-113774	0.33	1	4.01	34124	16.13	
SLU 18	0	-2166	-141302	0.33	1	4.98	37744	17.42	
SLU 19	250	-2120	-114050	0.33	1	4.02	34163	16.11	
SLU 19	0	-2170	-141765	0.33	1	5	37802	17.42	
SLU 20	250	-2157	-115087	0.33	1	4.06	34306	15.91	
SLU 20	0	-2207	-142767	0.33	1	5.04	37927	17.19	

Verifica a pressoflessione nel piano (7.8.2.2) e taglio con rottura per fessurazione diagonale (C8.7.1.5), gammaM = 2

comb.	quota	N	V par	V orto	M	M orto	N/(l*sp)	N/(l'*sp)	Mu	l'	fvd	Vt scorr.	Vt fess.diag.	
SLV 1	0	-99654	24345	678	5766919	-59405	3.52	3.52	19707562	630	1.04	29381	40169	
SLV 1	500	-70445	20368	-667	-922699	-14798	2.48	2.48	16351926	630	0.83	23539	34634	
SLV 2	0	-99925	25868	683	6083773	-59667	3.52	3.52	19729318	630	1.04	29435	40217	
SLV 2	500	-71652	21359	-665	-1073089	-14734	2.53	2.53	16530348	630	0.84	23780	34880	
SLV 3	0	-95559	24100	-306	5719742	27588	3.37	3.37	19358118	630	1.01	28562	39440	
SLV 3	500	-66686	19899	753	-798212	44929	2.35	2.35	15774274	630	0.8	22787	33856	
SLV 4	0	-95830	25622	-301	6036596	27326	3.38	3.38	19382488	630	1.01	28616	39488	
SLV 4	500	-67893	20890	756	-948601	44993	2.39	2.39	15963371	630	0.81	23029	34107	
SLV 5	0	-108606	5984	1694	1213834	-149559	3.83	3.83	20334113	630	1.1	31171	41718	
SLV 5	500	-71971	9266	-2367	-878005	-95506	2.54	2.54	16576906	630	0.84	23844	34944	
SLV 6	0	-108908	7679	1700	1566694	-149851	3.84	3.84	20351967	630	1.1	31232	41770	
SLV 6	500	-73315	10370	-2365	-1045484	-95435	2.59	2.59	16770561	630	0.85	24113	35216	
SLV 7	0	-94957	5165	-1586	1056577	140419	3.35	3.35	19303386	630	1	28441	39331	
SLV 7	500	-59441	7702	2368	-463046	103584	2.1	2.1	14567085	630	0.75	21338	32303	
SLV 8	0	-95259	6861	-1580	1409437	140127	3.36	3.36	19330942	630	1.01	28502	39386	
SLV 8	500	-60785	8806	2371	-630525	103655	2.14	2.14	14800368	630	0.76	21607	32597	
SLV 9	0	-112198	-9926	1581	-2720556	-139853	3.96	3.96	20532487	630	1.12	31890	42324	
SLV 9	500	-69578	-670	-2404	-722532	-104955	2.45	2.45	16221694	630	0.82	23366	34456	
SLV 10	0	-112500	-8231	1586	-2367696	-140145	3.97	3.97	20547788	630	1.13	31950	42375	
SLV 10	500	-70922	433	-2401	-890011	-104884	2.5	2.5	16422915	630	0.83	23634	34731	
SLV 11	0	-98548	-10745	-1699	-2877813	150124	3.48	3.48	19617112	630	1.03	29160	39973	
SLV 11	500	-57048	-2234	2332	-307573	94135	2.01	2.01	14141336	630	0.74	20860	31774	
SLV 12	0	-98850	-9049	-1693	-2524953	149832	3.49	3.49	19642115	630	1.03	29220	40027	
SLV 12	500	-58392	-1131	2335	-475052	94206	2.06	2.06	14382186	630	0.75	21128	32072	
SLV 13	0	-111626	-28688	301	-7347715	-27053	3.94	3.94	20502951	630	1.12	31775	42228	
SLV 13	500	-62470	-12754	-788	-404455	-46293	2.2	2.2	15086879	630	0.77	21944	32961	
SLV 14	0	-111898	-27165	306	-7030861	-27315	3.95	3.95	20517066	630	1.12	31830	42274	
SLV 14	500	-63677	-11764	-786	-554845	-46229	2.25	2.25	15287949	630	0.78	22185	33220	
SLV 15	0	-107531	-28933	-683	-7394892	59941	3.79	3.79	20268861	630	1.09	30956	41535	
SLV 15	500	-58711	-13224	632	-279968	13434	2.07	2.07	14438691	630	0.75	21192	32143	
SLV 16	0	-107803	-27411	-677	-7078038	59678	3.8	3.8	20285589	630	1.09	31011	41582	
SLV 16	500	-59918	-12233	635	-430357	13498	2.11	2.11	14650437	630	0.76	21434	32408	

Verifica a pressoflessione fuori piano D.M. 14-01-08 (N.T.C.)
quota 200 Ta 0 Wa 0.1 denominatore 8

comb.	fd	Sa	x	N	M	Mc	c.s.	
SLV 1	11	0.24	13.5	-80339	101587	1265240	12.45	
SLV 2	11	0.24	13.58	-80817	101587	1269527	12.5	
SLV 3	11	0.24	12.82	-76265	101587	1227197	12.08	
SLV 4	11	0.24	12.9	-76744	101587	1231811	12.13	
SLV 5	11	0.24	15.27	-90841	101587	1350469	13.29	
SLV 6	11	0.24	15.36	-91374	101587	1354300	13.33	
SLV 7	11	0.24	12.99	-77264	101587	1236779	12.17	
SLV 8	11	0.24	13.08	-77797	101587	1241825	12.22	
SLV 9	11	0.24	16.1	-95793	101587	1384226	13.63	
SLV 10	11	0.24	16.19	-96326	101587	1387612	13.66	
SLV 11	11	0.24	13.82	-82216	101587	1281835	12.62	
SLV 12	11	0.24	13.91	-82749	101587	1286438	12.66	
SLV 13	11	0.24	16.28	-96846	101587	1390870	13.69	
SLV 14	11	0.24	16.36	-97324	101587	1393829	13.72	
SLV 15	11	0.24	15.59	-92773	101587	1364127	13.43	
SLV 16	11	0.24	15.67	-93251	101587	1367413	13.46	

Verifica dei meccanismi locali di collasso con analisi cinematica lineare
accelerazione limite = 92,39; forza di aggancio al piano = 30

combinazione	N top	N base	V orto	alfa0	M*	e*	a0*	
SLV 1	-70445	-99654	-667	0.285	91.4	0.94	220	
SLV 2	-71652	-99925	-665	0.281	92.622	0.941	217	
SLV 3	-66686	-95559	753	0.294	87.595	0.938	228	
SLV 4	-67893	-95830	756	0.291	88.816	0.938	225	
SLV 5	-71971	-108606	-2367	0.26	92.945	0.941	201	
SLV 6	-73315	-108908	-2365	0.257	94.307	0.942	198	
SLV 7	-59441	-94957	2368	0.296	80.269	0.933	230	
SLV 8	-60785	-95259	2371	0.291	81.627	0.934	227	
SLV 9	-69578	-112198	-2404	0.266	90.522	0.939	206	
SLV 10	-70922	-112500	-2401	0.262	91.883	0.94	203	
SLV 11	-57048	-98548	2332	0.305	77.853	0.931	238	

combinazione	N top	N base	V orto	alfa0	M*	e*	a0*	
SLV 12	-58392	-98850	2335	0.3	79.21	0.932	234	
SLV 13	-62470	-111626	-788	0.307	83.33	0.935	239	
SLV 14	-63677	-111898	-786	0.303	84.551	0.936	236	
SLV 15	-58711	-107531	632	0.323	79.532	0.933	251	
SLV 16	-59918	-107803	635	0.318	80.751	0.933	248	

Maschio 18
Dati geometrici

X ini.	Y ini.	X fin.	Y fin.	quota i.	quota.s	l	sp.	h netta	h ini.	h fin.	a
1650	1522.5	1020	1522.5	L1	L2	630	85	400	500	500	

Materiale: Muratura in pietrame consolidata con iniezioni LC1
f medio 30
tau 0.9
E 24000
G 8053.69
Fattore di confidenza 1.35

Verifica a pressoflessione per azioni non sismiche 4.5.6.2 D.M. 14-01-08 (N.T.C.) gammaM 3

comb.	quota	N	M	p	es1	es2	ea	ev	e ver (cm)	Ft	Fl	Nu (daN)	
1	500	-69415	-1794677	1	-6.01	0	2	0,00	8,01	0,69	0,87	238987	
1	200	-107985	-895902	1	-6.01	0	2	0,00	4,00	0,82	0,96	313727	
1	0	-137103	-1477669	1	-6.01	0	2	0,00	8,01	0,69	0,95	259451	
2	500	-70517	-1767075	1	-5.99	0	2	0,00	7,99	0,69	0,88	240173	
2	200	-109635	-860390	1	-5.99	0	2	0,00	4,00	0,83	0,96	314549	
2	0	-139169	-1492793	1	-5.99	0	2	0,00	7,99	0,69	0,95	259636	
3	500	-73985	-2148697	1	-5.95	0	2	0,00	7,95	0,69	0,86	235079	
3	200	-115331	-1127160	1	-5.95	0	2	0,00	3,98	0,83	0,95	311715	
3	0	-146701	-1698504	1	-5.95	0	2	0,00	7,95	0,69	0,94	258827	
4	500	-74370	-2339852	1	-5.95	0	2	0,00	7,95	0,69	0,84	231824	
4	200	-116122	-1277002	1	-5.95	0	2	0,00	3,97	0,83	0,95	309762	
4	0	-147864	-1771543	1	-5.95	0	2	0,00	7,95	0,69	0,94	258319	
5	500	-74921	-2326051	1	-5.94	0	2	0,00	7,94	0,69	0,85	232434	
5	200	-116947	-1259246	1	-5.94	0	2	0,00	3,97	0,83	0,95	310175	
5	0	-148896	-1779104	1	-5.94	0	2	0,00	7,94	0,69	0,94	258413	
6	500	-73029	-1968675	1	-5.96	0	2	0,00	7,96	0,69	0,87	237861	
6	200	-113912	-959790	1	-5.96	0	2	0,00	3,98	0,83	0,96	313853	
6	0	-144828	-1545210	1	-5.96	0	2	0,00	7,96	0,69	0,95	260005	
7	500	-74130	-1941073	1	-5.95	0	2	0,00	7,95	0,69	0,87	239007	
7	200	-115561	-924278	1	-5.95	0	2	0,00	3,97	0,83	0,96	314632	
7	0	-146893	-1560334	1	-5.95	0	2	0,00	7,95	0,69	0,95	260172	
8	500	-77599	-2322695	1	-5.91	0	2	0,00	7,91	0,69	0,85	234194	
8	200	-121257	-1191048	1	-5.91	0	2	0,00	3,96	0,83	0,95	311930	
8	0	-154425	-1766045	1	-5.91	0	2	0,00	7,91	0,69	0,94	259379	
9	500	-77984	-2513850	1	-5.91	0	2	0,00	7,91	0,69	0,84	231089	
9	200	-122049	-1340890	1	-5.91	0	2	0,00	3,95	0,83	0,95	310070	
9	0	-155588	-1839083	1	-5.91	0	2	0,00	7,91	0,69	0,94	258892	
10	500	-78535	-2500048	1	-5.9	0	2	0,00	7,90	0,69	0,84	231677	
10	200	-122873	-1323134	1	-5.9	0	2	0,00	3,95	0,83	0,95	310461	
10	0	-156621	-1846645	1	-5.9	0	2	0,00	7,90	0,69	0,94	258978	
11	500	-90239	-2333081	1	-6.01	0	2	0,00	8,01	0,69	0,87	238987	
11	200	-140381	-1164673	1	-6.01	0	2	0,00	4,00	0,82	0,96	313727	
11	0	-178234	-1920970	1	-6.01	0	2	0,00	8,01	0,69	0,95	259451	
12	500	-91341	-2305478	1	-6	0	2	0,00	8,00	0,69	0,88	239902	
12	200	-142031	-1129161	1	-6	0	2	0,00	4,00	0,82	0,96	314362	
12	0	-180300	-1936094	1	-6	0	2	0,00	8,00	0,69	0,95	259594	
13	500	-94809	-2687100	1	-5.96	0	2	0,00	7,96	0,69	0,86	235939	
13	200	-147726	-1395931	1	-5.96	0	2	0,00	3,98	0,83	0,95	312156	
13	0	-187832	-2141805	1	-5.96	0	2	0,00	7,96	0,69	0,94	258964	
14	500	-95194	-2878255	1	-5.96	0	2	0,00	7,96	0,69	0,85	233394	
14	200	-148518	-1545773	1	-5.96	0	2	0,00	3,98	0,83	0,95	310628	
14	0	-188995	-2214843	1	-5.96	0	2	0,00	7,96	0,69	0,94	258565	
15	500	-95745	-2864454	1	-5.96	0	2	0,00	7,96	0,69	0,85	233862	
15	200	-149343	-1528017	1	-5.96	0	2	0,00	3,98	0,83	0,95	310946	
15	0	-190027	-2222405	1	-5.96	0	2	0,00	7,96	0,69	0,94	258638	
16	500	-93853	-2507078	1	-5.97	0	2	0,00	7,97	0,69	0,87	238111	
16	200	-146307	-1228561	1	-5.97	0	2	0,00	3,99	0,83	0,96	313825	
16	0	-185959	-1988511	1	-5.97	0	2	0,00	7,97	0,69	0,95	259882	
17	500	-94955	-2479476	1	-5.96	0	2	0,00	7,96	0,69	0,87	239003	
17	200	-147957	-1193048	1	-5.96	0	2	0,00	3,98	0,83	0,96	314433	
17	0	-188024	-2003634	1	-5.96	0	2	0,00	7,96	0,69	0,95	260014	
18	500	-98423	-2861098	1	-5.93	0	2	0,00	7,93	0,69	0,86	235211	
18	200	-153653	-1459819	1	-5.93	0	2	0,00	3,97	0,83	0,95	312309	
18	0	-195556	-2209346	1	-5.93	0	2	0,00	7,93	0,69	0,94	259393	
19	500	-98808	-3052253	1	-5.93	0	2	0,00	7,93	0,69	0,85	232759	
19	200	-154444	-1609661	1	-5.93	0	2	0,00	3,96	0,83	0,95	310838	
19	0	-196719	-2282384	1	-5.93	0	2	0,00	7,93	0,69	0,94	259008	
20	500	-99359	-3038452	1	-5.92	0	2	0,00	7,92	0,69	0,85	233214	
20	200	-155269	-1591905	1	-5.92	0	2	0,00	3,96	0,83	0,95	311143	
20	0	-197752	-2289946	1	-5.92	0	2	0,00	7,92	0,69	0,94	259075	

Verifica a taglio con rottura per fessurazione diagonale per azioni non sismiche Circ.617 C8.7.1.5 gammaM 3

comb.	quota	Vd	N	ftd	b	sigma0	Vu	c.s.	
SLU 1	250	-2427	-100611	0.33	1	1.88	45984	18.95	
SLU 1	0	-2424	-137103	0.33	1	2.56	52592	21.7	
SLU 2	250	-2688	-102203	0.33	1	1.91	46292	17.22	
SLU 2	0	-2684	-139169	0.33	1	2.6	52941	19.73	
SLU 3	250	-2712	-107604	0.33	1	2.01	47322	17.45	
SLU 3	0	-2695	-146701	0.33	1	2.74	54196	20.11	
SLU 4	250	-2461	-108326	0.33	1	2.02	47458	19.29	
SLU 4	0	-2440	-147864	0.33	1	2.76	54387	22.29	
SLU 5	250	-2591	-109122	0.33	1	2.04	47607	18.37	
SLU 5	0	-2570	-148896	0.33	1	2.78	54557	21.23	
SLU 6	250	-2700	-106257	0.33	1	1.98	47067	17.43	
SLU 6	0	-2689	-144828	0.33	1	2.7	53887	20.04	

muratura

comb.	quota	Vd	N	ftd	b	sigma0	Vu	c.s.	
SLU 7	250	-2961	-107849	0.33	1	2.01	47368	16	
SLU 7	0	-2948	-146893	0.33	1	2.74	54228	18.39	
SLU 8	250	-2985	-113250	0.33	1	2.11	48375	16.21	
SLU 8	0	-2960	-154425	0.33	1	2.88	55454	18.74	
SLU 9	250	-2734	-113973	0.33	1	2.13	48508	17.75	
SLU 9	0	-2705	-155588	0.33	1	2.91	55641	20.57	
SLU 10	250	-2864	-114769	0.33	1	2.14	48654	16.99	
SLU 10	0	-2835	-156621	0.33	1	2.92	55806	19.69	
SLU 11	250	-3155	-130794	0.33	1	2.44	51510	16.33	
SLU 11	0	-3151	-178234	0.33	1	3.33	59162	18.77	
SLU 12	250	-3416	-132386	0.33	1	2.47	51785	15.16	
SLU 12	0	-3411	-180300	0.33	1	3.37	59472	17.43	
SLU 13	250	-3440	-137787	0.33	1	2.57	52708	15.32	
SLU 13	0	-3422	-187832	0.33	1	3.51	60592	17.7	
SLU 14	250	-3189	-138510	0.33	1	2.59	52830	16.57	
SLU 14	0	-3168	-188995	0.33	1	3.53	60763	19.18	
SLU 15	250	-3320	-139306	0.33	1	2.6	52964	15.96	
SLU 15	0	-3297	-190027	0.33	1	3.55	60915	18.47	
SLU 16	250	-3428	-136440	0.33	1	2.55	52479	15.31	
SLU 16	0	-3416	-185959	0.33	1	3.47	60316	17.66	
SLU 17	250	-3689	-138033	0.33	1	2.58	52749	14.3	
SLU 17	0	-3676	-188024	0.33	1	3.51	60621	16.49	
SLU 18	250	-3713	-143433	0.33	1	2.68	53655	14.45	
SLU 18	0	-3687	-195556	0.33	1	3.65	61720	16.74	
SLU 19	250	-3462	-144156	0.33	1	2.69	53776	15.53	
SLU 19	0	-3432	-196719	0.33	1	3.67	61887	18.03	
SLU 20	250	-3592	-144952	0.33	1	2.71	53907	15.01	
SLU 20	0	-3562	-197752	0.33	1	3.69	62036	17.42	

Verifica a pressoflessione nel piano (7.8.2.2) e taglio con rottura per fessurazione diagonale (C8.7.1.5), gammaM = 2

comb.	quota	N	V par	V orto	M	M orto	N/(l*sp)	N/(l'*sp)	Mu	l'	fvd	Vt scorr.	Vt fess.diag.	
SLV 1	0	-119097	40172	-1119	11040170	82815	2.22	2.22	28681176	630	0.78	41669	62496	
SLV 1	500	-53512	33138	3333	-1998384	335671	1	1	15072716	630	0.53	28552	46365	
SLV 2	0	-120868	34627	-1032	9043528	76994	2.26	2.26	28974410	630	0.78	42024	62874	
SLV 2	500	-57898	28212	3597	-2011016	358220	1.08	1.08	16150113	630	0.55	29430	47614	
SLV 3	0	-136384	39416	-3148	11044746	233433	2.55	2.55	31375825	630	0.84	45127	66095	
SLV 3	500	-54613	33062	6433	-2293007	455289	1.02	1.02	15345514	630	0.54	28773	46682	
SLV 4	0	-138155	33872	-3060	9048105	227613	2.58	2.58	31630915	630	0.85	45481	66453	
SLV 4	500	-59000	28136	6696	-2305639	477837	1.1	1.1	16416892	630	0.55	29650	47923	
SLV 5	0	-109873	13630	2353	3010350	-203873	2.05	2.05	27091091	630	0.74	39825	60488	
SLV 5	500	-63569	13937	931	-1561330	262152	1.19	1.19	17507339	630	0.57	30564	49183	
SLV 6	0	-111846	7456	2451	786817	-210355	2.09	2.09	27440066	630	0.75	40219	60923	
SLV 6	500	-68454	8452	1224	-1575397	287263	1.28	1.28	18644450	630	0.59	31541	50495	
SLV 7	0	-167497	11112	-4410	3025606	298190	3.13	3.13	35287666	630	0.96	51349	72122	
SLV 7	500	-67241	13683	11262	-2543405	660876	1.26	1.26	18364786	630	0.58	31298	50172	
SLV 8	0	-169469	4937	-4312	802073	291707	3.16	3.16	35495043	630	0.97	51744	72488	
SLV 8	500	-72126	8197	11556	-2557472	685987	1.35	1.35	19479554	630	0.6	32275	51459	
SLV 9	0	-119340	-10145	3305	-3965015	-299270	2.23	2.23	28721690	630	0.78	41718	62548	
SLV 9	500	-73505	-2837	1984	-1481949	319850	1.37	1.37	19788807	630	0.61	32551	51817	
SLV 10	0	-121313	-16320	3402	-6188548	-305752	2.27	2.27	29047402	630	0.79	42113	62969	
SLV 10	500	-78390	-8322	2278	-1496017	344961	1.46	1.46	20865457	630	0.63	33528	53064	
SLV 11	0	-176964	-12663	-3458	-3949759	202792	3.3	3.3	36238711	630	0.99	53243	73859	
SLV 11	500	-77176	-3091	12315	-2464024	718575	1.44	1.44	20600810	630	0.62	33285	52757	
SLV 12	0	-178937	-18838	-3361	-6173291	196310	3.34	3.34	36422824	630	1	53637	74215	
SLV 12	500	-82061	-8577	12609	-2478092	743686	1.53	1.53	21655117	630	0.64	34262	53982	
SLV 13	0	-150654	-39079	2053	-12211047	-235175	2.81	2.81	33319737	630	0.9	47981	68925	
SLV 13	500	-86630	-22776	6844	-1733783	528000	1.62	1.62	22614309	630	0.66	35176	55104	
SLV 14	0	-152426	-44624	2140	-14207688	-240996	2.85	2.85	33543338	630	0.9	48335	69268	
SLV 14	500	-91017	-27702	7107	-1746415	550549	1.7	1.7	23510735	630	0.67	36053	56159	
SLV 15	0	-167941	-39835	24	-12206470	-84557	3.14	3.14	35334831	630	0.96	51438	72205	
SLV 15	500	-87732	-22852	9943	-2028405	647617	1.64	1.64	22841663	630	0.66	35396	55371	
SLV 16	0	-169713	-45379	111	-14203111	-90377	3.17	3.17	35520288	630	0.97	51793	72532	
SLV 16	500	-92119	-27778	10207	-2041037	670166	1.72	1.72	23732070	630	0.68	36274	56421	

Verifica a pressoflessione fuori piano D.M. 14-01-08 (N.T.C.)
quota 200 Ta 0 Wa 0.19 denominatore 8

comb.	fd	Sa	x	N	M	Mc	c.s.	
SLV 1	11	0.24	13.37	-79541	191887	2848840	14.85	
SLV 2	11	0.24	14.25	-84767	191887	2998785	15.63	
SLV 3	11	0.24	14.87	-88478	191887	3102478	16.17	
SLV 4	11	0.24	15.75	-93704	191887	3244573	16.91	
SLV 5	11	0.24	14.74	-87677	191887	3080273	16.05	
SLV 6	11	0.24	15.71	-93496	191887	3239009	16.88	
SLV 7	11	0.24	19.74	-117466	191887	3832798	19.97	
SLV 8	11	0.24	20.72	-123286	191887	3962397	20.65	
SLV 9	11	0.24	17.45	-103841	191887	3507116	18.28	
SLV 10	11	0.24	18.43	-109661	191887	3650041	19.02	
SLV 11	11	0.24	22.46	-133631	191887	4178710	21.78	
SLV 12	11	0.24	23.44	-139451	191887	4292497	22.37	
SLV 13	11	0.24	22.42	-133423	191887	4174541	21.76	
SLV 14	11	0.24	23.3	-138649	191887	4277161	22.29	
SLV 15	11	0.24	23.93	-142360	191887	4347247	22.66	
SLV 16	11	0.24	24.8	-147586	191887	4442018	23.15	

Verifica dei meccanismi locali di collasso con analisi cinematica lineare
accelerazione limite = 92,39; forza di aggancio al piano = 30

combinazione	N top	N base	V orto	alfa0	M*	e*	a0*	
SLV 1	-53512	-119097	3333	0.341	92.743	0.904	274	
SLV 2	-57898	-120868	3597	0.325	97.078	0.907	260	
SLV 3	-54613	-136384	6433	0.298	93.83	0.905	239	
SLV 4	-59000	-138155	6696	0.284	98.169	0.907	228	
SLV 5	-63569	-109873	931	0.341	102.705	0.91	272	
SLV 6	-68454	-111846	1224	0.326	107.571	0.913	259	
SLV 7	-67241	-167497	11262	0.218	106.361	0.912	174	
SLV 8	-72126	-169469	11556	0.209	111.236	0.915	166	
SLV 9	-73505	-119340	1984	0.306	112.615	0.916	243	
SLV 10	-78390	-121313	2278	0.294	117.505	0.918	233	

combinazione	N top	N base	V orto	alfa0	M*	e*	a0*	
SLV 11	-77176	-176964	12315	0.196	116.289	0.918	156	
SLV 12	-82061	-178937	12609	0.19	121.186	0.92	150	
SLV 13	-86630	-150654	6844	0.238	125.774	0.922	188	
SLV 14	-91017	-152426	7107	0.231	130.184	0.924	182	
SLV 15	-87732	-167941	9943	0.209	126.88	0.923	165	
SLV 16	-92119	-169713	10207	0.203	131.292	0.925	160	

Maschio 19
Dati geometrici

X ini.	Y ini.	X fin.	Y fin.	quota i.	quota.s	l	sp.	h netta	h ini.	h fin.	a
1300	1165	1300	142.5	L1	L2	1022.5	100	400	500	500	

Materiale: Muratura in pietrame consolidata con iniezioni LC1
f medio 30
tau 0.9
E 24000
G 8053.69
Fattore di confidenza 1.35

Verifica a pressoflessione per azioni non sismiche 4.5.6.2 D.M. 14-01-08 (N.T.C.) gammaM 3

comb.	quota	N	M	p	es1	es2	ea	ev	e ver (cm)	Ft	Fl	Nu (daN)	
1	500	-175937	-2016043	1	0	-0.3	2	0,00	2,30	0,90	0,97	660966	
1	200	-256269	-10999183	1	0	-0.3	2	0,00	2,00	0,91	0,87	601344	
1	0	-307346	-19603120	1	0	-0.3	2	0,00	2,30	0,90	0,81	551616	
2	500	-181829	-1978764	1	0	-0.29	2	0,00	2,29	0,90	0,97	662392	
2	200	-262121	-11220097	1	0	-0.29	2	0,00	2,00	0,91	0,87	601588	
2	0	-312825	-20049404	1	0	-0.29	2	0,00	2,29	0,90	0,80	551153	
3	500	-206496	-1843282	1	0	-0.35	2	0,00	2,35	0,90	0,97	665108	
3	200	-284598	-12211744	1	0	-0.35	2	0,00	2,00	0,91	0,87	601368	
3	0	-333090	-21674931	1	0	-0.35	2	0,00	2,35	0,90	0,80	547971	
4	500	-211176	-1822497	1	0	-0.38	2	0,00	2,38	0,90	0,97	664995	
4	200	-288378	-12415822	1	0	-0.38	2	0,00	2,00	0,91	0,87	601062	
4	0	-336296	-21925302	1	0	-0.38	2	0,00	2,38	0,90	0,80	547110	
5	500	-214122	-1803858	1	0	-0.38	2	0,00	2,38	0,90	0,97	665544	
5	200	-291304	-12526279	1	0	-0.38	2	0,00	2,00	0,91	0,87	601175	
5	0	-339035	-22148444	1	0	-0.38	2	0,00	2,38	0,90	0,80	546936	
6	500	-200985	-1940640	1	0	-0.35	2	0,00	2,35	0,90	0,97	663473	
6	200	-279782	-12003976	1	0	-0.35	2	0,00	2,00	0,91	0,87	601377	
6	0	-328948	-21294413	1	0	-0.35	2	0,00	2,35	0,90	0,80	548581	
7	500	-206877	-1903361	1	0	-0.34	2	0,00	2,34	0,90	0,97	664654	
7	200	-285634	-12224889	1	0	-0.34	2	0,00	2,00	0,91	0,87	601600	
7	0	-334428	-21740697	1	0	-0.34	2	0,00	2,34	0,90	0,80	548201	
8	500	-231544	-1767879	1	0	-0.39	2	0,00	2,39	0,90	0,98	666825	
8	200	-308111	-13216536	1	0	-0.39	2	0,00	2,00	0,91	0,87	601397	
8	0	-354693	-23366225	1	0	-0.39	2	0,00	2,39	0,90	0,80	545492	
9	500	-236224	-1747094	1	0	-0.42	2	0,00	2,42	0,90	0,98	666687	
9	200	-311892	-13420614	1	0	-0.42	2	0,00	2,00	0,91	0,87	601113	
9	0	-357898	-23616596	1	0	-0.42	2	0,00	2,42	0,90	0,80	544744	
10	500	-239170	-1728454	1	0	-0.41	2	0,00	2,41	0,90	0,98	667158	
10	200	-314818	-13531071	1	0	-0.41	2	0,00	2,00	0,91	0,87	601217	
10	0	-360638	-23839738	1	0	-0.41	2	0,00	2,41	0,90	0,80	544596	
11	500	-228718	-2620856	1	0	-0.3	2	0,00	2,30	0,90	0,97	660966	
11	200	-333150	-14298938	1	0	-0.3	2	0,00	2,00	0,91	0,87	601344	
11	0	-399549	-25484056	1	0	-0.3	2	0,00	2,30	0,90	0,81	551616	
12	500	-234610	-2583577	1	0	-0.29	2	0,00	2,29	0,90	0,97	662071	
12	200	-339002	-14519852	1	0	-0.29	2	0,00	2,00	0,91	0,87	601532	
12	0	-405029	-25930340	1	0	-0.29	2	0,00	2,29	0,90	0,80	551259	
13	500	-259277	-2448095	1	0	-0.34	2	0,00	2,34	0,90	0,97	664266	
13	200	-361478	-15511499	1	0	-0.34	2	0,00	2,00	0,91	0,87	601363	
13	0	-425294	-27555867	1	0	-0.34	2	0,00	2,34	0,90	0,80	548748	
14	500	-263957	-2427310	1	0	-0.36	2	0,00	2,36	0,90	0,97	664192	
14	200	-365259	-15715577	1	0	-0.36	2	0,00	2,00	0,91	0,87	601121	
14	0	-428499	-27806238	1	0	-0.36	2	0,00	2,36	0,90	0,80	548055	
15	500	-266903	-2408670	1	0	-0.36	2	0,00	2,36	0,90	0,97	664642	
15	200	-368185	-15826034	1	0	-0.36	2	0,00	2,00	0,91	0,87	601210	
15	0	-431239	-28029380	1	0	-0.36	2	0,00	2,36	0,90	0,80	547912	
16	500	-253766	-2545453	1	0	-0.34	2	0,00	2,34	0,90	0,97	662953	
16	200	-356663	-15303731	1	0	-0.34	2	0,00	2,00	0,91	0,87	601370	
16	0	-421152	-27175349	1	0	-0.34	2	0,00	2,34	0,90	0,80	549233	
17	500	-259658	-2508174	1	0	-0.33	2	0,00	2,33	0,90	0,97	663906	
17	200	-362515	-15524644	1	0	-0.33	2	0,00	2,00	0,91	0,87	601546	
17	0	-426631	-27621633	1	0	-0.33	2	0,00	2,33	0,90	0,80	548927	
18	500	-284325	-2372692	1	0	-0.37	2	0,00	2,37	0,90	0,97	665741	
18	200	-384992	-16516291	1	0	-0.37	2	0,00	2,00	0,91	0,87	601386	
18	0	-446896	-29247161	1	0	-0.37	2	0,00	2,37	0,90	0,80	546717	
19	500	-289005	-2351907	1	0	-0.4	2	0,00	2,40	0,90	0,98	665647	
19	200	-388772	-16720369	1	0	-0.4	2	0,00	2,00	0,91	0,87	601159	
19	0	-450102	-29497531	1	0	-0.4	2	0,00	2,40	0,90	0,80	546098	
20	500	-291951	-2333267	1	0	-0.39	2	0,00	2,39	0,90	0,98	666044	
20	200	-391698	-16830826	1	0	-0.39	2	0,00	2,00	0,91	0,87	601242	
20	0	-452842	-29720673	1	0	-0.39	2	0,00	2,39	0,90	0,80	545973	

Verifica a taglio con rottura per fessurazione diagonale per azioni non sismiche Circ.617 C8.7.1.5 gammaM 3

comb.	quota	Vd	N	ftd	b	sigma0	Vu	c.s.	
SLU 1	250	-8226	-242791	0.33	1	2.37	97143	11.81	
SLU 1	0	-9144	-307346	0.33	1	3.01	107875	11.8	
SLU 2	250	-7884	-248689	0.33	1	2.43	98172	12.45	
SLU 2	0	-8822	-312825	0.33	1	3.06	108737	12.33	
SLU 3	250	-6180	-271590	0.33	1	2.66	102070	16.52	
SLU 3	0	-7184	-333090	0.33	1	3.26	111868	15.57	
SLU 4	250	-5792	-275507	0.33	1	2.69	102722	17.74	
SLU 4	0	-6804	-336296	0.33	1	3.29	112355	16.51	
SLU 5	250	-5620	-278456	0.33	1	2.72	103210	18.36	
SLU 5	0	-6643	-339035	0.33	1	3.32	112770	16.98	
SLU 6	250	-6572	-266649	0.33	1	2.61	101242	15.41	

muratura

comb.	quota	Vd	N	ftd	b	sigma0	Vu	c.s.	
SLU 6	0	-7562	-328948	0.33	1	3.22	111235	14.71	
SLU 7	250	-6229	-272546	0.33	1	2.67	102230	16.41	
SLU 7	0	-7240	-334428	0.33	1	3.27	112072	15.48	
SLU 8	250	-4525	-295448	0.33	1	2.89	105979	23.42	
SLU 8	0	-5603	-354693	0.33	1	3.47	115112	20.55	
SLU 9	250	-4137	-299365	0.33	1	2.93	106607	25.77	
SLU 9	0	-5223	-357898	0.33	1	3.5	115586	22.13	
SLU 10	250	-3966	-302314	0.33	1	2.96	107077	27	
SLU 10	0	-5062	-360638	0.33	1	3.53	115989	22.91	
SLU 11	250	-10694	-315628	0.33	1	3.09	109176	10.21	
SLU 11	0	-11887	-399549	0.33	1	3.91	121572	10.23	
SLU 12	250	-10352	-321526	0.33	1	3.14	110092	10.63	
SLU 12	0	-11565	-405029	0.33	1	3.96	122337	10.58	
SLU 13	250	-8648	-344427	0.33	1	3.37	113582	13.13	
SLU 13	0	-9927	-425294	0.33	1	4.16	125128	12.6	
SLU 14	250	-8259	-348344	0.33	1	3.41	114168	13.82	
SLU 14	0	-9547	-428499	0.33	1	4.19	125564	13.15	
SLU 15	250	-8088	-351293	0.33	1	3.44	114608	14.17	
SLU 15	0	-9386	-431239	0.33	1	4.22	125935	13.42	
SLU 16	250	-9039	-339486	0.33	1	3.32	112838	12.48	
SLU 16	0	-10306	-421152	0.33	1	4.12	124563	12.09	
SLU 17	250	-8697	-345384	0.33	1	3.38	113726	13.08	
SLU 17	0	-9983	-426631	0.33	1	4.17	125310	12.55	
SLU 18	250	-6993	-368285	0.33	1	3.6	117107	16.75	
SLU 18	0	-8346	-446896	0.33	1	4.37	128037	15.34	
SLU 19	250	-6605	-372202	0.33	1	3.64	117676	17.82	
SLU 19	0	-7966	-450102	0.33	1	4.4	128463	16.13	
SLU 20	250	-6433	-375151	0.33	1	3.67	118102	18.36	
SLU 20	0	-7805	-452842	0.33	1	4.43	128826	16.51	

Verifica a pressoflessione nel piano (7.8.2.2) e taglio con rottura per fessurazione diagonale (C8.7.1.5), gammaM = 2

comb.	quota	N	V par	V orto	M	M orto	N/(l*sp)	N/(l'*sp)	Mu	l'	fvd	Vt scorr.	Vt fess.diag.	
SLV 1	0	-334631	18640	-5418	-21222673	281873	3.27	3.27	111797606	1022.5	0.99	101009	140434	
SLV 1	500	-207438	4698	5293	-1781116	245852	2.03	2.03	83271938	1022.5	0.74	75571	114974	
SLV 2	0	-332905	27228	-5417	-19265300	282096	3.26	3.26	111525184	1022.5	0.98	100664	140120	
SLV 2	500	-208480	12362	5275	-1227195	245632	2.04	2.04	83575165	1022.5	0.74	75779	115206	
SLV 3	0	-334990	-22165	-5358	-30778466	291517	3.28	3.28	111854021	1022.5	0.99	101081	140500	
SLV 3	500	-197324	-31906	5434	-4261150	252238	1.93	1.93	80268291	1022.5	0.72	73548	112703	
SLV 4	0	-333265	-13577	-5357	-28821093	291740	3.26	3.26	111582257	1022.5	0.99	100736	140185	
SLV 4	500	-198366	-24241	5416	-3707229	252019	1.94	1.94	80582676	1022.5	0.72	73756	112939	
SLV 5	0	-329821	58651	-2642	-7506703	106795	3.23	3.23	111030639	1022.5	0.98	100048	139556	
SLV 5	500	-216926	38849	1666	1652759	70719	2.12	2.12	85991072	1022.5	0.76	77469	117065	
SLV 6	0	-327899	68215	-2640	-5326902	107043	3.21	3.21	110717274	1022.5	0.97	99663	139204	
SLV 6	500	-218087	47385	1646	2269626	70474	2.13	2.13	86317029	1022.5	0.76	77701	117318	
SLV 7	0	-331021	-77366	-2443	-39359347	138940	3.24	3.24	111224264	1022.5	0.98	100288	139776	
SLV 7	500	-183211	-83162	2135	-6614020	92008	1.79	1.79	75896373	1022.5	0.69	70726	109455	
SLV 8	0	-329099	-67802	-2441	-37179546	139189	3.22	3.22	110913341	1022.5	0.98	99903	139424	
SLV 8	500	-184372	-74626	2115	-5997154	91763	1.8	1.8	76263747	1022.5	0.69	70958	109726	
SLV 9	0	-325975	52559	-203	-5210624	-33618	3.19	3.19	110399609	1022.5	0.97	99278	138850	
SLV 9	500	-214995	31892	-1303	2143024	-73019	2.1	2.1	85445345	1022.5	0.75	77082	116642	
SLV 10	0	-324053	62123	-201	-3030823	-33370	3.17	3.17	110078417	1022.5	0.97	98894	138495	
SLV 10	500	-216155	40428	-1323	2759890	-73264	2.11	2.11	85773674	1022.5	0.76	77314	116896	
SLV 11	0	-327175	-83458	-3	-37063269	-1472	3.2	3.2	110598121	1022.5	0.97	99518	139070	
SLV 11	500	-181280	-90119	-834	-6123756	-51731	1.77	1.77	75281706	1022.5	0.69	70339	109003	
SLV 12	0	-325253	-73894	-1	-34883467	-1224	3.18	3.18	110279370	1022.5	0.97	99134	138717	
SLV 12	500	-182440	-81584	-854	-5506889	-51975	1.78	1.78	75651453	1022.5	0.69	70571	109275	
SLV 13	0	-321810	-1667	2713	-13569077	-186169	3.15	3.15	109698543	1022.5	0.96	98445	138081	
SLV 13	500	-201001	-18493	-4604	-146901	-233275	1.97	1.97	81372821	1022.5	0.73	74284	113534	
SLV 14	0	-320084	6922	2715	-11611704	-185946	3.13	3.13	109402693	1022.5	0.96	98100	137761	
SLV 14	500	-202043	-10829	-4622	407019	-233495	1.98	1.98	81683150	1022.5	0.73	74492	113768	
SLV 15	0	-322170	-42472	2773	-23124870	-176525	3.15	3.15	109759844	1022.5	0.96	98517	138147	
SLV 15	500	-190887	-55097	-4463	-2626935	-226889	1.87	1.87	78300234	1022.5	0.71	72261	111233	
SLV 16	0	-320444	-33884	2775	-21167498	-176302	3.13	3.13	109464652	1022.5	0.96	98172	137828	
SLV 16	500	-191928	-47432	-4481	-2073014	-227108	1.88	1.88	78621720	1022.5	0.71	72469	111472	

Verifica a pressoflessione fuori piano D.M. 14-01-08 (N.T.C.)
quota 200 Ta 0 Wa 0.22 denominatore 8

comb.	fd	Sa	x	N	M	Mc	c.s.	
SLV 1	11	0.24	29.32	-283152	366394	10006437	27.31	
SLV 2	11	0.24	29.4	-283893	366394	10021734	27.35	
SLV 3	11	0.24	28.46	-274859	366394	9831381	26.83	
SLV 4	11	0.24	28.54	-275600	366394	9847314	26.88	
SLV 5	11	0.24	30.25	-292079	366394	10186907	27.8	
SLV 6	11	0.24	30.33	-292904	366394	10203175	27.85	
SLV 7	11	0.24	27.38	-264435	366394	9601244	26.2	
SLV 8	11	0.24	27.47	-265260	366394	9619875	26.26	
SLV 9	11	0.24	30.18	-291473	366394	10174925	27.77	
SLV 10	11	0.24	30.27	-292298	366394	10191245	27.81	
SLV 11	11	0.24	27.32	-263829	366394	9587528	26.17	
SLV 12	11	0.24	27.41	-264654	366394	9606211	26.22	
SLV 13	11	0.24	29.11	-281133	366394	9964482	27.2	
SLV 14	11	0.24	29.19	-281874	366394	9979933	27.24	
SLV 15	11	0.24	28.25	-272840	366394	9787692	26.71	
SLV 16	11	0.24	28.33	-273581	366394	9803780	26.76	

Verifica dei meccanismi locali di collasso con analisi cinematica lineare
accelerazione limite = 92,39; forza di aggancio al piano = 30

combinazione	N top	N base	V orto	alfa0	M*	e*	a0*	
SLV 1	-207438	-334631	5293	0.248	282.492	0.932	193	
SLV 2	-208480	-332905	5275	0.247	283.543	0.932	193	
SLV 3	-197324	-334990	5434	0.252	272.284	0.93	197	
SLV 4	-198366	-333265	5416	0.252	273.335	0.93	197	
SLV 5	-216926	-329821	1666	0.257	292.074	0.934	200	
SLV 6	-218087	-327899	1646	0.257	293.247	0.934	200	
SLV 7	-183211	-331021	2135	0.275	258.059	0.927	215	
SLV 8	-184372	-329099	2115	0.274	259.228	0.927	215	
SLV 9	-214995	-325975	-1303	0.26	290.123	0.933	202	

combinazione	N top	N base	V orto	alfa0	M*	e*	a0*	
SLV 10	-216155	-324053	-1323	0.259	291.295	0.933	202	
SLV 11	-181280	-327175	-834	0.282	256.115	0.926	221	
SLV 12	-182440	-325253	-854	0.281	257.283	0.926	220	
SLV 13	-201001	-321810	-4604	0.254	275.994	0.93	198	
SLV 14	-202043	-320084	-4622	0.253	277.045	0.931	198	
SLV 15	-190887	-322170	-4463	0.26	265.793	0.928	203	
SLV 16	-191928	-320444	-4481	0.259	266.843	0.929	203	

Maschio 20
Dati geometrici

X ini.	Y ini.	X fin.	Y fin.	quota i.	quota.s	l	sp.	h netta	h ini.	h fin.	a
1300	1522.5	1300	1265	L1	L2	257.5	100	400	500	500	

Materiale: Muratura in pietrame consolidata con iniezioni LC1
f medio 30
tau 0.9
E 24000
G 8053.69
Fattore di confidenza 1.35

Rinforzo con rete e betoncino su entrambe le facce
Betoncino: C25/30
spessore: 3
acciaio materiale: B450C
BARRE VERTICALI
diametro (mm) 6
passo 10
ancorate ad entrambe le estremità
BARRE ORIZZONTALI
diametro (mm) 6
passo 10
ancorate ad entrambe le estremità

Verifica a pressoflessione nel piano e taglio delle sezioni rinforzate 7.8.3.2 D.M. 14-01-08 (N.T.C.)

comb.	quota sezione	gamma m.	gamma s.	gamma c.	N	V	V orto	M	M orto	c.s.	d	fvd	Vt,c	Vt,M	Vt,S	
SLU 1	0	3	1.15	1.5	-73812	1700	-9	1260489	506	4.49	257.5	0.44	57222	11232	34187	
SLU 1	500	3	1.15	1.5	-37038	8914	-25	-301636	-666	9.26	257.5	0.33	57222	8487	34187	
SLU 2	0	3	1.15	1.5	-74880	1252	-8	1240853	425	4.45	257.5	0.44	57222	11312	34187	
SLU 2	500	3	1.15	1.5	-38357	8722	-25	-278766	-673	8.95	257.5	0.33	57222	8586	34187	
SLU 3	0	3	1.15	1.5	-79261	-484	11	1179208	-1474	4.27	257.5	0.45	57222	11639	34187	
SLU 3	500	3	1.15	1.5	-44915	7651	-66	-222985	-295	7.64	257.5	0.35	57222	9075	34187	
SLU 4	0	3	1.15	1.5	-80070	-780	17	1172426	-2206	4.24	257.5	0.45	57222	11699	34187	
SLU 4	500	3	1.15	1.5	-46405	7384	-82	-221949	-125	7.39	257.5	0.36	57222	9186	34187	
SLU 5	0	3	1.15	1.5	-80604	-1004	18	1162608	-2246	4.22	257.5	0.46	57222	11739	34187	
SLU 5	500	3	1.15	1.5	-47065	7288	-83	-210514	-129	7.29	257.5	0.36	57222	9235	34187	
SLU 6	0	3	1.15	1.5	-78305	-66	1	1197551	-494	4.31	257.5	0.45	57222	11567	34187	
SLU 6	500	3	1.15	1.5	-43534	8081	-47	-231576	-545	7.88	257.5	0.35	57222	8972	34187	
SLU 7	0	3	1.15	1.5	-79373	-515	3	1177915	-575	4.27	257.5	0.45	57222	11647	34187	
SLU 7	500	3	1.15	1.5	-44854	7889	-47	-208706	-552	7.65	257.5	0.35	57222	9070	34187	
SLU 8	0	3	1.15	1.5	-83754	-2251	21	1116271	-2474	4.1	257.5	0.47	57222	11974	34187	
SLU 8	500	3	1.15	1.5	-51411	6818	-87	-152925	-174	6.67	257.5	0.37	57222	9560	34187	
SLU 9	0	3	1.15	1.5	-84563	-2547	28	1109488	-3206	4.06	257.5	0.47	57222	12035	34187	
SLU 9	500	3	1.15	1.5	-52902	6551	-104	-151889	-4	6.49	257.5	0.38	57222	9671	34187	
SLU 10	0	3	1.15	1.5	-85097	-2771	28	1099670	-3246	4.03	257.5	0.47	57222	12074	34187	
SLU 10	500	3	1.15	1.5	-53561	6455	-104	-140454	-8	6.41	257.5	0.38	57222	9720	34187	
SLU 11	0	3	1.15	1.5	-95956	2210	-12	1638636	658	3.46	257.5	0.5	57222	12885	34187	
SLU 11	500	3	1.15	1.5	-48149	11589	-32	-392127	-865	7.13	257.5	0.36	57222	9316	34187	
SLU 12	0	3	1.15	1.5	-97023	1762	-10	1618999	576	3.43	257.5	0.5	57222	12965	34187	
SLU 12	500	3	1.15	1.5	-49469	11396	-33	-369257	-873	6.94	257.5	0.37	57222	9415	34187	
SLU 13	0	3	1.15	1.5	-101404	26	8	1557355	-1322	3.32	257.5	0.52	57222	13292	34187	
SLU 13	500	3	1.15	1.5	-56026	10325	-73	-313476	-495	6.12	257.5	0.38	57222	9904	34187	
SLU 14	0	3	1.15	1.5	-102214	-270	14	1550573	-2054	3.3	257.5	0.52	57222	13352	34187	
SLU 14	500	3	1.15	1.5	-57516	10059	-90	-312440	-325	5.97	257.5	0.39	57222	10016	34187	
SLU 15	0	3	1.15	1.5	-102748	-494	15	1540754	-2095	3.29	257.5	0.52	57222	13392	34187	
SLU 15	500	3	1.15	1.5	-58176	9962	-90	-301005	-329	5.9	257.5	0.39	57222	10065	34187	
SLU 16	0	3	1.15	1.5	-100448	444	-1	1575698	-342	3.34	257.5	0.51	57222	13220	34187	
SLU 16	500	3	1.15	1.5	-54646	10756	-54	-322067	-744	6.28	257.5	0.38	57222	9801	34187	
SLU 17	0	3	1.15	1.5	-101516	-5	0	1556062	-424	3.32	257.5	0.52	57222	13300	34187	
SLU 17	500	3	1.15	1.5	-55965	10563	-55	-299197	-752	6.13	257.5	0.38	57222	9900	34187	
SLU 18	0	3	1.15	1.5	-105897	-1741	19	1494417	-2322	3.22	257.5	0.53	57222	13627	34187	
SLU 18	500	3	1.15	1.5	-62522	9492	-95	-243416	-373	5.49	257.5	0.4	57222	10389	34187	
SLU 19	0	3	1.15	1.5	-106707	-2036	25	1487635	-3054	3.2	257.5	0.53	57222	13688	34187	
SLU 19	500	3	1.15	1.5	-64013	9225	-112	-242380	-204	5.36	257.5	0.41	57222	10501	34187	
SLU 20	0	3	1.15	1.5	-107241	-2261	26	1477817	-3095	3.19	257.5	0.53	57222	13727	34187	
SLU 20	500	3	1.15	1.5	-64673	9129	-112	-230945	-208	5.31	257.5	0.41	57222	10550	34187	

Verifica a pressoflessione nel piano e taglio delle sezioni rinforzate 7.8.3.2 D.M. 14-01-08 (N.T.C.)

comb.	quota sezione	gamma m.	gamma s.	gamma c.	N	V	V orto	M	M orto	c.s.	d	fvd	Vt,c	Vt,M	Vt,S	
SLV 1	0	2	1.15	1.5	-71832	-7574	-1119	551442	71208	5.84	257.5	0.65	85833	16626	34187	
SLV 1	500	2	1.15	1.5	-44577	2067	732	76789	51958	9.41	257.5	0.53	85833	13575	34187	
SLV 2	0	2	1.15	1.5	-72801	-3806	-1096	910126	70066	5.76	257.5	0.65	85833	16735	34187	
SLV 2	500	2	1.15	1.5	-42705	5182	749	-161279	51734	9.82	257.5	0.52	85833	13365	34187	
SLV 3	0	2	1.15	1.5	-72826	-18743	-1119	-548494	79567	5.76	257.5	0.65	85833	16738	34187	
SLV 3	500	2	1.15	1.5	-52694	-7741	709	987032	55305	7.71	257.5	0.56	85833	14484	34187	
SLV 4	0	2	1.15	1.5	-73795	-14975	-1095	-189810	78424	5.68	257.5	0.65	85833	16846	34187	
SLV 4	500	2	1.15	1.5	-50822	-4626	726	748963	55081	8.25	257.5	0.55	85833	14274	34187	
SLV 5	0	2	1.15	1.5	-74289	13154	-343	2528392	8658	4.7	243.75	0.67	81250	16443	32362	
SLV 5	500	2	1.15	1.5	-32094	19866	213	-1427942	10268	10.68	238.75	0.48	79583	11552	31698	
SLV 6	0	2	1.15	1.5	-75368	17350	-317	2927835	7385	4.4	238.75	0.69	79583	16397	31698	
SLV 6	500	2	1.15	1.5	-30009	23334	231	-1693064	10019	10.05	228.75	0.48	76250	10985	30370	
SLV 7	0	2	1.15	1.5	-77602	-24077	-343	-1138061	36520	5.4	257.5	0.67	85833	17273	34187	
SLV 7	500	2	1.15	1.5	-59150	-12828	135	1606201	21425	6.33	248.75	0.6	82917	14915	33026	

muratura

comb.	quota sezione	gamma m.	gamma s.	gamma c.	N	V	V orto	M	M orto	c.s.	d	fvd	Vt,c	Vt,M	Vt,S	
SLV 8	0	2	1.15	1.5	-78682	-19881	-317	-738617	35248	5.33	257.5	0.68	85833	17393	34187	
SLV 8	500	2	1.15	1.5	-57065	-9359	153	1341079	21176	6.81	253.75	0.59	84583	14848	33689	
SLV 9	0	2	1.15	1.5	-77436	19934	323	3140453	-36654	4.2	233.75	0.7	77917	16462	31034	
SLV 9	500	2	1.15	1.5	-29419	25465	-255	-1819063	-22130	9.66	223.75	0.48	74583	10752	29706	
SLV 10	0	2	1.15	1.5	-78515	24130	349	3539896	-37926	3.94	233.75	0.71	77917	16583	31034	
SLV 10	500	2	1.15	1.5	-27334	28933	-237	-2084185	-22379	8.85	213.75	0.48	71250	10186	28379	
SLV 11	0	2	1.15	1.5	-80750	-17297	323	-526000	-8791	5.19	257.5	0.68	85833	17625	34187	
SLV 11	500	2	1.15	1.5	-56476	-7228	-333	1215079	-10973	7.01	0	0	0	0	0	
SLV 12	0	2	1.15	1.5	-81829	-13101	349	-126556	-10064	5.13	257.5	0.69	85833	17746	34187	
SLV 12	500	2	1.15	1.5	-54391	-3760	-315	949957	-11222	7.56	257.5	0.57	85833	14674	34187	
SLV 13	0	2	1.15	1.5	-82323	15028	1102	2591646	-79830	4.35	243.75	0.71	81250	17343	32362	
SLV 13	500	2	1.15	1.5	-35663	20732	-827	-1226948	-56035	10.64	253.75	0.49	84583	12451	33689	
SLV 14	0	2	1.15	1.5	-83292	18796	1125	2950330	-80973	4.13	243.75	0.72	81250	17451	32362	
SLV 14	500	2	1.15	1.5	-33790	23847	-811	-1465017	-56259	10.26	243.75	0.49	81250	11909	32362	
SLV 15	0	2	1.15	1.5	-83317	3859	1102	1491710	-71472	4.91	257.5	0.7	85833	17912	34187	
SLV 15	500	2	1.15	1.5	-43779	10924	-851	-316705	-52688	9.58	257.5	0.52	85833	13485	34187	
SLV 16	0	2	1.15	1.5	-84286	7627	1125	1850394	-72614	4.68	0	0	0	0	0	
SLV 16	500	2	1.15	1.5	-41907	14039	-834	-554774	-52912	10.01	257.5	0.52	85833	13276	34187	

Verifica a pressoflessione fuori piano muratura rinforzata D.M. 14-01-08 (N.T.C.)
quota 200 Ta 0 Wa 0.22 denominatore 8

comb.	fd	fcd	fyd	N	Sa	M	x	c.s.	
SLV 1	11	141	3913	-68470	0.24	92270	258	6.26	
SLV 2	11	141	3913	-65985	0.24	92270	258	6.5	
SLV 3	11	141	3913	-79306	0.24	92270	258	5.41	
SLV 4	11	141	3913	-76820	0.24	92270	258	5.58	
SLV 5	11	141	3913	-51981	0.24	92270	258	8.25	
SLV 6	11	141	3913	-49213	0.24	92270	258	8.71	
SLV 7	11	141	3913	-88099	0.24	92270	258	4.87	
SLV 8	11	141	3913	-85332	0.24	92270	258	5.02	
SLV 9	11	141	3913	-48561	0.24	92270	258	8.83	
SLV 10	11	141	3913	-45793	0.24	92270	258	9.36	
SLV 11	11	141	3913	-84680	0.24	92270	258	5.06	
SLV 12	11	141	3913	-81912	0.24	92270	258	5.23	
SLV 13	11	141	3913	-57072	0.24	92270	258	7.51	
SLV 14	11	141	3913	-54587	0.24	92270	258	7.85	
SLV 15	11	141	3913	-67908	0.24	92270	258	6.31	
SLV 16	11	141	3913	-65423	0.24	92270	258	6.55	

Per la verifica seguente non si considerano i rinforzi predisposti.

Verifica dei meccanismi locali di collasso con analisi cinematica lineare
accelerazione limite = 92,39; forza di aggancio al piano = 30

combinazione	N top	N base	V orto	alfa0	M*	e*	a0*	
SLV 1	-44577	-71832	732	0.275	63.416	0.925	216	
SLV 2	-42705	-72801	749	0.28	61.533	0.923	221	
SLV 3	-52694	-72826	709	0.257	71.599	0.932	200	
SLV 4	-50822	-73795	726	0.26	69.71	0.931	203	
SLV 5	-32094	-74289	213	0.331	50.906	0.912	263	
SLV 6	-30009	-75368	231	0.341	48.831	0.91	272	
SLV 7	-59150	-77602	135	0.253	78.125	0.937	196	
SLV 8	-57065	-78682	153	0.256	76.016	0.935	199	
SLV 9	-29419	-77436	-255	0.343	48.246	0.909	274	
SLV 10	-27334	-78515	-237	0.355	46.179	0.906	285	
SLV 11	-56476	-80750	-333	0.255	75.42	0.935	198	
SLV 12	-54391	-81829	-315	0.259	73.313	0.933	202	
SLV 13	-35663	-82323	-827	0.302	54.469	0.916	239	
SLV 14	-33790	-83292	-811	0.31	52.598	0.914	246	
SLV 15	-43779	-83317	-851	0.275	62.613	0.925	216	
SLV 16	-41907	-84286	-834	0.281	60.731	0.923	221	

Maschio 21
Maschio considerato membratura sismica secondaria
Dati geometrici

X ini.	Y ini.	X fin.	Y fin.	quota i.	quota.s	l	sp.	h netta	h ini.	h fin.	a
1770	142.5	1847.5	142.5	L1	L2	77.5	85	400	500	500	

Materiale: Muratura in pietrame consolidata con iniezioni LC1
f medio 30
tau 0.9
E 24000
G 8053.69
Fattore di confidenza 1.35

Verifica a pressoflessione per azioni non sismiche 4.5.6.2 D.M. 14-01-08 (N.T.C.) gammaM 3

comb.	quota	N	M	p	es1	es2	ea	ev	e ver (cm)	Ft	Fl	Nu (daN)	
1	500	-8478	39927	1	-7.08	0	2	0,00	9,08	0,67	0,81	26371	
1	200	-13731	-42705	1	-7.08	0	2	0,00	4,54	0,81	0,87	34369	
1	0	-15881	29823	1	-7.08	0	2	0,00	9,08	0,67	0,92	30081	
2	500	-8522	41036	1	-7.07	0	2	0,00	9,07	0,67	0,81	26242	
2	200	-13794	-42406	1	-7.07	0	2	0,00	4,53	0,81	0,88	34434	
2	0	-15932	30641	1	-7.07	0	2	0,00	9,07	0,67	0,92	30031	
3	500	-8689	46173	1	-7	0	2	0,00	9,00	0,67	0,79	25650	
3	200	-13997	-38638	1	-7	0	2	0,00	4,50	0,81	0,89	34987	
3	0	-16115	35462	1	-7	0	2	0,00	9,00	0,67	0,91	29740	
4	500	-8717	47265	1	-6.98	0	2	0,00	8,98	0,67	0,78	25525	
4	200	-14021	-37322	1	-6.98	0	2	0,00	4,49	0,81	0,89	35160	
4	0	-16141	36710	1	-6.98	0	2	0,00	8,98	0,67	0,91	29663	
5	500	-8739	47820	1	-6.97	0	2	0,00	8,97	0,67	0,78	25464	
5	200	-14052	-37172	1	-6.97	0	2	0,00	4,49	0,81	0,89	35190	

comb.	quota	N	M	p	es1	es2	ea	ev	e ver (cm)	Ft	Fl	Nu (daN)	
5	0	-16167	37120	1	-6.97	0	2	0,00	8,97	0,67	0,91	29639	
6	500	-8653	46276	1	-7.01	0	2	0,00	9,01	0,67	0,78	25597	
6	200	-13935	-37427	1	-7.01	0	2	0,00	4,50	0,81	0,89	35097	
6	0	-16072	35782	1	-7.01	0	2	0,00	9,01	0,67	0,91	29696	
7	500	-8697	47385	1	-7	0	2	0,00	9,00	0,67	0,78	25473	
7	200	-13998	-37128	1	-7	0	2	0,00	4,50	0,81	0,89	35158	
7	0	-16124	36601	1	-7	0	2	0,00	9,00	0,67	0,91	29648	
8	500	-8864	52522	1	-6.93	0	2	0,00	8,93	0,67	0,76	24904	
8	200	-14200	-33360	1	-6.93	0	2	0,00	4,46	0,81	0,91	35694	
8	0	-16307	41422	1	-6.93	0	2	0,00	8,93	0,67	0,90	29361	
9	500	-8892	53614	1	-6.91	0	2	0,00	8,91	0,67	0,76	24783	
9	200	-14225	-32044	1	-6.91	0	2	0,00	4,45	0,81	0,91	35864	
9	0	-16333	42670	1	-6.91	0	2	0,00	8,91	0,67	0,89	29285	
10	500	-8914	54169	1	-6.9	0	2	0,00	8,90	0,67	0,76	24725	
10	200	-14256	-31894	1	-6.9	0	2	0,00	4,45	0,81	0,91	35892	
10	0	-16359	43079	1	-6.9	0	2	0,00	8,90	0,67	0,89	29262	
11	500	-11022	51905	1	-7.08	0	2	0,00	9,08	0,67	0,81	26371	
11	200	-17850	-55517	1	-7.08	0	2	0,00	4,54	0,81	0,87	34369	
11	0	-20645	38770	1	-7.08	0	2	0,00	9,08	0,67	0,92	30081	
12	500	-11066	53014	1	-7.07	0	2	0,00	9,07	0,67	0,81	26271	
12	200	-17913	-55218	1	-7.07	0	2	0,00	4,54	0,81	0,88	34419	
12	0	-20696	39588	1	-7.07	0	2	0,00	9,07	0,67	0,92	30043	
13	500	-11233	58151	1	-7.02	0	2	0,00	9,02	0,67	0,79	25814	
13	200	-18116	-51449	1	-7.02	0	2	0,00	4,51	0,81	0,89	34847	
13	0	-20879	44409	1	-7.02	0	2	0,00	9,02	0,67	0,91	29818	
14	500	-11261	59243	1	-7	0	2	0,00	9,00	0,67	0,79	25717	
14	200	-18140	-50133	1	-7	0	2	0,00	4,50	0,81	0,89	34980	
14	0	-20905	45657	1	-7	0	2	0,00	9,00	0,67	0,91	29759	
15	500	-11283	59798	1	-7	0	2	0,00	9,00	0,67	0,79	25669	
15	200	-18172	-49984	1	-7	0	2	0,00	4,50	0,81	0,89	35004	
15	0	-20931	46067	1	-7	0	2	0,00	9,00	0,67	0,91	29740	
16	500	-11197	58254	1	-7.02	0	2	0,00	9,02	0,67	0,79	25773	
16	200	-18054	-50239	1	-7.02	0	2	0,00	4,51	0,81	0,89	34931	
16	0	-20837	44729	1	-7.02	0	2	0,00	9,02	0,67	0,91	29784	
17	500	-11241	59363	1	-7.02	0	2	0,00	9,02	0,67	0,79	25676	
17	200	-18117	-49940	1	-7.02	0	2	0,00	4,51	0,81	0,89	34978	
17	0	-20888	45548	1	-7.02	0	2	0,00	9,02	0,67	0,91	29747	
18	500	-11408	64500	1	-6.96	0	2	0,00	8,96	0,67	0,77	25233	
18	200	-18320	-46171	1	-6.96	0	2	0,00	4,48	0,81	0,90	35396	
18	0	-21071	50369	1	-6.96	0	2	0,00	8,96	0,67	0,90	29525	
19	500	-11436	65592	1	-6.95	0	2	0,00	8,95	0,67	0,77	25138	
19	200	-18344	-44855	1	-6.95	0	2	0,00	4,47	0,81	0,90	35527	
19	0	-21097	51617	1	-6.95	0	2	0,00	8,95	0,67	0,90	29466	
20	500	-11458	66147	1	-6.94	0	2	0,00	8,94	0,67	0,77	25092	
20	200	-18375	-44706	1	-6.94	0	2	0,00	4,47	0,81	0,90	35550	
20	0	-21123	52026	1	-6.94	0	2	0,00	8,94	0,67	0,90	29448	

Verifica a taglio con rottura per fessurazione diagonale per azioni non sismiche Circ.617 C8.7.1.5 gammaM 3

comb.	quota	Vd	N	ftd	b	sigma0	Vu	c.s.	
SLU 1	250	34	-13164	0.33	1.5	2	3872	100	
SLU 1	100	-33	-15742	0.33	1.5	2.39	4184	100	
SLU 2	250	35	-13226	0.33	1.5	2.01	3880	100	
SLU 2	100	-34	-15809	0.33	1.5	2.4	4192	100	
SLU 3	250	36	-13430	0.33	1.5	2.04	3905	100	
SLU 3	100	-35	-16033	0.33	1.5	2.43	4218	100	
SLU 4	250	36	-13455	0.33	1.5	2.04	3908	100	
SLU 4	100	-35	-16062	0.33	1.5	2.44	4221	100	
SLU 5	250	36	-13486	0.33	1.5	2.05	3912	100	
SLU 5	100	-36	-16095	0.33	1.5	2.44	4225	100	
SLU 6	250	36	-13368	0.33	1.5	2.03	3897	100	
SLU 6	100	-35	-15968	0.33	1.5	2.42	4210	100	
SLU 7	250	36	-13431	0.33	1.5	2.04	3905	100	
SLU 7	100	-36	-16035	0.33	1.5	2.43	4218	100	
SLU 8	250	37	-13635	0.33	1.5	2.07	3931	100	
SLU 8	100	-38	-16259	0.33	1.5	2.47	4244	100	
SLU 9	250	37	-13660	0.33	1.5	2.07	3934	100	
SLU 9	100	-37	-16288	0.33	1.5	2.47	4247	100	
SLU 10	250	37	-13691	0.33	1.5	2.08	3938	100	
SLU 10	100	-38	-16321	0.33	1.5	2.48	4251	100	
SLU 11	250	45	-17113	0.33	1.5	2.6	4341	96.8	
SLU 11	100	-43	-20465	0.33	1.5	3.11	4703	100	
SLU 12	250	45	-17175	0.33	1.5	2.61	4348	95.69	
SLU 12	100	-44	-20532	0.33	1.5	3.12	4710	100	
SLU 13	250	46	-17379	0.33	1.5	2.64	4371	94.4	
SLU 13	100	-45	-20756	0.33	1.5	3.15	4733	100	
SLU 14	250	46	-17404	0.33	1.5	2.64	4374	94.92	
SLU 14	100	-45	-20785	0.33	1.5	3.16	4736	100	
SLU 15	250	46	-17436	0.33	1.5	2.65	4377	94.39	
SLU 15	100	-46	-20818	0.33	1.5	3.16	4739	100	
SLU 16	250	46	-17317	0.33	1.5	2.63	4364	94.77	
SLU 16	100	-45	-20691	0.33	1.5	3.14	4726	100	
SLU 17	250	47	-17380	0.33	1.5	2.64	4371	93.72	
SLU 17	100	-46	-20758	0.33	1.5	3.15	4733	100	
SLU 18	250	48	-17584	0.33	1.5	2.67	4394	92.5	
SLU 18	100	-47	-20982	0.33	1.5	3.19	4756	100	
SLU 19	250	47	-17609	0.33	1.5	2.67	4396	92.99	
SLU 19	100	-47	-21011	0.33	1.5	3.19	4759	100	
SLU 20	250	48	-17640	0.33	1.5	2.68	4400	92.49	
SLU 20	100	-48	-21044	0.33	1.5	3.19	4762	99.98	

Verifica a pressoflessione fuori piano D.M. 14-01-08 (N.T.C.)
quota 200 Ta 0.04 Wa 0.19 denominatore 8

comb.	fd	Sa	x	N	M	Mc	c.s.	
SLV 1	11	0.3	16.17	-11836	28562	407340	14.26	
SLV 2	11	0.3	15.3	-11196	28562	390194	13.66	
SLV 3	11	0.3	15.83	-11584	28562	400651	14.03	
SLV 4	11	0.3	14.95	-10943	28562	383284	13.42	
SLV 5	11	0.3	19.05	-13942	28562	459746	16.1	
SLV 6	11	0.3	18.07	-13228	28562	442668	15.5	
SLV 7	11	0.3	17.9	-13100	28562	439531	15.39	
SLV 8	11	0.3	16.92	-12387	28562	421633	14.76	

muratura

comb.	fd	Sa	x	N	M	Mc	c.s.	
SLV 9	11	0.3	21.13	-15463	28562	493838	17.29	
SLV 10	11	0.3	20.15	-14749	28562	478243	16.74	
SLV 11	11	0.3	19.98	-14621	28562	475371	16.64	
SLV 12	11	0.3	19	-13908	28562	458956	16.07	
SLV 13	11	0.3	23.1	-16907	28562	523273	18.32	
SLV 14	11	0.3	22.22	-16266	28562	510564	17.88	
SLV 15	11	0.3	22.75	-16654	28562	518332	18.15	
SLV 16	11	0.3	21.88	-16014	28562	505402	17.69	

Verifica dei meccanismi locali di collasso con analisi cinematica lineare
accelerazione limite = 92,39; forza di aggancio al piano = 30

combinazione	N top	N base	V orto	alfa0	M*	e*	a0*	
SLV 1	-7839	-14947	1233	0.237	12.653	0.91	189	
SLV 2	-7555	-14600	1229	0.241	12.371	0.909	192	
SLV 3	-7702	-14737	1194	0.242	12.517	0.91	193	
SLV 4	-7418	-14390	1190	0.246	12.235	0.908	197	
SLV 5	-8725	-16187	1287	0.222	13.536	0.914	176	
SLV 6	-8409	-15800	1282	0.226	13.221	0.913	180	
SLV 7	-8268	-15486	1157	0.238	13.08	0.912	190	
SLV 8	-7952	-15099	1152	0.243	12.766	0.911	194	
SLV 9	-9333	-17022	1294	0.216	14.144	0.917	171	
SLV 10	-9018	-16636	1289	0.219	13.829	0.916	174	
SLV 11	-8876	-16321	1164	0.231	13.688	0.915	183	
SLV 12	-8561	-15935	1159	0.235	13.373	0.914	187	
SLV 13	-9867	-17732	1256	0.214	14.679	0.919	169	
SLV 14	-9584	-17385	1252	0.217	14.395	0.918	172	
SLV 15	-9730	-17521	1217	0.218	14.542	0.919	173	
SLV 16	-9447	-17174	1213	0.221	14.258	0.918	175	

Maschio 22
Maschio considerato membratura sismica secondaria
Dati geometrici

X ini.	Y ini.	X fin.	Y fin.	quota i.	quota.s	l	sp.	h netta	h ini.	h fin.	a
1847.5	610	1770	610	L1	L2	77.5	45	400	500	500	

Materiale: Muratura in pietrame consolidata con iniezioni LC1
f medio 30
tau 0.9
E 24000
G 8053.69
Fattore di confidenza 1.35

Rinforzo con rete e betoncino su entrambe le facce
Betoncino: C25/30
spessore: 3
acciaio materiale: B450C
BARRE VERTICALI
diametro (mm) 5
passo 20
ancorate ad entrambe le estremità
BARRE ORIZZONTALI
diametro (mm) 5
passo 20
ancorate ad entrambe le estremità

Verifica a pressoflessione nel piano e taglio delle sezioni rinforzate 7.8.3.2 D.M. 14-01-08 (N.T.C.)

comb.	quota sezione	gamma m.	gamma s.	gamma c.	N	V	V orto	M	M orto	c.s.	d	fvd	Vt,c	Vt,M	Vt,S	
SLU 1	0	3	1.15	1.5	-13549	0	-18	33732	706	5	77.5	0.41	7750	1433	3573	
SLU 1	500	3	1.15	1.5	-8644	31	5	-8998	93	7.83	77.5	0.34	7750	1195	3573	
SLU 2	0	3	1.15	1.5	-13806	0	-18	34679	722	4.9	77.5	0.41	7750	1445	3573	
SLU 2	500	3	1.15	1.5	-8886	33	5	-9371	94	7.62	77.5	0.35	7750	1206	3573	
SLU 3	0	3	1.15	1.5	-14522	0	-19	35863	775	4.66	77.5	0.42	7750	1480	3573	
SLU 3	500	3	1.15	1.5	-9512	33	6	-9806	103	7.12	77.5	0.35	7750	1237	3573	
SLU 4	0	3	1.15	1.5	-14571	0	-20	35423	781	4.65	77.5	0.43	7750	1482	3573	
SLU 4	500	3	1.15	1.5	-9539	32	6	-9621	105	7.1	77.5	0.35	7750	1238	3573	
SLU 5	0	3	1.15	1.5	-14700	0	-20	35897	789	4.61	77.5	0.43	7750	1488	3573	
SLU 5	500	3	1.15	1.5	-9660	33	6	-9807	106	7.01	77.5	0.36	7750	1244	3573	
SLU 6	0	3	1.15	1.5	-14364	0	-19	35317	765	4.71	77.5	0.42	7750	1472	3573	
SLU 6	500	3	1.15	1.5	-9363	33	6	-9589	102	7.23	77.5	0.35	7750	1229	3573	
SLU 7	0	3	1.15	1.5	-14621	0	-19	36264	781	4.63	77.5	0.43	7750	1485	3573	
SLU 7	500	3	1.15	1.5	-9604	34	6	-9961	104	7.05	77.5	0.36	7750	1241	3573	
SLU 8	0	3	1.15	1.5	-15337	0	-21	37448	834	4.42	77.5	0.44	7750	1519	3573	
SLU 8	500	3	1.15	1.5	-10231	35	6	-10396	113	6.62	77.5	0.36	7750	1272	3573	
SLU 9	0	3	1.15	1.5	-15386	0	-21	37008	840	4.4	77.5	0.44	7750	1522	3573	
SLU 9	500	3	1.15	1.5	-10258	34	6	-10211	115	6.6	77.5	0.36	7750	1273	3573	
SLU 10	0	3	1.15	1.5	-15515	0	-21	37482	848	4.36	77.5	0.44	7750	1528	3573	
SLU 10	500	3	1.15	1.5	-10378	34	7	-10397	116	6.52	77.5	0.37	7750	1279	3573	
SLU 11	0	3	1.15	1.5	-17614	0	-23	43852	917	3.84	77.5	0.47	7750	1630	3573	
SLU 11	500	3	1.15	1.5	-11237	41	7	-11698	120	6.03	77.5	0.38	7750	1320	3573	
SLU 12	0	3	1.15	1.5	-17871	0	-23	44799	934	3.79	77.5	0.47	7750	1642	3573	
SLU 12	500	3	1.15	1.5	-11479	42	7	-12070	122	5.9	77.5	0.38	7750	1332	3573	
SLU 13	0	3	1.15	1.5	-18587	0	-25	45983	986	3.64	77.5	0.48	7750	1677	3573	
SLU 13	500	3	1.15	1.5	-12105	43	8	-12506	131	5.59	77.5	0.39	7750	1363	3573	
SLU 14	0	3	1.15	1.5	-18636	0	-25	45543	993	3.63	77.5	0.48	7750	1680	3573	
SLU 14	500	3	1.15	1.5	-12132	42	8	-12320	133	5.58	77.5	0.39	7750	1364	3573	
SLU 15	0	3	1.15	1.5	-18765	0	-25	46016	1001	3.61	77.5	0.48	7750	1686	3573	
SLU 15	500	3	1.15	1.5	-12253	43	8	-12506	134	5.53	77.5	0.39	7750	1370	3573	
SLU 16	0	3	1.15	1.5	-18429	0	-24	45437	977	3.67	77.5	0.48	7750	1669	3573	
SLU 16	500	3	1.15	1.5	-11956	42	7	-12288	130	5.66	77.5	0.39	7750	1355	3573	
SLU 17	0	3	1.15	1.5	-18686	0	-25	46384	993	3.62	77.5	0.48	7750	1682	3573	

comb.	quota sezione	gamma m.	gamma s.	gamma c.	N	V	V orto	M	M orto	c.s.	d	fvd	Vt,c	Vt,M	Vt,S	
SLU 17	500	3	1.15	1.5	-12198	43	8	-12660	132	5.55	77.5	0.39	7750	1367	3573	
SLU 18	0	3	1.15	1.5	-19401	0	-26	47568	1046	3.49	77.5	0.49	7750	1717	3573	
SLU 18	500	3	1.15	1.5	-12824	44	8	-13096	140	5.28	77.5	0.4	7750	1397	3573	
SLU 19	0	3	1.15	1.5	-19451	0	-26	47128	1052	3.48	77.5	0.49	7750	1719	3573	
SLU 19	500	3	1.15	1.5	-12851	43	8	-12910	143	5.27	77.5	0.4	7750	1399	3573	
SLU 20	0	3	1.15	1.5	-19579	0	-26	47601	1060	3.46	77.5	0.49	7750	1725	3573	
SLU 20	500	3	1.15	1.5	-12972	44	8	-13096	143	5.22	77.5	0.4	7750	1405	3573	

Verifica a pressoflessione fuori piano muratura rinforzata D.M. 14-01-08 (N.T.C.)
quota 200 Ta 0.08 Wa 0.1 denominatore 8

comb.	fd	fcd	fyd	N	Sa	M	x	c.s.	
SLV 1	11	141	3913	-10382	0.35	17721	78	8.33	
SLV 2	11	141	3913	-10447	0.35	17721	78	8.28	
SLV 3	11	141	3913	-9838	0.35	17721	78	8.79	
SLV 4	11	141	3913	-9904	0.35	17721	78	8.74	
SLV 5	11	141	3913	-12759	0.35	17721	78	6.78	
SLV 6	11	141	3913	-12833	0.35	17721	78	6.74	
SLV 7	11	141	3913	-10947	0.35	17721	78	7.9	
SLV 8	11	141	3913	-11020	0.35	17721	78	7.85	
SLV 9	11	141	3913	-14257	0.35	17721	78	6.07	
SLV 10	11	141	3913	-14330	0.35	17721	78	6.04	
SLV 11	11	141	3913	-12445	0.35	17721	78	6.95	
SLV 12	11	141	3913	-12518	0.35	17721	78	6.91	
SLV 13	11	141	3913	-15373	0.35	17721	78	5.63	
SLV 14	11	141	3913	-15439	0.35	17721	78	5.6	
SLV 15	11	141	3913	-14830	0.35	17721	78	5.83	
SLV 16	11	141	3913	-14896	0.35	17721	78	5.81	

Per la verifica seguente non si considerano i rinforzi predisposti.

Verifica dei meccanismi locali di collasso con analisi cinematica lineare
accelerazione limite = 92,39; forza di aggancio al piano = 30

combinazione	N top	N base	V orto	alfa0	M*	e*	a0*	
SLV 1	-7100	-12098	8	0.335	9.66	0.932	261	
SLV 2	-7198	-12126	9	0.331	9.759	0.932	258	
SLV 3	-6503	-11576	27	0.353	9.057	0.928	276	
SLV 4	-6601	-11603	27	0.349	9.156	0.929	273	
SLV 5	-9508	-14419	-23	0.273	12.097	0.944	210	
SLV 6	-9617	-14449	-22	0.271	12.208	0.944	208	
SLV 7	-7516	-12676	41	0.318	10.08	0.934	248	
SLV 8	-7625	-12707	41	0.315	10.191	0.935	245	
SLV 9	-10979	-15887	-30	0.247	13.59	0.949	189	
SLV 10	-11088	-15917	-29	0.245	13.7	0.949	188	
SLV 11	-8987	-14144	33	0.282	11.569	0.941	218	
SLV 12	-9096	-14174	34	0.28	11.679	0.942	216	
SLV 13	-12004	-16991	-16	0.233	14.63	0.952	178	
SLV 14	-12102	-17018	-15	0.232	14.729	0.952	177	
SLV 15	-11406	-16468	3	0.242	14.023	0.95	185	
SLV 16	-11504	-16495	4	0.241	14.122	0.951	184	

Maschio 23
Dati geometrici

X ini.	Y ini.	X fin.	Y fin.	quota i.	quota.s	l	sp.	h netta	h ini.	h fin.	a
1650	1070	1300	1070	L1	L2	350	45	400	500	500	

Materiale: Muratura in pietrame consolidata con iniezioni LC1
f medio 30
tau 0.9
E 24000
G 8053.69
Fattore di confidenza 1.35

Verifica a pressoflessione per azioni non sismiche 4.5.6.2 D.M. 14-01-08 (N.T.C.) gammaM 3

comb.	quota	N	M	p	es1	es2	ea	ev	e ver (cm)	Ft	Fl	Nu (daN)	
1	500	-34494	-239756	1	0	0	2	0,00	2,00	0,75	0,94	82070	
1	200	-47774	-216542	1	0	0	2	0,00	2,00	0,75	0,96	83956	
1	0	-51876	-361637	1	0	0	2	0,00	2,00	0,75	0,94	82054	
2	500	-35518	-238063	1	0	0	2	0,00	2,00	0,75	0,94	82264	
2	200	-48853	-221088	1	0	0	2	0,00	2,00	0,75	0,96	83962	
2	0	-52850	-368243	1	0	0	2	0,00	2,00	0,75	0,94	82057	
3	500	-37981	-236871	1	0	0	2	0,00	2,00	0,75	0,94	82627	
3	200	-52088	-196833	1	0	0	2	0,00	2,00	0,75	0,97	84544	
3	0	-56048	-381992	1	0	0	2	0,00	2,00	0,75	0,94	82176	
4	500	-38013	-238053	1	0	0	2	0,00	2,00	0,75	0,94	82607	
4	200	-52395	-181893	1	0	0	2	0,00	2,00	0,75	0,97	84784	
4	0	-56444	-381279	1	0	0	2	0,00	2,00	0,75	0,94	82223	
5	500	-38525	-237207	1	0	0	2	0,00	2,00	0,75	0,95	82689	
5	200	-52935	-184166	1	0	0	2	0,00	2,00	0,75	0,97	84778	
5	0	-56931	-384582	1	0	0	2	0,00	2,00	0,75	0,94	82223	
6	500	-37387	-257251	1	0	0	2	0,00	2,00	0,75	0,94	82125	
6	200	-51321	-197867	1	0	0	2	0,00	2,00	0,75	0,97	84484	
6	0	-55202	-351033	1	0	0	2	0,00	2,00	0,75	0,94	82532	
7	500	-38411	-255558	1	0	0	2	0,00	2,00	0,75	0,94	82302	
7	200	-52401	-202413	1	0	0	2	0,00	2,00	0,75	0,97	84479	
7	0	-56177	-357638	1	0	0	2	0,00	2,00	0,75	0,94	82526	
8	500	-40874	-254366	1	0	0	2	0,00	2,00	0,75	0,94	82638	
8	200	-55636	-178158	1	0	0	2	0,00	2,00	0,75	0,97	84994	
8	0	-59375	-371388	1	0	0	2	0,00	2,00	0,75	0,94	82613	
9	500	-40906	-255548	1	0	0	2	0,00	2,00	0,75	0,94	82619	
9	200	-55943	-163218	1	0	0	2	0,00	2,00	0,75	0,97	85216	
9	0	-59771	-370675	1	0	0	2	0,00	2,00	0,75	0,94	82655	
10	500	-41418	-254702	1	0	0	2	0,00	2,00	0,75	0,95	82695	

muratura

comb.	quota	N	M	p	es1	es2	ea	ev	e ver (cm)	Ft	Fl	Nu (daN)	
10	200	-56483	-165491	1	0	0	2	0,00	2,00	0,75	0,97	85206	
10	0	-60258	-373978	1	0	0	2	0,00	2,00	0,75	0,94	82651	
11	500	-44842	-311683	1	0	0	2	0,00	2,00	0,75	0,94	82070	
11	200	-62106	-281505	1	0	0	2	0,00	2,00	0,75	0,96	83956	
11	0	-67438	-470128	1	0	0	2	0,00	2,00	0,75	0,94	82054	
12	500	-45866	-309990	1	0	0	2	0,00	2,00	0,75	0,94	82220	
12	200	-63185	-286050	1	0	0	2	0,00	2,00	0,75	0,96	83961	
12	0	-68413	-476734	1	0	0	2	0,00	2,00	0,75	0,94	82056	
13	500	-48329	-308798	1	0	0	2	0,00	2,00	0,75	0,94	82508	
13	200	-66421	-261796	1	0	0	2	0,00	2,00	0,75	0,96	84417	
13	0	-71611	-490483	1	0	0	2	0,00	2,00	0,75	0,94	82149	
14	500	-48361	-309980	1	0	0	2	0,00	2,00	0,75	0,94	82492	
14	200	-66728	-246856	1	0	0	2	0,00	2,00	0,75	0,97	84606	
14	0	-72007	-489770	1	0	0	2	0,00	2,00	0,75	0,94	82187	
15	500	-48873	-309134	1	0	0	2	0,00	2,00	0,75	0,94	82558	
15	200	-67267	-249128	1	0	0	2	0,00	2,00	0,75	0,97	84603	
15	0	-72494	-493073	1	0	0	2	0,00	2,00	0,75	0,94	82187	
16	500	-47735	-329178	1	0	0	2	0,00	2,00	0,75	0,94	82113	
16	200	-65653	-262830	1	0	0	2	0,00	2,00	0,75	0,96	84369	
16	0	-70765	-459524	1	0	0	2	0,00	2,00	0,75	0,94	82427	
17	500	-48759	-327485	1	0	0	2	0,00	2,00	0,75	0,94	82253	
17	200	-66733	-267375	1	0	0	2	0,00	2,00	0,75	0,96	84366	
17	0	-71739	-466129	1	0	0	2	0,00	2,00	0,75	0,94	82424	
18	500	-51222	-326293	1	0	0	2	0,00	2,00	0,75	0,94	82523	
18	200	-69968	-243121	1	0	0	2	0,00	2,00	0,75	0,97	84781	
18	0	-74937	-479879	1	0	0	2	0,00	2,00	0,75	0,94	82497	
19	500	-51254	-327475	1	0	0	2	0,00	2,00	0,75	0,94	82508	
19	200	-70275	-228181	1	0	0	2	0,00	2,00	0,75	0,97	84959	
19	0	-75333	-479166	1	0	0	2	0,00	2,00	0,75	0,94	82531	
20	500	-51766	-326629	1	0	0	2	0,00	2,00	0,75	0,94	82570	
20	200	-70815	-230453	1	0	0	2	0,00	2,00	0,75	0,97	84953	
20	0	-75821	-482469	1	0	0	2	0,00	2,00	0,75	0,94	82528	

Verifica a taglio con rottura per fessurazione diagonale per azioni non sismiche Circ.617 C8.7.1.5 gammaM 3

comb.	quota	Vd	N	ftd	b	sigma0	Vu	c.s.	
SLU 1	250	2647	-45242	0.33	1.14	2.87	14246	5.38	
SLU 1	0	1497	-51876	0.33	1.14	3.29	15153	10.12	
SLU 2	250	2716	-46323	0.33	1.14	2.94	14398	5.3	
SLU 2	0	1543	-52850	0.33	1.14	3.36	15282	9.91	
SLU 3	250	2609	-49491	0.33	1.14	3.14	14833	5.69	
SLU 3	0	1361	-56048	0.33	1.14	3.56	15697	11.53	
SLU 4	250	2495	-49766	0.33	1.14	3.16	14871	5.96	
SLU 4	0	1238	-56444	0.33	1.14	3.58	15747	12.72	
SLU 5	250	2529	-50307	0.33	1.14	3.19	14944	5.91	
SLU 5	0	1261	-56931	0.33	1.14	3.61	15809	12.54	
SLU 6	250	2787	-48753	0.33	1.14	3.1	14733	5.29	
SLU 6	0	1553	-55202	0.33	1.14	3.5	15588	10.03	
SLU 7	250	2855	-49835	0.33	1.14	3.16	14880	5.21	
SLU 7	0	1599	-56177	0.33	1.14	3.57	15713	9.83	
SLU 8	250	2749	-53002	0.33	1.14	3.37	15302	5.57	
SLU 8	0	1418	-59375	0.33	1.14	3.77	16117	11.37	
SLU 9	250	2634	-53278	0.33	1.14	3.38	15338	5.82	
SLU 9	0	1294	-59771	0.33	1.14	3.79	16166	12.49	
SLU 10	250	2668	-53819	0.33	1.14	3.42	15409	5.77	
SLU 10	0	1317	-60258	0.33	1.14	3.83	16227	12.32	
SLU 11	250	3441	-58814	0.33	1.14	3.73	16047	4.66	
SLU 11	0	1946	-67438	0.33	1.14	4.28	17093	8.79	
SLU 12	250	3510	-59896	0.33	1.14	3.8	16182	4.61	
SLU 12	0	1992	-68413	0.33	1.14	4.34	17207	8.64	
SLU 13	250	3403	-63063	0.33	1.14	4	16571	4.87	
SLU 13	0	1810	-71611	0.33	1.14	4.55	17577	9.71	
SLU 14	250	3289	-63338	0.33	1.14	4.02	16604	5.05	
SLU 14	0	1687	-72007	0.33	1.14	4.57	17622	10.45	
SLU 15	250	3323	-63879	0.33	1.14	4.06	16669	5.02	
SLU 15	0	1710	-72494	0.33	1.14	4.6	17678	10.34	
SLU 16	250	3581	-62326	0.33	1.14	3.96	16481	4.6	
SLU 16	0	2002	-70765	0.33	1.14	4.49	17480	8.73	
SLU 17	250	3650	-63408	0.33	1.14	4.03	16612	4.55	
SLU 17	0	2048	-71739	0.33	1.14	4.55	17592	8.59	
SLU 18	250	3543	-66575	0.33	1.14	4.23	16991	4.8	
SLU 18	0	1867	-74937	0.33	1.14	4.76	17953	9.62	
SLU 19	250	3428	-66850	0.33	1.14	4.24	17024	4.97	
SLU 19	0	1743	-75333	0.33	1.14	4.78	17997	10.32	
SLU 20	250	3462	-67391	0.33	1.14	4.28	17088	4.94	
SLU 20	0	1766	-75821	0.33	1.14	4.81	18052	10.22	

Verifica a pressoflessione nel piano (7.8.2.2) e taglio con rottura per fessurazione diagonale (C8.7.1.5), gammaM = 2

comb.	quota	N	V par	V orto	M	M orto	N/(l*sp)	N/(l'*sp)	Mu	l'	fvd	Vt scorr.	Vt fess.diag.	
SLV 1	0	-41261	14863	267	1451480	-33316	2.62	2.62	5217772	350	0.86	13502	17212	
SLV 1	500	-41285	6871	-166	-685648	-11369	2.62	2.62	5219658	350	0.86	13507	17216	
SLV 2	0	-41426	13981	270	1314994	-33513	2.63	2.63	5230623	350	0.86	13535	17241	
SLV 2	500	-40349	6209	-165	-626370	-11336	2.56	2.56	5145702	350	0.85	13320	17052	
SLV 3	0	-43882	14875	-277	1512031	17176	2.79	2.79	5413926	350	0.89	14026	17665	
SLV 3	500	-42418	6589	532	-846524	22563	2.69	2.69	5306345	350	0.87	13734	17414	
SLV 4	0	-44048	13993	-274	1375545	16978	2.8	2.8	5425757	350	0.89	14060	17693	
SLV 4	500	-41481	5927	534	-787246	22595	2.63	2.63	5234885	350	0.86	13546	17251	
SLV 5	0	-46840	5838	884	148185	-85780	2.97	2.97	5615862	350	0.93	14618	18163	
SLV 5	500	-37037	1407	-1109	-161569	-54982	2.35	2.35	4867679	350	0.8	12657	16456	
SLV 6	0	-47024	4856	888	-3810	-86000	2.99	2.99	5627752	350	0.93	14655	18194	
SLV 6	500	-35994	670	-1108	-95555	-54945	2.29	2.29	4774762	350	0.79	12449	16263	
SLV 7	0	-55578	5876	-930	350023	82523	3.53	3.53	6092130	350	1.04	16366	19560	
SLV 7	500	-40813	466	1218	-697824	58124	2.59	2.59	5182637	350	0.85	13413	17133	
SLV 8	0	-55762	4894	-927	198028	82303	3.54	3.54	6100234	350	1.04	16402	19588	
SLV 8	500	-39770	-271	1220	-631810	58160	2.53	2.53	5098987	350	0.84	13204	16949	
SLV 9	0	-54252	-1929	869	-915020	-80268	3.44	3.44	6031414	350	1.02	16100	19354	
SLV 9	500	-34483	-3591	-1219	129652	-58431	2.19	2.19	4635623	350	0.77	12147	15981	
SLV 10	0	-54436	-2911	872	-1067015	-80488	3.46	3.46	6040092	350	1.02	16137	19383	
SLV 10	500	-33440	-4328	-1218	195666	-58394	2.12	2.12	4536437	350	0.76	11938	15783	

comb.	quota	N	V par	V orto	M	M orto	N/(l*sp)	N/(l'*sp)	Mu	l'	fvd	Vt scorr.	Vt fess.diag.	
SLV 11	0	-62989	-1891	-946	-713182	88035	4	4	6355307	350	1.13	17848	20670	
SLV 11	500	-38259	-4532	1108	-406603	54675	2.43	2.43	4973272	350	0.82	12902	16678	
SLV 12	0	-63174	-2873	-942	-865177	87815	4.01	4.01	6360200	350	1.14	17885	20697	
SLV 12	500	-37216	-5269	1109	-340589	54711	2.36	2.36	4883354	350	0.81	12693	16488	
SLV 13	0	-65966	-11027	216	-2092537	-14943	4.19	4.19	6424628	350	1.17	18443	21100	
SLV 13	500	-32772	-9789	-534	285089	-22866	2.08	2.08	4471545	350	0.75	11804	15655	
SLV 14	0	-66132	-11909	219	-2229023	-15140	4.2	4.2	6427868	350	1.17	18476	21124	
SLV 14	500	-31835	-10451	-532	344366	-22833	2.02	2.02	4378826	350	0.74	11617	15473	
SLV 15	0	-68588	-11016	-328	-2031986	35548	4.35	4.35	6468407	350	1.2	18968	21471	
SLV 15	500	-33905	-10072	165	124212	11066	2.15	2.15	4580923	350	0.76	12031	15871	
SLV 16	0	-68753	-11898	-325	-2168472	35351	4.37	4.37	6470627	350	1.21	19001	21494	
SLV 16	500	-32968	-10734	166	183490	11098	2.09	2.09	4490701	350	0.75	11844	15692	

Verifica a pressoflessione fuori piano D.M. 14-01-08 (N.T.C.)
quota 200 Ta 0 Wa 0.1 denominatore 8

comb.	fd	Sa	x	N	M	Mc	c.s.	
SLV 1	11	0.24	14.08	-46533	56437	719462	12.75	
SLV 2	11	0.24	13.93	-46031	56437	715203	12.67	
SLV 3	11	0.24	14.8	-48906	56437	738600	13.09	
SLV 4	11	0.24	14.64	-48405	56437	734700	13.02	
SLV 5	11	0.24	14.01	-46308	56437	717566	12.71	
SLV 6	11	0.24	13.84	-45750	56437	712780	12.63	
SLV 7	11	0.24	16.4	-54219	56437	775269	13.74	
SLV 8	11	0.24	16.23	-53661	56437	771818	13.68	
SLV 9	11	0.24	14.66	-48465	56437	735174	13.03	
SLV 10	11	0.24	14.49	-47907	56437	730752	12.95	
SLV 11	11	0.24	17.05	-56376	56437	787715	13.96	
SLV 12	11	0.24	16.89	-55818	56437	784629	13.9	
SLV 13	11	0.24	16.25	-53722	56437	772196	13.68	
SLV 14	11	0.24	16.1	-53220	56437	769026	13.63	
SLV 15	11	0.24	16.97	-56095	56437	786172	13.93	
SLV 16	11	0.24	16.82	-55594	56437	783363	13.88	

Verifica dei meccanismi locali di collasso con analisi cinematica lineare
accelerazione limite = 92,39; forza di aggancio al piano = 30

combinazione	N top	N base	V orto	alfa0	M*	e*	a0*	
SLV 1	-41285	-41261	-166	0.279	52.955	0.942	215	
SLV 2	-40349	-41426	-165	0.283	52.006	0.941	219	
SLV 3	-42418	-43882	532	0.266	54.103	0.943	205	
SLV 4	-41481	-44048	534	0.27	53.153	0.942	208	
SLV 5	-37037	-46840	-1109	0.279	48.653	0.938	216	
SLV 6	-35994	-47024	-1108	0.284	47.598	0.937	220	
SLV 7	-40813	-55578	1218	0.259	52.476	0.942	200	
SLV 8	-39770	-55762	1220	0.263	51.42	0.941	203	
SLV 9	-34483	-54252	-1219	0.29	46.07	0.935	225	
SLV 10	-33440	-54436	-1218	0.296	45.016	0.934	230	
SLV 11	-38259	-62989	1108	0.273	49.89	0.939	211	
SLV 12	-37216	-63174	1109	0.278	48.834	0.938	215	
SLV 13	-32772	-65966	-534	0.317	44.341	0.933	247	
SLV 14	-31835	-66132	-532	0.323	43.395	0.932	252	
SLV 15	-33905	-68588	165	0.319	45.485	0.934	248	
SLV 16	-32968	-68753	166	0.325	44.539	0.933	253	

Maschio 24
Maschio considerato membratura sismica secondaria
Dati geometrici

X ini.	Y ini.	X fin.	Y fin.	quota i.	quota.s	l	sp.	h netta	h ini.	h fin.	a
1847.5	1070	1770	1070	L1	L2	77.5	45	400	500	500	

Materiale: Muratura in pietrame consolidata con iniezioni LC1
f medio 30
tau 0.9
E 24000
G 8053.69
Fattore di confidenza 1.35

Rinforzo con rete e betoncino su entrambe le facce
Betoncino: C25/30
spessore: 3
acciaio materiale: B450C
BARRE VERTICALI
diametro (mm) 5
passo 20
ancorate ad entrambe le estremità
BARRE ORIZZONTALI
diametro (mm) 5
passo 20
ancorate ad entrambe le estremità

Verifica a pressoflessione nel piano e taglio delle sezioni rinforzate 7.8.3.2 D.M. 14-01-08 (N.T.C.)

comb.	quota sezione	gamma m.	gamma s.	gamma c.	N	V	V orto	M	M orto	c.s.	d	fvd	Vt,c	Vt,M	Vt,S	
SLU 1	0	3	1.15	1.5	-12765	-1	12	47883	-399	5.3	77.5	0.4	7750	1395	3573	
SLU 1	500	3	1.15	1.5	-8325	33	-7	-10750	-173	8.13	77.5	0.34	7750	1179	3573	
SLU 2	0	3	1.15	1.5	-13002	-1	12	49127	-409	5.21	77.5	0.4	7750	1406	3573	
SLU 2	500	3	1.15	1.5	-8556	35	-8	-11138	-179	7.91	77.5	0.34	7750	1190	3573	
SLU 3	0	3	1.15	1.5	-13688	-1	13	51578	-440	4.95	77.5	0.41	7750	1439	3573	
SLU 3	500	3	1.15	1.5	-9193	36	-8	-11944	-196	7.37	77.5	0.35	7750	1221	3573	
SLU 4	0	3	1.15	1.5	-13745	-1	13	51384	-443	4.93	77.5	0.41	7750	1442	3573	
SLU 4	500	3	1.15	1.5	-9235	35	-8	-11901	-198	7.33	77.5	0.35	7750	1223	3573	
SLU 5	0	3	1.15	1.5	-13864	-1	13	52006	-448	4.88	77.5	0.42	7750	1448	3573	

muratura

comb.	quota sezione	gamma m.	gamma s.	gamma c.	N	V	V orto	M	M orto	c.s.	d	fvd	Vt,c	Vt,M	Vt,S	
SLU 5	500	3	1.15	1.5	-9351	36	-8	-12095	-201	7.24	77.5	0.35	7750	1229	3573	
SLU 6	0	3	1.15	1.5	-13536	-1	13	50759	-436	5	77.5	0.41	7750	1432	3573	
SLU 6	500	3	1.15	1.5	-9042	35	-8	-11656	-192	7.49	77.5	0.35	7750	1214	3573	
SLU 7	0	3	1.15	1.5	-13773	-1	13	52003	-445	4.92	77.5	0.41	7750	1444	3573	
SLU 7	500	3	1.15	1.5	-9273	36	-8	-12045	-197	7.3	77.5	0.35	7750	1225	3573	
SLU 8	0	3	1.15	1.5	-14459	-1	14	54454	-476	4.68	77.5	0.42	7750	1477	3573	
SLU 8	500	3	1.15	1.5	-9910	38	-9	-12851	-215	6.83	77.5	0.36	7750	1256	3573	
SLU 9	0	3	1.15	1.5	-14516	-1	14	54261	-480	4.66	77.5	0.42	7750	1480	3573	
SLU 9	500	3	1.15	1.5	-9952	37	-9	-12808	-217	6.8	77.5	0.36	7750	1258	3573	
SLU 10	0	3	1.15	1.5	-14635	-1	14	54883	-484	4.63	77.5	0.43	7750	1485	3573	
SLU 10	500	3	1.15	1.5	-10067	38	-9	-13002	-219	6.73	77.5	0.36	7750	1264	3573	
SLU 11	0	3	1.15	1.5	-16594	-1	15	62248	-519	4.08	77.5	0.45	7750	1580	3573	
SLU 11	500	3	1.15	1.5	-10822	43	-10	-13975	-225	6.26	77.5	0.37	7750	1300	3573	
SLU 12	0	3	1.15	1.5	-16831	-1	15	63492	-529	4.02	77.5	0.46	7750	1592	3573	
SLU 12	500	3	1.15	1.5	-11053	44	-10	-14363	-231	6.13	77.5	0.38	7750	1311	3573	
SLU 13	0	3	1.15	1.5	-17518	-1	16	65943	-559	3.87	77.5	0.47	7750	1625	3573	
SLU 13	500	3	1.15	1.5	-11691	46	-10	-15169	-248	5.79	77.5	0.38	7750	1342	3573	
SLU 14	0	3	1.15	1.5	-17574	-1	16	65749	-563	3.85	77.5	0.47	7750	1628	3573	
SLU 14	500	3	1.15	1.5	-11732	45	-11	-15126	-250	5.77	77.5	0.39	7750	1344	3573	
SLU 15	0	3	1.15	1.5	-17693	-1	16	66371	-568	3.83	77.5	0.47	7750	1634	3573	
SLU 15	500	3	1.15	1.5	-11848	46	-11	-15320	-253	5.72	77.5	0.39	7750	1350	3573	
SLU 16	0	3	1.15	1.5	-17365	-1	16	65124	-556	3.9	77.5	0.46	7750	1618	3573	
SLU 16	500	3	1.15	1.5	-11539	45	-10	-14881	-244	5.87	77.5	0.38	7750	1335	3573	
SLU 17	0	3	1.15	1.5	-17603	-1	16	66368	-565	3.85	77.5	0.47	7750	1629	3573	
SLU 17	500	3	1.15	1.5	-11770	46	-11	-15270	-249	5.75	77.5	0.39	7750	1346	3573	
SLU 18	0	3	1.15	1.5	-18289	-1	17	68819	-596	3.7	77.5	0.48	7750	1663	3573	
SLU 18	500	3	1.15	1.5	-12407	48	-11	-16076	-267	5.46	77.5	0.39	7750	1377	3573	
SLU 19	0	3	1.15	1.5	-18346	-1	17	68625	-600	3.69	77.5	0.48	7750	1665	3573	
SLU 19	500	3	1.15	1.5	-12449	47	-11	-16033	-269	5.44	77.5	0.4	7750	1379	3573	
SLU 20	0	3	1.15	1.5	-18464	-1	17	69248	-604	3.67	77.5	0.48	7750	1671	3573	
SLU 20	500	3	1.15	1.5	-12565	48	-11	-16227	-271	5.39	77.5	0.4	7750	1385	3573	

Verifica a pressoflessione fuori piano muratura rinforzata D.M. 14-01-08 (N.T.C.)
quota 200 Ta 0.08 Wa 0.1 denominatore 8

comb.	fd	fcd	fyd	N	Sa	M	x	c.s.	
SLV 1	11	141	3913	-9775	0.35	17721	78	8.85	
SLV 2	11	141	3913	-9839	0.35	17721	78	8.79	
SLV 3	11	141	3913	-10291	0.35	17721	78	8.41	
SLV 4	11	141	3913	-10355	0.35	17721	78	8.36	
SLV 5	11	141	3913	-10849	0.35	17721	78	7.98	
SLV 6	11	141	3913	-10920	0.35	17721	78	7.92	
SLV 7	11	141	3913	-12569	0.35	17721	78	6.88	
SLV 8	11	141	3913	-12640	0.35	17721	78	6.85	
SLV 9	11	141	3913	-12289	0.35	17721	78	7.04	
SLV 10	11	141	3913	-12360	0.35	17721	78	7	
SLV 11	11	141	3913	-14008	0.35	17721	78	6.18	
SLV 12	11	141	3913	-14079	0.35	17721	78	6.15	
SLV 13	11	141	3913	-14574	0.35	17721	78	5.94	
SLV 14	11	141	3913	-14638	0.35	17721	78	5.91	
SLV 15	11	141	3913	-15090	0.35	17721	78	5.73	
SLV 16	11	141	3913	-15153	0.35	17721	78	5.71	

Per la verifica seguente non si considerano i rinforzi predisposti.

Verifica dei meccanismi locali di collasso con analisi cinematica lineare
accelerazione limite = 92,39; forza di aggancio al piano = 30

combinazione	N top	N base	V orto	alfa0	M*	e*	a0*	
SLV 1	-6434	-10992	-32	0.355	8.989	0.928	278	
SLV 2	-6446	-11072	-31	0.354	9	0.928	278	
SLV 3	-7019	-11364	-18	0.336	9.578	0.931	262	
SLV 4	-7030	-11444	-17	0.336	9.59	0.932	262	
SLV 5	-7328	-12134	-37	0.324	9.891	0.933	252	
SLV 6	-7341	-12223	-36	0.324	9.903	0.933	252	
SLV 7	-9277	-13373	10	0.278	11.863	0.943	215	
SLV 8	-9290	-13462	11	0.278	11.876	0.943	214	
SLV 9	-8680	-13488	-27	0.29	11.258	0.94	224	
SLV 10	-8692	-13577	-27	0.289	11.27	0.94	224	
SLV 11	-10628	-14727	20	0.253	13.233	0.948	194	
SLV 12	-10641	-14816	21	0.253	13.246	0.948	194	
SLV 13	-10939	-15506	1	0.249	13.548	0.949	191	
SLV 14	-10950	-15586	2	0.249	13.56	0.949	191	
SLV 15	-11524	-15878	15	0.24	14.142	0.951	183	
SLV 16	-11535	-15958	16	0.24	14.153	0.951	183	

Maschio 25
Maschio considerato membratura sismica secondaria
Dati geometrici

X ini.	Y ini.	X fin.	Y fin.	quota i.	quota.s	l	sp.	h netta	h ini.	h fin.	a
1847.5	1522.5	1770	1522.5	L1	L2	77.5	85	400	500	500	

Materiale: Muratura in pietrame consolidata con iniezioni LC1
f medio 30
tau 0.9
E 24000
G 8053.69
Fattore di confidenza 1.35

Verifica a pressoflessione per azioni non sismiche 4.5.6.2 D.M. 14-01-08 (N.T.C.) gammaM 3

comb.	quota	N	M	p	es1	es2	ea	ev	e ver (cm)	Ft	Fl	Nu (daN)	
1	500	-9037	-12275	1	-5.39	0	2	0,00	7,39	0,70	0,95	32519	

comb.	quota	N	M	p	es1	es2	ea	ev	e ver (cm)	Ft	Fl	Nu (daN)	
1	200	-14693	55196	1	-5.39	0	2	0,00	3,69	0,84	0,85	34634	
1	0	-18035	64826	1	-5.39	0	2	0,00	7,39	0,70	0,86	29422	
2	500	-9074	-13424	1	-5.37	0	2	0,00	7,37	0,71	0,94	32363	
2	200	-14741	54111	1	-5.37	0	2	0,00	3,69	0,84	0,85	34783	
2	0	-18077	63931	1	-5.37	0	2	0,00	7,37	0,71	0,86	29513	
3	500	-9188	-16590	1	-5.34	0	2	0,00	7,34	0,71	0,93	31941	
3	200	-14910	51537	1	-5.34	0	2	0,00	3,67	0,84	0,86	35158	
3	0	-18226	62157	1	-5.34	0	2	0,00	7,34	0,71	0,86	29715	
4	500	-9201	-16797	1	-5.34	0	2	0,00	7,34	0,71	0,93	31914	
4	200	-14935	51518	1	-5.34	0	2	0,00	3,67	0,84	0,86	35170	
4	0	-18247	62292	1	-5.34	0	2	0,00	7,34	0,71	0,86	29712	
5	500	-9219	-17372	1	-5.34	0	2	0,00	7,34	0,71	0,92	31838	
5	200	-14959	50976	1	-5.34	0	2	0,00	3,67	0,84	0,86	35243	
5	0	-18269	61844	1	-5.34	0	2	0,00	7,34	0,71	0,86	29757	
6	500	-9172	-16581	1	-5.34	0	2	0,00	7,34	0,71	0,93	31942	
6	200	-14878	51133	1	-5.34	0	2	0,00	3,67	0,84	0,86	35194	
6	0	-18198	61640	1	-5.34	0	2	0,00	7,34	0,71	0,86	29752	
7	500	-9209	-17731	1	-5.33	0	2	0,00	7,33	0,71	0,92	31790	
7	200	-14926	50049	1	-5.33	0	2	0,00	3,66	0,84	0,87	35340	
7	0	-18240	60744	1	-5.33	0	2	0,00	7,33	0,71	0,87	29841	
8	500	-9323	-20897	1	-5.3	0	2	0,00	7,30	0,71	0,91	31380	
8	200	-15095	47475	1	-5.3	0	2	0,00	3,65	0,84	0,87	35704	
8	0	-18389	58970	1	-5.3	0	2	0,00	7,30	0,71	0,87	30040	
9	500	-9335	-21104	1	-5.3	0	2	0,00	7,30	0,71	0,91	31354	
9	200	-15120	47456	1	-5.3	0	2	0,00	3,65	0,84	0,87	35716	
9	0	-18410	59105	1	-5.3	0	2	0,00	7,30	0,71	0,87	30036	
10	500	-9354	-21679	1	-5.29	0	2	0,00	7,29	0,71	0,91	31281	
10	200	-15144	46914	1	-5.29	0	2	0,00	3,65	0,84	0,88	35787	
10	0	-18432	58658	1	-5.29	0	2	0,00	7,29	0,71	0,87	30080	
11	500	-11749	-15957	1	-5.39	0	2	0,00	7,39	0,70	0,95	32519	
11	200	-19101	71754	1	-5.39	0	2	0,00	3,69	0,84	0,85	34634	
11	0	-23445	84274	1	-5.39	0	2	0,00	7,39	0,70	0,86	29422	
12	500	-11785	-17107	1	-5.38	0	2	0,00	7,38	0,71	0,94	32399	
12	200	-19149	70670	1	-5.38	0	2	0,00	3,69	0,84	0,85	34749	
12	0	-23488	83379	1	-5.38	0	2	0,00	7,38	0,71	0,86	29492	
13	500	-11900	-20272	1	-5.35	0	2	0,00	7,35	0,71	0,93	32072	
13	200	-19318	68096	1	-5.35	0	2	0,00	3,68	0,84	0,86	35038	
13	0	-23637	81604	1	-5.35	0	2	0,00	7,35	0,71	0,86	29648	
14	500	-11912	-20480	1	-5.35	0	2	0,00	7,35	0,71	0,93	32052	
14	200	-19343	68077	1	-5.35	0	2	0,00	3,68	0,84	0,86	35048	
14	0	-23658	81739	1	-5.35	0	2	0,00	7,35	0,71	0,86	29645	
15	500	-11930	-21054	1	-5.35	0	2	0,00	7,35	0,71	0,93	31993	
15	200	-19367	67535	1	-5.35	0	2	0,00	3,67	0,84	0,86	35104	
15	0	-23679	81292	1	-5.35	0	2	0,00	7,35	0,71	0,86	29680	
16	500	-11883	-20264	1	-5.35	0	2	0,00	7,35	0,71	0,93	32074	
16	200	-19286	67692	1	-5.35	0	2	0,00	3,68	0,84	0,86	35066	
16	0	-23608	81088	1	-5.35	0	2	0,00	7,35	0,71	0,86	29676	
17	500	-11920	-21413	1	-5.34	0	2	0,00	7,34	0,71	0,93	31956	
17	200	-19334	66607	1	-5.34	0	2	0,00	3,67	0,84	0,86	35179	
17	0	-23651	80192	1	-5.34	0	2	0,00	7,34	0,71	0,86	29745	
18	500	-12034	-24579	1	-5.32	0	2	0,00	7,32	0,71	0,92	31637	
18	200	-19503	64033	1	-5.32	0	2	0,00	3,66	0,84	0,87	35462	
18	0	-23800	78418	1	-5.32	0	2	0,00	7,32	0,71	0,87	29899	
19	500	-12046	-24786	1	-5.32	0	2	0,00	7,32	0,71	0,92	31617	
19	200	-19528	64014	1	-5.32	0	2	0,00	3,66	0,84	0,87	35471	
19	0	-23821	78553	1	-5.32	0	2	0,00	7,32	0,71	0,87	29896	
20	500	-12065	-25361	1	-5.31	0	2	0,00	7,31	0,71	0,92	31560	
20	200	-19552	63472	1	-5.31	0	2	0,00	3,66	0,84	0,87	35527	
20	0	-23842	78105	1	-5.31	0	2	0,00	7,31	0,71	0,87	29930	

Verifica a taglio con rottura per fessurazione diagonale per azioni non sismiche Circ.617 C8.7.1.5 gammaM 3

comb.	quota	Vd	N	ftd	b	sigma0	Vu	c.s.	
SLU 1	250	-30	-13759	0.33	1.5	2.09	3946	100	
SLU 1	0	0	-18035	0.33	1.5	2.74	4443	100	
SLU 2	250	-31	-13807	0.33	1.5	2.1	3952	100	
SLU 2	0	0	-18077	0.33	1.5	2.74	4448	100	
SLU 3	250	-33	-13978	0.33	1.5	2.12	3973	100	
SLU 3	0	0	-18226	0.33	1.5	2.77	4464	100	
SLU 4	250	-33	-14003	0.33	1.5	2.13	3976	100	
SLU 4	0	0	-18247	0.33	1.5	2.77	4467	100	
SLU 5	250	-34	-14027	0.33	1.5	2.13	3979	100	
SLU 5	0	0	-18269	0.33	1.5	2.77	4469	100	
SLU 6	250	-32	-13945	0.33	1.5	2.12	3969	100	
SLU 6	0	0	-18198	0.33	1.5	2.76	4461	100	
SLU 7	250	-33	-13993	0.33	1.5	2.12	3975	100	
SLU 7	0	0	-18240	0.33	1.5	2.77	4466	100	
SLU 8	250	-35	-14164	0.33	1.5	2.15	3996	100	
SLU 8	0	0	-18389	0.33	1.5	2.79	4482	100	
SLU 9	250	-35	-14190	0.33	1.5	2.15	3999	100	
SLU 9	0	0	-18410	0.33	1.5	2.79	4484	100	
SLU 10	250	-36	-14213	0.33	1.5	2.16	4002	100	
SLU 10	0	0	-18432	0.33	1.5	2.8	4487	100	
SLU 11	250	-39	-17887	0.33	1.5	2.72	4427	100	
SLU 11	0	0	-23445	0.33	1.5	3.56	5002	100	
SLU 12	250	-40	-17934	0.33	1.5	2.72	4432	100	
SLU 12	0	0	-23488	0.33	1.5	3.57	5007	100	
SLU 13	250	-42	-18105	0.33	1.5	2.75	4451	100	
SLU 13	0	1	-23637	0.33	1.5	3.59	5021	100	
SLU 14	250	-42	-18131	0.33	1.5	2.75	4454	100	
SLU 14	0	1	-23658	0.33	1.5	3.59	5023	100	
SLU 15	250	-43	-18155	0.33	1.5	2.76	4457	100	
SLU 15	0	1	-23679	0.33	1.5	3.59	5025	100	
SLU 16	250	-42	-18073	0.33	1.5	2.74	4448	100	
SLU 16	0	0	-23608	0.33	1.5	3.58	5018	100	
SLU 17	250	-42	-18121	0.33	1.5	2.75	4453	100	
SLU 17	0	0	-23651	0.33	1.5	3.59	5022	100	
SLU 18	250	-44	-18292	0.33	1.5	2.78	4471	100	
SLU 18	0	1	-23800	0.33	1.5	3.61	5037	100	
SLU 19	250	-44	-18317	0.33	1.5	2.78	4474	100	
SLU 19	0	1	-23821	0.33	1.5	3.62	5039	100	
SLU 20	250	-45	-18341	0.33	1.5	2.78	4477	100	
SLU 20	0	1	-23842	0.33	1.5	3.62	5041	100	

Verifica a pressoflessione fuori piano D.M. 14-01-08 (N.T.C.)
quota 200 Ta 0.04 Wa 0.19 denominatore 8

comb.	fd	Sa	x	N	M	Mc	c.s.	
SLV 1	11	0.3	19.31	-14137	28562	464305	16.26	
SLV 2	11	0.3	19.51	-14282	28562	467636	16.37	
SLV 3	11	0.3	19.44	-14230	28562	466441	16.33	
SLV 4	11	0.3	19.64	-14374	28562	469754	16.45	
SLV 5	11	0.3	19.74	-14448	28562	471442	16.51	
SLV 6	11	0.3	19.96	-14609	28562	475081	16.63	
SLV 7	11	0.3	20.16	-14756	28562	478386	16.75	
SLV 8	11	0.3	20.38	-14917	28562	481958	16.87	
SLV 9	11	0.3	20.24	-14814	28562	479674	16.79	
SLV 10	11	0.3	20.46	-14974	28562	483232	16.92	
SLV 11	11	0.3	20.66	-15122	28562	486464	17.03	
SLV 12	11	0.3	20.88	-15282	28562	489955	17.15	
SLV 13	11	0.3	20.98	-15356	28562	491552	17.21	
SLV 14	11	0.3	21.18	-15500	28562	494642	17.32	
SLV 15	11	0.3	21.11	-15449	28562	493534	17.28	
SLV 16	11	0.3	21.3	-15593	28562	496606	17.39	

Verifica dei meccanismi locali di collasso con analisi cinematica lineare
accelerazione limite = 92,39; forza di aggancio al piano = 30

combinazione	N top	N base	V orto	alfa0	M*	e*	a0*	
SLV 1	-8952	-17483	1344	0.215	13.763	0.915	171	
SLV 2	-9021	-17653	1334	0.215	13.832	0.916	171	
SLV 3	-8914	-17497	1414	0.209	13.725	0.915	166	
SLV 4	-8983	-17667	1404	0.21	13.794	0.916	166	
SLV 5	-9127	-17884	1245	0.222	13.938	0.916	176	
SLV 6	-9204	-18074	1234	0.222	14.015	0.917	176	
SLV 7	-9000	-17931	1476	0.204	13.812	0.916	162	
SLV 8	-9077	-18121	1465	0.204	13.889	0.916	162	
SLV 9	-9242	-18251	1229	0.222	14.054	0.917	176	
SLV 10	-9319	-18440	1218	0.222	14.131	0.917	176	
SLV 11	-9116	-18298	1459	0.204	13.927	0.916	162	
SLV 12	-9193	-18487	1448	0.204	14.004	0.916	162	
SLV 13	-9337	-18704	1290	0.216	14.148	0.917	171	
SLV 14	-9406	-18874	1280	0.216	14.217	0.917	171	
SLV 15	-9299	-18718	1359	0.211	14.11	0.917	167	
SLV 16	-9368	-18888	1349	0.211	14.179	0.917	167	

Maschio 26
Maschio considerato membratura sismica secondaria
Dati geometrici

X ini.	Y ini.	X fin.	Y fin.	quota i.	quota.s	l	sp.	h netta	h ini.	h fin.	a
1847.5	142.5	1847.5	240	L1	L2	97.5	85	400	500	500	

Materiale: Muratura in pietrame consolidata con iniezioni LC1
f medio 30
tau 0.9
E 24000
G 8053.69
Fattore di confidenza 1.35

Verifica a pressoflessione per azioni non sismiche 4.5.6.2 D.M. 14-01-08 (N.T.C.) gammaM 3

comb.	quota	N	M	p	es1	es2	ea	ev	e ver (cm)	Ft	Fl	Nu (daN)	
1	500	-14472	-28154	1	-5.84	1.88	2	0,00	5,96	0,75	0,94	43341	
1	200	-21579	77894	1	-5.84	1.88	2	0,00	2,98	0,86	0,88	46822	
1	0	-23237	-30025	1	-5.84	1.88	2	0,00	5,96	0,75	0,96	44307	
2	500	-14909	-28295	1	-5.88	1.82	2	0,00	6,06	0,75	0,94	43199	
2	200	-22099	81231	1	-5.88	1.82	2	0,00	3,03	0,86	0,88	46610	
2	0	-23695	-28616	1	-5.88	1.82	2	0,00	6,06	0,75	0,96	44215	
3	500	-16456	-26491	1	-5.61	2.26	2	0,00	5,34	0,78	0,95	45159	
3	200	-23983	96804	1	-5.61	2.26	2	0,00	2,67	0,87	0,87	46706	
3	0	-25304	-22625	1	-5.61	2.26	2	0,00	5,34	0,78	0,97	46250	
4	500	-16682	-25577	1	-5.45	2.49	2	0,00	4,96	0,79	0,95	46093	
4	200	-24271	100141	1	-5.45	2.49	2	0,00	2,48	0,88	0,87	46925	
4	0	-25535	-21466	1	-5.45	2.49	2	0,00	4,96	0,79	0,97	47167	
5	500	-16900	-25647	1	-5.48	2.46	2	0,00	5,02	0,79	0,95	45995	
5	200	-24531	101810	1	-5.48	2.46	2	0,00	2,51	0,88	0,87	46827	
5	0	-25764	-20762	1	-5.48	2.46	2	0,00	5,02	0,79	0,97	47096	
6	500	-16297	-26696	1	-5.61	2.25	2	0,00	5,35	0,78	0,95	45098	
6	200	-23785	95104	1	-5.61	2.25	2	0,00	2,68	0,87	0,87	46763	
6	0	-25134	-23523	1	-5.61	2.25	2	0,00	5,35	0,78	0,97	46167	
7	500	-16734	-26837	1	-5.65	2.2	2	0,00	5,46	0,77	0,95	44925	
7	200	-24305	98442	1	-5.65	2.2	2	0,00	2,73	0,87	0,87	46571	
7	0	-25592	-22114	1	-5.65	2.2	2	0,00	5,46	0,77	0,97	46046	
8	500	-18281	-25033	1	-5.42	2.56	2	0,00	4,86	0,79	0,96	46564	
8	200	-26189	114015	1	-5.42	2.56	2	0,00	2,43	0,88	0,86	46629	
8	0	-27201	-16123	1	-5.42	2.56	2	0,00	4,86	0,79	0,98	47774	
9	500	-18507	-24119	1	-5.29	2.76	2	0,00	4,53	0,81	0,96	47397	
9	200	-26477	117352	1	-5.29	2.76	2	0,00	2,26	0,89	0,86	46819	
9	0	-27432	-14964	1	-5.29	2.76	2	0,00	4,53	0,81	0,98	48596	
10	500	-18725	-24189	1	-5.31	2.73	2	0,00	4,58	0,80	0,96	47292	
10	200	-26737	119020	1	-5.31	2.73	2	0,00	2,29	0,89	0,86	46731	
10	0	-27661	-14260	1	-5.31	2.73	2	0,00	4,58	0,80	0,98	48517	
11	500	-18813	-36601	1	-5.84	1.88	2	0,00	5,96	0,75	0,94	43341	
11	200	-28053	101262	1	-5.84	1.88	2	0,00	2,98	0,86	0,88	46822	
11	0	-30208	-39032	1	-5.84	1.88	2	0,00	5,96	0,75	0,96	44307	
12	500	-19250	-36741	1	-5.87	1.83	2	0,00	6,04	0,75	0,94	43231	
12	200	-28573	104599	1	-5.87	1.83	2	0,00	3,02	0,86	0,88	46658	
12	0	-30666	-37623	1	-5.87	1.83	2	0,00	6,04	0,75	0,96	44235	

comb.	quota	N	M	p	es1	es2	ea	ev	e ver (cm)	Ft	Fl	Nu (daN)	
13	500	-20797	-34937	1	-5.65	2.18	2	0,00	5,47	0,77	0,95	44777	
13	200	-30457	120172	1	-5.65	2.18	2	0,00	2,74	0,87	0,87	46735	
13	0	-32275	-31632	1	-5.65	2.18	2	0,00	5,47	0,77	0,97	45837	
14	500	-21024	-34023	1	-5.53	2.36	2	0,00	5,17	0,78	0,95	45520	
14	200	-30745	123509	1	-5.53	2.36	2	0,00	2,58	0,88	0,87	46911	
14	0	-32506	-30474	1	-5.53	2.36	2	0,00	5,17	0,78	0,97	46566	
15	500	-21242	-34093	1	-5.55	2.34	2	0,00	5,21	0,78	0,95	45447	
15	200	-31005	125178	1	-5.55	2.34	2	0,00	2,61	0,88	0,87	46833	
15	0	-32735	-29769	1	-5.55	2.34	2	0,00	5,21	0,78	0,97	46514	
16	500	-20638	-35143	1	-5.66	2.17	2	0,00	5,48	0,77	0,95	44726	
16	200	-30259	118472	1	-5.66	2.17	2	0,00	2,74	0,87	0,87	46779	
16	0	-32105	-32531	1	-5.66	2.17	2	0,00	5,48	0,77	0,97	45770	
17	500	-21075	-35283	1	-5.69	2.13	2	0,00	5,56	0,77	0,95	44596	
17	200	-30779	121810	1	-5.69	2.13	2	0,00	2,78	0,87	0,87	46627	
17	0	-32564	-31121	1	-5.69	2.13	2	0,00	5,56	0,77	0,97	45680	
18	500	-22622	-33479	1	-5.5	2.43	2	0,00	5,07	0,79	0,95	45938	
18	200	-32663	137383	1	-5.5	2.43	2	0,00	2,54	0,88	0,87	46679	
18	0	-34172	-25130	1	-5.5	2.43	2	0,00	5,07	0,79	0,98	47087	
19	500	-22849	-32565	1	-5.39	2.59	2	0,00	4,80	0,80	0,95	46616	
19	200	-32951	140720	1	-5.39	2.59	2	0,00	2,40	0,88	0,86	46836	
19	0	-34403	-23972	1	-5.39	2.59	2	0,00	4,80	0,80	0,98	47754	
20	500	-23067	-32635	1	-5.41	2.57	2	0,00	4,84	0,79	0,95	46538	
20	200	-33211	142389	1	-5.41	2.57	2	0,00	2,42	0,88	0,86	46764	
20	0	-34632	-23267	1	-5.41	2.57	2	0,00	4,84	0,79	0,98	47697	

Verifica a taglio con rottura per fessurazione diagonale per azioni non sismiche Circ.617 C8.7.1.5 gammaM 3

comb.	quota	Vd	N	ftd	b	sigma0	Vu	c.s.	
SLU 1	250	-31	-20893	0.33	1.5	2.52	5389	100	
SLU 1	100	77	-23301	0.33	1.5	2.81	5657	73.44	
SLU 2	250	-33	-21413	0.33	1.5	2.58	5448	100	
SLU 2	100	78	-23816	0.33	1.5	2.87	5713	73.47	
SLU 3	250	-35	-23296	0.33	1.5	2.81	5656	100	
SLU 3	100	79	-25680	0.33	1.5	3.1	5909	74.59	
SLU 4	250	-35	-23583	0.33	1.5	2.85	5687	100	
SLU 4	100	79	-25963	0.33	1.5	3.13	5939	75.05	
SLU 5	250	-35	-23843	0.33	1.5	2.88	5715	100	
SLU 5	100	79	-26220	0.33	1.5	3.16	5965	75.04	
SLU 6	250	-34	-23098	0.33	1.5	2.79	5635	100	
SLU 6	100	79	-25485	0.33	1.5	3.08	5889	74.59	
SLU 7	250	-36	-23618	0.33	1.5	2.85	5691	100	
SLU 7	100	80	-26000	0.33	1.5	3.14	5943	74.59	
SLU 8	250	-38	-25501	0.33	1.5	3.08	5891	100	
SLU 8	100	81	-27863	0.33	1.5	3.36	6132	75.57	
SLU 9	250	-38	-25788	0.33	1.5	3.11	5921	100	
SLU 9	100	81	-28147	0.33	1.5	3.4	6160	76	
SLU 10	250	-38	-26048	0.33	1.5	3.14	5948	100	
SLU 10	100	81	-28404	0.33	1.5	3.43	6186	75.98	
SLU 11	250	-41	-27161	0.33	1.5	3.28	6061	100	
SLU 11	100	100	-30291	0.33	1.5	3.66	6370	63.62	
SLU 12	250	-42	-27681	0.33	1.5	3.34	6114	100	
SLU 12	100	101	-30807	0.33	1.5	3.72	6420	63.65	
SLU 13	250	-44	-29563	0.33	1.5	3.57	6300	100	
SLU 13	100	102	-32670	0.33	1.5	3.94	6596	64.45	
SLU 14	250	-44	-29851	0.33	1.5	3.6	6328	100	
SLU 14	100	102	-32953	0.33	1.5	3.98	6622	64.77	
SLU 15	250	-45	-30110	0.33	1.5	3.63	6353	100	
SLU 15	100	103	-33211	0.33	1.5	4.01	6646	64.77	
SLU 16	250	-44	-29366	0.33	1.5	3.54	6281	100	
SLU 16	100	102	-32475	0.33	1.5	3.92	6578	64.45	
SLU 17	250	-45	-29886	0.33	1.5	3.61	6331	100	
SLU 17	100	103	-32990	0.33	1.5	3.98	6625	64.46	
SLU 18	250	-47	-31769	0.33	1.5	3.83	6511	100	
SLU 18	100	104	-34854	0.33	1.5	4.21	6796	65.19	
SLU 19	250	-47	-32056	0.33	1.5	3.87	6538	100	
SLU 19	100	104	-35137	0.33	1.5	4.24	6821	65.49	
SLU 20	250	-48	-32316	0.33	1.5	3.9	6563	100	
SLU 20	100	105	-35395	0.33	1.5	4.27	6845	65.48	

Verifica a pressoflessione fuori piano D.M. 14-01-08 (N.T.C.)
quota 200 Ta 0.04 Wa 0.19 denominatore 8

comb.	fd	Sa	x	N	M	Mc	c.s.	
SLV 1	11	0.3	25.08	-23097	35933	691950	19.26	
SLV 2	11	0.3	25.84	-23793	35933	703810	19.59	
SLV 3	11	0.3	23.16	-21325	35933	659390	18.35	
SLV 4	11	0.3	23.91	-22021	35933	672589	18.72	
SLV 5	11	0.3	28.07	-25845	35933	735711	20.47	
SLV 6	11	0.3	28.91	-26620	35933	746573	20.78	
SLV 7	11	0.3	21.65	-19939	35933	631546	17.58	
SLV 8	11	0.3	22.5	-20715	35933	647378	18.02	
SLV 9	11	0.3	28.74	-26462	35933	744419	20.72	
SLV 10	11	0.3	29.58	-27237	35933	754761	21	
SLV 11	11	0.3	22.32	-20557	35933	644215	17.93	
SLV 12	11	0.3	23.17	-21332	35933	659527	18.35	
SLV 13	11	0.3	27.32	-25156	35933	725509	20.19	
SLV 14	11	0.3	28.07	-25852	35933	735813	20.48	
SLV 15	11	0.3	25.39	-23384	35933	696911	19.39	
SLV 16	11	0.3	26.15	-24080	35933	708553	19.72	

Verifica dei meccanismi locali di collasso con analisi cinematica lineare
accelerazione limite = 92,39; forza di aggancio al piano = 30

combinazione	N top	N base	V orto	alfa0	M*	e*	a0*	
SLV 1	-16117	-24690	1393	0.203	22.194	0.93	159	
SLV 2	-16167	-25186	1379	0.204	22.244	0.93	159	
SLV 3	-15978	-23646	1425	0.202	22.053	0.93	158	
SLV 4	-16028	-24143	1411	0.203	22.104	0.93	159	
SLV 5	-16317	-26261	1456	0.199	22.396	0.931	156	
SLV 6	-16373	-26814	1440	0.2	22.452	0.931	156	
SLV 7	-15853	-22782	1561	0.196	21.928	0.929	153	
SLV 8	-15909	-23335	1545	0.197	21.984	0.929	154	
SLV 9	-16352	-26588	1540	0.195	22.431	0.931	152	

muratura

combinazione	N top	N base	V orto	alfa0	M*	e*	a0*	
SLV 10	-16408	-27141	1524	0.195	22.487	0.931	153	
SLV 11	-15888	-23109	1646	0.192	21.963	0.929	150	
SLV 12	-15944	-23662	1630	0.192	22.019	0.93	150	
SLV 13	-16233	-25780	1675	0.189	22.311	0.93	147	
SLV 14	-16283	-26277	1661	0.189	22.361	0.93	148	
SLV 15	-16094	-24736	1707	0.188	22.171	0.93	147	
SLV 16	-16144	-25233	1693	0.188	22.221	0.93	147	

Maschio 27
Dati geometrici

X ini.	Y ini.	X fin.	Y fin.	quota i.	quota.s	l	sp.	h netta	h ini.	h fin.	a
1847.5	360	1847.5	670	L1	L2	310	85	400	500	500	

Materiale: Muratura in pietrame consolidata con iniezioni LC1
f medio 30
tau 0.9
E 24000
G 8053.69
Fattore di confidenza 1.35

Rinforzo con rete e betoncino sulla faccia sinistra
Betoncino: C25/30
spessore: 3
acciaio materiale: B450C
BARRE VERTICALI
diametro (mm) 5
passo 20
ancorate ad entrambe le estremità
BARRE ORIZZONTALI
diametro (mm) 5
passo 20
ancorate ad entrambe le estremità

Verifica a pressoflessione nel piano e taglio delle sezioni rinforzate 7.8.3.2 D.M. 14-01-08 (N.T.C.)

comb.	quota sezione	gamma m.	gamma s.	gamma c.	N	V	V orto	M	M orto	c.s.	d	fvd	Vt,c	Vt,M	Vt,S	
SLU 1	0	3	1.15	1.5	-90081	3540	-36	1899689	3329	3.53	310	0.46	58556	12095	7145	
SLU 1	500	3	1.15	1.5	-47814	1198	2502	550496	178763	6.83	310	0.35	58556	9167	7145	
SLU 2	0	3	1.15	1.5	-91587	3532	-37	1927584	3252	3.47	310	0.46	58556	12200	7145	
SLU 2	500	3	1.15	1.5	-49234	1161	2595	572434	185308	6.64	310	0.35	58556	9266	7145	
SLU 3	0	3	1.15	1.5	-97194	3721	-38	2031286	3438	3.28	310	0.48	58556	12588	7145	
SLU 3	500	3	1.15	1.5	-53905	1288	2693	580669	192593	6.06	310	0.36	58556	9589	7145	
SLU 4	0	3	1.15	1.5	-98091	3810	-39	2047834	3596	3.25	310	0.48	58556	12650	7145	
SLU 4	500	3	1.15	1.5	-54486	1381	2642	562260	189170	6	310	0.37	58556	9630	7145	
SLU 5	0	3	1.15	1.5	-98844	3806	-39	2061782	3557	3.22	310	0.48	58556	12702	7145	
SLU 5	500	3	1.15	1.5	-55196	1362	2689	573230	192442	5.92	310	0.37	58556	9679	7145	
SLU 6	0	3	1.15	1.5	-96283	3707	-37	2008315	3305	3.31	310	0.48	58556	12525	7145	
SLU 6	500	3	1.15	1.5	-53068	1287	2642	565777	189343	6.16	310	0.36	58556	9531	7145	
SLU 7	0	3	1.15	1.5	-97790	3699	-38	2036210	3228	3.26	310	0.48	58556	12629	7145	
SLU 7	500	3	1.15	1.5	-54489	1250	2735	587715	195889	6	310	0.37	58556	9630	7145	
SLU 8	0	3	1.15	1.5	-103397	3888	-39	2139912	3414	3.09	310	0.49	58556	13018	7145	
SLU 8	500	3	1.15	1.5	-59159	1378	2833	595950	203173	5.52	310	0.38	58556	9953	7145	
SLU 9	0	3	1.15	1.5	-104293	3977	-40	2156460	3572	3.06	310	0.5	58556	13080	7145	
SLU 9	500	3	1.15	1.5	-59740	1470	2782	577542	199750	5.47	310	0.38	58556	9994	7145	
SLU 10	0	3	1.15	1.5	-105047	3973	-40	2170407	3533	3.04	310	0.5	58556	13132	7145	
SLU 10	500	3	1.15	1.5	-60450	1451	2828	588511	203023	5.4	310	0.38	58556	10043	7145	
SLU 11	0	3	1.15	1.5	-117105	4602	-47	2469596	4328	2.72	310	0.53	58556	13967	7145	
SLU 11	500	3	1.15	1.5	-62158	1557	3253	715644	232391	5.26	310	0.39	58556	10161	7145	
SLU 12	0	3	1.15	1.5	-118612	4594	-47	2497491	4251	2.68	310	0.53	58556	14071	7145	
SLU 12	500	3	1.15	1.5	-63579	1520	3346	737583	238937	5.14	310	0.39	58556	10259	7145	
SLU 13	0	3	1.15	1.5	-124219	4783	-49	2601193	4437	2.56	310	0.55	58556	14460	7145	
SLU 13	500	3	1.15	1.5	-68249	1648	3444	745818	246222	4.79	310	0.4	58556	10583	7145	
SLU 14	0	3	1.15	1.5	-125115	4872	-50	2617741	4594	2.55	310	0.55	58556	14522	7145	
SLU 14	500	3	1.15	1.5	-68830	1740	3393	727409	242798	4.75	310	0.4	58556	10623	7145	
SLU 15	0	3	1.15	1.5	-125868	4868	-50	2631688	4556	2.53	310	0.55	58556	14574	7145	
SLU 15	500	3	1.15	1.5	-69540	1721	3439	738378	246071	4.7	310	0.41	58556	10672	7145	
SLU 16	0	3	1.15	1.5	-123307	4769	-48	2578222	4304	2.58	310	0.55	58556	14397	7145	
SLU 16	500	3	1.15	1.5	-67412	1647	3393	730925	242972	4.85	310	0.4	58556	10525	7145	
SLU 17	0	3	1.15	1.5	-124814	4761	-48	2606117	4227	2.55	310	0.55	58556	14501	7145	
SLU 17	500	3	1.15	1.5	-68833	1609	3486	752864	249517	4.75	310	0.4	58556	10623	7145	
SLU 18	0	3	1.15	1.5	-130421	4950	-50	2709818	4413	2.44	310	0.57	58556	14889	7145	
SLU 18	500	3	1.15	1.5	-73503	1737	3583	761099	256802	4.44	310	0.42	58556	10947	7145	
SLU 19	0	3	1.15	1.5	-131317	5039	-51	2726366	4570	2.43	310	0.57	58556	14952	7145	
SLU 19	500	3	1.15	1.5	-74084	1829	3532	742690	253379	4.41	310	0.42	58556	10987	7145	
SLU 20	0	3	1.15	1.5	-132071	5035	-51	2740314	4532	2.41	310	0.57	58556	15004	7145	
SLU 20	500	3	1.15	1.5	-74794	1811	3579	753659	256652	4.37	310	0.42	58556	11036	7145	

Verifica a pressoflessione nel piano e taglio delle sezioni rinforzate 7.8.3.2 D.M. 14-01-08 (N.T.C.)

comb.	quota sezione	gamma m.	gamma s.	gamma c.	N	V	V orto	M	M orto	c.s.	d	fvd	Vt,c	Vt,M	Vt,S	
SLV 1	0	2	1.15	1.5	-82064	2577	1550	1394909	-125852	4.93	310	0.66	87833	17310	7145	
SLV 1	500	2	1.15	1.5	-39803	107	523	299979	101870	10.17	310	0.49	87833	12919	7145	
SLV 2	0	2	1.15	1.5	-82834	1479	1554	1072098	-126875	4.89	310	0.66	87833	17390	7145	
SLV 2	500	2	1.15	1.5	-42055	-1720	643	351728	111696	9.62	310	0.5	87833	13153	7145	
SLV 3	0	2	1.15	1.5	-78243	5141	1347	2325417	-85170	4.77	305	0.65	86417	16771	7030	
SLV 3	500	2	1.15	1.5	-29529	3447	-583	437651	62341	13.71	310	0.45	87833	11851	7145	
SLV 4	0	2	1.15	1.5	-79013	4042	1351	2002606	-86193	4.9	305	0.65	86417	16851	7030	
SLV 4	500	2	1.15	1.5	-31781	1620	-463	489401	72167	12.74	310	0.46	87833	12085	7145	
SLV 5	0	2	1.15	1.5	-97174	-74	745	539742	-96684	4.17	310	0.72	87833	18880	7145	
SLV 5	500	2	1.15	1.5	-63462	-3385	3621	254262	218045	6.38	310	0.58	87833	15377	7145	
SLV 6	0	2	1.15	1.5	-98032	-1297	750	180248	-97823	4.13	310	0.72	87833	18969	7145	

comb.	quota sezione	gamma m.	gamma s.	gamma c.	N	V	V orto	M	M orto	c.s.	d	fvd	Vt,c	Vt,M	Vt,S	
SLV 6	500	2	1.15	1.5	-65970	-5420	3755	311893	228987	6.14	310	0.59	87833	15638	7145	
SLV 7	0	2	1.15	1.5	-84436	8471	68	3641436	38923	3.93	285	0.7	80750	16848	6569	
SLV 7	500	2	1.15	1.5	-29216	7749	-64	713172	86280	13.36	0	0	0	0	0	
SLV 8	0	2	1.15	1.5	-85293	7247	72	3281942	37784	4.06	295	0.69	83583	17220	6800	
SLV 8	500	2	1.15	1.5	-31724	5715	70	770802	97223	12.31	0	0	0	0	0	
SLV 9	0	2	1.15	1.5	-106342	163	-147	721529	-31050	3.81	310	0.75	87833	19832	7145	
SLV 9	500	2	1.15	1.5	-73578	-3127	5177	355270	278572	5.5	310	0.62	87833	16428	7145	
SLV 10	0	2	1.15	1.5	-107199	-1060	-143	362035	-32190	3.78	310	0.76	87833	19921	7145	
SLV 10	500	2	1.15	1.5	-76086	-5161	5311	412900	289515	5.32	310	0.63	87833	16689	7145	
SLV 11	0	2	1.15	1.5	-93604	8708	-824	3823222	104557	3.62	295	0.72	83583	18084	6800	
SLV 11	500	2	1.15	1.5	-39332	8008	1492	814179	146808	10.22	310	0.49	87833	12870	7145	
SLV 12	0	2	1.15	1.5	-94461	7485	-820	3463728	103417	3.72	295	0.72	83583	18173	6800	
SLV 12	500	2	1.15	1.5	-41840	5973	1626	871810	157751	9.59	310	0.5	87833	13131	7145	
SLV 13	0	2	1.15	1.5	-112623	3369	-1425	2000865	92926	3.59	310	0.78	87833	20485	7145	
SLV 13	500	2	1.15	1.5	-73521	968	5709	636671	303628	5.51	310	0.62	87833	16422	7145	
SLV 14	0	2	1.15	1.5	-113393	2270	-1422	1678054	91903	3.57	310	0.78	87833	20565	7145	
SLV 14	500	2	1.15	1.5	-75774	-859	5830	688420	313454	5.34	310	0.63	87833	16656	7145	
SLV 15	0	2	1.15	1.5	-108801	5932	-1628	2931373	133609	3.51	305	0.77	86417	19946	7030	
SLV 15	500	2	1.15	1.5	-63247	4308	4604	774344	264099	6.4	310	0.58	87833	15355	7145	
SLV 16	0	2	1.15	1.5	-109571	4834	-1625	2608562	132585	3.58	0	0	0	0	0	
SLV 16	500	2	1.15	1.5	-65500	2481	4724	826093	273925	6.18	310	0.59	87833	15589	7145	

Per la verifica a pressoflessione fuori piano non é stato considerato il rinforzo predisposto.
Le motivazioni per cui la sezione di verifica nonostante abbia un rinforzo di tipo FRP non venga condotta come sezione rinforzata possono essere:
- Il rinforzo predisposto non è atto ad essere utilizzato per queste tipologie di verifiche.
- Non sono stati predisposti rinforzi di tipo rete e betoncino oppure FRP sia orizzontali che verticali.
- Non sono stati predisposti rinforzi di tipo rete e betoncino oppure FRP su entrambi i lati.

Verifica a pressoflessione fuori piano D.M. 14-01-08 (N.T.C.)
quota 200 Ta 0 Wa 0.19 denominatore 8

comb.	fd	Sa	x	N	M	Mc	c.s.	
SLV 1	11	0.24	27.28	-79863	94420	2304944	24.41	
SLV 2	11	0.24	28.41	-83184	94420	2353607	24.93	
SLV 3	11	0.24	23.4	-68509	94420	2110086	22.35	
SLV 4	11	0.24	24.53	-71829	94420	2171627	23	
SLV 5	11	0.24	35.88	-105041	94420	2579944	27.32	
SLV 6	11	0.24	37.14	-108739	94420	2602098	27.56	
SLV 7	11	0.24	22.95	-67193	94420	2084650	22.08	
SLV 8	11	0.24	24.21	-70891	94420	2154608	22.82	
SLV 9	11	0.24	39.43	-115429	94420	2630311	27.86	
SLV 10	11	0.24	40.69	-119127	94420	2639345	27.95	
SLV 11	11	0.24	26.5	-77581	94420	2269306	24.03	
SLV 12	11	0.24	27.76	-81279	94420	2326144	24.64	
SLV 13	11	0.24	39.1	-114490	94420	2627274	27.83	
SLV 14	11	0.24	40.24	-117810	94420	2636665	27.92	
SLV 15	11	0.24	35.23	-103135	94420	2566705	27.18	
SLV 16	11	0.24	36.36	-106456	94420	2588974	27.42	

Per la verifica seguente non si considerano i rinforzi predisposti.

Verifica dei meccanismi locali di collasso con analisi cinematica lineare
accelerazione limite = 92,39; forza di aggancio al piano = 30

combinazione	N top	N base	V orto	alfa0	M*	e*	a0*	
SLV 1	-39803	-82064	523	0.301	59.052	0.92	238	
SLV 2	-42055	-82834	643	0.291	61.313	0.922	229	
SLV 3	-29529	-78243	-583	0.348	48.798	0.908	279	
SLV 4	-31781	-79013	-463	0.338	51.036	0.911	270	
SLV 5	-63462	-97174	3621	0.198	82.914	0.939	154	
SLV 6	-65970	-98032	3755	0.194	85.453	0.94	150	
SLV 7	-29216	-84436	-64	0.363	48.488	0.908	290	
SLV 8	-31724	-85293	70	0.348	50.979	0.911	277	
SLV 9	-73578	-106342	5177	0.169	93.162	0.944	130	
SLV 10	-76086	-107199	5311	0.166	95.706	0.946	127	
SLV 11	-39332	-93604	1492	0.284	58.58	0.919	224	
SLV 12	-41840	-94461	1626	0.273	61.097	0.922	215	
SLV 13	-73521	-112623	5709	0.163	93.105	0.944	125	
SLV 14	-75774	-113393	5830	0.16	95.389	0.946	123	
SLV 15	-63247	-108801	4604	0.185	82.696	0.939	144	
SLV 16	-65500	-109571	4724	0.182	84.976	0.94	140	

Maschio 28
Maschio considerato membratura sismica secondaria
Dati geometrici

X ini.	Y ini.	X fin.	Y fin.	quota i.	quota.s	l	sp.	h netta	h ini.	h fin.	a
1847.5	790	1847.5	900	L1	L2	110	85	400	500	500	

Materiale: Muratura in pietrame consolidata con iniezioni LC1
f medio 30
tau 0.9
E 24000
G 8053.69
Fattore di confidenza 1.35

Verifica a pressoflessione per azioni non sismiche 4.5.6.2 D.M. 14-01-08 (N.T.C.) gammaM 3

comb.	quota	N	M	p	es1	es2	ea	ev	e ver (cm)	Ft	Fl	Nu (daN)	
1	500	-17156	60862	1	-3.86	1.79	2	0,00	4,08	0,82	0,90	51208	
1	200	-26383	23569	1	-3.86	1.79	2	0,00	2,04	0,90	0,97	60546	
1	0	-29373	-65197	1	-3.86	1.79	2	0,00	4,08	0,82	0,94	53352	
2	500	-17566	61973	1	-3.91	1.74	2	0,00	4,17	0,82	0,90	51039	
2	200	-26881	23565	1	-3.91	1.74	2	0,00	2,08	0,90	0,98	60467	
2	0	-29831	-66905	1	-3.91	1.74	2	0,00	4,17	0,82	0,94	53106	

muratura

comb.	quota	N	M	p	es1	es2	ea	ev	e ver (cm)	Ft	Fl	Nu (daN)	
3	500	-19314	66168	1	-3.69	2.17	2	0,00	3,51	0,84	0,90	52700	
3	200	-28937	26724	1	-3.69	2.17	2	0,00	2,00	0,90	0,97	60589	
3	0	-31711	-71088	1	-3.69	2.17	2	0,00	3,51	0,84	0,94	54661	
4	500	-19653	66854	1	-3.56	2.38	2	0,00	3,17	0,86	0,90	53522	
4	200	-29320	28081	1	-3.56	2.38	2	0,00	2,00	0,90	0,97	60529	
4	0	-32059	-71173	1	-3.56	2.38	2	0,00	3,17	0,86	0,94	55507	
5	500	-19858	67410	1	-3.58	2.36	2	0,00	3,22	0,85	0,90	53423	
5	200	-29569	28079	1	-3.58	2.36	2	0,00	2,00	0,90	0,97	60543	
5	0	-32288	-72027	1	-3.58	2.36	2	0,00	3,22	0,85	0,94	55374	
6	500	-19044	65212	1	-3.68	2.18	2	0,00	3,51	0,84	0,90	52721	
6	200	-28606	26715	1	-3.68	2.18	2	0,00	2,00	0,90	0,97	60571	
6	0	-31410	-69759	1	-3.68	2.18	2	0,00	3,51	0,84	0,94	54714	
7	500	-19455	66323	1	-3.73	2.13	2	0,00	3,60	0,84	0,90	52537	
7	200	-29105	26711	1	-3.73	2.13	2	0,00	2,00	0,90	0,97	60600	
7	0	-31868	-71467	1	-3.73	2.13	2	0,00	3,60	0,84	0,94	54461	
8	500	-21203	70518	1	-3.54	2.49	2	0,00	3,05	0,86	0,91	53934	
8	200	-31161	29870	1	-3.54	2.49	2	0,00	2,00	0,90	0,97	60528	
8	0	-33748	-75650	1	-3.54	2.49	2	0,00	3,05	0,86	0,94	55766	
9	500	-21542	71204	1	-3.42	2.68	2	0,00	2,75	0,87	0,91	54667	
9	200	-31544	31227	1	-3.42	2.68	2	0,00	2,00	0,90	0,97	60472	
9	0	-34096	-75735	1	-3.42	2.68	2	0,00	2,75	0,87	0,94	56522	
10	500	-21747	71760	1	-3.45	2.65	2	0,00	2,79	0,87	0,91	54566	
10	200	-31793	31225	1	-3.45	2.65	2	0,00	2,00	0,90	0,97	60486	
10	0	-34325	-76589	1	-3.45	2.65	2	0,00	2,79	0,87	0,94	56390	
11	500	-22302	79121	1	-3.86	1.79	2	0,00	4,08	0,82	0,90	51208	
11	200	-34298	30640	1	-3.86	1.79	2	0,00	2,04	0,90	0,97	60546	
11	0	-38185	-84756	1	-3.86	1.79	2	0,00	4,08	0,82	0,94	53352	
12	500	-22713	80232	1	-3.9	1.75	2	0,00	4,15	0,82	0,90	51077	
12	200	-34796	30636	1	-3.9	1.75	2	0,00	2,07	0,90	0,98	60485	
12	0	-38643	-86464	1	-3.9	1.75	2	0,00	4,15	0,82	0,94	53162	
13	500	-24461	84426	1	-3.72	2.09	2	0,00	3,63	0,84	0,90	52385	
13	200	-36852	33795	1	-3.72	2.09	2	0,00	2,00	0,90	0,97	60601	
13	0	-40523	-90647	1	-3.72	2.09	2	0,00	3,63	0,84	0,94	54386	
14	500	-24800	85113	1	-3.62	2.26	2	0,00	3,36	0,85	0,90	53040	
14	200	-37235	35152	1	-3.62	2.26	2	0,00	2,00	0,90	0,97	60553	
14	0	-40871	-90732	1	-3.62	2.26	2	0,00	3,36	0,85	0,94	55060	
15	500	-25005	85668	1	-3.64	2.24	2	0,00	3,40	0,85	0,90	52966	
15	200	-37484	35150	1	-3.64	2.24	2	0,00	2,00	0,90	0,97	60564	
15	0	-41100	-91586	1	-3.64	2.24	2	0,00	3,40	0,85	0,94	54958	
16	500	-24191	83471	1	-3.72	2.09	2	0,00	3,63	0,84	0,90	52399	
16	200	-36521	33785	1	-3.72	2.09	2	0,00	2,00	0,90	0,97	60587	
16	0	-40222	-89318	1	-3.72	2.09	2	0,00	3,63	0,84	0,94	54425	
17	500	-24602	84582	1	-3.76	2.06	2	0,00	3,70	0,84	0,90	52258	
17	200	-37020	33782	1	-3.76	2.06	2	0,00	2,00	0,90	0,97	60609	
17	0	-40680	-91026	1	-3.76	2.06	2	0,00	3,70	0,84	0,94	54229	
18	500	-26350	88776	1	-3.6	2.35	2	0,00	3,25	0,85	0,90	53399	
18	200	-39076	36940	1	-3.6	2.35	2	0,00	2,00	0,90	0,97	60551	
18	0	-42560	-95209	1	-3.6	2.35	2	0,00	3,25	0,85	0,94	55295	
19	500	-26688	89463	1	-3.51	2.5	2	0,00	3,00	0,86	0,90	53996	
19	200	-39458	38297	1	-3.51	2.5	2	0,00	2,00	0,90	0,97	60506	
19	0	-42908	-95294	1	-3.51	2.5	2	0,00	3,00	0,86	0,94	55911	
20	500	-26894	90018	1	-3.53	2.49	2	0,00	3,04	0,86	0,91	53920	
20	200	-39708	38296	1	-3.53	2.49	2	0,00	2,00	0,90	0,97	60517	
20	0	-43137	-96148	1	-3.53	2.49	2	0,00	3,04	0,86	0,94	55809	

Verifica a taglio con rottura per fessurazione diagonale per azioni non sismiche Circ.617 C8.7.1.5 gammaM 3

comb.	quota	Vd	N	ftd	b	sigma0	Vu	c.s.	
SLU 1	250	-3	-25500	0.33	1.5	2.73	6296	100	
SLU 1	100	-3	-28526	0.33	1.5	3.05	6620	100	
SLU 2	250	-3	-25999	0.33	1.5	2.78	6351	100	
SLU 2	100	-3	-29024	0.33	1.5	3.1	6672	100	
SLU 3	250	-3	-28055	0.33	1.5	3	6571	100	
SLU 3	100	-3	-31080	0.33	1.5	3.32	6883	100	
SLU 4	250	-3	-28438	0.33	1.5	3.04	6611	100	
SLU 4	100	-3	-31463	0.33	1.5	3.37	6921	100	
SLU 5	250	-3	-28687	0.33	1.5	3.07	6637	100	
SLU 5	100	-3	-31712	0.33	1.5	3.39	6946	100	
SLU 6	250	-3	-27724	0.33	1.5	2.97	6536	100	
SLU 6	100	-3	-30749	0.33	1.5	3.29	6849	100	
SLU 7	250	-3	-28222	0.33	1.5	3.02	6589	100	
SLU 7	100	-3	-31248	0.33	1.5	3.34	6899	100	
SLU 8	250	-3	-30279	0.33	1.5	3.24	6801	100	
SLU 8	100	-3	-33304	0.33	1.5	3.56	7103	100	
SLU 9	250	-3	-30661	0.33	1.5	3.28	6840	100	
SLU 9	100	-3	-33687	0.33	1.5	3.6	7140	100	
SLU 10	250	-3	-30911	0.33	1.5	3.31	6865	100	
SLU 10	100	-3	-33936	0.33	1.5	3.63	7164	100	
SLU 11	250	-4	-33150	0.33	1.5	3.55	7088	100	
SLU 11	100	-4	-37084	0.33	1.5	3.97	7462	100	
SLU 12	250	-4	-33649	0.33	1.5	3.6	7136	100	
SLU 12	100	-4	-37582	0.33	1.5	4.02	7508	100	
SLU 13	250	-4	-35705	0.33	1.5	3.82	7333	100	
SLU 13	100	-4	-39638	0.33	1.5	4.24	7696	100	
SLU 14	250	-4	-36088	0.33	1.5	3.86	7369	100	
SLU 14	100	-4	-40021	0.33	1.5	4.28	7730	100	
SLU 15	250	-4	-36337	0.33	1.5	3.89	7393	100	
SLU 15	100	-4	-40270	0.33	1.5	4.31	7752	100	
SLU 16	250	-4	-35374	0.33	1.5	3.78	7302	100	
SLU 16	100	-4	-39307	0.33	1.5	4.2	7666	100	
SLU 17	250	-4	-35873	0.33	1.5	3.84	7349	100	
SLU 17	100	-4	-39806	0.33	1.5	4.26	7711	100	
SLU 18	250	-4	-37929	0.33	1.5	4.06	7540	100	
SLU 18	100	-4	-41862	0.33	1.5	4.48	7893	100	
SLU 19	250	-4	-38311	0.33	1.5	4.1	7575	100	
SLU 19	100	-4	-42245	0.33	1.5	4.52	7927	100	
SLU 20	250	-4	-38561	0.33	1.5	4.12	7598	100	
SLU 20	100	-4	-42494	0.33	1.5	4.54	7949	100	

Verifica a pressoflessione fuori piano D.M. 14-01-08 (N.T.C.)

quota 200 Ta 0.04 Wa 0.19 denominatore 8

comb.	fd	Sa	x	N	M	Mc	c.s.	
SLV 1	11	0.3	21.66	-22504	40540	712677	17.58	
SLV 2	11	0.3	21.22	-22044	40540	702997	17.34	
SLV 3	11	0.3	23.02	-23914	40540	741100	18.28	
SLV 4	11	0.3	22.58	-23454	40540	732043	18.06	
SLV 5	11	0.3	23.79	-24717	40540	756436	18.66	
SLV 6	11	0.3	23.3	-24205	40540	746733	18.42	
SLV 7	11	0.3	28.31	-29416	40540	833727	20.57	
SLV 8	11	0.3	27.82	-28904	40540	826339	20.38	
SLV 9	11	0.3	26.95	-28001	40540	812689	20.05	
SLV 10	11	0.3	26.46	-27489	40540	804605	19.85	
SLV 11	11	0.3	31.48	-32700	40540	875123	21.59	
SLV 12	11	0.3	30.98	-32189	40540	869354	21.44	
SLV 13	11	0.3	32.2	-33451	40540	883130	21.78	
SLV 14	11	0.3	31.76	-32992	40540	878293	21.66	
SLV 15	11	0.3	33.56	-34861	40540	896696	22.12	
SLV 16	11	0.3	33.11	-34402	40540	892483	22.01	

Verifica dei meccanismi locali di collasso con analisi cinematica lineare
accelerazione limite = 92,39; forza di aggancio al piano = 30

combinazione	N top	N base	V orto	alfa0	M*	e*	a0*	
SLV 1	-13663	-26045	171	0.307	20.492	0.918	243	
SLV 2	-13434	-25678	148	0.311	20.263	0.918	246	
SLV 3	-14447	-27008	229	0.295	21.279	0.921	233	
SLV 4	-14219	-26641	206	0.299	21.05	0.92	236	
SLV 5	-16241	-28390	404	0.27	23.082	0.925	212	
SLV 6	-15987	-27981	378	0.273	22.826	0.925	215	
SLV 7	-18858	-31601	596	0.243	25.72	0.932	190	
SLV 8	-18603	-31192	570	0.246	25.463	0.931	192	
SLV 9	-19225	-31345	660	0.238	26.091	0.932	186	
SLV 10	-18971	-30936	634	0.241	25.834	0.932	188	
SLV 11	-21842	-34556	852	0.217	28.736	0.937	169	
SLV 12	-21587	-34147	827	0.219	28.478	0.937	170	
SLV 13	-23610	-35896	1025	0.204	30.525	0.941	158	
SLV 14	-23381	-35529	1002	0.206	30.294	0.94	159	
SLV 15	-24394	-36859	1082	0.199	31.32	0.942	154	
SLV 16	-24166	-36492	1059	0.201	31.089	0.941	155	

Maschio 29
Dati geometrici

X ini.	Y ini.	X fin.	Y fin.	quota i.	quota.s	l	sp.	h netta	h ini.	h fin.	a
1847.5	1020	1847.5	1325	L1	L2	305	85	400	500	500	

Materiale: Muratura in pietrame consolidata con iniezioni LC1
f medio 30
tau 0.9
E 24000
G 8053.69
Fattore di confidenza 1.35

Verifica a pressoflessione per azioni non sismiche 4.5.6.2 D.M. 14-01-08 (N.T.C.) gammaM 3

comb.	quota	N	M	p	es1	es2	ea	ev	e ver (cm)	Ft	Fl	Nu (daN)	
1	500	-47881	-638348	1	-5.76	1.77	2	0,00	5,98	0,75	0,86	124751	
1	200	-83006	-793105	1	-5.76	1.77	2	0,00	2,99	0,86	0,90	149354	
1	0	-79048	-8394	1	-5.76	1.77	2	0,00	5,98	0,75	1,00	144294	
2	500	-49264	-663312	1	-5.79	1.72	2	0,00	6,07	0,75	0,86	124013	
2	200	-84827	-798628	1	-5.79	1.72	2	0,00	3,04	0,86	0,90	149307	
2	0	-80473	12601	1	-5.79	1.72	2	0,00	6,07	0,75	1,00	143592	
3	500	-54309	-685937	1	-5.5	2.14	2	0,00	5,36	0,78	0,87	129602	
3	200	-91833	-779961	1	-5.5	2.14	2	0,00	2,68	0,87	0,91	153151	
3	0	-85936	94655	1	-5.5	2.14	2	0,00	5,36	0,78	0,99	147155	
4	500	-55089	-670668	1	-5.35	2.36	2	0,00	4,99	0,79	0,88	132565	
4	200	-93015	-766437	1	-5.35	2.36	2	0,00	2,50	0,88	0,92	154772	
4	0	-86852	108825	1	-5.35	2.36	2	0,00	4,99	0,79	0,99	149482	
5	500	-55780	-683151	1	-5.37	2.33	2	0,00	5,04	0,79	0,87	132134	
5	200	-93926	-769199	1	-5.37	2.33	2	0,00	2,52	0,88	0,92	154693	
5	0	-87565	119323	1	-5.37	2.33	2	0,00	5,04	0,79	0,99	148954	
6	500	-53399	-665540	1	-5.5	2.15	2	0,00	5,35	0,78	0,87	129942	
6	200	-90630	-778603	1	-5.5	2.15	2	0,00	2,67	0,87	0,91	153028	
6	0	-84970	75260	1	-5.5	2.15	2	0,00	5,35	0,78	0,99	147580	
7	500	-54782	-690505	1	-5.54	2.1	2	0,00	5,44	0,77	0,87	129136	
7	200	-92451	-784126	1	-5.54	2.1	2	0,00	2,72	0,87	0,91	152906	
7	0	-86395	96255	1	-5.54	2.1	2	0,00	5,44	0,77	0,99	146561	
8	500	-59828	-713129	1	-5.3	2.45	2	0,00	4,85	0,79	0,88	133839	
8	200	-99457	-765459	1	-5.3	2.45	2	0,00	2,43	0,88	0,92	156173	
8	0	-91858	178308	1	-5.3	2.45	2	0,00	4,85	0,79	0,98	149398	
9	500	-60607	-697861	1	-5.16	2.64	2	0,00	4,52	0,81	0,88	136508	
9	200	-100639	-751935	1	-5.16	2.64	2	0,00	2,26	0,89	0,92	157630	
9	0	-92774	192479	1	-5.16	2.64	2	0,00	4,52	0,81	0,98	151450	
10	500	-61298	-710343	1	-5.18	2.61	2	0,00	4,58	0,80	0,88	136067	
10	200	-101550	-754697	1	-5.18	2.61	2	0,00	2,29	0,89	0,92	157529	
10	0	-93487	202976	1	-5.18	2.61	2	0,00	4,58	0,80	0,98	150937	
11	500	-62245	-829852	1	-5.76	1.77	2	0,00	5,98	0,75	0,86	124751	
11	200	-107908	-1031036	1	-5.76	1.77	2	0,00	2,99	0,86	0,90	149354	
11	0	-102762	-10912	1	-5.76	1.77	2	0,00	5,98	0,75	1,00	144294	
12	500	-63628	-854817	1	-5.79	1.74	2	0,00	6,05	0,75	0,86	124180	
12	200	-109728	-1036560	1	-5.79	1.74	2	0,00	3,03	0,86	0,90	149317	
12	0	-104188	10083	1	-5.79	1.74	2	0,00	6,05	0,75	1,00	143822	
13	500	-68674	-877441	1	-5.56	2.07	2	0,00	5,49	0,77	0,87	128582	
13	200	-116735	-1017892	1	-5.56	2.07	2	0,00	2,75	0,87	0,91	152345	
13	0	-109651	92136	1	-5.56	2.07	2	0,00	5,49	0,77	0,99	146644	
14	500	-69453	-862173	1	-5.43	2.24	2	0,00	5,20	0,78	0,87	130936	
14	200	-117917	-1004368	1	-5.43	2.24	2	0,00	2,60	0,88	0,91	153634	
14	0	-110567	106307	1	-5.43	2.24	2	0,00	5,20	0,78	0,99	148506	

muratura

comb.	quota	N	M	p	es1	es2	ea	ev	e ver (cm)	Ft	Fl	Nu (daN)	
15	500	-70144	-874655	1	-5.45	2.22	2	0,00	5,24	0,78	0,87	130610	
15	200	-118828	-1007130	1	-5.45	2.22	2	0,00	2,62	0,88	0,91	153581	
15	0	-111279	116805	1	-5.45	2.22	2	0,00	5,24	0,78	0,99	148099	
16	500	-67764	-857045	1	-5.55	2.07	2	0,00	5,48	0,77	0,87	128835	
16	200	-115532	-1016534	1	-5.55	2.07	2	0,00	2,74	0,87	0,91	152240	
16	0	-108684	72741	1	-5.55	2.07	2	0,00	5,48	0,77	0,99	146967	
17	500	-69147	-882009	1	-5.58	2.03	2	0,00	5,55	0,77	0,87	128220	
17	200	-117352	-1022058	1	-5.58	2.03	2	0,00	2,78	0,87	0,91	152156	
17	0	-110110	93736	1	-5.58	2.03	2	0,00	5,55	0,77	0,99	146178	
18	500	-74192	-904634	1	-5.39	2.32	2	0,00	5,07	0,79	0,88	132061	
18	200	-124359	-1003390	1	-5.39	2.32	2	0,00	2,53	0,88	0,92	154820	
18	0	-115573	175790	1	-5.39	2.32	2	0,00	5,07	0,79	0,98	148533	
19	500	-74971	-889365	1	-5.27	2.47	2	0,00	4,80	0,80	0,88	134226	
19	200	-125541	-989867	1	-5.27	2.47	2	0,00	2,40	0,88	0,92	156003	
19	0	-116489	189961	1	-5.27	2.47	2	0,00	4,80	0,80	0,98	150216	
20	500	-75663	-901848	1	-5.29	2.45	2	0,00	4,84	0,79	0,88	133891	
20	200	-126451	-992628	1	-5.29	2.45	2	0,00	2,42	0,88	0,92	155934	
20	0	-117201	200458	1	-5.29	2.45	2	0,00	4,84	0,79	0,98	149815	

Verifica a taglio con rottura per fessurazione diagonale per azioni non sismiche Circ.617 C8.7.1.5 gammaM 3

comb.	quota	Vd	N	ftd	b	sigma0	Vu	c.s.	
SLU 1	250	-227	-81001	0.33	1.31	3.12	21222	93.53	
SLU 1	100	-220	-89814	0.33	1.31	3.46	22241	100	
SLU 2	250	-80	-82824	0.33	1.31	3.19	21437	100	
SLU 2	100	-73	-91642	0.33	1.31	3.53	22447	100	
SLU 3	250	294	-89845	0.33	1.31	3.47	22245	75.74	
SLU 3	100	301	-98676	0.33	1.31	3.81	23221	77.11	
SLU 4	250	307	-91031	0.33	1.31	3.51	22378	72.93	
SLU 4	100	314	-99862	0.33	1.31	3.85	23349	74.29	
SLU 5	250	380	-91942	0.33	1.31	3.55	22480	59.1	
SLU 5	100	388	-100776	0.33	1.31	3.89	23447	60.45	
SLU 6	250	149	-88640	0.33	1.31	3.42	22108	100	
SLU 6	100	156	-97468	0.33	1.31	3.76	23090	100	
SLU 7	250	296	-90463	0.33	1.31	3.49	22314	75.4	
SLU 7	100	304	-99296	0.33	1.31	3.83	23288	76.73	
SLU 8	250	670	-97484	0.33	1.31	3.76	23091	34.49	
SLU 8	100	678	-106330	0.33	1.31	4.1	24034	35.47	
SLU 9	250	683	-98670	0.33	1.31	3.81	23220	34.01	
SLU 9	100	691	-107516	0.33	1.31	4.15	24158	34.97	
SLU 10	250	756	-99581	0.33	1.31	3.84	23318	30.83	
SLU 10	100	764	-108430	0.33	1.31	4.18	24253	31.73	
SLU 11	250	-295	-105301	0.33	1.31	4.06	23927	81.11	
SLU 11	100	-286	-116758	0.33	1.31	4.5	25101	87.69	
SLU 12	250	-148	-107124	0.33	1.31	4.13	24117	100	
SLU 12	100	-139	-118586	0.33	1.31	4.57	25283	100	
SLU 13	250	226	-114145	0.33	1.31	4.4	24838	100	
SLU 13	100	235	-125620	0.33	1.31	4.85	25973	100	
SLU 14	250	239	-115331	0.33	1.31	4.45	24957	100	
SLU 14	100	248	-126806	0.33	1.31	4.89	26087	100	
SLU 15	250	312	-116242	0.33	1.31	4.48	25049	80.22	
SLU 15	100	322	-127720	0.33	1.31	4.93	26175	81.33	
SLU 16	250	81	-112940	0.33	1.31	4.36	24716	100	
SLU 16	100	90	-124412	0.33	1.31	4.8	25855	100	
SLU 17	250	228	-114763	0.33	1.31	4.43	24900	100	
SLU 17	100	237	-126240	0.33	1.31	4.87	26032	100	
SLU 18	250	602	-121784	0.33	1.31	4.7	25599	42.56	
SLU 18	100	612	-133274	0.33	1.31	5.14	26703	43.66	
SLU 19	250	615	-122970	0.33	1.31	4.74	25715	41.83	
SLU 19	100	625	-134460	0.33	1.31	5.19	26814	42.92	
SLU 20	250	688	-123882	0.33	1.31	4.78	25804	37.5	
SLU 20	100	698	-135374	0.33	1.31	5.22	26899	38.52	

Verifica a pressoflessione nel piano (7.8.2.2) e taglio con rottura per fessurazione diagonale (C8.7.1.5), gammaM = 2

comb.	quota	N	V par	V orto	M	M orto	N/(l*sp)	N/(l'*sp)	Mu	l'	fvd	Vt scorr.	Vt fess.diag.	
SLV 1	0	-69354	-339	1260	-58071	-77224	2.68	2.68	7580683	305	0.87	22513	24907	
SLV 1	500	-34964	350	-199	-533271	79433	1.35	1.35	4570566	305	0.6	15634	19005	
SLV 2	0	-67248	-884	1255	-405815	-76143	2.59	2.59	7438672	305	0.85	22091	24587	
SLV 2	500	-33404	-1213	-272	-483139	73210	1.29	1.29	4399089	305	0.59	15322	18693	
SLV 3	0	-77853	736	1489	852925	-127921	3	3	8097494	305	0.93	24212	26162	
SLV 3	500	-44741	3521	854	-437325	116842	1.73	1.73	5576253	305	0.68	17590	20854	
SLV 4	0	-75746	191	1484	505181	-126840	2.92	2.92	7977781	305	0.92	23791	25856	
SLV 4	500	-43181	1958	782	-387192	110619	1.67	1.67	5423778	305	0.67	17278	20570	
SLV 5	0	-67964	-1279	42	-1208056	52760	2.62	2.62	7487560	305	0.86	22234	24696	
SLV 5	500	-33395	-4301	222	-789953	98533	1.29	1.29	4398178	305	0.59	15321	18692	
SLV 6	0	-65618	-1886	35	-1595316	53964	2.53	2.53	7324999	305	0.84	21765	24336	
SLV 6	500	-31658	-6042	142	-734123	91602	1.22	1.22	4203629	305	0.58	14973	18338	
SLV 7	0	-96291	2306	805	1828596	-116232	3.71	3.71	8909472	305	1.08	27900	28695	
SLV 7	500	-65987	6269	3735	-470132	223231	2.55	2.55	7351023	305	0.84	21839	24393	
SLV 8	0	-93946	1698	799	1441335	-115028	3.62	3.62	8829685	305	1.06	27431	28385	
SLV 8	500	-64250	4527	3655	-414303	216300	2.48	2.48	7227007	305	0.83	21492	24123	
SLV 9	0	-75168	-1035	-774	-1299698	113530	2.9	2.9	7943939	305	0.91	23675	25772	
SLV 9	500	-41753	-5193	1634	-911578	152011	1.61	1.61	5281507	305	0.66	16992	20307	
SLV 10	0	-72822	-1642	-781	-1686958	114733	2.81	2.81	7802427	305	0.9	23206	25427	
SLV 10	500	-40015	-6935	1554	-855748	145080	1.54	1.54	5105045	305	0.64	16645	19982	
SLV 11	0	-103495	2549	-11	1736954	-55462	3.99	3.99	9111650	305	1.13	29341	29626	
SLV 11	500	-74345	5376	5147	-591758	276708	2.87	2.87	7895054	305	0.91	23511	25651	
SLV 12	0	-101150	1942	-17	1349694	-54258	3.9	3.9	9052913	305	1.11	28872	29326	
SLV 12	500	-72607	3635	5066	-535928	269777	2.8	2.8	7789125	305	0.89	23163	25395	
SLV 13	0	-93367	472	-1460	-363543	125342	3.6	3.6	8808957	305	1.05	27315	28308	
SLV 13	500	-62821	-2624	4507	-938688	257692	2.42	2.42	7122226	305	0.82	21206	23899	
SLV 14	0	-91261	-73	-1465	-711287	126423	3.52	3.52	8729953	305	1.04	26894	28026	
SLV 14	500	-61261	-4187	4434	-888556	251468	2.36	2.36	7004885	305	0.81	20894	23651	
SLV 15	0	-101866	1548	-1231	547453	74645	3.93	3.93	9071567	305	1.12	29015	29418	
SLV 15	500	-72599	547	5560	-842742	295101	2.8	2.8	7788615	305	0.89	23161	25394	
SLV 16	0	-99759	1002	-1236	199709	75726	3.85	3.85	9014861	305	1.1	28593	29147	
SLV 16	500	-71039	-1016	5488	-792610	288877	2.74	2.74	7690275	305	0.88	22849	25161	

Verifica a pressoflessione fuori piano D.M. 14-01-08 (N.T.C.)
quota 200 Ta 0 Wa 0.19 denominatore 8

comb.	fd	Sa	x	N	M	Mc	c.s.	
SLV 1	11	0.24	24.62	-70923	92898	2141113	23.05	
SLV 2	11	0.24	23.82	-68607	92898	2098777	22.59	
SLV 3	11	0.24	28.54	-82200	92898	2320660	24.98	
SLV 4	11	0.24	27.73	-79884	92898	2287391	24.62	
SLV 5	11	0.24	23.67	-68179	92898	2090747	22.51	
SLV 6	11	0.24	22.77	-65600	92898	2041026	21.97	
SLV 7	11	0.24	36.72	-105769	92898	2553356	27.49	
SLV 8	11	0.24	35.82	-103190	92898	2537291	27.31	
SLV 9	11	0.24	26.73	-76991	92898	2243217	24.15	
SLV 10	11	0.24	25.83	-74412	92898	2201386	23.7	
SLV 11	11	0.24	39.78	-114582	92898	2590827	27.89	
SLV 12	11	0.24	38.88	-112003	92898	2582651	27.8	
SLV 13	11	0.24	34.82	-100297	92898	2516523	27.09	
SLV 14	11	0.24	34.01	-97981	92898	2497803	26.89	
SLV 15	11	0.24	38.73	-111574	92898	2581071	27.78	
SLV 16	11	0.24	37.93	-109259	92898	2571418	27.68	

Verifica dei meccanismi locali di collasso con analisi cinematica lineare
accelerazione limite = 92,39; forza di aggancio al piano = 30

combinazione	N top	N base	V orto	alfa0	M*	e*	a0*	
SLV 1	-34964	-69354	-199	0.325	53.898	0.915	258	
SLV 2	-33404	-67248	-272	0.331	52.34	0.913	264	
SLV 3	-44741	-77853	854	0.276	63.707	0.925	216	
SLV 4	-43181	-75746	782	0.282	62.138	0.924	222	
SLV 5	-33395	-67964	222	0.333	52.332	0.913	265	
SLV 6	-31658	-65618	142	0.344	50.601	0.911	274	
SLV 7	-65987	-96291	3735	0.192	85.17	0.941	148	
SLV 8	-64250	-93946	3655	0.195	83.41	0.94	151	
SLV 9	-41753	-75168	1634	0.27	60.702	0.922	213	
SLV 10	-40015	-72822	1554	0.278	58.958	0.921	219	
SLV 11	-74345	-103495	5147	0.167	93.641	0.945	128	
SLV 12	-72607	-101150	5066	0.169	91.879	0.945	130	
SLV 13	-62821	-93367	4507	0.185	81.964	0.939	143	
SLV 14	-61261	-91261	4434	0.188	80.385	0.938	146	
SLV 15	-72599	-101866	5560	0.163	91.871	0.945	126	
SLV 16	-71039	-99759	5488	0.165	90.289	0.944	127	

Maschio 30
Maschio considerato membratura sismica secondaria
Dati geometrici

X ini.	Y ini.	X fin.	Y fin.	quota i.	quota.s	l	sp.	h netta	h ini.	h fin.	a
1847.5	1445	1847.5	1522.5	L1	L2	77.5	85	400	500	500	

Materiale: Muratura in pietrame consolidata con iniezioni LC1
f medio 30
tau 0.9
E 24000
G 8053.69
Fattore di confidenza 1.35

Verifica a pressoflessione per azioni non sismiche 4.5.6.2 D.M. 14-01-08 (N.T.C.) gammaM 3

comb.	quota	N	M	p	es1	es2	ea	ev	e ver (cm)	Ft	Fl	Nu (daN)	
1	500	-11544	10320	1	-6.21	1.87	2	0,00	6,34	0,74	0,96	34757	
1	200	-17444	-81499	1	-6.21	1.87	2	0,00	3,17	0,86	0,81	33886	
1	0	-19000	5234	1	-6.21	1.87	2	0,00	6,34	0,74	0,99	35655	
2	500	-11906	9470	1	-6.25	1.81	2	0,00	6,44	0,74	0,97	34737	
2	200	-17874	-85001	1	-6.25	1.81	2	0,00	3,22	0,85	0,81	33678	
2	0	-19372	3973	1	-6.25	1.81	2	0,00	6,44	0,74	0,99	35589	
3	500	-13140	5104	1	-5.97	2.25	2	0,00	5,72	0,76	0,98	36597	
3	200	-19376	-100145	1	-5.97	2.25	2	0,00	2,86	0,87	0,79	33497	
3	0	-20647	-2036	1	-5.97	2.25	2	0,00	5,72	0,76	1,00	37030	
4	500	-13307	4083	1	-5.82	2.48	2	0,00	5,34	0,78	0,99	37388	
4	200	-19590	-103133	1	-5.82	2.48	2	0,00	2,67	0,87	0,79	33601	
4	0	-20822	-3350	1	-5.82	2.48	2	0,00	5,34	0,78	0,99	37610	
5	500	-13488	3658	1	-5.84	2.45	2	0,00	5,39	0,77	0,99	37344	
5	200	-19805	-104884	1	-5.84	2.45	2	0,00	2,70	0,87	0,79	33508	
5	0	-21008	-3981	1	-5.84	2.45	2	0,00	5,39	0,77	0,99	37469	
6	500	-12996	5904	1	-5.97	2.25	2	0,00	5,73	0,76	0,98	36482	
6	200	-19194	-97786	1	-5.97	2.25	2	0,00	2,86	0,87	0,79	33616	
6	0	-20496	-981	1	-5.97	2.25	2	0,00	5,73	0,76	1,00	37090	
7	500	-13358	5053	1	-6.01	2.19	2	0,00	5,83	0,76	0,98	36418	
7	200	-19624	-101289	1	-6.01	2.19	2	0,00	2,91	0,86	0,79	33431	
7	0	-20868	-2243	1	-6.01	2.19	2	0,00	5,83	0,76	1,00	36821	
8	500	-14592	687	1	-5.78	2.55	2	0,00	5,23	0,78	1,00	37980	
8	200	-21126	-116432	1	-5.78	2.55	2	0,00	2,61	0,88	0,78	33253	
8	0	-22143	-8252	1	-5.78	2.55	2	0,00	5,23	0,78	0,98	37481	
9	500	-14760	-334	1	-5.65	2.75	2	0,00	4,89	0,79	1,00	38618	
9	200	-21340	-119420	1	-5.65	2.75	2	0,00	2,45	0,88	0,77	33340	
9	0	-22318	-9566	1	-5.65	2.75	2	0,00	4,89	0,79	0,98	37986	
10	500	-14940	-759	1	-5.67	2.72	2	0,00	4,95	0,79	1,00	38475	
10	200	-21555	-121171	1	-5.67	2.72	2	0,00	2,47	0,88	0,77	33258	
10	0	-22504	-10197	1	-5.67	2.72	2	0,00	4,95	0,79	0,98	37851	
11	500	-15007	13416	1	-6.21	1.87	2	0,00	6,34	0,74	0,96	34757	
11	200	-22677	-105949	1	-6.21	1.87	2	0,00	3,17	0,86	0,81	33886	
11	0	-24700	6805	1	-6.21	1.87	2	0,00	6,34	0,74	0,99	35655	
12	500	-15369	12566	1	-6.24	1.83	2	0,00	6,42	0,74	0,97	34741	
12	200	-23107	-109451	1	-6.24	1.83	2	0,00	3,21	0,85	0,81	33725	
12	0	-25072	5543	1	-6.24	1.83	2	0,00	6,42	0,74	0,99	35604	
13	500	-16603	8200	1	-6.02	2.17	2	0,00	5,85	0,76	0,98	36209	
13	200	-24609	-124595	1	-6.02	2.17	2	0,00	2,92	0,86	0,80	33584	
13	0	-26347	-466	1	-6.02	2.17	2	0,00	5,85	0,76	1,00	36917	
14	500	-16770	7179	1	-5.9	2.35	2	0,00	5,55	0,77	0,98	36838	

muratura

comb.	quota	N	M	p	es1	es2	ea	ev	e ver (cm)	Ft	Fl	Nu (daN)	
14	200	-24823	-127582	1	-5.9	2.35	2	0,00	2,77	0,87	0,79	33667	
14	0	-26522	-1780	1	-5.9	2.35	2	0,00	5,55	0,77	1,00	37382	
15	500	-16951	6754	1	-5.92	2.33	2	0,00	5,59	0,77	0,98	36809	
15	200	-25038	-129334	1	-5.92	2.33	2	0,00	2,79	0,87	0,79	33594	
15	0	-26708	-2411	1	-5.92	2.33	2	0,00	5,59	0,77	1,00	37273	
16	500	-16460	9000	1	-6.02	2.17	2	0,00	5,86	0,76	0,98	36116	
16	200	-24427	-122236	1	-6.02	2.17	2	0,00	2,93	0,86	0,80	33677	
16	0	-26196	589	1	-6.02	2.17	2	0,00	5,86	0,76	1,00	36895	
17	500	-16821	8149	1	-6.05	2.12	2	0,00	5,93	0,75	0,98	36073	
17	200	-24857	-125739	1	-6.05	2.12	2	0,00	2,97	0,86	0,80	33530	
17	0	-26568	-673	1	-6.05	2.12	2	0,00	5,93	0,75	1,00	36753	
18	500	-18056	3783	1	-5.86	2.42	2	0,00	5,44	0,77	0,99	37351	
18	200	-26359	-140882	1	-5.86	2.42	2	0,00	2,72	0,87	0,78	33390	
18	0	-27843	-6682	1	-5.86	2.42	2	0,00	5,44	0,77	0,99	37305	
19	500	-18223	2762	1	-5.75	2.58	2	0,00	5,17	0,78	0,99	37926	
19	200	-26573	-143870	1	-5.75	2.58	2	0,00	2,58	0,88	0,78	33463	
19	0	-28018	-7996	1	-5.75	2.58	2	0,00	5,17	0,78	0,99	37721	
20	500	-18404	2337	1	-5.77	2.56	2	0,00	5,21	0,78	0,99	37889	
20	200	-26788	-145621	1	-5.77	2.56	2	0,00	2,61	0,88	0,78	33395	
20	0	-28204	-8627	1	-5.77	2.56	2	0,00	5,21	0,78	0,99	37615	

Verifica a taglio con rottura per fessurazione diagonale per azioni non sismiche Circ.617 C8.7.1.5 gammaM 3

comb.	quota	Vd	N	ftd	b	sigma0	Vu	c.s.	
SLU 1	250	14	-16763	0.33	1.5	2.54	4301	100	
SLU 1	100	-39	-19119	0.33	1.5	2.9	4561	100	
SLU 2	250	14	-17193	0.33	1.5	2.61	4350	100	
SLU 2	100	-39	-19549	0.33	1.5	2.97	4607	100	
SLU 3	250	15	-18694	0.33	1.5	2.84	4515	100	
SLU 3	100	-41	-21043	0.33	1.5	3.19	4762	100	
SLU 4	250	15	-18908	0.33	1.5	2.87	4538	100	
SLU 4	100	-42	-21253	0.33	1.5	3.23	4784	100	
SLU 5	250	16	-19123	0.33	1.5	2.9	4561	100	
SLU 5	100	-42	-21468	0.33	1.5	3.26	4806	100	
SLU 6	250	15	-18512	0.33	1.5	2.81	4495	100	
SLU 6	100	-41	-20863	0.33	1.5	3.17	4744	100	
SLU 7	250	16	-18942	0.33	1.5	2.88	4542	100	
SLU 7	100	-42	-21293	0.33	1.5	3.23	4788	100	
SLU 8	250	17	-20443	0.33	1.5	3.1	4700	100	
SLU 8	100	-43	-22786	0.33	1.5	3.46	4938	100	
SLU 9	250	17	-20656	0.33	1.5	3.14	4723	100	
SLU 9	100	-44	-22996	0.33	1.5	3.49	4958	100	
SLU 10	250	17	-20871	0.33	1.5	3.17	4745	100	
SLU 10	100	-44	-23211	0.33	1.5	3.52	4980	100	
SLU 11	250	18	-21792	0.33	1.5	3.31	4838	100	
SLU 11	100	-51	-24855	0.33	1.5	3.77	5138	100	
SLU 12	250	18	-22222	0.33	1.5	3.37	4882	100	
SLU 12	100	-51	-25285	0.33	1.5	3.84	5179	100	
SLU 13	250	20	-23723	0.33	1.5	3.6	5029	100	
SLU 13	100	-53	-26778	0.33	1.5	4.07	5318	100	
SLU 14	250	19	-23937	0.33	1.5	3.63	5050	100	
SLU 14	100	-53	-26989	0.33	1.5	4.1	5337	99.79	
SLU 15	250	20	-24152	0.33	1.5	3.67	5071	100	
SLU 15	100	-54	-27204	0.33	1.5	4.13	5356	99.7	
SLU 16	250	19	-23541	0.33	1.5	3.57	5012	100	
SLU 16	100	-53	-26599	0.33	1.5	4.04	5301	100	
SLU 17	250	20	-23971	0.33	1.5	3.64	5053	100	
SLU 17	100	-53	-27028	0.33	1.5	4.1	5340	100	
SLU 18	250	21	-25472	0.33	1.5	3.87	5196	100	
SLU 18	100	-55	-28522	0.33	1.5	4.33	5475	99.22	
SLU 19	250	21	-25685	0.33	1.5	3.9	5216	100	
SLU 19	100	-56	-28732	0.33	1.5	4.36	5494	98.93	
SLU 20	250	21	-25900	0.33	1.5	3.93	5236	100	
SLU 20	100	-56	-28947	0.33	1.5	4.39	5513	98.83	

Verifica a pressoflessione fuori piano D.M. 14-01-08 (N.T.C.)
quota 200 Ta 0.04 Wa 0.19 denominatore 8

comb.	fd	Sa	x	N	M	Mc	c.s.	
SLV 1	11	0.3	25.96	-19001	28562	560911	19.64	
SLV 2	11	0.3	25.22	-18459	28562	551752	19.32	
SLV 3	11	0.3	28.04	-20522	28562	584490	20.46	
SLV 4	11	0.3	27.3	-19980	28562	576457	20.18	
SLV 5	11	0.3	23.15	-16941	28562	523948	18.34	
SLV 6	11	0.3	22.32	-16338	28562	512027	17.93	
SLV 7	11	0.3	30.07	-22012	28562	604518	21.16	
SLV 8	11	0.3	29.25	-21408	28562	596774	20.89	
SLV 9	11	0.3	22.78	-16671	28562	518661	18.16	
SLV 10	11	0.3	21.95	-16068	28562	506517	17.73	
SLV 11	11	0.3	29.7	-21741	28562	601105	21.05	
SLV 12	11	0.3	28.88	-21138	28562	593139	20.77	
SLV 13	11	0.3	24.73	-18099	28562	545436	19.1	
SLV 14	11	0.3	23.99	-17557	28562	535610	18.75	
SLV 15	11	0.3	26.81	-19620	28562	570889	19.99	
SLV 16	11	0.3	26.07	-19078	28562	562189	19.68	

Verifica dei meccanismi locali di collasso con analisi cinematica lineare
accelerazione limite = 92,39; forza di aggancio al piano = 30

combinazione	N top	N base	V orto	alfa0	M*	e*	a0*	
SLV 1	-12844	-20323	1233	0.195	17.675	0.93	152	
SLV 2	-12575	-19978	1218	0.198	17.404	0.929	155	
SLV 3	-13601	-21280	1263	0.189	18.438	0.932	148	
SLV 4	-13332	-20935	1248	0.192	18.167	0.932	149	
SLV 5	-11821	-19039	1183	0.205	16.643	0.927	161	
SLV 6	-11521	-18655	1166	0.208	16.341	0.926	163	
SLV 7	-14342	-22229	1281	0.185	19.188	0.935	144	
SLV 8	-14043	-21845	1264	0.187	18.885	0.934	146	
SLV 9	-11687	-18878	1169	0.207	16.508	0.926	162	
SLV 10	-11387	-18494	1152	0.21	16.207	0.925	165	
SLV 11	-14209	-22069	1267	0.186	19.053	0.934	145	

combinazione	N top	N base	V orto	alfa0	M*	e*	a0*	
SLV 12	-13909	-21684	1250	0.189	18.75	0.933	147	
SLV 13	-12398	-19788	1186	0.201	17.225	0.929	157	
SLV 14	-12129	-19443	1171	0.204	16.954	0.928	159	
SLV 15	-13155	-20745	1215	0.195	17.988	0.931	152	
SLV 16	-12886	-20400	1200	0.197	17.717	0.93	154	

Maschio 31
Maschio considerato membratura sismica secondaria
Dati geometrici

X ini.	Y ini.	X fin.	Y fin.	quota i.	quota.s	l	sp.	h netta	h ini.	h fin.	a
135	240	135	135	L2	L3	105	70	460	560	560	

Materiale: Muratura in pietrame consolidata con iniezioni LC1
f medio 30
tau 0.9
E 24000
G 8053.69
Fattore di confidenza 1.35

Verifica a pressoflessione per azioni non sismiche 4.5.6.2 D.M. 14-01-08 (N.T.C.) gammaM 3

comb.	quota	N	M	p	es1	es2	ea	ev	e ver (cm)	Ft	Fl	Nu (daN)	
1	1060	-1274	32270	1	0	11.67	2.3	0,00	13,97	0,45	0,46	11244	
1	730	-10564	-178371	1	0	11.67	2.3	0,00	6,98	0,65	0,60	21155	
1	500	-10999	-74821	1	0	11.67	2.3	0,00	13,97	0,45	0,80	19678	
2	1060	-1494	33303	1	0	11.67	2.3	0,00	13,97	0,45	0,51	12527	
2	730	-10966	-185577	1	0	11.67	2.3	0,00	6,98	0,65	0,60	21132	
2	500	-11261	-77986	1	0	11.67	2.3	0,00	13,97	0,45	0,79	19588	
3	1060	-1802	34762	1	0	11.67	2.3	0,00	13,97	0,45	0,56	13793	
3	730	-11529	-195670	1	0	11.67	2.3	0,00	6,98	0,65	0,60	21103	
3	500	-11630	-82315	1	0	11.67	2.3	0,00	13,97	0,45	0,79	19477	
4	1060	-1714	34354	1	0	11.67	2.3	0,00	13,97	0,45	0,55	13474	
4	730	-11369	-192789	1	0	11.67	2.3	0,00	6,98	0,65	0,60	21112	
4	500	-11526	-81006	1	0	11.67	2.3	0,00	13,97	0,45	0,79	19513	
5	1060	-1824	34871	1	0	11.67	2.3	0,00	13,97	0,45	0,56	13866	
5	730	-11570	-196392	1	0	11.67	2.3	0,00	6,98	0,65	0,60	21101	
5	500	-11657	-82588	1	0	11.67	2.3	0,00	13,97	0,45	0,79	19472	
6	1060	-1892	35258	1	0	10.19	2.3	0,00	12,49	0,50	0,57	15378	
6	730	-11691	-198556	1	0	10.19	2.3	0,00	6,24	0,67	0,60	21756	
6	500	-11732	-83809	1	0	10.19	2.3	0,00	12,49	0,50	0,79	21234	
7	1060	-2111	36291	1	0	10.16	2.3	0,00	12,46	0,50	0,60	16074	
7	730	-12093	-205762	1	0	10.16	2.3	0,00	6,23	0,67	0,60	21749	
7	500	-11993	-86973	1	0	10.16	2.3	0,00	12,46	0,50	0,78	21181	
8	1060	-2419	37750	1	0	10.13	2.3	0,00	12,43	0,50	0,62	16834	
8	730	-12656	-215854	1	0	10.13	2.3	0,00	6,22	0,67	0,60	21737	
8	500	-12363	-91302	1	0	10.13	2.3	0,00	12,43	0,50	0,78	21109	
9	1060	-2331	37342	1	0	10.14	2.3	0,00	12,44	0,50	0,62	16634	
9	730	-12496	-212974	1	0	10.14	2.3	0,00	6,22	0,67	0,60	21740	
9	500	-12259	-89993	1	0	10.14	2.3	0,00	12,44	0,50	0,78	21134	
10	1060	-2441	37858	1	0	10.13	2.3	0,00	12,43	0,50	0,62	16880	
10	730	-12697	-216577	1	0	10.13	2.3	0,00	6,22	0,67	0,60	21736	
10	500	-12390	-91575	1	0	10.13	2.3	0,00	12,43	0,50	0,78	21106	
11	1060	-1657	41951	1	0	11.67	2.3	0,00	13,97	0,45	0,46	11244	
11	730	-13733	-231882	1	0	11.67	2.3	0,00	6,98	0,65	0,60	21155	
11	500	-14299	-97268	1	0	11.67	2.3	0,00	13,97	0,45	0,80	19678	
12	1060	-1876	42984	1	0	11.67	2.3	0,00	13,97	0,45	0,50	12266	
12	730	-14135	-239088	1	0	11.67	2.3	0,00	6,98	0,65	0,60	21137	
12	500	-14561	-100432	1	0	11.67	2.3	0,00	13,97	0,45	0,80	19609	
13	1060	-2184	44443	1	0	11.67	2.3	0,00	13,97	0,45	0,54	13347	
13	730	-14698	-249181	1	0	11.67	2.3	0,00	6,98	0,65	0,60	21114	
13	500	-14930	-104761	1	0	11.67	2.3	0,00	13,97	0,45	0,79	19521	
14	1060	-2096	44035	1	0	11.67	2.3	0,00	13,97	0,45	0,53	13068	
14	730	-14538	-246300	1	0	11.67	2.3	0,00	6,98	0,65	0,60	21121	
14	500	-14826	-103452	1	0	11.67	2.3	0,00	13,97	0,45	0,79	19550	
15	1060	-2206	44552	1	0	11.67	2.3	0,00	13,97	0,45	0,54	13411	
15	730	-14739	-249903	1	0	11.67	2.3	0,00	6,98	0,65	0,60	21113	
15	500	-14957	-105035	1	0	11.67	2.3	0,00	13,97	0,45	0,79	19517	
16	1060	-2274	44939	1	0	10.59	2.3	0,00	12,89	0,48	0,55	14518	
16	730	-14860	-252067	1	0	10.59	2.3	0,00	6,44	0,66	0,60	21591	
16	500	-15031	-106255	1	0	10.59	2.3	0,00	12,89	0,48	0,79	20806	
17	1060	-2494	45972	1	0	10.53	2.3	0,00	12,83	0,49	0,57	15170	
17	730	-15262	-259273	1	0	10.53	2.3	0,00	6,41	0,66	0,60	21602	
17	500	-15293	-109420	1	0	10.53	2.3	0,00	12,83	0,49	0,79	20810	
18	1060	-2801	47431	1	0	10.46	2.3	0,00	12,76	0,49	0,60	15911	
18	730	-15825	-269366	1	0	10.46	2.3	0,00	6,38	0,66	0,60	21610	
18	500	-15662	-113749	1	0	10.46	2.3	0,00	12,76	0,49	0,78	20805	
19	1060	-2713	47023	1	0	10.48	2.3	0,00	12,78	0,49	0,59	15713	
19	730	-15665	-266485	1	0	10.48	2.3	0,00	6,39	0,66	0,60	21608	
19	500	-15559	-112440	1	0	10.48	2.3	0,00	12,78	0,49	0,79	20811	
20	1060	-2823	47539	1	0	10.46	2.3	0,00	12,76	0,49	0,60	15957	
20	730	-15866	-270088	1	0	10.46	2.3	0,00	6,38	0,66	0,60	21611	
20	500	-15689	-114022	1	0	10.46	2.3	0,00	12,76	0,49	0,78	20806	

Verifica a taglio con rottura per fessurazione diagonale per azioni non sismiche Circ.617 C8.7.1.5 gammaM 3

comb.	quota	Vd	N	ftd	b	sigma0	Vu	c.s.	
SLU 1	750	-37	-10725	0.33	1.5	1.46	3788	100	
SLU 1	600	2	-12581	0.33	1.5	1.71	4046	100	
SLU 2	750	-37	-11159	0.33	1.5	1.52	3850	100	
SLU 2	600	2	-12989	0.33	1.5	1.77	4100	100	
SLU 3	750	-39	-11773	0.33	1.5	1.6	3935	100	
SLU 3	600	2	-13560	0.33	1.5	1.84	4175	100	
SLU 4	750	-38	-11601	0.33	1.5	1.58	3912	100	
SLU 4	600	2	-13396	0.33	1.5	1.82	4154	100	
SLU 5	750	-39	-11818	0.33	1.5	1.61	3942	100	
SLU 5	600	2	-13600	0.33	1.5	1.85	4181	100	

muratura

comb.	quota	Vd	N	ftd	b	sigma0	Vu	c.s.	
SLU 6	750	-39	-11945	0.33	1.5	1.63	3959	100	
SLU 6	600	2	-13726	0.33	1.5	1.87	4197	100	
SLU 7	750	-40	-12379	0.33	1.5	1.68	4018	100	
SLU 7	600	2	-14135	0.33	1.5	1.92	4250	100	
SLU 8	750	-41	-12993	0.33	1.5	1.77	4101	100	
SLU 8	600	2	-14706	0.33	1.5	2	4322	100	
SLU 9	750	-40	-12821	0.33	1.5	1.74	4078	100	
SLU 9	600	2	-14541	0.33	1.5	1.98	4301	100	
SLU 10	750	-41	-13038	0.33	1.5	1.77	4107	100	
SLU 10	600	2	-14746	0.33	1.5	2.01	4327	100	
SLU 11	750	-48	-13942	0.33	1.5	1.9	4225	88.35	
SLU 11	600	2	-16355	0.33	1.5	2.23	4525	100	
SLU 12	750	-49	-14377	0.33	1.5	1.96	4280	88.22	
SLU 12	600	2	-16764	0.33	1.5	2.28	4574	100	
SLU 13	750	-50	-14990	0.33	1.5	2.04	4358	87.86	
SLU 13	600	2	-17334	0.33	1.5	2.36	4641	100	
SLU 14	750	-49	-14819	0.33	1.5	2.02	4336	87.85	
SLU 14	600	2	-17170	0.33	1.5	2.34	4622	100	
SLU 15	750	-50	-15036	0.33	1.5	2.05	4364	87.78	
SLU 15	600	2	-17374	0.33	1.5	2.36	4646	100	
SLU 16	750	-50	-15162	0.33	1.5	2.06	4379	87.88	
SLU 16	600	2	-17501	0.33	1.5	2.38	4661	100	
SLU 17	750	-51	-15597	0.33	1.5	2.12	4433	87.72	
SLU 17	600	2	-17909	0.33	1.5	2.44	4708	100	
SLU 18	750	-52	-16210	0.33	1.5	2.21	4508	87.34	
SLU 18	600	2	-18480	0.33	1.5	2.51	4774	100	
SLU 19	750	-51	-16039	0.33	1.5	2.18	4487	87.34	
SLU 19	600	2	-18316	0.33	1.5	2.49	4755	100	
SLU 20	750	-52	-16256	0.33	1.5	2.21	4513	87.26	
SLU 20	600	2	-18520	0.33	1.5	2.52	4778	100	

Verifica a pressoflessione fuori piano D.M. 14-01-08 (N.T.C.)
quota 730 Ta 0.06 Wa 0.15 denominatore 8

comb.	fd	Sa	x	N	M	Mc	c.s.	
SLV 1	11	0.52	11.65	-11556	73493	337137	4.59	
SLV 2	11	0.52	11.67	-11575	73493	337565	4.59	
SLV 3	11	0.52	11.67	-11571	73493	337489	4.59	
SLV 4	11	0.52	11.69	-11590	73493	337917	4.6	
SLV 5	11	0.52	11.57	-11470	73493	335115	4.56	
SLV 6	11	0.52	11.59	-11490	73493	335593	4.57	
SLV 7	11	0.52	11.62	-11520	73493	336294	4.58	
SLV 8	11	0.52	11.64	-11541	73493	336771	4.58	
SLV 9	11	0.52	11.51	-11412	73493	333752	4.54	
SLV 10	11	0.52	11.53	-11432	73493	334231	4.55	
SLV 11	11	0.52	11.56	-11462	73493	334933	4.56	
SLV 12	11	0.52	11.58	-11483	73493	335412	4.56	
SLV 13	11	0.52	11.46	-11363	73493	332597	4.53	
SLV 14	11	0.52	11.48	-11381	73493	333028	4.53	
SLV 15	11	0.52	11.47	-11378	73493	332952	4.53	
SLV 16	11	0.52	11.49	-11396	73493	333383	4.54	

Verifica dei meccanismi locali di collasso con analisi cinematica lineare
accelerazione limite = 196,01; forza di aggancio al piano = 30

combinazione	N top	N base	V orto	alfa0	M*	e*	a0*	
SLV 1	-1799	-11844	76	0.684	8.484	0.901	552	
SLV 2	-1802	-11900	76	0.684	8.486	0.901	552	
SLV 3	-1788	-11783	106	0.68	8.476	0.901	548	
SLV 4	-1791	-11840	106	0.68	8.478	0.901	548	
SLV 5	-1797	-11737	-20	0.695	8.482	0.901	560	
SLV 6	-1799	-11799	-19	0.695	8.484	0.901	560	
SLV 7	-1761	-11536	82	0.688	8.455	0.902	554	
SLV 8	-1764	-11598	82	0.687	8.457	0.902	554	
SLV 9	-1784	-11587	-71	0.687	8.472	0.901	554	
SLV 10	-1787	-11650	-71	0.687	8.475	0.901	554	
SLV 11	-1748	-11386	30	0.698	8.446	0.902	563	
SLV 12	-1751	-11449	31	0.698	8.448	0.902	562	
SLV 13	-1756	-11346	-96	0.686	8.452	0.902	552	
SLV 14	-1759	-11402	-95	0.685	8.454	0.902	552	
SLV 15	-1746	-11286	-65	0.692	8.444	0.902	558	
SLV 16	-1748	-11342	-65	0.692	8.446	0.902	558	

Maschio 32
Maschio considerato membratura sismica secondaria
Dati geometrici

X ini.	Y ini.	X fin.	Y fin.	quota i.	quota.s	l	sp.	h netta	h ini.	h fin.	a
135	460	135	360	L2	L3	100	70	460	560	560	

Materiale: Muratura in pietrame consolidata con iniezioni LC1
f medio 30
tau 0.9
E 24000
G 8053.69
Fattore di confidenza 1.35

Verifica a pressoflessione per azioni non sismiche 4.5.6.2 D.M. 14-01-08 (N.T.C.) gammaM 3

comb.	quota	N	M	p	es1	es2	ea	ev	e ver (cm)	Ft	Fl	Nu (daN)	
1	1060	-1925	-26604	1	0	7.92	2.3	0,00	10,22	0,56	0,64	18568	
1	730	-10796	116259	1	0	7.92	2.3	0,00	5,11	0,71	0,70	25648	
1	500	-10142	60204	1	0	7.92	2.3	0,00	10,22	0,56	0,81	23591	
2	1060	-2165	-27477	1	0	8	2.3	0,00	10,30	0,56	0,66	19075	
2	730	-11212	120858	1	0	8	2.3	0,00	5,15	0,71	0,70	25574	

comb.	quota	N	M	p	es1	es2	ea	ev	e ver (cm)	Ft	Fl	Nu (daN)	
2	500	-10376	62170	1	0	8	2.3	0,00	10,30	0,56	0,81	23444	
3	1060	-2500	-28730	1	0	8.09	2.3	0,00	10,39	0,55	0,68	19611	
3	730	-11793	127326	1	0	8.09	2.3	0,00	5,19	0,71	0,70	25491	
3	500	-10703	64948	1	0	8.09	2.3	0,00	10,39	0,55	0,81	23271	
4	1060	-2405	-28394	1	0	8.07	2.3	0,00	10,37	0,55	0,68	19470	
4	730	-11626	125500	1	0	8.07	2.3	0,00	5,18	0,71	0,70	25511	
4	500	-10610	64173	1	0	8.07	2.3	0,00	10,37	0,55	0,81	23316	
5	1060	-2524	-28830	1	0	8.09	2.3	0,00	10,39	0,55	0,68	19642	
5	730	-11834	127799	1	0	8.09	2.3	0,00	5,20	0,71	0,70	25486	
5	500	-10727	65156	1	0	8.09	2.3	0,00	10,39	0,55	0,81	23259	
6	1060	-2597	-29258	1	0	7.07	2.3	0,00	9,37	0,58	0,69	20723	
6	730	-11954	129631	1	0	7.07	2.3	0,00	4,68	0,73	0,69	26269	
6	500	-10801	65915	1	0	7.07	2.3	0,00	9,37	0,58	0,81	24415	
7	1060	-2836	-30131	1	0	7.2	2.3	0,00	9,50	0,58	0,70	20938	
7	730	-12370	134229	1	0	7.2	2.3	0,00	4,75	0,73	0,69	26157	
7	500	-11034	67881	1	0	7.2	2.3	0,00	9,50	0,58	0,81	24212	
8	1060	-3172	-31384	1	0	7.36	2.3	0,00	9,66	0,57	0,71	21174	
8	730	-12951	140698	1	0	7.36	2.3	0,00	4,83	0,72	0,69	26025	
8	500	-11361	70659	1	0	7.36	2.3	0,00	9,66	0,57	0,81	23972	
9	1060	-3076	-31048	1	0	7.32	2.3	0,00	9,62	0,57	0,71	21109	
9	730	-12784	138871	1	0	7.32	2.3	0,00	4,81	0,72	0,69	26059	
9	500	-11268	69884	1	0	7.32	2.3	0,00	9,62	0,57	0,81	24035	
10	1060	-3196	-31484	1	0	7.37	2.3	0,00	9,67	0,57	0,71	21187	
10	730	-12992	141171	1	0	7.37	2.3	0,00	4,83	0,72	0,69	26016	
10	500	-11385	70867	1	0	7.37	2.3	0,00	9,67	0,57	0,81	23956	
11	1060	-2503	-34585	1	0	7.92	2.3	0,00	10,22	0,56	0,64	18568	
11	730	-14035	151137	1	0	7.92	2.3	0,00	5,11	0,71	0,70	25648	
11	500	-13185	78265	1	0	7.92	2.3	0,00	10,22	0,56	0,81	23591	
12	1060	-2743	-35458	1	0	7.98	2.3	0,00	10,28	0,56	0,66	18968	
12	730	-14451	155735	1	0	7.98	2.3	0,00	5,14	0,71	0,70	25590	
12	500	-13419	80231	1	0	7.98	2.3	0,00	10,28	0,56	0,81	23475	
13	1060	-3078	-36711	1	0	8.06	2.3	0,00	10,36	0,55	0,68	19417	
13	730	-15032	162204	1	0	8.06	2.3	0,00	5,18	0,71	0,70	25521	
13	500	-13746	83009	1	0	8.06	2.3	0,00	10,36	0,55	0,81	23335	
14	1060	-2982	-36375	1	0	8.04	2.3	0,00	10,34	0,56	0,67	19296	
14	730	-14865	160378	1	0	8.04	2.3	0,00	5,17	0,71	0,70	25538	
14	500	-13653	82234	1	0	8.04	2.3	0,00	10,34	0,56	0,81	23372	
15	1060	-3102	-36811	1	0	8.06	2.3	0,00	10,36	0,55	0,68	19443	
15	730	-15073	162677	1	0	8.06	2.3	0,00	5,18	0,71	0,70	25516	
15	500	-13770	83217	1	0	8.06	2.3	0,00	10,36	0,55	0,81	23325	
16	1060	-3174	-37239	1	0	7.22	2.3	0,00	9,52	0,58	0,68	20323	
16	730	-15192	164509	1	0	7.22	2.3	0,00	4,76	0,73	0,70	26158	
16	500	-13843	83976	1	0	7.22	2.3	0,00	9,52	0,58	0,81	24272	
17	1060	-3414	-38113	1	0	7.32	2.3	0,00	9,62	0,57	0,69	20529	
17	730	-15609	169107	1	0	7.32	2.3	0,00	4,81	0,72	0,69	26073	
17	500	-14077	85942	1	0	7.32	2.3	0,00	9,62	0,57	0,81	24118	
18	1060	-3749	-39365	1	0	7.45	2.3	0,00	9,75	0,57	0,70	20765	
18	730	-16190	175575	1	0	7.45	2.3	0,00	4,87	0,72	0,69	25970	
18	500	-14404	88720	1	0	7.45	2.3	0,00	9,75	0,57	0,81	23929	
19	1060	-3654	-39029	1	0	7.41	2.3	0,00	9,71	0,57	0,70	20700	
19	730	-16023	173749	1	0	7.41	2.3	0,00	4,86	0,72	0,69	25997	
19	500	-14311	87945	1	0	7.41	2.3	0,00	9,71	0,57	0,81	23979	
20	1060	-3773	-39466	1	0	7.45	2.3	0,00	9,75	0,57	0,70	20779	
20	730	-16231	176048	1	0	7.45	2.3	0,00	4,88	0,72	0,69	25963	
20	500	-14428	88928	1	0	7.45	2.3	0,00	9,75	0,57	0,81	23916	

Verifica a taglio con rottura per fessurazione diagonale per azioni non sismiche Circ.617 C8.7.1.5 gammaM 3

comb.	quota	Vd	N	ftd	b	sigma0	Vu	c.s.	
SLU 1	750	-2	-10220	0.33	1.5	1.46	3608	100	
SLU 1	600	-2	-12528	0.33	1.5	1.79	3926	100	
SLU 2	750	-2	-10636	0.33	1.5	1.52	3667	100	
SLU 2	600	-2	-12944	0.33	1.5	1.85	3980	100	
SLU 3	750	-2	-11217	0.33	1.5	1.6	3749	100	
SLU 3	600	-2	-13525	0.33	1.5	1.93	4055	100	
SLU 4	750	-2	-11050	0.33	1.5	1.58	3725	100	
SLU 4	600	-2	-13358	0.33	1.5	1.91	4034	100	
SLU 5	750	-2	-11258	0.33	1.5	1.61	3754	100	
SLU 5	600	-2	-13566	0.33	1.5	1.94	4061	100	
SLU 6	750	-2	-11377	0.33	1.5	1.63	3771	100	
SLU 6	600	-2	-13686	0.33	1.5	1.96	4076	100	
SLU 7	750	-2	-11794	0.33	1.5	1.68	3828	100	
SLU 7	600	-2	-14102	0.33	1.5	2.01	4128	100	
SLU 8	750	-3	-12375	0.33	1.5	1.77	3906	100	
SLU 8	600	-3	-14683	0.33	1.5	2.1	4201	100	
SLU 9	750	-2	-12208	0.33	1.5	1.74	3883	100	
SLU 9	600	-2	-14516	0.33	1.5	2.07	4180	100	
SLU 10	750	-3	-12416	0.33	1.5	1.77	3911	100	
SLU 10	600	-3	-14724	0.33	1.5	2.1	4206	100	
SLU 11	750	-3	-13285	0.33	1.5	1.9	4025	100	
SLU 11	600	-3	-16286	0.33	1.5	2.33	4394	100	
SLU 12	750	-3	-13702	0.33	1.5	1.96	4078	100	
SLU 12	600	-3	-16702	0.33	1.5	2.39	4443	100	
SLU 13	750	-3	-14283	0.33	1.5	2.04	4151	100	
SLU 13	600	-3	-17283	0.33	1.5	2.47	4510	100	
SLU 14	750	-3	-14116	0.33	1.5	2.02	4130	100	
SLU 14	600	-3	-17116	0.33	1.5	2.45	4491	100	
SLU 15	750	-3	-14324	0.33	1.5	2.05	4156	100	
SLU 15	600	-3	-17325	0.33	1.5	2.47	4515	100	
SLU 16	750	-3	-14443	0.33	1.5	2.06	4171	100	
SLU 16	600	-3	-17444	0.33	1.5	2.49	4529	100	
SLU 17	750	-3	-14859	0.33	1.5	2.12	4223	100	
SLU 17	600	-3	-17860	0.33	1.5	2.55	4576	100	
SLU 18	750	-3	-15441	0.33	1.5	2.21	4293	100	
SLU 18	600	-3	-18441	0.33	1.5	2.63	4642	100	
SLU 19	750	-3	-15274	0.33	1.5	2.18	4273	100	
SLU 19	600	-3	-18274	0.33	1.5	2.61	4623	100	
SLU 20	750	-3	-15482	0.33	1.5	2.21	4298	100	
SLU 20	600	-3	-18482	0.33	1.5	2.64	4646	100	

Verifica a pressoflessione fuori piano D.M. 14-01-08 (N.T.C.)
quota 730 Ta 0.06 Wa 0.15 denominatore 8

muratura

comb.	fd	Sa	x	N	M	Mc	c.s.	
SLV 1	11	0.52	12.64	-11933	69993	342280	4.89	
SLV 2	11	0.52	12.62	-11916	69993	341890	4.88	
SLV 3	11	0.52	12.47	-11778	69993	338784	4.84	
SLV 4	11	0.52	12.45	-11760	69993	338391	4.83	
SLV 5	11	0.52	12.75	-12037	69993	344590	4.92	
SLV 6	11	0.52	12.72	-12018	69993	344158	4.92	
SLV 7	11	0.52	12.2	-11518	69993	332894	4.76	
SLV 8	11	0.52	12.17	-11499	69993	332451	4.75	
SLV 9	11	0.52	12.67	-11969	69993	343077	4.9	
SLV 10	11	0.52	12.65	-11950	69993	342644	4.9	
SLV 11	11	0.52	12.12	-11450	69993	331344	4.73	
SLV 12	11	0.52	12.1	-11431	69993	330900	4.73	
SLV 13	11	0.52	12.4	-11707	69993	337195	4.82	
SLV 14	11	0.52	12.38	-11690	69993	336801	4.81	
SLV 15	11	0.52	12.23	-11552	69993	333662	4.77	
SLV 16	11	0.52	12.21	-11534	69993	333265	4.76	

Verifica dei meccanismi locali di collasso con analisi cinematica lineare
accelerazione limite = 196,01; forza di aggancio al piano = 30

combinazione	N top	N base	V orto	alfa0	M*	e*	a0*	
SLV 1	-2466	-10507	123	0.6	8.684	0.892	489	
SLV 2	-2467	-10520	124	0.6	8.685	0.892	488	
SLV 3	-2467	-10580	145	0.596	8.685	0.892	486	
SLV 4	-2469	-10592	145	0.596	8.686	0.892	485	
SLV 5	-2466	-10510	-4	0.62	8.684	0.892	505	
SLV 6	-2467	-10524	-3	0.62	8.685	0.892	505	
SLV 7	-2470	-10751	69	0.609	8.687	0.892	496	
SLV 8	-2471	-10765	69	0.608	8.689	0.892	496	
SLV 9	-2467	-10585	-91	0.605	8.685	0.892	493	
SLV 10	-2468	-10599	-90	0.605	8.686	0.892	493	
SLV 11	-2470	-10826	-18	0.617	8.688	0.892	502	
SLV 12	-2472	-10840	-18	0.617	8.689	0.892	502	
SLV 13	-2469	-10757	-167	0.592	8.687	0.892	482	
SLV 14	-2471	-10770	-167	0.592	8.688	0.892	482	
SLV 15	-2470	-10830	-145	0.596	8.688	0.892	485	
SLV 16	-2472	-10842	-145	0.596	8.689	0.892	485	

Maschio 33
Dati geometrici

X ini.	Y ini.	X fin.	Y fin.	quota i.	quota.s	l	sp.	h netta	h ini.	h fin.	a
135	880	135	560	L2	L3	320	70	460	560	560	

Materiale: Muratura in pietrame consolidata con iniezioni LC1
f medio 30
tau 0.9
E 24000
G 8053.69
Fattore di confidenza 1.35

Verifica a pressoflessione per azioni non sismiche 4.5.6.2 D.M. 14-01-08 (N.T.C.) gammaM 3

comb.	quota	N	M	p	es1	es2	ea	ev	e ver (cm)	Ft	Fl	Nu (daN)	
1	1060	-6000	69235	1	0	8.13	2.3	0,00	10,43	0,55	0,89	81367	
1	730	-25376	-271111	1	0	8.13	2.3	0,00	5,21	0,71	0,90	104918	
1	500	-30740	256218	1	0	8.13	2.3	0,00	10,43	0,55	0,92	84231	
2	1060	-6791	76676	1	0	8.16	2.3	0,00	10,46	0,55	0,89	81456	
2	730	-26633	-277681	1	0	8.16	2.3	0,00	5,23	0,71	0,90	105105	
2	500	-31920	283064	1	0	8.16	2.3	0,00	10,46	0,55	0,91	83619	
3	1060	-7888	85590	1	0	8.21	2.3	0,00	10,51	0,55	0,89	81666	
3	730	-28164	-281969	1	0	8.21	2.3	0,00	5,25	0,70	0,90	105429	
3	500	-33078	293443	1	0	8.21	2.3	0,00	10,51	0,55	0,91	83428	
4	1060	-7567	81968	1	0	8.2	2.3	0,00	10,50	0,55	0,89	81698	
4	730	-27564	-277236	1	0	8.2	2.3	0,00	5,25	0,70	0,90	105389	
4	500	-32393	271046	1	0	8.2	2.3	0,00	10,50	0,55	0,92	83893	
5	1060	-7963	85689	1	0	8.21	2.3	0,00	10,51	0,55	0,90	81719	
5	730	-28192	-280521	1	0	8.21	2.3	0,00	5,26	0,70	0,90	105477	
5	500	-32984	284469	1	0	8.21	2.3	0,00	10,51	0,55	0,92	83621	
6	1060	-8130	77024	1	0	7.23	2.3	0,00	9,53	0,58	0,91	86943	
6	730	-28028	-305422	1	0	7.23	2.3	0,00	4,76	0,73	0,89	107622	
6	500	-32624	270743	1	0	7.23	2.3	0,00	9,53	0,58	0,92	88040	
7	1060	-8921	84465	1	0	7.33	2.3	0,00	9,63	0,57	0,91	86514	
7	730	-29284	-311992	1	0	7.33	2.3	0,00	4,82	0,72	0,90	107564	
7	500	-33805	297588	1	0	7.33	2.3	0,00	9,63	0,57	0,91	87132	
8	1060	-10018	93379	1	0	7.46	2.3	0,00	9,76	0,57	0,91	86128	
8	730	-30815	-316280	1	0	7.46	2.3	0,00	4,88	0,72	0,90	107605	
8	500	-34962	307968	1	0	7.46	2.3	0,00	9,76	0,57	0,91	86601	
9	1060	-9698	89757	1	0	7.43	2.3	0,00	9,73	0,57	0,91	86303	
9	730	-30215	-311547	1	0	7.43	2.3	0,00	4,86	0,72	0,90	107641	
9	500	-34278	285571	1	0	7.43	2.3	0,00	9,73	0,57	0,92	87158	
10	1060	-10093	93478	1	0	7.47	2.3	0,00	9,77	0,57	0,91	86139	
10	730	-30843	-314832	1	0	7.47	2.3	0,00	4,88	0,72	0,90	107635	
10	500	-34868	298993	1	0	7.47	2.3	0,00	9,77	0,57	0,92	86773	
11	1060	-7800	90005	1	0	8.13	2.3	0,00	10,43	0,55	0,89	81367	
11	730	-32989	-352444	1	0	8.13	2.3	0,00	5,21	0,71	0,90	104918	
11	500	-39962	333084	1	0	8.13	2.3	0,00	10,43	0,55	0,92	84231	
12	1060	-8591	97447	1	0	8.15	2.3	0,00	10,45	0,55	0,89	81438	
12	730	-34246	-359015	1	0	8.15	2.3	0,00	5,23	0,71	0,90	105062	
12	500	-41142	359929	1	0	8.15	2.3	0,00	10,45	0,55	0,91	83754	
13	1060	-9688	106360	1	0	8.19	2.3	0,00	10,49	0,55	0,89	81611	
13	730	-35777	-363302	1	0	8.19	2.3	0,00	5,25	0,70	0,90	105313	
13	500	-42300	370309	1	0	8.19	2.3	0,00	10,49	0,55	0,91	83593	
14	1060	-9367	102738	1	0	8.19	2.3	0,00	10,49	0,55	0,89	81635	
14	730	-35177	-358569	1	0	8.19	2.3	0,00	5,24	0,70	0,90	105281	

comb.	quota	N	M	p	es1	es2	ea	ev	e ver (cm)	Ft	Fl	Nu (daN)	
14	500	-41615	347912	1	0	8.19	2.3	0,00	10,49	0,55	0,92	83959	
15	1060	-9763	106459	1	0	8.2	2.3	0,00	10,50	0,55	0,89	81655	
15	730	-35805	-361854	1	0	8.2	2.3	0,00	5,25	0,70	0,90	105351	
15	500	-42206	361335	1	0	8.2	2.3	0,00	10,50	0,55	0,92	83742	
16	1060	-9930	97794	1	0	7.39	2.3	0,00	9,69	0,57	0,90	85920	
16	730	-35640	-386755	1	0	7.39	2.3	0,00	4,84	0,72	0,89	107141	
16	500	-41846	347608	1	0	7.39	2.3	0,00	9,69	0,57	0,92	87348	
17	1060	-10721	105236	1	0	7.46	2.3	0,00	9,76	0,57	0,90	85640	
17	730	-36897	-393326	1	0	7.46	2.3	0,00	4,88	0,72	0,90	107118	
17	500	-43027	374454	1	0	7.46	2.3	0,00	9,76	0,57	0,92	86668	
18	1060	-11818	114149	1	0	7.56	2.3	0,00	9,86	0,57	0,91	85394	
18	730	-38428	-397613	1	0	7.56	2.3	0,00	4,93	0,72	0,90	107172	
18	500	-44184	384833	1	0	7.56	2.3	0,00	9,86	0,57	0,92	86267	
19	1060	-11498	110527	1	0	7.54	2.3	0,00	9,84	0,57	0,91	85521	
19	730	-37828	-392880	1	0	7.54	2.3	0,00	4,92	0,72	0,90	107194	
19	500	-43500	362436	1	0	7.54	2.3	0,00	9,84	0,57	0,92	86700	
20	1060	-11893	114248	1	0	7.57	2.3	0,00	9,87	0,57	0,91	85408	
20	730	-38456	-396165	1	0	7.57	2.3	0,00	4,93	0,72	0,90	107197	
20	500	-44090	375859	1	0	7.57	2.3	0,00	9,87	0,57	0,92	86402	

Verifica a taglio con rottura per fessurazione diagonale per azioni non sismiche Circ.617 C8.7.1.5 gammaM 3

comb.	quota	Vd	N	ftd	b	sigma0	Vu	c.s.	
SLU 1	750	1581	-23533	0.33	1.44	1.05	10584	6.7	
SLU 1	600	1588	-29851	0.33	1.44	1.33	11612	7.31	
SLU 2	750	1514	-24789	0.33	1.44	1.11	10796	7.13	
SLU 2	600	1521	-31207	0.33	1.44	1.39	11821	7.77	
SLU 3	750	1523	-26320	0.33	1.44	1.18	11049	7.25	
SLU 3	600	1531	-32751	0.33	1.44	1.46	12055	7.87	
SLU 4	750	1594	-25720	0.33	1.44	1.15	10951	6.87	
SLU 4	600	1602	-32057	0.33	1.44	1.43	11950	7.46	
SLU 5	750	1561	-26348	0.33	1.44	1.18	11054	7.08	
SLU 5	600	1568	-32735	0.33	1.44	1.46	12053	7.68	
SLU 6	750	1804	-26184	0.33	1.44	1.17	11027	6.11	
SLU 6	600	1812	-32386	0.33	1.44	1.45	12000	6.62	
SLU 7	750	1738	-27440	0.33	1.44	1.23	11231	6.46	
SLU 7	600	1746	-33742	0.33	1.44	1.51	12202	6.99	
SLU 8	750	1747	-28972	0.33	1.44	1.29	11475	6.57	
SLU 8	600	1755	-35286	0.33	1.44	1.58	12429	7.08	
SLU 9	750	1818	-28371	0.33	1.44	1.27	11380	6.26	
SLU 9	600	1826	-34592	0.33	1.44	1.54	12328	6.75	
SLU 10	750	1784	-29000	0.33	1.44	1.29	11479	6.43	
SLU 10	600	1792	-35270	0.33	1.44	1.57	12427	6.93	
SLU 11	750	2055	-30593	0.33	1.44	1.37	11727	5.71	
SLU 11	600	2064	-38806	0.33	1.44	1.73	12931	6.26	
SLU 12	750	1988	-31849	0.33	1.44	1.42	11919	6	
SLU 12	600	1998	-40162	0.33	1.44	1.79	13119	6.57	
SLU 13	750	1997	-33380	0.33	1.44	1.49	12149	6.08	
SLU 13	600	2007	-41707	0.33	1.44	1.86	13330	6.64	
SLU 14	750	2068	-32780	0.33	1.44	1.46	12059	5.83	
SLU 14	600	2078	-41012	0.33	1.44	1.83	13235	6.37	
SLU 15	750	2035	-33408	0.33	1.44	1.49	12153	5.97	
SLU 15	600	2045	-41691	0.33	1.44	1.86	13328	6.52	
SLU 16	750	2278	-33244	0.33	1.44	1.48	12129	5.32	
SLU 16	600	2288	-41341	0.33	1.44	1.85	13280	5.8	
SLU 17	750	2212	-34500	0.33	1.44	1.54	12314	5.57	
SLU 17	600	2222	-42697	0.33	1.44	1.91	13463	6.06	
SLU 18	750	2221	-36031	0.33	1.44	1.61	12537	5.64	
SLU 18	600	2231	-44242	0.33	1.44	1.98	13669	6.13	
SLU 19	750	2292	-35431	0.33	1.44	1.58	12450	5.43	
SLU 19	600	2302	-43548	0.33	1.44	1.94	13577	5.9	
SLU 20	750	2259	-36059	0.33	1.44	1.61	12541	5.55	
SLU 20	600	2269	-44226	0.33	1.44	1.97	13667	6.02	

Verifica a pressoflessione nel piano (7.8.2.2) e taglio con rottura per fessurazione diagonale (C8.7.1.5), gammaM = 2

comb.	quota	N	V par	V orto	M	M orto	N/(l*sp)	N/(l'*sp)	Mu	l'	fvd	Vt scorr.	Vt fess.diag.	
SLV 1	500	-50346	4637	1276	1010887	-45586	2.25	2.25	6138381	320	0.78	17536	18264	
SLV 1	1060	-8056	358	-49	72765	73	0.36	0.36	1239923	320	0.41	9078	10216	
SLV 2	500	-48388	2825	1155	778874	-39824	2.16	2.16	5971281	320	0.77	17144	17971	
SLV 2	1060	-7947	-1758	-55	116942	-34	0.35	0.35	1223708	320	0.4	9056	10187	
SLV 3	500	-44166	-1000	762	321116	-19846	1.97	1.97	5591255	320	0.73	16300	17323	
SLV 3	1060	-7762	-2890	55	160351	-81	0.35	0.35	1196288	320	0.4	9019	10138	
SLV 4	500	-42207	-2813	641	89103	-14083	1.88	1.88	5405846	320	0.71	15908	17014	
SLV 4	1060	-7652	-5006	49	204527	-188	0.34	0.34	1180024	320	0.4	8997	10108	
SLV 5	500	-47904	13834	2132	1632013	-116867	2.14	2.14	5929053	320	0.76	17047	17898	
SLV 5	1060	-8322	6302	-148	-75098	690	0.37	0.37	1279148	320	0.41	9131	10286	
SLV 6	500	-45723	11816	1998	1373635	-110449	2.04	2.04	5734540	320	0.74	16611	17565	
SLV 6	1060	-8200	3946	-154	-25902	571	0.37	0.37	1261139	320	0.41	9107	10254	
SLV 7	500	-27301	-4958	422	-667224	-31066	1.22	1.22	3804454	320	0.58	12927	14446	
SLV 7	1060	-7340	-4523	201	216853	179	0.33	0.33	1133583	320	0.4	8935	10024	
SLV 8	500	-25120	-6976	287	-925602	-24648	1.12	1.12	3541976	320	0.56	12491	14031	
SLV 8	1060	-7217	-6880	195	266049	60	0.32	0.32	1115392	320	0.4	8910	9991	
SLV 9	500	-39534	15991	2348	1463336	-151943	1.76	1.76	5143357	320	0.69	15373	16582	
SLV 9	1060	-8250	8047	-128	-112102	1061	0.37	0.37	1268483	320	0.41	9117	10267	
SLV 10	500	-37353	13973	2213	1204958	-145526	1.67	1.67	4921232	320	0.67	14937	16222	
SLV 10	1060	-8128	5690	-134	-62905	942	0.36	0.36	1250460	320	0.41	9092	10235	
SLV 11	500	-18931	-2801	637	-835901	-66142	0.85	0.85	2757919	320	0.5	11253	12779	
SLV 11	1060	-7267	-2779	221	179850	550	0.32	0.32	1122810	320	0.4	8920	10005	
SLV 12	500	-16750	-4819	502	-1094279	-59724	0.75	0.84	2467829	284.01	0.5	9977	12308	
SLV 12	1060	-7145	-5135	215	229046	431	0.32	0.32	1104606	320	0.4	8896	9972	
SLV 13	500	-22447	11828	1993	448631	-162508	1	1	3210385	320	0.53	11956	13504	
SLV 13	1060	-7815	6173	18	-50579	1309	0.35	0.35	1204244	320	0.4	9030	10152	
SLV 14	500	-20488	10015	1872	216618	-156745	0.91	0.91	2960640	320	0.52	11564	13105	
SLV 14	1060	-7706	4057	12	-6403	1202	0.34	0.34	1187989	320	0.4	9008	10123	
SLV 15	500	-16266	6190	1480	-241140	-136767	0.73	0.73	2402419	320	0.48	10720	12201	
SLV 15	1060	-7520	2925	122	37006	1156	0.34	0.34	1160501	320	0.4	8971	10073	
SLV 16	500	-14307	4378	1359	-473153	-131005	0.64	0.64	2134365	320	0.46	10328	11758	
SLV 16	1060	-7411	809	117	81183	1049	0.33	0.33	1144198	320	0.4	8949	10043	

Verifica a pressoflessione fuori piano D.M. 14-01-08 (N.T.C.)

muratura

quota 730 Ta 0 Wa 0.15 denominatore 8

comb.	fd	Sa	x	N	M	Mc	c.s.	
SLV 1	11	0.39	12.88	-38924	170573	1111685	6.52	
SLV 2	11	0.39	12.33	-37262	170573	1074466	6.3	
SLV 3	11	0.39	11.18	-33780	170573	993521	5.82	
SLV 4	11	0.39	10.63	-32118	170573	953473	5.59	
SLV 5	11	0.39	13.06	-39462	170573	1123532	6.59	
SLV 6	11	0.39	12.44	-37611	170573	1082355	6.35	
SLV 7	11	0.39	7.38	-22315	170573	698655	4.1	
SLV 8	11	0.39	6.77	-20465	170573	646978	3.79	
SLV 9	11	0.39	11.48	-34698	170573	1015243	5.95	
SLV 10	11	0.39	10.87	-32847	170573	971149	5.69	
SLV 11	11	0.39	5.81	-17552	170573	563339	3.3	
SLV 12	11	0.39	5.2	-15701	170573	508744	2.98	
SLV 13	11	0.39	7.62	-23044	170573	718694	4.21	
SLV 14	11	0.39	7.08	-21382	170573	672743	3.94	
SLV 15	11	0.39	5.92	-17900	170573	573503	3.36	
SLV 16	11	0.39	5.37	-16239	170573	524723	3.08	

Verifica dei meccanismi locali di collasso con analisi cinematica lineare
accelerazione limite = 196,01; forza di aggancio al piano = 30

combinazione	N top	N base	V orto	alfa0	M*	e*	a0*	
SLV 1	-8056	-50346	-49	0.613	27.929	0.892	500	
SLV 2	-7947	-48388	-55	0.616	27.836	0.892	502	
SLV 3	-7762	-44166	55	0.621	27.681	0.892	506	
SLV 4	-7652	-42207	49	0.625	27.589	0.893	508	
SLV 5	-8322	-47904	-148	0.601	28.154	0.891	490	
SLV 6	-8200	-45723	-154	0.604	28.051	0.891	492	
SLV 7	-7340	-27301	201	0.626	27.33	0.893	509	
SLV 8	-7217	-25120	195	0.63	27.229	0.894	512	
SLV 9	-8250	-39534	-128	0.604	28.093	0.891	492	
SLV 10	-8128	-37353	-134	0.607	27.989	0.892	495	
SLV 11	-7267	-18931	221	0.627	27.27	0.894	510	
SLV 12	-7145	-16750	215	0.631	27.17	0.894	513	
SLV 13	-7815	-22447	18	0.622	27.726	0.892	506	
SLV 14	-7706	-20488	12	0.625	27.634	0.892	509	
SLV 15	-7520	-16266	122	0.624	27.48	0.893	508	
SLV 16	-7411	-14307	117	0.628	27.389	0.893	511	

Maschio 34
Dati geometrici

X ini.	Y ini.	X fin.	Y fin.	quota i.	quota.s	l	sp.	h netta	h ini.	h fin.	a
135	1325	135	1030	L2	L3	295	70	460	560	560	

Materiale: Muratura in pietrame consolidata con iniezioni LC1
f medio 30
tau 0.9
E 24000
G 8053.69
Fattore di confidenza 1.35

Verifica a pressoflessione per azioni non sismiche 4.5.6.2 D.M. 14-01-08 (N.T.C.) gammaM 3

comb.	quota	N	M	p	es1	es2	ea	ev	e ver (cm)	Ft	Fl	Nu (daN)	
1	1060	-5612	-8316	1	0	8.01	2.3	0,00	10,31	0,56	0,98	83677	
1	730	-28651	115075	1	0	8.01	2.3	0,00	5,16	0,71	0,96	103758	
1	500	-32756	464241	1	0	8.01	2.3	0,00	10,31	0,56	0,85	72267	
2	1060	-6341	-7270	1	0	8.06	2.3	0,00	10,36	0,55	0,99	83792	
2	730	-29812	127201	1	0	8.06	2.3	0,00	5,18	0,71	0,95	103326	
2	500	-33631	476912	1	0	8.06	2.3	0,00	10,36	0,55	0,85	72099	
3	1060	-7364	-5508	1	0	8.1	2.3	0,00	10,40	0,55	0,99	83953	
3	730	-31432	142113	1	0	8.1	2.3	0,00	5,20	0,71	0,95	102884	
3	500	-34995	505359	1	0	8.1	2.3	0,00	10,40	0,55	0,85	71698	
4	1060	-7072	-5798	1	0	8.09	2.3	0,00	10,39	0,55	0,99	83942	
4	730	-30965	136378	1	0	8.09	2.3	0,00	5,20	0,71	0,95	103059	
4	500	-34704	504880	1	0	8.09	2.3	0,00	10,39	0,55	0,85	71648	
5	1060	-7437	-5275	1	0	8.11	2.3	0,00	10,41	0,55	0,99	83977	
5	730	-31546	142441	1	0	8.11	2.3	0,00	5,20	0,71	0,95	102882	
5	500	-35142	511215	1	0	8.11	2.3	0,00	10,41	0,55	0,85	71594	
6	1060	-7594	-11106	1	0	7.13	2.3	0,00	9,43	0,58	0,98	87331	
6	730	-31708	128067	1	0	7.13	2.3	0,00	4,72	0,73	0,96	106571	
6	500	-35113	501453	1	0	7.13	2.3	0,00	9,43	0,58	0,85	75305	
7	1060	-8324	-10060	1	0	7.24	2.3	0,00	9,54	0,58	0,99	87107	
7	730	-32869	140193	1	0	7.24	2.3	0,00	4,77	0,73	0,95	105946	
7	500	-35988	514123	1	0	7.24	2.3	0,00	9,54	0,58	0,85	74904	
8	1060	-9346	-8298	1	0	7.37	2.3	0,00	9,67	0,57	0,99	86882	
8	730	-34489	155106	1	0	7.37	2.3	0,00	4,83	0,72	0,95	105269	
8	500	-37352	542571	1	0	7.37	2.3	0,00	9,67	0,57	0,85	74232	
9	1060	-9055	-8588	1	0	7.33	2.3	0,00	9,63	0,57	0,99	86966	
9	730	-34022	149370	1	0	7.33	2.3	0,00	4,82	0,72	0,95	105502	
9	500	-37061	542091	1	0	7.33	2.3	0,00	9,63	0,57	0,85	74257	
10	1060	-9419	-8065	1	0	7.38	2.3	0,00	9,68	0,57	0,99	86880	
10	730	-34603	155433	1	0	7.38	2.3	0,00	4,84	0,72	0,95	105250	
10	500	-37499	548427	1	0	7.38	2.3	0,00	9,68	0,57	0,85	74112	
11	1060	-7295	-10811	1	0	8.01	2.3	0,00	10,31	0,56	0,98	83677	
11	730	-37246	149597	1	0	8.01	2.3	0,00	5,16	0,71	0,96	103758	
11	500	-42583	603513	1	0	8.01	2.3	0,00	10,31	0,56	0,85	72267	
12	1060	-8025	-9765	1	0	8.05	2.3	0,00	10,35	0,55	0,99	83768	
12	730	-38407	161724	1	0	8.05	2.3	0,00	5,17	0,71	0,96	103421	
12	500	-43458	616184	1	0	8.05	2.3	0,00	10,35	0,55	0,85	72134	
13	1060	-9047	-8002	1	0	8.09	2.3	0,00	10,39	0,55	0,99	83902	
13	730	-40027	176636	1	0	8.09	2.3	0,00	5,19	0,71	0,95	103063	
13	500	-44822	644631	1	0	8.09	2.3	0,00	10,39	0,55	0,85	71812	
14	1060	-8756	-8293	1	0	8.08	2.3	0,00	10,38	0,55	0,99	83891	

comb.	quota	N	M	p	es1	es2	ea	ev	e ver (cm)	Ft	Fl	Nu (daN)	
14	730	-39560	170900	1	0	8.08	2.3	0,00	5,19	0,71	0,95	103204	
14	500	-44531	644152	1	0	8.08	2.3	0,00	10,38	0,55	0,85	71776	
15	1060	-9120	-7770	1	0	8.09	2.3	0,00	10,39	0,55	0,99	83922	
15	730	-40141	176963	1	0	8.09	2.3	0,00	5,19	0,71	0,95	103061	
15	500	-44969	650488	1	0	8.09	2.3	0,00	10,39	0,55	0,85	71729	
16	1060	-9278	-13601	1	0	7.29	2.3	0,00	9,59	0,58	0,98	86668	
16	730	-40304	162589	1	0	7.29	2.3	0,00	4,80	0,72	0,96	106061	
16	500	-44940	640725	1	0	7.29	2.3	0,00	9,59	0,58	0,85	74758	
17	1060	-10007	-12555	1	0	7.37	2.3	0,00	9,67	0,57	0,99	86529	
17	730	-41465	174716	1	0	7.37	2.3	0,00	4,84	0,72	0,96	105590	
17	500	-45815	653396	1	0	7.37	2.3	0,00	9,67	0,57	0,85	74466	
18	1060	-11030	-10793	1	0	7.47	2.3	0,00	9,77	0,57	0,99	86391	
18	730	-43084	189628	1	0	7.47	2.3	0,00	4,88	0,72	0,95	105066	
18	500	-47179	681843	1	0	7.47	2.3	0,00	9,77	0,57	0,85	73951	
19	1060	-10738	-11083	1	0	7.44	2.3	0,00	9,74	0,57	0,99	86448	
19	730	-42618	183892	1	0	7.44	2.3	0,00	4,87	0,72	0,95	105249	
19	500	-46888	681364	1	0	7.44	2.3	0,00	9,74	0,57	0,85	73969	
20	1060	-11103	-10560	1	0	7.47	2.3	0,00	9,77	0,57	0,99	86392	
20	730	-43198	189955	1	0	7.47	2.3	0,00	4,89	0,72	0,95	105051	
20	500	-47326	687699	1	0	7.47	2.3	0,00	9,77	0,57	0,85	73858	

Verifica a taglio con rottura per fessurazione diagonale per azioni non sismiche Circ.617 C8.7.1.5 gammaM 3

comb.	quota	Vd	N	ftd	b	sigma0	Vu	c.s.	
SLU 1	750	65	-26952	0.33	1.5	1.31	10174	100	
SLU 1	600	70	-33834	0.33	1.5	1.64	11161	100	
SLU 2	750	30	-28113	0.33	1.5	1.36	10347	100	
SLU 2	600	35	-34999	0.33	1.5	1.69	11319	100	
SLU 3	750	-43	-29733	0.33	1.5	1.44	10584	100	
SLU 3	600	-38	-36623	0.33	1.5	1.77	11537	100	
SLU 4	750	-40	-29266	0.33	1.5	1.42	10516	100	
SLU 4	600	-35	-36155	0.33	1.5	1.75	11475	100	
SLU 5	750	-57	-29847	0.33	1.5	1.45	10600	100	
SLU 5	600	-52	-36737	0.33	1.5	1.78	11552	100	
SLU 6	750	5	-30009	0.33	1.5	1.45	10624	100	
SLU 6	600	10	-36896	0.33	1.5	1.79	11573	100	
SLU 7	750	-30	-31170	0.33	1.5	1.51	10790	100	
SLU 7	600	-25	-38061	0.33	1.5	1.84	11726	100	
SLU 8	750	-104	-32790	0.33	1.5	1.59	11017	100	
SLU 8	600	-98	-39685	0.33	1.5	1.92	11936	100	
SLU 9	750	-100	-32323	0.33	1.5	1.57	10952	100	
SLU 9	600	-95	-39217	0.33	1.5	1.9	11876	100	
SLU 10	750	-118	-32904	0.33	1.5	1.59	11033	93.62	
SLU 10	600	-112	-39799	0.33	1.5	1.93	11950	100	
SLU 11	750	85	-35038	0.33	1.5	1.7	11325	100	
SLU 11	600	91	-43984	0.33	1.5	2.13	12475	100	
SLU 12	750	50	-36199	0.33	1.5	1.75	11480	100	
SLU 12	600	56	-45149	0.33	1.5	2.19	12617	100	
SLU 13	750	-24	-37818	0.33	1.5	1.83	11694	100	
SLU 13	600	-17	-46773	0.33	1.5	2.27	12812	100	
SLU 14	750	-20	-37352	0.33	1.5	1.81	11633	100	
SLU 14	600	-14	-46305	0.33	1.5	2.24	12756	100	
SLU 15	750	-38	-37932	0.33	1.5	1.84	11709	100	
SLU 15	600	-31	-46887	0.33	1.5	2.27	12826	100	
SLU 16	750	24	-38095	0.33	1.5	1.84	11730	100	
SLU 16	600	31	-47046	0.33	1.5	2.28	12845	100	
SLU 17	750	-11	-39256	0.33	1.5	1.9	11881	100	
SLU 17	600	-4	-48211	0.33	1.5	2.33	12983	100	
SLU 18	750	-84	-40876	0.33	1.5	1.98	12087	100	
SLU 18	600	-77	-49835	0.33	1.5	2.41	13173	100	
SLU 19	750	-81	-40409	0.33	1.5	1.96	12028	100	
SLU 19	600	-74	-49367	0.33	1.5	2.39	13118	100	
SLU 20	750	-98	-40989	0.33	1.5	1.98	12102	100	
SLU 20	600	-91	-49949	0.33	1.5	2.42	13186	100	

Verifica a pressoflessione nel piano (7.8.2.2) e taglio con rottura per fessurazione diagonale (C8.7.1.5), gammaM = 2

comb.	quota	N	V par	V orto	M	M orto	N/(l*sp)	N/(l'*sp)	Mu	l'	fvd	Vt scorr.	Vt fess.diag.	
SLV 1	500	-33240	2014	-1251	1218696	32325	1.61	1.61	4067303	295	0.66	13531	14139	
SLV 1	1060	-7394	4052	-8	-7543	-37	0.36	0.36	1049312	295	0.4	8362	9017	
SLV 2	500	-35923	1363	-1227	1212963	27541	1.74	1.74	4322620	295	0.68	14068	14568	
SLV 2	1060	-7554	2716	-11	22182	-36	0.37	0.37	1071095	295	0.41	8394	9058	
SLV 3	500	-42933	-2031	-1015	1019809	-3265	2.08	2.08	4938533	295	0.75	15470	15633	
SLV 3	1060	-7851	1816	110	49401	-35	0.38	0.38	1111372	295	0.41	8453	9133	
SLV 4	500	-45615	-2682	-992	1014075	-8050	2.21	2.21	5154528	295	0.78	16006	16022	
SLV 4	1060	-8011	480	107	79125	-33	0.39	0.39	1133045	295	0.41	8485	9173	
SLV 5	500	-18483	6383	-476	1017611	23300	0.9	0.95	2467877	277.33	0.52	10168	11498	
SLV 5	1060	-6519	6733	-337	-107490	-31	0.32	0.32	929389	295	0.4	8187	8792	
SLV 6	500	-21470	5659	-449	1011226	17972	1.04	1.04	2818192	295	0.54	11177	12079	
SLV 6	1060	-6697	5245	-340	-74388	-29	0.32	0.32	953881	295	0.4	8223	8838	
SLV 7	500	-50790	-7100	309	354652	-95334	2.46	2.46	5540563	295	0.83	17041	16747	
SLV 7	1060	-8040	-721	57	82321	-23	0.39	0.39	1137046	295	0.41	8491	9180	
SLV 8	500	-53777	-7824	335	348267	-100662	2.6	2.6	5744914	295	0.85	17639	17151	
SLV 8	1060	-8218	-2208	54	115424	-22	0.4	0.4	1161128	295	0.41	8527	9225	
SLV 9	500	-15657	6052	425	646086	-20259	0.76	0.76	2123958	295	0.48	10015	10919	
SLV 9	1060	-6233	6729	-501	-134768	-23	0.3	0.3	889933	295	0.39	8130	8717	
SLV 10	500	-18644	5327	451	639701	-25587	0.9	0.9	2487044	295	0.51	10612	11530	
SLV 10	1060	-6411	5242	-503	-101666	-21	0.31	0.31	914503	295	0.4	8165	8763	
SLV 11	500	-47964	-7431	1209	-16873	-138893	2.32	2.32	5334766	295	0.8	16476	16355	
SLV 11	1060	-7754	-724	-107	55043	-16	0.38	0.38	1098249	295	0.41	8434	9108	
SLV 12	500	-50951	-8156	1236	-23258	-144221	2.47	2.47	5551887	295	0.83	17073	16769	
SLV 12	1060	-7932	-2211	-110	88145	-14	0.38	0.38	1122408	295	0.41	8470	9153	
SLV 13	500	-23819	909	1752	-19722	-112872	1.15	1.15	3084222	295	0.56	11647	12517	
SLV 13	1060	-6440	4041	-554	-98470	-11	0.31	0.31	918575	295	0.4	8171	8771	
SLV 14	500	-26501	259	1776	-25456	-117656	1.28	1.28	3377761	295	0.59	12184	13000	
SLV 14	1060	-6600	2705	-556	-68746	-10	0.32	0.32	940589	295	0.4	8203	8813	
SLV 15	500	-33511	-3135	1987	-218610	-148462	1.62	1.62	4093573	295	0.66	13586	14183	
SLV 15	1060	-6897	1805	-436	-41527	-9	0.33	0.33	981294	295	0.4	8263	8890	
SLV 16	500	-36193	-3786	2011	-224343	-153246	1.75	1.75	4347791	295	0.68	14122	14611	
SLV 16	1060	-7057	469	-438	-11802	-8	0.34	0.34	1003197	295	0.4	8295	8931	

Verifica a pressoflessione fuori piano D.M. 14-01-08 (N.T.C.)

quota 730 Ta 0 Wa 0.15 denominatore 8

comb.	fd	Sa	x	N	M	Mc	c.s.	
SLV 1	11	0.39	10.47	-29165	157247	868127	5.52	
SLV 2	11	0.39	11.44	-31861	157247	932954	5.93	
SLV 3	11	0.39	12.77	-35579	157247	1018099	6.47	
SLV 4	11	0.39	13.74	-38275	157247	1076720	6.85	
SLV 5	11	0.39	7.08	-19731	157247	620715	3.95	
SLV 6	11	0.39	8.16	-22733	157247	702910	4.47	
SLV 7	11	0.39	14.76	-41112	157247	1135593	7.22	
SLV 8	11	0.39	15.83	-44114	157247	1194750	7.6	
SLV 9	11	0.39	6.53	-18190	157247	577272	3.67	
SLV 10	11	0.39	7.61	-21192	157247	661127	4.2	
SLV 11	11	0.39	14.2	-39571	157247	1103975	7.02	
SLV 12	11	0.39	15.28	-42573	157247	1164791	7.41	
SLV 13	11	0.39	8.62	-24029	157247	737394	4.69	
SLV 14	11	0.39	9.59	-26725	157247	807191	5.13	
SLV 15	11	0.39	10.93	-30443	157247	899191	5.72	
SLV 16	11	0.39	11.89	-33139	157247	962781	6.12	

Verifica dei meccanismi locali di collasso con analisi cinematica lineare
accelerazione limite = 196,01; forza di aggancio al piano = 30

combinazione	N top	N base	V orto	alfa0	M*	e*	a0*	
SLV 1	-7394	-33240	-8	0.616	25.719	0.892	502	
SLV 2	-7554	-35923	-11	0.611	25.855	0.891	498	
SLV 3	-7851	-42933	110	0.597	26.108	0.891	487	
SLV 4	-8011	-45615	107	0.593	26.245	0.891	484	
SLV 5	-6519	-18483	-337	0.625	24.991	0.894	508	
SLV 6	-6697	-21470	-340	0.619	25.137	0.894	503	
SLV 7	-8040	-50790	57	0.595	26.27	0.891	485	
SLV 8	-8218	-53777	54	0.59	26.424	0.89	481	
SLV 9	-6233	-15657	-501	0.624	24.759	0.895	507	
SLV 10	-6411	-18644	-503	0.618	24.903	0.895	502	
SLV 11	-7754	-47964	-107	0.6	26.025	0.891	489	
SLV 12	-7932	-50951	-110	0.595	26.177	0.891	485	
SLV 13	-6440	-23819	-554	0.614	24.927	0.894	499	
SLV 14	-6600	-26501	-556	0.609	25.058	0.894	495	
SLV 15	-6897	-33511	-436	0.607	25.303	0.893	494	
SLV 16	-7057	-36193	-438	0.602	25.436	0.893	490	

Maschio 35
Maschio considerato membratura sismica secondaria
Dati geometrici

X ini.	Y ini.	X fin.	Y fin.	quota i.	quota.s	l	sp.	h netta	h ini.	h fin.	a
135	1530	135	1445	L2	L3	85	70	460	560	560	

Materiale: Muratura in pietrame consolidata con iniezioni LC1
f medio 30
tau 0.9
E 24000
G 8053.69
Fattore di confidenza 1.35

Verifica a pressoflessione per azioni non sismiche 4.5.6.2 D.M. 14-01-08 (N.T.C.) gammaM 3

comb.	quota	N	M	p	es1	es2	ea	ev	e ver (cm)	Ft	Fl	Nu (daN)	
1	1060	-1383	-1657	1	0	9.37	2.3	0,00	11,67	0,52	0,96	21851	
1	730	-6332	43232	1	0	9.37	2.3	0,00	5,83	0,68	0,75	22413	
1	500	-8789	19351	1	0	9.37	2.3	0,00	11,67	0,52	0,92	21009	
2	1060	-1572	-1813	1	0	9.36	2.3	0,00	11,66	0,52	0,96	21893	
2	730	-6557	44601	1	0	9.36	2.3	0,00	5,83	0,68	0,75	22443	
2	500	-8988	19714	1	0	9.36	2.3	0,00	11,66	0,52	0,92	21020	
3	1060	-1842	-1795	1	0	9.34	2.3	0,00	11,64	0,52	0,96	22074	
3	730	-6882	46801	1	0	9.34	2.3	0,00	5,82	0,68	0,75	22455	
3	500	-9292	22325	1	0	9.34	2.3	0,00	11,64	0,52	0,91	20875	
4	1060	-1768	-1632	1	0	9.33	2.3	0,00	11,63	0,52	0,97	22130	
4	730	-6796	46375	1	0	9.33	2.3	0,00	5,81	0,68	0,75	22435	
4	500	-9223	23082	1	0	9.33	2.3	0,00	11,63	0,52	0,91	20802	
5	1060	-1862	-1710	1	0	9.33	2.3	0,00	11,63	0,52	0,97	22133	
5	730	-6908	47059	1	0	9.33	2.3	0,00	5,81	0,68	0,75	22447	
5	500	-9323	23264	1	0	9.33	2.3	0,00	11,63	0,52	0,91	20807	
6	1060	-1920	-1942	1	0	8.13	2.3	0,00	10,43	0,55	0,96	23450	
6	730	-6995	48182	1	0	8.13	2.3	0,00	5,21	0,71	0,75	23245	
6	500	-9362	22955	1	0	8.13	2.3	0,00	10,43	0,55	0,91	22162	
7	1060	-2109	-2098	1	0	8.24	2.3	0,00	10,54	0,55	0,96	23338	
7	730	-7220	49551	1	0	8.24	2.3	0,00	5,27	0,70	0,75	23195	
7	500	-9560	23318	1	0	8.24	2.3	0,00	10,54	0,55	0,91	22054	
8	1060	-2378	-2081	1	0	8.34	2.3	0,00	10,64	0,55	0,97	23319	
8	730	-7545	51751	1	0	8.34	2.3	0,00	5,32	0,70	0,75	23121	
8	500	-9864	25930	1	0	8.34	2.3	0,00	10,64	0,55	0,90	21768	
9	1060	-2305	-1917	1	0	8.3	2.3	0,00	10,60	0,55	0,97	23403	
9	730	-7459	51324	1	0	8.3	2.3	0,00	5,30	0,70	0,75	23124	
9	500	-9796	26687	1	0	8.3	2.3	0,00	10,60	0,55	0,90	21727	
10	1060	-2399	-1995	1	0	8.34	2.3	0,00	10,64	0,55	0,97	23356	
10	730	-7571	52009	1	0	8.34	2.3	0,00	5,32	0,70	0,75	23108	
10	500	-9895	26868	1	0	8.34	2.3	0,00	10,64	0,55	0,90	21690	
11	1060	-1798	-2154	1	0	9.37	2.3	0,00	11,67	0,52	0,96	21851	
11	730	-8232	56201	1	0	9.37	2.3	0,00	5,83	0,68	0,75	22413	
11	500	-11426	25157	1	0	9.37	2.3	0,00	11,67	0,52	0,92	21009	
12	1060	-1987	-2310	1	0	9.36	2.3	0,00	11,66	0,52	0,96	21885	
12	730	-8457	57571	1	0	9.36	2.3	0,00	5,83	0,68	0,75	22436	
12	500	-11624	25519	1	0	9.36	2.3	0,00	11,66	0,52	0,92	21018	
13	1060	-2256	-2293	1	0	9.34	2.3	0,00	11,64	0,52	0,96	22033	
13	730	-8782	59771	1	0	9.34	2.3	0,00	5,82	0,68	0,75	22447	
13	500	-11928	28131	1	0	9.34	2.3	0,00	11,64	0,52	0,91	20906	

comb.	quota	N	M	p	es1	es2	ea	ev	e ver (cm)	Ft	Fl	Nu (daN)	
14	1060	-2183	-2129	1	0	9.33	2.3	0,00	11,63	0,52	0,96	22077	
14	730	-8696	59344	1	0	9.33	2.3	0,00	5,82	0,68	0,75	22430	
14	500	-11860	28888	1	0	9.33	2.3	0,00	11,63	0,52	0,91	20850	
15	1060	-2277	-2207	1	0	9.33	2.3	0,00	11,63	0,52	0,96	22082	
15	730	-8808	60029	1	0	9.33	2.3	0,00	5,82	0,68	0,75	22441	
15	500	-11959	29069	1	0	9.33	2.3	0,00	11,63	0,52	0,91	20854	
16	1060	-2335	-2439	1	0	8.35	2.3	0,00	10,65	0,55	0,96	23164	
16	730	-8895	61151	1	0	8.35	2.3	0,00	5,32	0,70	0,75	23100	
16	500	-11998	28761	1	0	8.35	2.3	0,00	10,65	0,55	0,91	21968	
17	1060	-2524	-2595	1	0	8.42	2.3	0,00	10,72	0,54	0,96	23092	
17	730	-9120	62521	1	0	8.42	2.3	0,00	5,36	0,70	0,75	23068	
17	500	-12197	29123	1	0	8.42	2.3	0,00	10,72	0,54	0,91	21895	
18	1060	-2793	-2578	1	0	8.5	2.3	0,00	10,80	0,54	0,97	23099	
18	730	-9444	64721	1	0	8.5	2.3	0,00	5,40	0,70	0,75	23018	
18	500	-12501	31735	1	0	8.5	2.3	0,00	10,80	0,54	0,91	21681	
19	1060	-2719	-2414	1	0	8.47	2.3	0,00	10,77	0,54	0,97	23164	
19	730	-9359	64294	1	0	8.47	2.3	0,00	5,38	0,70	0,75	23019	
19	500	-12433	32492	1	0	8.47	2.3	0,00	10,77	0,54	0,90	21648	
20	1060	-2814	-2492	1	0	8.5	2.3	0,00	10,80	0,54	0,97	23132	
20	730	-9471	64979	1	0	8.5	2.3	0,00	5,40	0,70	0,75	23009	
20	500	-12532	32673	1	0	8.5	2.3	0,00	10,80	0,54	0,90	21621	

Verifica a taglio con rottura per fessurazione diagonale per azioni non sismiche Circ.617 C8.7.1.5 gammaM 3

comb.	quota	Vd	N	ftd	b	sigma0	Vu	c.s.	
SLU 1	750	42	-6023	0.33	1.5	1.01	2657	63.64	
SLU 1	600	-1	-7762	0.33	1.5	1.3	2931	100	
SLU 2	750	43	-6255	0.33	1.5	1.05	2695	62.89	
SLU 2	600	-1	-7987	0.33	1.5	1.34	2964	100	
SLU 3	750	45	-6591	0.33	1.5	1.11	2749	61.04	
SLU 3	600	-2	-8305	0.33	1.5	1.4	3011	100	
SLU 4	750	45	-6503	0.33	1.5	1.09	2735	60.95	
SLU 4	600	-2	-8218	0.33	1.5	1.38	2999	100	
SLU 5	750	45	-6619	0.33	1.5	1.11	2754	60.62	
SLU 5	600	-2	-8330	0.33	1.5	1.4	3015	100	
SLU 6	750	45	-6707	0.33	1.5	1.13	2768	62.05	
SLU 6	600	-2	-8418	0.33	1.5	1.41	3028	100	
SLU 7	750	46	-6939	0.33	1.5	1.17	2804	61.36	
SLU 7	600	-2	-8642	0.33	1.5	1.45	3060	100	
SLU 8	750	48	-7275	0.33	1.5	1.22	2857	59.64	
SLU 8	600	-2	-8961	0.33	1.5	1.51	3106	100	
SLU 9	750	48	-7187	0.33	1.5	1.21	2843	59.56	
SLU 9	600	-2	-8873	0.33	1.5	1.49	3094	100	
SLU 10	750	48	-7303	0.33	1.5	1.23	2861	59.25	
SLU 10	600	-2	-8986	0.33	1.5	1.51	3109	100	
SLU 11	750	54	-7830	0.33	1.5	1.32	2941	54.19	
SLU 11	600	-2	-10091	0.33	1.5	1.7	3262	100	
SLU 12	750	55	-8062	0.33	1.5	1.35	2976	53.74	
SLU 12	600	-2	-10315	0.33	1.5	1.73	3293	100	
SLU 13	750	58	-8398	0.33	1.5	1.41	3025	52.55	
SLU 13	600	-2	-10634	0.33	1.5	1.79	3335	100	
SLU 14	750	57	-8310	0.33	1.5	1.4	3012	52.48	
SLU 14	600	-2	-10546	0.33	1.5	1.77	3323	100	
SLU 15	750	58	-8426	0.33	1.5	1.42	3029	52.27	
SLU 15	600	-2	-10658	0.33	1.5	1.79	3338	100	
SLU 16	750	57	-8514	0.33	1.5	1.43	3042	53.25	
SLU 16	600	-2	-10747	0.33	1.5	1.81	3350	100	
SLU 17	750	58	-8746	0.33	1.5	1.47	3075	52.81	
SLU 17	600	-2	-10971	0.33	1.5	1.84	3379	100	
SLU 18	750	60	-9082	0.33	1.5	1.53	3123	51.69	
SLU 18	600	-2	-11290	0.33	1.5	1.9	3421	100	
SLU 19	750	60	-8994	0.33	1.5	1.51	3111	51.62	
SLU 19	600	-2	-11202	0.33	1.5	1.88	3409	100	
SLU 20	750	61	-9110	0.33	1.5	1.53	3127	51.42	
SLU 20	600	-2	-11314	0.33	1.5	1.9	3424	100	

Verifica a pressoflessione fuori piano D.M. 14-01-08 (N.T.C.)
quota 730 Ta 0.06 Wa 0.15 denominatore 8

comb.	fd	Sa	x	N	M	Mc	c.s.	
SLV 1	11	0.52	7.38	-5927	59494	185566	3.12	
SLV 2	11	0.52	7.71	-6193	59494	192872	3.24	
SLV 3	11	0.52	8.3	-6664	59494	205594	3.46	
SLV 4	11	0.52	8.63	-6931	59494	212656	3.57	
SLV 5	11	0.52	6.67	-5358	59494	169657	2.85	
SLV 6	11	0.52	7.04	-5655	59494	177998	2.99	
SLV 7	11	0.52	9.74	-7817	59494	235524	3.96	
SLV 8	11	0.52	10.11	-8113	59494	242957	4.08	
SLV 9	11	0.52	7	-5621	59494	177062	2.98	
SLV 10	11	0.52	7.37	-5918	59494	185306	3.11	
SLV 11	11	0.52	10.06	-8079	59494	242123	4.07	
SLV 12	11	0.52	10.43	-8376	59494	249460	4.19	
SLV 13	11	0.52	8.47	-6803	59494	209292	3.52	
SLV 14	11	0.52	8.81	-7070	59494	216308	3.64	
SLV 15	11	0.52	9.39	-7541	59494	228515	3.84	
SLV 16	11	0.52	9.73	-7807	59494	235286	3.95	

Verifica dei meccanismi locali di collasso con analisi cinematica lineare
accelerazione limite = 196,01; forza di aggancio al piano = 30

combinazione	N top	N base	V orto	alfa0	M*	e*	a0*	
SLV 1	-1696	-8732	70	0.652	7.054	0.897	528	
SLV 2	-1733	-8909	70	0.647	7.083	0.896	525	
SLV 3	-1768	-9238	49	0.648	7.111	0.896	525	
SLV 4	-1804	-9415	48	0.643	7.141	0.895	522	
SLV 5	-1658	-8260	58	0.659	7.024	0.897	534	
SLV 6	-1699	-8458	58	0.654	7.056	0.897	530	
SLV 7	-1896	-9947	-15	0.639	7.216	0.894	520	
SLV 8	-1937	-10144	-15	0.635	7.249	0.894	516	
SLV 9	-1699	-8371	26	0.661	7.056	0.897	535	
SLV 10	-1739	-8568	26	0.656	7.089	0.896	532	
SLV 11	-1937	-10058	-47	0.628	7.249	0.894	511	
SLV 12	-1977	-10255	-47	0.624	7.283	0.893	507	

muratura

combinazione	N top	N base	V orto	alfa0	M*	e*	a0*	
SLV 13	-1831	-9100	-37	0.642	7.163	0.895	522	
SLV 14	-1868	-9277	-38	0.638	7.192	0.894	518	
SLV 15	-1903	-9606	-59	0.63	7.221	0.894	512	
SLV 16	-1939	-9784	-60	0.625	7.251	0.894	509	

Maschio 36
Maschio considerato membratura sismica secondaria
Dati geometrici

X ini.	Y ini.	X fin.	Y fin.	quota i.	quota.s	l	sp.	h netta	h ini.	h fin.	a
135	135	240	135	L2	L3	105	70	460	560	560	

Materiale: Muratura in pietrame consolidata con iniezioni LC1
f medio 30
tau 0.9
E 24000
G 8053.69
Fattore di confidenza 1.35

Verifica a pressoflessione per azioni non sismiche 4.5.6.2 D.M. 14-01-08 (N.T.C.) gammaM 3

comb.	quota	N	M	p	es1	es2	ea	ev	e ver (cm)	Ft	Fl	Nu (daN)	
1	1060	-1711	-10010	1	0	7.98	2.3	0,00	10,28	0,56	0,83	25040	
1	730	-6881	69431	1	0	7.98	2.3	0,00	5,14	0,71	0,72	27686	
1	500	-10651	-29026	1	0	7.98	2.3	0,00	10,28	0,56	0,92	27856	
2	1060	-1931	-10301	1	0	8.03	2.3	0,00	10,33	0,56	0,84	25437	
2	730	-7129	72868	1	0	8.03	2.3	0,00	5,16	0,71	0,71	27553	
2	500	-10882	-29455	1	0	8.03	2.3	0,00	10,33	0,56	0,92	27798	
3	1060	-2240	-10671	1	0	8.08	2.3	0,00	10,38	0,55	0,86	25880	
3	730	-7496	78735	1	0	8.08	2.3	0,00	5,19	0,71	0,71	27319	
3	500	-11204	-30313	1	0	8.08	2.3	0,00	10,38	0,55	0,92	27724	
4	1060	-2152	-10538	1	0	8.07	2.3	0,00	10,37	0,55	0,85	25781	
4	730	-7405	77813	1	0	8.07	2.3	0,00	5,18	0,71	0,71	27330	
4	500	-11112	-30252	1	0	8.07	2.3	0,00	10,37	0,55	0,92	27731	
5	1060	-2262	-10684	1	0	8.09	2.3	0,00	10,39	0,55	0,86	25914	
5	730	-7529	79531	1	0	8.09	2.3	0,00	5,19	0,71	0,71	27278	
5	500	-11227	-30466	1	0	8.09	2.3	0,00	10,39	0,55	0,92	27713	
6	1060	-2361	-10736	1	0	6.96	2.3	0,00	9,26	0,58	0,86	27526	
6	730	-7621	79703	1	0	6.96	2.3	0,00	4,63	0,73	0,71	28306	
6	500	-11319	-31340	1	0	6.96	2.3	0,00	9,26	0,58	0,92	29208	
7	1060	-2581	-11027	1	0	7.09	2.3	0,00	9,39	0,58	0,87	27621	
7	730	-7869	83139	1	0	7.09	2.3	0,00	4,69	0,73	0,71	28125	
7	500	-11549	-31769	1	0	7.09	2.3	0,00	9,39	0,58	0,92	29051	
8	1060	-2890	-11396	1	0	7.23	2.3	0,00	9,53	0,58	0,88	27741	
8	730	-8236	89006	1	0	7.23	2.3	0,00	4,77	0,73	0,70	27840	
8	500	-11872	-32628	1	0	7.23	2.3	0,00	9,53	0,58	0,92	28856	
9	1060	-2802	-11264	1	0	7.19	2.3	0,00	9,49	0,58	0,88	27721	
9	730	-8145	88084	1	0	7.19	2.3	0,00	4,75	0,73	0,70	27868	
9	500	-11780	-32566	1	0	7.19	2.3	0,00	9,49	0,58	0,92	28894	
10	1060	-2912	-11409	1	0	7.24	2.3	0,00	9,54	0,58	0,88	27754	
10	730	-8269	89802	1	0	7.24	2.3	0,00	4,77	0,73	0,70	27797	
10	500	-11895	-32781	1	0	7.24	2.3	0,00	9,54	0,58	0,92	28838	
11	1060	-2224	-13013	1	0	7.98	2.3	0,00	10,28	0,56	0,83	25040	
11	730	-8946	90261	1	0	7.98	2.3	0,00	5,14	0,71	0,72	27686	
11	500	-13846	-37734	1	0	7.98	2.3	0,00	10,28	0,56	0,92	27856	
12	1060	-2444	-13304	1	0	8.02	2.3	0,00	10,32	0,56	0,84	25354	
12	730	-9194	93697	1	0	8.02	2.3	0,00	5,16	0,71	0,72	27582	
12	500	-14077	-38163	1	0	8.02	2.3	0,00	10,32	0,56	0,92	27810	
13	1060	-2753	-13674	1	0	8.06	2.3	0,00	10,36	0,55	0,85	25724	
13	730	-9560	99564	1	0	8.06	2.3	0,00	5,18	0,71	0,71	27395	
13	500	-14399	-39021	1	0	8.06	2.3	0,00	10,36	0,55	0,92	27748	
14	1060	-2665	-13541	1	0	8.05	2.3	0,00	10,35	0,55	0,85	25639	
14	730	-9470	98642	1	0	8.05	2.3	0,00	5,18	0,71	0,71	27405	
14	500	-14307	-38960	1	0	8.05	2.3	0,00	10,35	0,55	0,92	27755	
15	1060	-2775	-13687	1	0	8.07	2.3	0,00	10,37	0,55	0,85	25753	
15	730	-9594	100360	1	0	8.07	2.3	0,00	5,18	0,71	0,71	27363	
15	500	-14422	-39174	1	0	8.07	2.3	0,00	10,37	0,55	0,92	27739	
16	1060	-2874	-13739	1	0	7.14	2.3	0,00	9,44	0,58	0,86	27073	
16	730	-9685	100532	1	0	7.14	2.3	0,00	4,72	0,73	0,71	28205	
16	500	-14514	-40048	1	0	7.14	2.3	0,00	9,44	0,58	0,92	28968	
17	1060	-3094	-14030	1	0	7.24	2.3	0,00	9,54	0,58	0,87	27184	
17	730	-9933	103969	1	0	7.24	2.3	0,00	4,77	0,73	0,71	28067	
17	500	-14745	-40477	1	0	7.24	2.3	0,00	9,54	0,58	0,92	28854	
18	1060	-3403	-14399	1	0	7.34	2.3	0,00	9,64	0,57	0,87	27325	
18	730	-10300	109836	1	0	7.34	2.3	0,00	4,82	0,72	0,71	27842	
18	500	-15067	-41335	1	0	7.34	2.3	0,00	9,64	0,57	0,92	28707	
19	1060	-3316	-14267	1	0	7.31	2.3	0,00	9,61	0,57	0,87	27298	
19	730	-10209	108914	1	0	7.31	2.3	0,00	4,81	0,72	0,71	27864	
19	500	-14975	-41274	1	0	7.31	2.3	0,00	9,61	0,57	0,92	28736	
20	1060	-3426	-14412	1	0	7.35	2.3	0,00	9,65	0,57	0,87	27339	
20	730	-10333	110632	1	0	7.35	2.3	0,00	4,82	0,72	0,71	27808	
20	500	-15090	-41489	1	0	7.35	2.3	0,00	9,65	0,57	0,92	28692	

Verifica a taglio con rottura per fessurazione diagonale per azioni non sismiche Circ.617 C8.7.1.5 gammaM 3

comb.	quota	Vd	N	ftd	b	sigma0	Vu	c.s.	
SLU 1	750	40	-5512	0.33	1.5	0.75	2945	72.98	
SLU 1	600	-1	-8494	0.33	1.5	1.16	3452	100	
SLU 2	750	41	-5727	0.33	1.5	0.78	2984	73.14	
SLU 2	600	-1	-8735	0.33	1.5	1.19	3490	100	
SLU 3	750	41	-6044	0.33	1.5	0.82	3041	73.66	
SLU 3	600	-1	-9094	0.33	1.5	1.24	3546	100	
SLU 4	750	41	-5965	0.33	1.5	0.81	3027	73.75	
SLU 4	600	-1	-9008	0.33	1.5	1.23	3532	100	
SLU 5	750	41	-6073	0.33	1.5	0.83	3046	73.81	

comb.	quota	Vd	N	ftd	b	sigma0	Vu	c.s.	
SLU 5	600	-1	-9128	0.33	1.5	1.24	3551	100	
SLU 6	750	42	-6159	0.33	1.5	0.84	3062	73.08	
SLU 6	600	-1	-9214	0.33	1.5	1.25	3564	100	
SLU 7	750	42	-6374	0.33	1.5	0.87	3100	73.19	
SLU 7	600	-1	-9456	0.33	1.5	1.29	3601	100	
SLU 8	750	43	-6691	0.33	1.5	0.91	3155	73.64	
SLU 8	600	-1	-9815	0.33	1.5	1.34	3655	100	
SLU 9	750	43	-6611	0.33	1.5	0.9	3141	73.75	
SLU 9	600	-1	-9728	0.33	1.5	1.32	3642	100	
SLU 10	750	43	-6719	0.33	1.5	0.91	3160	73.79	
SLU 10	600	-1	-9849	0.33	1.5	1.34	3660	100	
SLU 11	750	52	-7166	0.33	1.5	0.97	3236	61.7	
SLU 11	600	-2	-11042	0.33	1.5	1.5	3833	100	
SLU 12	750	53	-7381	0.33	1.5	1	3272	61.85	
SLU 12	600	-2	-11283	0.33	1.5	1.54	3867	100	
SLU 13	750	53	-7698	0.33	1.5	1.05	3324	62.26	
SLU 13	600	-2	-11643	0.33	1.5	1.58	3917	100	
SLU 14	750	53	-7619	0.33	1.5	1.04	3311	62.3	
SLU 14	600	-2	-11556	0.33	1.5	1.57	3905	100	
SLU 15	750	53	-7726	0.33	1.5	1.05	3329	62.37	
SLU 15	600	-2	-11676	0.33	1.5	1.59	3922	100	
SLU 16	750	54	-7813	0.33	1.5	1.06	3343	61.91	
SLU 16	600	-2	-11763	0.33	1.5	1.6	3934	100	
SLU 17	750	54	-8028	0.33	1.5	1.09	3378	62.03	
SLU 17	600	-2	-12004	0.33	1.5	1.63	3967	100	
SLU 18	750	55	-8344	0.33	1.5	1.14	3428	62.4	
SLU 18	600	-2	-12363	0.33	1.5	1.68	4016	100	
SLU 19	750	55	-8265	0.33	1.5	1.12	3416	62.45	
SLU 19	600	-2	-12277	0.33	1.5	1.67	4004	100	
SLU 20	750	55	-8373	0.33	1.5	1.14	3433	62.5	
SLU 20	600	-2	-12397	0.33	1.5	1.69	4021	100	

Verifica a pressoflessione fuori piano D.M. 14-01-08 (N.T.C.)
quota 730 Ta 0.06 Wa 0.15 denominatore 8

comb.	fd	Sa	x	N	M	Mc	c.s.	
SLV 1	11	0.52	7.4	-7336	73493	229615	3.12	
SLV 2	11	0.52	7.53	-7468	73493	233272	3.17	
SLV 3	11	0.52	7.07	-7009	73493	220557	3	
SLV 4	11	0.52	7.2	-7142	73493	224258	3.05	
SLV 5	11	0.52	7.94	-7877	73493	244402	3.33	
SLV 6	11	0.52	8.09	-8025	73493	248393	3.38	
SLV 7	11	0.52	6.85	-6789	73493	214386	2.92	
SLV 8	11	0.52	7	-6937	73493	218539	2.97	
SLV 9	11	0.52	8.09	-8021	73493	248289	3.38	
SLV 10	11	0.52	8.24	-8169	73493	252258	3.43	
SLV 11	11	0.52	6.99	-6933	73493	218431	2.97	
SLV 12	11	0.52	7.14	-7081	73493	222562	3.03	
SLV 13	11	0.52	7.88	-7816	73493	242752	3.3	
SLV 14	11	0.52	8.02	-7949	73493	246344	3.35	
SLV 15	11	0.52	7.55	-7490	73493	233852	3.18	
SLV 16	11	0.52	7.69	-7622	73493	237488	3.23	

Verifica dei meccanismi locali di collasso con analisi cinematica lineare
accelerazione limite = 196,01; forza di aggancio al piano = 30

combinazione	N top	N base	V orto	alfa0	M*	e*	a0*	
SLV 1	-2245	-11678	33	0.646	8.834	0.895	525	
SLV 2	-2251	-11870	33	0.646	8.839	0.895	524	
SLV 3	-2237	-11743	-17	0.65	8.828	0.895	527	
SLV 4	-2243	-11935	-17	0.649	8.833	0.895	527	
SLV 5	-2245	-11159	107	0.634	8.834	0.895	515	
SLV 6	-2251	-11373	106	0.633	8.839	0.895	514	
SLV 7	-2220	-11375	-60	0.644	8.814	0.895	523	
SLV 8	-2227	-11588	-60	0.643	8.819	0.895	522	
SLV 9	-2238	-10789	120	0.632	8.828	0.895	513	
SLV 10	-2245	-11002	119	0.632	8.834	0.895	513	
SLV 11	-2213	-11004	-47	0.647	8.808	0.895	525	
SLV 12	-2220	-11218	-47	0.646	8.814	0.895	525	
SLV 13	-2222	-10442	77	0.641	8.815	0.895	520	
SLV 14	-2227	-10634	76	0.641	8.82	0.895	520	
SLV 15	-2214	-10507	27	0.65	8.809	0.895	528	
SLV 16	-2220	-10699	26	0.65	8.814	0.895	527	

Maschio 37
Maschio considerato membratura sismica secondaria
Dati geometrici

X ini.	Y ini.	X fin.	Y fin.	quota i.	quota.s	l	sp.	h netta	h ini.	h fin.	a
240	1070	135	1070	L2	L3	105	45	460	560	560	

Materiale: Muratura in pietrame consolidata con iniezioni LC1
f medio 30
tau 0.9
E 24000
G 8053.69
Fattore di confidenza 1.35

Verifica a pressoflessione per azioni non sismiche 4.5.6.2 D.M. 14-01-08 (N.T.C.) gammaM 3

comb.	quota	N	M	p	es1	es2	ea	ev	e ver (cm)	Ft	Fl	Nu (daN)	
1	1060	-2215	-1721	1	0	0	2.3	0,00	2,30	0,70	0,98	23941	
1	730	-6386	-25922	1	0	0	2.3	0,00	2,30	0,70	0,88	21551	
1	500	-9333	-41438	1	0	0	2.3	0,00	2,30	0,70	0,87	21274	
2	1060	-2537	-2574	1	0	0	2.3	0,00	2,30	0,70	0,97	23768	
2	730	-6770	-28040	1	0	0	2.3	0,00	2,30	0,70	0,88	21491	
2	500	-9735	-43901	1	0	0	2.3	0,00	2,30	0,70	0,87	21223	

muratura

comb.	quota	N	M	p	es1	es2	ea	ev	e ver (cm)	Ft	Fl	Nu (daN)	
3	1060	-2985	-3662	1	0	0	2.3	0,00	2,30	0,70	0,96	23614	
3	730	-7315	-31214	1	0	0	2.3	0,00	2,30	0,70	0,87	21400	
3	500	-10308	-47443	1	0	0	2.3	0,00	2,30	0,70	0,86	21156	
4	1060	-2855	-3275	1	0	0	2.3	0,00	2,30	0,70	0,97	23672	
4	730	-7166	-30456	1	0	0	2.3	0,00	2,30	0,70	0,87	21412	
4	500	-10152	-46497	1	0	0	2.3	0,00	2,30	0,70	0,86	21172	
5	1060	-3016	-3701	1	0	0	2.3	0,00	2,30	0,70	0,96	23613	
5	730	-7357	-31515	1	0	0	2.3	0,00	2,30	0,70	0,87	21388	
5	500	-10353	-47729	1	0	0	2.3	0,00	2,30	0,70	0,86	21150	
6	1060	-2713	-2338	1	0	0	2.3	0,00	2,30	0,70	0,97	23879	
6	730	-6997	-27998	1	0	0	2.3	0,00	2,30	0,70	0,88	21593	
6	500	-9959	-44673	1	0	0	2.3	0,00	2,30	0,70	0,87	21241	
7	1060	-3034	-3191	1	0	0	2.3	0,00	2,30	0,70	0,97	23741	
7	730	-7381	-30116	1	0	0	2.3	0,00	2,30	0,70	0,88	21536	
7	500	-10361	-47136	1	0	0	2.3	0,00	2,30	0,70	0,86	21194	
8	1060	-3482	-4279	1	0	0	2.3	0,00	2,30	0,70	0,96	23612	
8	730	-7926	-33290	1	0	0	2.3	0,00	2,30	0,70	0,88	21449	
8	500	-10934	-50678	1	0	0	2.3	0,00	2,30	0,70	0,86	21132	
9	1060	-3352	-3892	1	0	0	2.3	0,00	2,30	0,70	0,97	23662	
9	730	-7777	-32532	1	0	0	2.3	0,00	2,30	0,70	0,88	21461	
9	500	-10778	-49732	1	0	0	2.3	0,00	2,30	0,70	0,86	21147	
10	1060	-3513	-4318	1	0	0	2.3	0,00	2,30	0,70	0,96	23612	
10	730	-7968	-33591	1	0	0	2.3	0,00	2,30	0,70	0,87	21437	
10	500	-10979	-50964	1	0	0	2.3	0,00	2,30	0,70	0,86	21127	
11	1060	-2880	-2237	1	0	0	2.3	0,00	2,30	0,70	0,98	23941	
11	730	-8302	-33698	1	0	0	2.3	0,00	2,30	0,70	0,88	21551	
11	500	-12133	-53869	1	0	0	2.3	0,00	2,30	0,70	0,87	21274	
12	1060	-3201	-3090	1	0	0	2.3	0,00	2,30	0,70	0,97	23804	
12	730	-8685	-35817	1	0	0	2.3	0,00	2,30	0,70	0,88	21504	
12	500	-12535	-56333	1	0	0	2.3	0,00	2,30	0,70	0,87	21234	
13	1060	-3649	-4178	1	0	0	2.3	0,00	2,30	0,70	0,97	23673	
13	730	-9231	-38991	1	0	0	2.3	0,00	2,30	0,70	0,87	21431	
13	500	-13108	-59874	1	0	0	2.3	0,00	2,30	0,70	0,86	21181	
14	1060	-3520	-3791	1	0	0	2.3	0,00	2,30	0,70	0,97	23723	
14	730	-9081	-38233	1	0	0	2.3	0,00	2,30	0,70	0,87	21441	
14	500	-12952	-58929	1	0	0	2.3	0,00	2,30	0,70	0,86	21194	
15	1060	-3680	-4217	1	0	0	2.3	0,00	2,30	0,70	0,97	23673	
15	730	-9273	-39292	1	0	0	2.3	0,00	2,30	0,70	0,87	21422	
15	500	-13153	-60161	1	0	0	2.3	0,00	2,30	0,70	0,86	21176	
16	1060	-3377	-2854	1	0	0	2.3	0,00	2,30	0,70	0,97	23892	
16	730	-8913	-35774	1	0	0	2.3	0,00	2,30	0,70	0,88	21584	
16	500	-12759	-57104	1	0	0	2.3	0,00	2,30	0,70	0,87	21248	
17	1060	-3699	-3707	1	0	0	2.3	0,00	2,30	0,70	0,97	23777	
17	730	-9296	-37893	1	0	0	2.3	0,00	2,30	0,70	0,88	21539	
17	500	-13161	-59568	1	0	0	2.3	0,00	2,30	0,70	0,87	21211	
18	1060	-4147	-4795	1	0	0	2.3	0,00	2,30	0,70	0,97	23665	
18	730	-9842	-41066	1	0	0	2.3	0,00	2,30	0,70	0,88	21469	
18	500	-13734	-63109	1	0	0	2.3	0,00	2,30	0,70	0,86	21161	
19	1060	-4017	-4408	1	0	0	2.3	0,00	2,30	0,70	0,97	23708	
19	730	-9692	-40308	1	0	0	2.3	0,00	2,30	0,70	0,88	21479	
19	500	-13578	-62163	1	0	0	2.3	0,00	2,30	0,70	0,86	21173	
20	1060	-4178	-4834	1	0	0	2.3	0,00	2,30	0,70	0,97	23664	
20	730	-9884	-41368	1	0	0	2.3	0,00	2,30	0,70	0,88	21459	
20	500	-13779	-63395	1	0	0	2.3	0,00	2,30	0,70	0,86	21157	

Verifica a taglio con rottura per fessurazione diagonale per azioni non sismiche Circ.617 C8.7.1.5 gammaM 3

comb.	quota	Vd	N	ftd	b	sigma0	Vu	c.s.	
SLU 1	650	-257	-7499	0.33	1.5	1.59	2520	9.81	
SLU 1	500	7	-9333	0.33	1.5	1.98	2763	100	
SLU 2	650	-265	-7900	0.33	1.5	1.67	2575	9.73	
SLU 2	500	8	-9735	0.33	1.5	2.06	2814	100	
SLU 3	650	-274	-8469	0.33	1.5	1.79	2652	9.69	
SLU 3	500	8	-10308	0.33	1.5	2.18	2884	100	
SLU 4	650	-270	-8312	0.33	1.5	1.76	2631	9.75	
SLU 4	500	8	-10152	0.33	1.5	2.15	2865	100	
SLU 5	650	-274	-8512	0.33	1.5	1.8	2657	9.71	
SLU 5	500	8	-10353	0.33	1.5	2.19	2890	100	
SLU 6	650	-273	-8142	0.33	1.5	1.72	2608	9.54	
SLU 6	500	8	-9959	0.33	1.5	2.11	2841	100	
SLU 7	650	-281	-8543	0.33	1.5	1.81	2661	9.47	
SLU 7	500	8	-10361	0.33	1.5	2.19	2891	100	
SLU 8	650	-290	-9112	0.33	1.5	1.93	2735	9.43	
SLU 8	500	9	-10934	0.33	1.5	2.31	2959	100	
SLU 9	650	-286	-8954	0.33	1.5	1.9	2715	9.48	
SLU 9	500	9	-10778	0.33	1.5	2.28	2941	100	
SLU 10	650	-290	-9155	0.33	1.5	1.94	2741	9.45	
SLU 10	500	9	-10979	0.33	1.5	2.32	2964	100	
SLU 11	650	-334	-9749	0.33	1.5	2.06	2815	8.43	
SLU 11	500	10	-12133	0.33	1.5	2.57	3098	100	
SLU 12	650	-342	-10150	0.33	1.5	2.15	2865	8.39	
SLU 12	500	10	-12535	0.33	1.5	2.65	3143	100	
SLU 13	650	-351	-10719	0.33	1.5	2.27	2934	8.37	
SLU 13	500	10	-13108	0.33	1.5	2.77	3206	100	
SLU 14	650	-347	-10561	0.33	1.5	2.24	2915	8.4	
SLU 14	500	10	-12952	0.33	1.5	2.74	3189	100	
SLU 15	650	-351	-10762	0.33	1.5	2.28	2939	8.38	
SLU 15	500	10	-13153	0.33	1.5	2.78	3211	100	
SLU 16	650	-350	-10391	0.33	1.5	2.2	2894	8.26	
SLU 16	500	10	-12759	0.33	1.5	2.7	3168	100	
SLU 17	650	-358	-10793	0.33	1.5	2.28	2942	8.22	
SLU 17	500	10	-13161	0.33	1.5	2.79	3212	100	
SLU 18	650	-367	-11362	0.33	1.5	2.4	3009	8.2	
SLU 18	500	11	-13734	0.33	1.5	2.91	3274	100	
SLU 19	650	-363	-11204	0.33	1.5	2.37	2991	8.23	
SLU 19	500	11	-13578	0.33	1.5	2.87	3257	100	
SLU 20	650	-367	-11405	0.33	1.5	2.41	3014	8.21	
SLU 20	500	11	-13779	0.33	1.5	2.92	3278	100	

Verifica a pressoflessione fuori piano D.M. 14-01-08 (N.T.C.)

quota 730 Ta 0.1 Wa 0.1 denominatore 8

comb.	fd	Sa	x	N	M	Mc	c.s.	
SLV 1	11	0.59	6.72	-6664	54313	127548	2.35	
SLV 2	11	0.59	6.76	-6708	54313	128249	2.36	
SLV 3	11	0.59	6.76	-6707	54313	128233	2.36	
SLV 4	11	0.59	6.81	-6752	54313	128931	2.37	
SLV 5	11	0.59	6.84	-6780	54313	129368	2.38	
SLV 6	11	0.59	6.89	-6829	54313	130142	2.4	
SLV 7	11	0.59	6.98	-6924	54313	131624	2.42	
SLV 8	11	0.59	7.03	-6974	54313	132391	2.44	
SLV 9	11	0.59	6.98	-6924	54313	131625	2.42	
SLV 10	11	0.59	7.03	-6974	54313	132392	2.44	
SLV 11	11	0.59	7.13	-7069	54313	133861	2.46	
SLV 12	11	0.59	7.18	-7119	54313	134620	2.48	
SLV 13	11	0.59	7.21	-7147	54313	135047	2.49	
SLV 14	11	0.59	7.25	-7191	54313	135725	2.5	
SLV 15	11	0.59	7.25	-7190	54313	135710	2.5	
SLV 16	11	0.59	7.3	-7234	54313	136386	2.51	

Verifica dei meccanismi locali di collasso con analisi cinematica lineare
accelerazione limite = 196,01; forza di aggancio al piano = 30

combinazione	N top	N base	V orto	alfa0	M*	e*	a0*	
SLV 1	-2554	-9791	-21	0.705	6.648	0.889	576	
SLV 2	-2585	-9810	-23	0.701	6.676	0.889	573	
SLV 3	-2587	-9830	6	0.704	6.678	0.889	575	
SLV 4	-2618	-9850	5	0.7	6.706	0.889	572	
SLV 5	-2576	-9809	-49	0.697	6.668	0.889	570	
SLV 6	-2610	-9831	-50	0.692	6.699	0.889	566	
SLV 7	-2686	-9941	44	0.684	6.769	0.889	559	
SLV 8	-2721	-9963	43	0.68	6.801	0.889	555	
SLV 9	-2629	-9865	-44	0.691	6.717	0.889	565	
SLV 10	-2663	-9887	-45	0.686	6.748	0.889	561	
SLV 11	-2739	-9997	49	0.676	6.818	0.889	552	
SLV 12	-2774	-10019	48	0.672	6.85	0.889	549	
SLV 13	-2732	-9978	-6	0.686	6.811	0.889	560	
SLV 14	-2762	-9998	-7	0.681	6.84	0.889	557	
SLV 15	-2765	-10018	22	0.678	6.842	0.889	554	
SLV 16	-2796	-10037	21	0.675	6.87	0.889	551	

Maschio 38
Dati geometrici

X ini.	Y ini.	X fin.	Y fin.	quota i.	quota.s	l	sp.	h netta	h ini.	h fin.	a
680	1070	340	1070	L2	L3	340	45	460	560	560	

Materiale: Muratura in pietrame consolidata con iniezioni LC1
f medio 30
tau 0.9
E 24000
G 8053.69
Fattore di confidenza 1.35

Verifica a pressoflessione per azioni non sismiche 4.5.6.2 D.M. 14-01-08 (N.T.C.) gammaM 3

comb.	quota	N	M	p	es1	es2	ea	ev	e ver (cm)	Ft	Fl	Nu (daN)	
1	1060	-9892	169657	1	0	0	2.3	0,00	2,30	0,70	0,84	66866	
1	730	-24230	136002	1	0	0	2.3	0,00	2,30	0,70	0,95	75269	
1	500	-31525	120750	1	0	0	2.3	0,00	2,30	0,70	0,96	76567	
2	1060	-11133	180868	1	0	0	2.3	0,00	2,30	0,70	0,85	67526	
2	730	-25668	150297	1	0	0	2.3	0,00	2,30	0,70	0,95	75092	
2	500	-32834	133465	1	0	0	2.3	0,00	2,30	0,70	0,96	76396	
3	1060	-12886	192982	1	0	0	2.3	0,00	2,30	0,70	0,86	68450	
3	730	-27979	183618	1	0	0	2.3	0,00	2,30	0,70	0,94	74577	
3	500	-35334	172692	1	0	0	2.3	0,00	2,30	0,70	0,96	75797	
4	1060	-12395	186962	1	0	0	2.3	0,00	2,30	0,70	0,86	68372	
4	730	-27531	183604	1	0	0	2.3	0,00	2,30	0,70	0,94	74500	
4	500	-35096	176789	1	0	0	2.3	0,00	2,30	0,70	0,95	75688	
5	1060	-13016	192568	1	0	0	2.3	0,00	2,30	0,70	0,86	68582	
5	730	-28250	190751	1	0	0	2.3	0,00	2,30	0,70	0,94	74439	
5	500	-35751	183146	1	0	0	2.3	0,00	2,30	0,70	0,95	75626	
6	1060	-11769	182564	1	0	0	2.3	0,00	2,30	0,70	0,86	68060	
6	730	-26695	166141	1	0	0	2.3	0,00	2,30	0,70	0,94	74824	
6	500	-34156	158455	1	0	0	2.3	0,00	2,30	0,70	0,96	75978	
7	1060	-13011	193775	1	0	0	2.3	0,00	2,30	0,70	0,86	68511	
7	730	-28133	180436	1	0	0	2.3	0,00	2,30	0,70	0,94	74686	
7	500	-35464	171170	1	0	0	2.3	0,00	2,30	0,70	0,96	75841	
8	1060	-14763	205888	1	0	0	2.3	0,00	2,30	0,70	0,87	69201	
8	730	-30444	213757	1	0	0	2.3	0,00	2,30	0,70	0,94	74243	
8	500	-37964	210398	1	0	0	2.3	0,00	2,30	0,70	0,95	75320	
9	1060	-14273	199869	1	0	0	2.3	0,00	2,30	0,70	0,87	69159	
9	730	-29997	213743	1	0	0	2.3	0,00	2,30	0,70	0,93	74167	
9	500	-37727	214494	1	0	0	2.3	0,00	2,30	0,70	0,95	75216	
10	1060	-14893	205474	1	0	0	2.3	0,00	2,30	0,70	0,87	69310	
10	730	-30716	220890	1	0	0	2.3	0,00	2,30	0,70	0,93	74119	
10	500	-38381	220852	1	0	0	2.3	0,00	2,30	0,70	0,95	75166	
11	1060	-12859	220554	1	0	0	2.3	0,00	2,30	0,70	0,84	66866	
11	730	-31498	176803	1	0	0	2.3	0,00	2,30	0,70	0,95	75269	
11	500	-40983	156975	1	0	0	2.3	0,00	2,30	0,70	0,96	76567	
12	1060	-14101	231765	1	0	0	2.3	0,00	2,30	0,70	0,85	67387	
12	730	-32937	191098	1	0	0	2.3	0,00	2,30	0,70	0,95	75131	
12	500	-42291	169690	1	0	0	2.3	0,00	2,30	0,70	0,96	76434	
13	1060	-15853	243879	1	0	0	2.3	0,00	2,30	0,70	0,86	68154	
13	730	-35248	224419	1	0	0	2.3	0,00	2,30	0,70	0,94	74720	
13	500	-44791	208917	1	0	0	2.3	0,00	2,30	0,70	0,96	75960	
14	1060	-15363	237859	1	0	0	2.3	0,00	2,30	0,70	0,86	68081	
14	730	-34800	224405	1	0	0	2.3	0,00	2,30	0,70	0,94	74660	
14	500	-44554	213014	1	0	0	2.3	0,00	2,30	0,70	0,96	75875	

muratura

comb.	quota	N	M	p	es1	es2	ea	ev	e ver (cm)	Ft	Fl	Nu (daN)	
15	1060	-15983	243465	1	0	0	2.3	0,00	2,30	0,70	0,86	68264	
15	730	-35519	231552	1	0	0	2.3	0,00	2,30	0,70	0,94	74609	
15	500	-45208	219371	1	0	0	2.3	0,00	2,30	0,70	0,96	75823	
16	1060	-14737	233461	1	0	0	2.3	0,00	2,30	0,70	0,85	67820	
16	730	-33964	206942	1	0	0	2.3	0,00	2,30	0,70	0,94	74919	
16	500	-43613	194680	1	0	0	2.3	0,00	2,30	0,70	0,96	76106	
17	1060	-15978	244672	1	0	0	2.3	0,00	2,30	0,70	0,86	68205	
17	730	-35402	221237	1	0	0	2.3	0,00	2,30	0,70	0,94	74805	
17	500	-44922	207395	1	0	0	2.3	0,00	2,30	0,70	0,96	75994	
18	1060	-17731	256785	1	0	0	2.3	0,00	2,30	0,70	0,87	68810	
18	730	-37713	254558	1	0	0	2.3	0,00	2,30	0,70	0,94	74441	
18	500	-47422	246622	1	0	0	2.3	0,00	2,30	0,70	0,95	75569	
19	1060	-17240	250766	1	0	0	2.3	0,00	2,30	0,70	0,87	68764	
19	730	-37265	254544	1	0	0	2.3	0,00	2,30	0,70	0,94	74382	
19	500	-47185	250719	1	0	0	2.3	0,00	2,30	0,70	0,95	75487	
20	1060	-17861	256371	1	0	0	2.3	0,00	2,30	0,70	0,87	68904	
20	730	-37985	261691	1	0	0	2.3	0,00	2,30	0,70	0,94	74339	
20	500	-47839	257077	1	0	0	2.3	0,00	2,30	0,70	0,95	75443	

Verifica a taglio con rottura per fessurazione diagonale per azioni non sismiche Circ.617 C8.7.1.5 gammaM 3

comb.	quota	Vd	N	ftd	b	sigma0	Vu	c.s.	
SLU 1	650	-1898	-27490	0.33	1.35	1.8	9529	5.02	
SLU 1	500	-1658	-31525	0.33	1.35	2.06	10102	6.09	
SLU 2	650	-2032	-28958	0.33	1.35	1.89	9741	4.79	
SLU 2	500	-1783	-32834	0.33	1.35	2.15	10281	5.77	
SLU 3	650	-1980	-31405	0.33	1.35	2.05	10085	5.09	
SLU 3	500	-1715	-35334	0.33	1.35	2.31	10614	6.19	
SLU 4	650	-1823	-30986	0.33	1.35	2.03	10027	5.5	
SLU 4	500	-1561	-35096	0.33	1.35	2.29	10583	6.78	
SLU 5	650	-1891	-31719	0.33	1.35	2.07	10128	5.36	
SLU 5	500	-1624	-35751	0.33	1.35	2.34	10669	6.57	
SLU 6	650	-1856	-30096	0.33	1.35	1.97	9903	5.34	
SLU 6	500	-1599	-34156	0.33	1.35	2.23	10458	6.54	
SLU 7	650	-1991	-31563	0.33	1.35	2.06	10107	5.08	
SLU 7	500	-1724	-35464	0.33	1.35	2.32	10631	6.17	
SLU 8	650	-1938	-34010	0.33	1.35	2.22	10439	5.39	
SLU 8	500	-1656	-37964	0.33	1.35	2.48	10954	6.62	
SLU 9	650	-1781	-33591	0.33	1.35	2.2	10383	5.83	
SLU 9	500	-1502	-37727	0.33	1.35	2.47	10924	7.27	
SLU 10	650	-1849	-34325	0.33	1.35	2.24	10481	5.67	
SLU 10	500	-1564	-38381	0.33	1.35	2.51	11007	7.04	
SLU 11	650	-2467	-35737	0.33	1.35	2.34	10667	4.32	
SLU 11	500	-2156	-40983	0.33	1.35	2.68	11331	5.26	
SLU 12	650	-2602	-37205	0.33	1.35	2.43	10857	4.17	
SLU 12	500	-2281	-42291	0.33	1.35	2.76	11491	5.04	
SLU 13	650	-2550	-39652	0.33	1.35	2.59	11166	4.38	
SLU 13	500	-2213	-44791	0.33	1.35	2.93	11790	5.33	
SLU 14	650	-2393	-39233	0.33	1.35	2.56	11114	4.65	
SLU 14	500	-2059	-44554	0.33	1.35	2.91	11762	5.71	
SLU 15	650	-2460	-39966	0.33	1.35	2.61	11206	4.56	
SLU 15	500	-2121	-45208	0.33	1.35	2.95	11839	5.58	
SLU 16	650	-2425	-38343	0.33	1.35	2.51	11002	4.54	
SLU 16	500	-2097	-43613	0.33	1.35	2.85	11650	5.56	
SLU 17	650	-2560	-39810	0.33	1.35	2.6	11186	4.37	
SLU 17	500	-2221	-44922	0.33	1.35	2.94	11806	5.31	
SLU 18	650	-2508	-42257	0.33	1.35	2.76	11487	4.58	
SLU 18	500	-2153	-47422	0.33	1.35	3.1	12097	5.62	
SLU 19	650	-2351	-41838	0.33	1.35	2.73	11436	4.86	
SLU 19	500	-1999	-47185	0.33	1.35	3.08	12070	6.04	
SLU 20	650	-2418	-42572	0.33	1.35	2.78	11525	4.77	
SLU 20	500	-2062	-47839	0.33	1.35	3.13	12145	5.89	

Verifica a pressoflessione nel piano (7.8.2.2) e taglio con rottura per fessurazione diagonale (C8.7.1.5), gammaM = 2

comb.	quota	N	V par	V orto	M	M orto	N/(l*sp)	N/(l'*sp)	Mu	l'	fvd	Vt scorr.	Vt fess.diag.	
SLV 1	500	-39027	5060	260	664319	-18942	2.55	2.55	4842712	340	0.84	12905	13967	
SLV 1	1060	-11389	-2057	-83	249708	41	0.74	0.74	1783508	340	0.48	7378	8920	
SLV 2	500	-38352	4774	260	610032	-18912	2.51	2.51	4789421	340	0.83	12770	13866	
SLV 2	1060	-11396	-2363	-84	249376	26	0.74	0.74	1784514	340	0.48	7379	8922	
SLV 3	500	-39537	5383	-76	747205	9768	2.58	2.58	4882289	340	0.85	13007	14043	
SLV 3	1060	-11583	-1803	-10	219605	-26	0.76	0.76	1811311	340	0.48	7417	8966	
SLV 4	500	-38862	5098	-77	692918	9799	2.54	2.54	4829808	340	0.84	12872	13942	
SLV 4	1060	-11590	-2109	-11	219272	-41	0.76	0.76	1812314	340	0.48	7418	8967	
SLV 5	500	-35004	24	596	205637	-49416	2.29	2.29	4509178	340	0.79	12101	13352	
SLV 5	1060	-11270	1135	-136	247910	105	0.74	0.74	1766439	340	0.48	7354	8892	
SLV 6	500	-34252	-294	596	145181	-49382	2.24	2.24	4442649	340	0.78	11950	13233	
SLV 6	1060	-11278	794	-136	247540	88	0.74	0.74	1767562	340	0.48	7356	8894	
SLV 7	500	-36705	1102	-525	481923	46286	2.4	2.4	4654818	340	0.81	12441	13615	
SLV 7	1060	-11918	1983	106	147565	-119	0.78	0.78	1858953	340	0.49	7484	9043	
SLV 8	500	-35953	784	-526	421467	46320	2.35	2.35	4591297	340	0.8	12291	13499	
SLV 8	1060	-11926	1642	105	147195	-136	0.78	0.78	1860063	340	0.49	7485	9045	
SLV 9	500	-32033	-3983	547	-107278	-46825	2.09	2.09	4238418	340	0.75	11507	12878	
SLV 9	1060	-11363	4111	-108	216250	92	0.74	0.74	1779736	340	0.48	7373	8914	
SLV 10	500	-31281	-4301	547	-167734	-46791	2.04	2.04	4166635	340	0.74	11356	12756	
SLV 10	1060	-11370	3770	-109	215879	75	0.74	0.74	1780857	340	0.48	7374	8916	
SLV 11	500	-33734	-2905	-574	169009	48877	2.2	2.2	4395947	340	0.77	11847	13151	
SLV 11	1060	-12011	4959	133	115905	-133	0.79	0.79	1872108	340	0.49	7502	9065	
SLV 12	500	-32982	-3222	-574	108552	48911	2.16	2.16	4327171	340	0.76	11696	13031	
SLV 12	1060	-12019	4618	132	115535	-149	0.79	0.79	1873217	340	0.49	7504	9066	
SLV 13	500	-29124	-8297	98	-378729	-10304	1.9	1.9	3953155	340	0.71	10925	12397	
SLV 13	1060	-11698	7862	8	144173	-3	0.76	0.76	1827665	340	0.49	7440	8992	
SLV 14	500	-28449	-8582	98	-433016	-10273	1.86	1.86	3884138	340	0.71	10790	12283	
SLV 14	1060	-11705	7556	7	143840	-18	0.77	0.77	1828666	340	0.49	7441	8994	
SLV 15	500	-29634	-7973	-238	-295843	18407	1.94	1.94	4004621	340	0.72	11027	12483	
SLV 15	1060	-11892	8116	80	114069	-70	0.78	0.78	1855327	340	0.49	7478	9037	
SLV 16	500	-28959	-8258	-238	-350130	18437	1.89	1.89	3936414	340	0.71	10892	12369	
SLV 16	1060	-11899	7810	80	113737	-85	0.78	0.78	1856325	340	0.49	7480	9039	

Verifica a pressoflessione fuori piano D.M. 14-01-08 (N.T.C.)
quota 730 Ta 0 Wa 0.1 denominatore 8

comb.	fd	Sa	x	N	M	Mc	c.s.	
SLV 1	11	0.39	7.89	-25324	116507	469929	4.03	
SLV 2	11	0.39	7.83	-25138	116507	467215	4.01	
SLV 3	11	0.39	8.38	-26916	116507	492802	4.23	
SLV 4	11	0.39	8.32	-26731	116507	490180	4.21	
SLV 5	11	0.39	7.42	-23831	116507	447770	3.84	
SLV 6	11	0.39	7.36	-23625	116507	444650	3.82	
SLV 7	11	0.39	9.07	-29138	116507	523410	4.49	
SLV 8	11	0.39	9.01	-28932	116507	520632	4.47	
SLV 9	11	0.39	7.52	-24135	116507	452336	3.88	
SLV 10	11	0.39	7.45	-23928	116507	449236	3.86	
SLV 11	11	0.39	9.17	-29442	116507	527474	4.53	
SLV 12	11	0.39	9.1	-29236	116507	524716	4.5	
SLV 13	11	0.39	8.2	-26336	116507	484568	4.16	
SLV 14	11	0.39	8.14	-26151	116507	481912	4.14	
SLV 15	11	0.39	8.7	-27929	116507	506939	4.35	
SLV 16	11	0.39	8.64	-27743	116507	504375	4.33	

Verifica dei meccanismi locali di collasso con analisi cinematica lineare
accelerazione limite = 196,01; forza di aggancio al piano = 30

combinazione	N top	N base	V orto	alfa0	M*	e*	a0*	
SLV 1	-11389	-39027	-83	0.598	24.448	0.892	487	
SLV 2	-11396	-38352	-84	0.597	24.455	0.893	486	
SLV 3	-11583	-39537	-10	0.596	24.634	0.893	485	
SLV 4	-11590	-38862	-11	0.596	24.64	0.893	485	
SLV 5	-11270	-35004	-136	0.598	24.334	0.892	487	
SLV 6	-11278	-34252	-136	0.598	24.342	0.892	487	
SLV 7	-11918	-36705	106	0.582	24.954	0.893	473	
SLV 8	-11926	-35953	105	0.581	24.961	0.893	473	
SLV 9	-11363	-32033	-108	0.597	24.423	0.892	486	
SLV 10	-11370	-31281	-109	0.597	24.43	0.892	486	
SLV 11	-12011	-33734	133	0.578	25.043	0.894	470	
SLV 12	-12019	-32982	132	0.578	25.05	0.894	470	
SLV 13	-11698	-29124	8	0.593	24.743	0.893	482	
SLV 14	-11705	-28449	7	0.593	24.75	0.893	482	
SLV 15	-11892	-29634	80	0.584	24.929	0.893	475	
SLV 16	-11899	-28959	80	0.583	24.936	0.893	475	

Maschio 39
Maschio considerato membratura sismica secondaria
Dati geometrici

X ini.	Y ini.	X fin.	Y fin.	quota i.	quota.s	l	sp.	h netta	h ini.	h fin.	a
220	1530	135	1530	L2	L3	85	70	460	560	560	

Materiale: Muratura in pietrame consolidata con iniezioni LC1
f medio 30
tau 0.9
E 24000
G 8053.69
Fattore di confidenza 1.35

Verifica a pressoflessione per azioni non sismiche 4.5.6.2 D.M. 14-01-08 (N.T.C.) gammaM 3

comb.	quota	N	M	p	es1	es2	ea	ev	e ver (cm)	Ft	Fl	Nu (daN)	
1	1060	-1173	1489	1	0	9.07	2.3	0,00	11,37	0,53	0,95	22138	
1	730	-5947	-34581	1	0	9.07	2.3	0,00	5,68	0,69	0,79	23753	
1	500	-9132	-13821	1	0	9.07	2.3	0,00	11,37	0,53	0,94	21930	
2	1060	-1340	1441	1	0	9.02	2.3	0,00	11,32	0,53	0,96	22360	
2	730	-6147	-35847	1	0	9.02	2.3	0,00	5,66	0,69	0,79	23773	
2	500	-9324	-14562	1	0	9.02	2.3	0,00	11,32	0,53	0,94	21944	
3	1060	-1577	1378	1	0	8.95	2.3	0,00	11,25	0,53	0,97	22605	
3	730	-6433	-38015	1	0	8.95	2.3	0,00	5,63	0,69	0,78	23734	
3	500	-9638	-16473	1	0	8.95	2.3	0,00	11,25	0,53	0,94	21889	
4	1060	-1511	1400	1	0	8.96	2.3	0,00	11,26	0,53	0,97	22551	
4	730	-6355	-37678	1	0	8.96	2.3	0,00	5,63	0,69	0,78	23706	
4	500	-9581	-16550	1	0	8.96	2.3	0,00	11,26	0,53	0,94	21865	
5	1060	-1594	1376	1	0	8.95	2.3	0,00	11,25	0,53	0,97	22624	
5	730	-6455	-38311	1	0	8.95	2.3	0,00	5,62	0,69	0,78	23711	
5	500	-9677	-16920	1	0	8.95	2.3	0,00	11,25	0,53	0,94	21864	
6	1060	-1675	1237	1	0	7.65	2.3	0,00	9,95	0,57	0,97	24259	
6	730	-6548	-38628	1	0	7.65	2.3	0,00	4,97	0,72	0,78	24738	
6	500	-9724	-15188	1	0	7.65	2.3	0,00	9,95	0,57	0,94	23505	
7	1060	-1842	1188	1	0	7.74	2.3	0,00	10,04	0,56	0,98	24234	
7	730	-6748	-39894	1	0	7.74	2.3	0,00	5,02	0,71	0,78	24653	
7	500	-9916	-15929	1	0	7.74	2.3	0,00	10,04	0,56	0,94	23358	
8	1060	-2079	1126	1	0	7.84	2.3	0,00	10,14	0,56	0,98	24213	
8	730	-7034	-42062	1	0	7.84	2.3	0,00	5,07	0,71	0,78	24500	
8	500	-10230	-17840	1	0	7.84	2.3	0,00	10,14	0,56	0,94	23122	
9	1060	-2013	1148	1	0	7.81	2.3	0,00	10,11	0,56	0,98	24223	
9	730	-6955	-41725	1	0	7.81	2.3	0,00	5,05	0,71	0,78	24502	
9	500	-10173	-17916	1	0	7.81	2.3	0,00	10,11	0,56	0,94	23142	
10	1060	-2096	1123	1	0	7.84	2.3	0,00	10,14	0,56	0,98	24214	
10	730	-7056	-42358	1	0	7.84	2.3	0,00	5,07	0,71	0,78	24471	
10	500	-10269	-18287	1	0	7.84	2.3	0,00	10,14	0,56	0,93	23085	
11	1060	-1525	1936	1	0	9.07	2.3	0,00	11,37	0,53	0,95	22138	
11	730	-7730	-44955	1	0	9.07	2.3	0,00	5,68	0,69	0,79	23753	
11	500	-11872	-17967	1	0	9.07	2.3	0,00	11,37	0,53	0,94	21930	
12	1060	-1692	1887	1	0	9.03	2.3	0,00	11,33	0,53	0,96	22314	
12	730	-7931	-46221	1	0	9.03	2.3	0,00	5,66	0,69	0,79	23769	
12	500	-12064	-18709	1	0	9.03	2.3	0,00	11,33	0,53	0,94	21942	
13	1060	-1928	1825	1	0	8.97	2.3	0,00	11,27	0,53	0,97	22519	
13	730	-8217	-48389	1	0	8.97	2.3	0,00	5,64	0,69	0,78	23741	
13	500	-12378	-20619	1	0	8.97	2.3	0,00	11,27	0,53	0,94	21903	
14	1060	-1862	1847	1	0	8.98	2.3	0,00	11,28	0,53	0,96	22473	

muratura

comb.	quota	N	M	p	es1	es2	ea	ev	e ver (cm)	Ft	Fl	Nu (daN)	
14	730	-8138	-48052	1	0	8.98	2.3	0,00	5,64	0,69	0,78	23719	
14	500	-12321	-20696	1	0	8.98	2.3	0,00	11,28	0,53	0,94	21884	
15	1060	-1946	1823	1	0	8.97	2.3	0,00	11,27	0,53	0,97	22535	
15	730	-8239	-48685	1	0	8.97	2.3	0,00	5,63	0,69	0,78	23723	
15	500	-12417	-21067	1	0	8.97	2.3	0,00	11,27	0,53	0,94	21884	
16	1060	-2027	1683	1	0	7.89	2.3	0,00	10,19	0,56	0,97	23886	
16	730	-8331	-49003	1	0	7.89	2.3	0,00	5,10	0,71	0,78	24572	
16	500	-12464	-19334	1	0	7.89	2.3	0,00	10,19	0,56	0,94	23234	
17	1060	-2194	1635	1	0	7.95	2.3	0,00	10,25	0,56	0,97	23893	
17	730	-8532	-50269	1	0	7.95	2.3	0,00	5,13	0,71	0,78	24515	
17	500	-12656	-20076	1	0	7.95	2.3	0,00	10,25	0,56	0,94	23134	
18	1060	-2431	1573	1	0	8.02	2.3	0,00	10,32	0,56	0,98	23907	
18	730	-8818	-52436	1	0	8.02	2.3	0,00	5,16	0,71	0,78	24404	
18	500	-12970	-21986	1	0	8.02	2.3	0,00	10,32	0,56	0,94	22965	
19	1060	-2365	1595	1	0	7.99	2.3	0,00	10,29	0,56	0,98	23908	
19	730	-8739	-52099	1	0	7.99	2.3	0,00	5,15	0,71	0,78	24404	
19	500	-12913	-22063	1	0	7.99	2.3	0,00	10,29	0,56	0,94	22977	
20	1060	-2448	1570	1	0	8.02	2.3	0,00	10,32	0,56	0,98	23910	
20	730	-8840	-52732	1	0	8.02	2.3	0,00	5,16	0,71	0,78	24381	
20	500	-13009	-22434	1	0	8.02	2.3	0,00	10,32	0,56	0,94	22937	

Verifica a taglio con rottura per fessurazione diagonale per azioni non sismiche Circ.617 C8.7.1.5 gammaM 3

comb.	quota	Vd	N	ftd	b	sigma0	Vu	c.s.	
SLU 1	750	-48	-5277	0.33	1.5	0.89	2530	53.21	
SLU 1	600	2	-7455	0.33	1.5	1.25	2884	100	
SLU 2	750	-49	-5472	0.33	1.5	0.92	2563	52.53	
SLU 2	600	2	-7656	0.33	1.5	1.29	2915	100	
SLU 3	750	-51	-5746	0.33	1.5	0.97	2610	51.27	
SLU 3	600	2	-7948	0.33	1.5	1.34	2959	100	
SLU 4	750	-51	-5669	0.33	1.5	0.95	2597	51.37	
SLU 4	600	2	-7871	0.33	1.5	1.32	2947	100	
SLU 5	750	-51	-5766	0.33	1.5	0.97	2614	51.06	
SLU 5	600	2	-7972	0.33	1.5	1.34	2962	100	
SLU 6	750	-51	-5857	0.33	1.5	0.98	2629	51.33	
SLU 6	600	2	-8063	0.33	1.5	1.36	2976	100	
SLU 7	750	-52	-6051	0.33	1.5	1.02	2661	50.71	
SLU 7	600	2	-8264	0.33	1.5	1.39	3006	100	
SLU 8	750	-55	-6326	0.33	1.5	1.06	2706	49.58	
SLU 8	600	3	-8556	0.33	1.5	1.44	3048	100	
SLU 9	750	-54	-6249	0.33	1.5	1.05	2694	49.67	
SLU 9	600	3	-8479	0.33	1.5	1.43	3037	100	
SLU 10	750	-55	-6346	0.33	1.5	1.07	2710	49.39	
SLU 10	600	3	-8580	0.33	1.5	1.44	3051	100	
SLU 11	750	-62	-6861	0.33	1.5	1.15	2792	45.18	
SLU 11	600	3	-9692	0.33	1.5	1.63	3208	100	
SLU 12	750	-63	-7055	0.33	1.5	1.19	2823	44.76	
SLU 12	600	3	-9893	0.33	1.5	1.66	3236	100	
SLU 13	750	-65	-7329	0.33	1.5	1.23	2865	43.96	
SLU 13	600	3	-10184	0.33	1.5	1.71	3275	100	
SLU 14	750	-65	-7252	0.33	1.5	1.22	2853	44.02	
SLU 14	600	3	-10108	0.33	1.5	1.7	3265	100	
SLU 15	750	-65	-7349	0.33	1.5	1.24	2868	43.82	
SLU 15	600	3	-10208	0.33	1.5	1.72	3278	100	
SLU 16	750	-65	-7440	0.33	1.5	1.25	2882	44.01	
SLU 16	600	3	-10299	0.33	1.5	1.73	3290	100	
SLU 17	750	-67	-7635	0.33	1.5	1.28	2912	43.63	
SLU 17	600	3	-10501	0.33	1.5	1.76	3317	100	
SLU 18	750	-69	-7909	0.33	1.5	1.33	2953	42.89	
SLU 18	600	3	-10792	0.33	1.5	1.81	3356	100	
SLU 19	750	-68	-7832	0.33	1.5	1.32	2941	42.94	
SLU 19	600	3	-10716	0.33	1.5	1.8	3346	100	
SLU 20	750	-69	-7929	0.33	1.5	1.33	2956	42.76	
SLU 20	600	3	-10816	0.33	1.5	1.82	3359	100	

Verifica a pressoflessione fuori piano D.M. 14-01-08 (N.T.C.)
quota 730 Ta 0.06 Wa 0.15 denominatore 8

comb.	fd	Sa	x	N	M	Mc	c.s.	
SLV 1	11	0.52	7.91	-6346	59494	197031	3.31	
SLV 2	11	0.52	7.89	-6338	59494	196802	3.31	
SLV 3	11	0.52	7.97	-6397	59494	198402	3.33	
SLV 4	11	0.52	7.96	-6388	59494	198174	3.33	
SLV 5	11	0.52	7.89	-6331	59494	196608	3.3	
SLV 6	11	0.52	7.87	-6321	59494	196354	3.3	
SLV 7	11	0.52	8.1	-6499	59494	201171	3.38	
SLV 8	11	0.52	8.08	-6490	59494	200919	3.38	
SLV 9	11	0.52	7.93	-6367	59494	197608	3.32	
SLV 10	11	0.52	7.92	-6358	59494	197354	3.32	
SLV 11	11	0.52	8.14	-6536	59494	202163	3.4	
SLV 12	11	0.52	8.13	-6527	59494	201911	3.39	
SLV 13	11	0.52	8.06	-6469	59494	200355	3.37	
SLV 14	11	0.52	8.05	-6461	59494	200128	3.36	
SLV 15	11	0.52	8.12	-6520	59494	201719	3.39	
SLV 16	11	0.52	8.11	-6511	59494	201492	3.39	

Verifica dei meccanismi locali di collasso con analisi cinematica lineare
accelerazione limite = 196,01; forza di aggancio al piano = 30

combinazione	N top	N base	V orto	alfa0	M*	e*	a0*	
SLV 1	-1560	-9914	-51	0.673	6.947	0.899	544	
SLV 2	-1566	-9875	-50	0.672	6.952	0.899	544	
SLV 3	-1577	-10196	-12	0.679	6.961	0.899	549	
SLV 4	-1583	-10158	-11	0.679	6.965	0.899	549	
SLV 5	-1542	-9293	-73	0.671	6.933	0.899	542	
SLV 6	-1549	-9250	-72	0.67	6.939	0.899	541	
SLV 7	-1600	-10235	56	0.667	6.978	0.898	539	
SLV 8	-1607	-10192	56	0.666	6.983	0.898	539	
SLV 9	-1544	-9041	-53	0.675	6.935	0.899	545	
SLV 10	-1551	-8999	-53	0.674	6.941	0.899	545	
SLV 11	-1602	-9984	75	0.662	6.98	0.898	536	

combinazione	N top	N base	V orto	alfa0	M*	e*	a0*	
SLV 12	-1609	-9941	76	0.661	6.985	0.898	535	
SLV 13	-1567	-9076	14	0.68	6.953	0.899	550	
SLV 14	-1574	-9037	15	0.679	6.958	0.899	549	
SLV 15	-1585	-9358	53	0.669	6.966	0.899	541	
SLV 16	-1591	-9320	54	0.668	6.971	0.898	541	

Maschio 40
Maschio considerato membratura sismica secondaria
Dati geometrici

X ini.	Y ini.	X fin.	Y fin.	quota i.	quota.s	l	sp.	h netta	h ini.	h fin.	a
680	240	680	135	L2	L3	105	70	460	560	560	

Materiale: Muratura in pietrame consolidata con iniezioni LC1
f medio 30
tau 0.9
E 24000
G 8053.69
Fattore di confidenza 1.35

Verifica a pressoflessione per azioni non sismiche 4.5.6.2 D.M. 14-01-08 (N.T.C.) gammaM 3

comb.	quota	N	M	p	es1	es2	ea	ev	e ver (cm)	Ft	Fl	Nu (daN)	
1	1060	-3146	-11477	1	0	0.8	2.3	0,00	3,10	0,80	0,89	38776	
1	730	-8680	-34202	1	0	0.8	2.3	0,00	2,30	0,83	0,88	40098	
1	500	-13382	-29293	1	0	0.8	2.3	0,00	3,10	0,80	0,93	40661	
2	1060	-3572	-13049	1	0	0.8	2.3	0,00	3,10	0,80	0,89	38768	
2	730	-9195	-40234	1	0	0.8	2.3	0,00	2,30	0,83	0,87	39510	
2	500	-13910	-34603	1	0	0.8	2.3	0,00	3,10	0,80	0,93	40274	
3	1060	-4166	-15204	1	0	0.8	2.3	0,00	3,10	0,80	0,89	38769	
3	730	-9927	-50337	1	0	0.8	2.3	0,00	2,30	0,83	0,85	38572	
3	500	-14632	-45098	1	0	0.8	2.3	0,00	3,10	0,80	0,91	39503	
4	1060	-3995	-14556	1	0	0.81	2.3	0,00	3,11	0,80	0,89	38777	
4	730	-9726	-48635	1	0	0.81	2.3	0,00	2,30	0,83	0,85	38667	
4	500	-14414	-44286	1	0	0.81	2.3	0,00	3,11	0,80	0,91	39515	
5	1060	-4207	-15341	1	0	0.81	2.3	0,00	3,11	0,80	0,89	38773	
5	730	-9983	-51651	1	0	0.81	2.3	0,00	2,30	0,83	0,85	38433	
5	500	-14678	-46941	1	0	0.81	2.3	0,00	3,11	0,80	0,90	39352	
6	1060	-3807	-12861	1	0	0.8	2.3	0,00	3,10	0,80	0,90	39132	
6	730	-9480	-40703	1	0	0.8	2.3	0,00	2,30	0,83	0,87	39621	
6	500	-14178	-35966	1	0	0.8	2.3	0,00	3,10	0,80	0,92	40220	
7	1060	-4233	-14433	1	0	0.8	2.3	0,00	3,10	0,80	0,90	39089	
7	730	-9995	-46735	1	0	0.8	2.3	0,00	2,30	0,83	0,86	39105	
7	500	-14706	-41276	1	0	0.8	2.3	0,00	3,10	0,80	0,92	39869	
8	1060	-4826	-16588	1	0	0.8	2.3	0,00	3,10	0,80	0,90	39051	
8	730	-10727	-56838	1	0	0.8	2.3	0,00	2,30	0,83	0,84	38264	
8	500	-15428	-51771	1	0	0.8	2.3	0,00	3,10	0,80	0,90	39156	
9	1060	-4655	-15940	1	0	0.8	2.3	0,00	3,10	0,80	0,90	39067	
9	730	-10525	-55136	1	0	0.8	2.3	0,00	2,30	0,83	0,84	38346	
9	500	-15210	-50959	1	0	0.8	2.3	0,00	3,10	0,80	0,90	39163	
10	1060	-4868	-16725	1	0	0.8	2.3	0,00	3,10	0,80	0,90	39052	
10	730	-10783	-58152	1	0	0.8	2.3	0,00	2,30	0,83	0,84	38137	
10	500	-15474	-53614	1	0	0.8	2.3	0,00	3,10	0,80	0,90	39014	
11	1060	-4090	-14921	1	0	0.8	2.3	0,00	3,10	0,80	0,89	38776	
11	730	-11285	-44462	1	0	0.8	2.3	0,00	2,30	0,83	0,88	40098	
11	500	-17397	-38081	1	0	0.8	2.3	0,00	3,10	0,80	0,93	40661	
12	1060	-4516	-16492	1	0	0.8	2.3	0,00	3,10	0,80	0,89	38769	
12	730	-11799	-50494	1	0	0.8	2.3	0,00	2,30	0,83	0,87	39640	
12	500	-17925	-43391	1	0	0.8	2.3	0,00	3,10	0,80	0,93	40360	
13	1060	-5110	-18647	1	0	0.8	2.3	0,00	3,10	0,80	0,89	38771	
13	730	-12531	-60597	1	0	0.8	2.3	0,00	2,30	0,83	0,86	38889	
13	500	-18647	-53886	1	0	0.8	2.3	0,00	3,10	0,80	0,91	39752	
14	1060	-4938	-17999	1	0	0.8	2.3	0,00	3,10	0,80	0,89	38777	
14	730	-12330	-58895	1	0	0.8	2.3	0,00	2,30	0,83	0,86	38969	
14	500	-18429	-53074	1	0	0.8	2.3	0,00	3,10	0,80	0,91	39765	
15	1060	-5151	-18785	1	0	0.8	2.3	0,00	3,10	0,80	0,89	38774	
15	730	-12587	-61911	1	0	0.8	2.3	0,00	2,30	0,83	0,85	38777	
15	500	-18693	-55729	1	0	0.8	2.3	0,00	3,10	0,80	0,91	39633	
16	1060	-4751	-16305	1	0	0.8	2.3	0,00	3,10	0,80	0,90	39061	
16	730	-12085	-50964	1	0	0.8	2.3	0,00	2,30	0,83	0,87	39724	
16	500	-18193	-44754	1	0	0.8	2.3	0,00	3,10	0,80	0,93	40317	
17	1060	-5176	-17876	1	0	0.8	2.3	0,00	3,10	0,80	0,90	39032	
17	730	-12599	-56995	1	0	0.8	2.3	0,00	2,30	0,83	0,87	39310	
17	500	-18721	-50064	1	0	0.8	2.3	0,00	3,10	0,80	0,92	40039	
18	1060	-5770	-20031	1	0	0.8	2.3	0,00	3,10	0,80	0,90	39006	
18	730	-13331	-67099	1	0	0.8	2.3	0,00	2,30	0,83	0,85	38623	
18	500	-19443	-60559	1	0	0.8	2.3	0,00	3,10	0,80	0,91	39467	
19	1060	-5599	-19383	1	0	0.8	2.3	0,00	3,10	0,80	0,90	39018	
19	730	-13130	-65397	1	0	0.8	2.3	0,00	2,30	0,83	0,85	38693	
19	500	-19225	-59747	1	0	0.8	2.3	0,00	3,10	0,80	0,91	39476	
20	1060	-5812	-20169	1	0	0.8	2.3	0,00	3,10	0,80	0,90	39007	
20	730	-13387	-68413	1	0	0.8	2.3	0,00	2,30	0,83	0,85	38519	
20	500	-19489	-62402	1	0	0.8	2.3	0,00	3,10	0,80	0,90	39354	

Verifica a taglio con rottura per fessurazione diagonale per azioni non sismiche Circ.617 C8.7.1.5 gammaM 3

comb.	quota	Vd	N	ftd	b	sigma0	Vu	c.s.	
SLU 1	750	-334	-8060	0.33	1.5	1.1	3383	10.13	
SLU 1	500	21	-13382	0.33	1.5	1.82	4152	100	
SLU 2	750	-338	-8575	0.33	1.5	1.17	3465	10.26	
SLU 2	500	21	-13910	0.33	1.5	1.89	4221	100	
SLU 3	750	-341	-9310	0.33	1.5	1.27	3578	10.5	
SLU 3	500	21	-14632	0.33	1.5	1.99	4313	100	
SLU 4	750	-338	-9110	0.33	1.5	1.24	3548	10.49	
SLU 4	500	21	-14414	0.33	1.5	1.96	4285	100	
SLU 5	750	-340	-9367	0.33	1.5	1.27	3587	10.54	
SLU 5	500	21	-14678	0.33	1.5	2	4319	100	

muratura

comb.	quota	Vd	N	ftd	b	sigma0	Vu	c.s.	
SLU 6	750	-351	-8858	0.33	1.5	1.21	3509	10	
SLU 6	500	22	-14178	0.33	1.5	1.93	4255	100	
SLU 7	750	-355	-9373	0.33	1.5	1.28	3588	10.12	
SLU 7	500	22	-14706	0.33	1.5	2	4322	100	
SLU 8	750	-358	-10108	0.33	1.5	1.38	3698	10.34	
SLU 8	500	22	-15428	0.33	1.5	2.1	4412	100	
SLU 9	750	-355	-9907	0.33	1.5	1.35	3668	10.32	
SLU 9	500	22	-15210	0.33	1.5	2.07	4385	100	
SLU 10	750	-357	-10165	0.33	1.5	1.38	3706	10.38	
SLU 10	500	22	-15474	0.33	1.5	2.11	4418	100	
SLU 11	750	-434	-10478	0.33	1.5	1.43	3752	8.64	
SLU 11	500	27	-17397	0.33	1.5	2.37	4649	100	
SLU 12	750	-438	-10993	0.33	1.5	1.5	3826	8.74	
SLU 12	500	27	-17925	0.33	1.5	2.44	4710	100	
SLU 13	750	-441	-11728	0.33	1.5	1.6	3929	8.91	
SLU 13	500	27	-18647	0.33	1.5	2.54	4793	100	
SLU 14	750	-439	-11528	0.33	1.5	1.57	3901	8.9	
SLU 14	500	27	-18429	0.33	1.5	2.51	4768	100	
SLU 15	750	-440	-11785	0.33	1.5	1.6	3937	8.94	
SLU 15	500	27	-18693	0.33	1.5	2.54	4798	100	
SLU 16	750	-451	-11276	0.33	1.5	1.53	3866	8.57	
SLU 16	500	28	-18193	0.33	1.5	2.48	4741	100	
SLU 17	750	-455	-11791	0.33	1.5	1.6	3938	8.66	
SLU 17	500	28	-18721	0.33	1.5	2.55	4801	100	
SLU 18	750	-458	-12526	0.33	1.5	1.7	4038	8.82	
SLU 18	500	28	-19443	0.33	1.5	2.65	4883	100	
SLU 19	750	-456	-12325	0.33	1.5	1.68	4011	8.81	
SLU 19	500	28	-19225	0.33	1.5	2.62	4858	100	
SLU 20	750	-457	-12583	0.33	1.5	1.71	4046	8.85	
SLU 20	500	28	-19489	0.33	1.5	2.65	4888	100	

Verifica a pressoflessione fuori piano D.M. 14-01-08 (N.T.C.)
quota 730 Ta 0.06 Wa 0.15 denominatore 8

comb.	fd	Sa	x	N	M	Mc	c.s.	
SLV 1	11	0.52	10.58	-10495	73493	311801	4.24	
SLV 2	11	0.52	10.44	-10350	73493	308248	4.19	
SLV 3	11	0.52	9.76	-9676	73493	291453	3.97	
SLV 4	11	0.52	9.61	-9531	73493	287780	3.92	
SLV 5	11	0.52	11.14	-11047	73493	325103	4.42	
SLV 6	11	0.52	10.98	-10885	73493	321234	4.37	
SLV 7	11	0.52	8.38	-8315	73493	256160	3.49	
SLV 8	11	0.52	8.22	-8153	73493	251846	3.43	
SLV 9	11	0.52	10.78	-10692	73493	316587	4.31	
SLV 10	11	0.52	10.62	-10531	73493	312660	4.25	
SLV 11	11	0.52	8.03	-7961	73493	246668	3.36	
SLV 12	11	0.52	7.86	-7799	73493	242296	3.3	
SLV 13	11	0.52	9.39	-9315	73493	282266	3.84	
SLV 14	11	0.52	9.25	-9170	73493	278540	3.79	
SLV 15	11	0.52	8.57	-8495	73493	260942	3.55	
SLV 16	11	0.52	8.42	-8350	73493	257096	3.5	

Verifica dei meccanismi locali di collasso con analisi cinematica lineare
accelerazione limite = 196,01; forza di aggancio al piano = 30

combinazione	N top	N base	V orto	alfa0	M*	e*	a0*	
SLV 1	-3756	-15190	58	0.528	10.143	0.889	431	
SLV 2	-3779	-15040	55	0.527	10.164	0.889	430	
SLV 3	-3829	-14400	68	0.522	10.21	0.889	427	
SLV 4	-3853	-14250	66	0.521	10.231	0.889	426	
SLV 5	-3635	-15700	3	0.542	10.034	0.889	443	
SLV 6	-3661	-15533	0	0.541	10.057	0.889	442	
SLV 7	-3880	-13066	37	0.523	10.256	0.889	427	
SLV 8	-3906	-12899	34	0.522	10.28	0.889	427	
SLV 9	-3606	-15340	-34	0.54	10.008	0.889	441	
SLV 10	-3632	-15173	-37	0.538	10.031	0.889	440	
SLV 11	-3851	-12705	0	0.53	10.23	0.889	433	
SLV 12	-3877	-12538	-3	0.528	10.254	0.889	431	
SLV 13	-3660	-13989	-65	0.532	10.056	0.889	435	
SLV 14	-3683	-13839	-68	0.531	10.077	0.889	434	
SLV 15	-3733	-13198	-55	0.529	10.122	0.889	433	
SLV 16	-3757	-13048	-58	0.528	10.144	0.889	431	

Maschio 41
Dati geometrici

X ini.	Y ini.	X fin.	Y fin.	quota i.	quota.s	l	sp.	h netta	h ini.	h fin.	a
680	880	680	360	L2	L3	520	70	460	560	560	

Materiale: Muratura in pietrame consolidata con iniezioni LC1
f medio 30
tau 0.9
E 24000
G 8053.69
Fattore di confidenza 1.35

Verifica a pressoflessione per azioni non sismiche 4.5.6.2 D.M. 14-01-08 (N.T.C.) gammaM 3

comb.	quota	N	M	p	es1	es2	ea	ev	e ver (cm)	Ft	Fl	Nu (daN)	
1	1060	-17538	109576	1	0	0.71	2.3	0,00	3,01	0,80	0,96	208328	
1	730	-54975	-327699	1	0	0.71	2.3	0,00	2,30	0,83	0,96	216868	
1	500	-78620	-719945	1	0	0.71	2.3	0,00	3,01	0,80	0,95	204550	
2	1060	-19898	115354	1	0	0.71	2.3	0,00	3,01	0,80	0,97	208900	
2	730	-58373	-329631	1	0	0.71	2.3	0,00	2,30	0,83	0,97	217292	
2	500	-82235	-670001	1	0	0.71	2.3	0,00	3,01	0,80	0,95	205849	

comb.	quota	N	M	p	es1	es2	ea	ev	e ver (cm)	Ft	Fl	Nu (daN)	
3	1060	-23173	125039	1	0	0.72	2.3	0,00	3,02	0,80	0,97	209397	
3	730	-62567	-283254	1	0	0.72	2.3	0,00	2,30	0,83	0,97	218803	
3	500	-85968	-574417	1	0	0.72	2.3	0,00	3,02	0,80	0,96	207728	
4	1060	-22217	123411	1	0	0.72	2.3	0,00	3,02	0,80	0,97	209190	
4	730	-60967	-261446	1	0	0.72	2.3	0,00	2,30	0,83	0,97	219125	
4	500	-83953	-583396	1	0	0.72	2.3	0,00	3,02	0,80	0,96	207379	
5	1060	-23396	126300	1	0	0.72	2.3	0,00	3,02	0,80	0,97	209389	
5	730	-62666	-262412	1	0	0.72	2.3	0,00	2,30	0,83	0,97	219262	
5	500	-85761	-558424	1	0	0.72	2.3	0,00	3,02	0,80	0,96	207944	
6	1060	-21054	122634	1	0	0.72	2.3	0,00	3,02	0,80	0,97	208850	
6	730	-59581	-290375	1	0	0.72	2.3	0,00	2,30	0,83	0,97	218336	
6	500	-82961	-687376	1	0	0.72	2.3	0,00	3,02	0,80	0,95	205655	
7	1060	-23414	128412	1	0	0.72	2.3	0,00	3,02	0,80	0,97	209284	
7	730	-62980	-292307	1	0	0.72	2.3	0,00	2,30	0,83	0,97	218649	
7	500	-86576	-637432	1	0	0.72	2.3	0,00	3,02	0,80	0,96	206845	
8	1060	-26689	138097	1	0	0.72	2.3	0,00	3,02	0,80	0,97	209668	
8	730	-67174	-245930	1	0	0.72	2.3	0,00	2,30	0,83	0,98	219972	
8	500	-90309	-541847	1	0	0.72	2.3	0,00	3,02	0,80	0,96	208596	
9	1060	-25733	136470	1	0	0.72	2.3	0,00	3,02	0,80	0,97	209499	
9	730	-65573	-224122	1	0	0.72	2.3	0,00	2,30	0,83	0,98	220300	
9	500	-88294	-550827	1	0	0.72	2.3	0,00	3,02	0,80	0,96	208285	
10	1060	-26912	139359	1	0	0.72	2.3	0,00	3,02	0,80	0,97	209659	
10	730	-67272	-225088	1	0	0.72	2.3	0,00	2,30	0,83	0,98	220397	
10	500	-90101	-525855	1	0	0.72	2.3	0,00	3,02	0,80	0,96	208805	
11	1060	-22799	142448	1	0	0.71	2.3	0,00	3,01	0,80	0,96	208328	
11	730	-71468	-426009	1	0	0.71	2.3	0,00	2,30	0,83	0,96	216868	
11	500	-102206	-935929	1	0	0.71	2.3	0,00	3,01	0,80	0,95	204550	
12	1060	-25159	148226	1	0	0.71	2.3	0,00	3,01	0,80	0,96	208781	
12	730	-74866	-427941	1	0	0.71	2.3	0,00	2,30	0,83	0,97	217199	
12	500	-105821	-885985	1	0	0.71	2.3	0,00	3,01	0,80	0,95	205559	
13	1060	-28434	157911	1	0	0.72	2.3	0,00	3,02	0,80	0,97	209200	
13	730	-79060	-381564	1	0	0.72	2.3	0,00	2,30	0,83	0,97	218400	
13	500	-109554	-790400	1	0	0.72	2.3	0,00	3,02	0,80	0,96	207043	
14	1060	-27478	156284	1	0	0.72	2.3	0,00	3,02	0,80	0,97	209025	
14	730	-77459	-359756	1	0	0.72	2.3	0,00	2,30	0,83	0,97	218645	
14	500	-107539	-799380	1	0	0.72	2.3	0,00	3,02	0,80	0,96	206758	
15	1060	-28658	159173	1	0	0.72	2.3	0,00	3,02	0,80	0,97	209195	
15	730	-79158	-360722	1	0	0.72	2.3	0,00	2,30	0,83	0,97	218763	
15	500	-109347	-774408	1	0	0.72	2.3	0,00	3,02	0,80	0,96	207211	
16	1060	-26315	155506	1	0	0.72	2.3	0,00	3,02	0,80	0,96	208746	
16	730	-76074	-388685	1	0	0.72	2.3	0,00	2,30	0,83	0,97	218018	
16	500	-106547	-903359	1	0	0.72	2.3	0,00	3,02	0,80	0,95	205410	
17	1060	-28675	161285	1	0	0.72	2.3	0,00	3,02	0,80	0,97	209108	
17	730	-79472	-390617	1	0	0.72	2.3	0,00	2,30	0,83	0,97	218280	
17	500	-110162	-853415	1	0	0.72	2.3	0,00	3,02	0,80	0,95	206352	
18	1060	-31950	170970	1	0	0.72	2.3	0,00	3,02	0,80	0,97	209448	
18	730	-83666	-344240	1	0	0.72	2.3	0,00	2,30	0,83	0,98	219360	
18	500	-113895	-757831	1	0	0.72	2.3	0,00	3,02	0,80	0,96	207756	
19	1060	-30994	169342	1	0	0.72	2.3	0,00	3,02	0,80	0,97	209300	
19	730	-82066	-322432	1	0	0.72	2.3	0,00	2,30	0,83	0,98	219610	
19	500	-111880	-766810	1	0	0.72	2.3	0,00	3,02	0,80	0,96	207495	
20	1060	-32174	172231	1	0	0.72	2.3	0,00	3,02	0,80	0,97	209441	
20	730	-83765	-323398	1	0	0.72	2.3	0,00	2,30	0,83	0,98	219702	
20	500	-113687	-741838	1	0	0.72	2.3	0,00	3,02	0,80	0,96	207920	

Verifica a taglio con rottura per fessurazione diagonale per azioni non sismiche Circ.617 C8.7.1.5 gammaM 3

comb.	quota	Vd	N	ftd	b	sigma0	Vu	c.s.	
SLU 1	750	-1525	-52328	0.33	1	1.44	27967	18.34	
SLU 1	500	-1530	-78620	0.33	1	2.16	33183	21.69	
SLU 2	750	-1347	-55697	0.33	1	1.53	28688	21.3	
SLU 2	500	-1353	-82235	0.33	1	2.26	33838	25.01	
SLU 3	750	-1155	-59907	0.33	1	1.65	29565	25.6	
SLU 3	500	-1161	-85968	0.33	1	2.36	34501	29.72	
SLU 4	750	-1250	-58343	0.33	1	1.6	29242	23.39	
SLU 4	500	-1256	-83953	0.33	1	2.31	34145	27.19	
SLU 5	750	-1161	-60027	0.33	1	1.65	29590	25.48	
SLU 5	500	-1167	-85761	0.33	1	2.36	34464	29.53	
SLU 6	750	-1532	-56924	0.33	1	1.56	28947	18.89	
SLU 6	500	-1538	-82961	0.33	1	2.28	33968	22.09	
SLU 7	750	-1355	-60293	0.33	1	1.66	29644	21.88	
SLU 7	500	-1360	-86576	0.33	1	2.38	34607	25.44	
SLU 8	750	-1162	-64503	0.33	1	1.77	30494	26.23	
SLU 8	500	-1168	-90309	0.33	1	2.48	35256	30.18	
SLU 9	750	-1258	-62939	0.33	1	1.73	30181	24	
SLU 9	500	-1263	-88294	0.33	1	2.43	34907	27.63	
SLU 10	750	-1169	-64623	0.33	1	1.78	30517	26.11	
SLU 10	500	-1175	-90101	0.33	1	2.48	35220	29.98	
SLU 11	750	-1982	-68027	0.33	1	1.87	31187	15.73	
SLU 11	500	-1989	-102206	0.33	1	2.81	37247	18.73	
SLU 12	750	-1805	-71395	0.33	1	1.96	31835	17.64	
SLU 12	500	-1812	-105821	0.33	1	2.91	37831	20.88	
SLU 13	750	-1612	-75605	0.33	1	2.08	32628	20.23	
SLU 13	500	-1620	-109554	0.33	1	3.01	38425	23.72	
SLU 14	750	-1708	-74041	0.33	1	2.03	32335	18.94	
SLU 14	500	-1715	-107539	0.33	1	2.95	38105	22.22	
SLU 15	750	-1619	-75725	0.33	1	2.08	32650	20.17	
SLU 15	500	-1626	-109347	0.33	1	3	38392	23.61	
SLU 16	750	-1990	-72623	0.33	1	2	32068	16.12	
SLU 16	500	-1997	-106547	0.33	1	2.93	37947	19.01	
SLU 17	750	-1812	-75992	0.33	1	2.09	32699	18.05	
SLU 17	500	-1819	-110162	0.33	1	3.03	38521	21.17	
SLU 18	750	-1620	-80202	0.33	1	2.2	33471	20.66	
SLU 18	500	-1627	-113895	0.33	1	3.13	39104	24.03	
SLU 19	750	-1715	-78637	0.33	1	2.16	33187	19.35	
SLU 19	500	-1722	-111880	0.33	1	3.07	38790	22.52	
SLU 20	750	-1626	-80322	0.33	1	2.21	33493	20.59	
SLU 20	500	-1634	-113687	0.33	1	3.12	39072	23.92	

Verifica a pressoflessione nel piano (7.8.2.2) e taglio con rottura per fessurazione diagonale (C8.7.1.5), gammaM = 2

comb.	quota	N	V par	V orto	M	M orto	N/(l*sp)	N/(l'*sp)	Mu	l'	fvd	Vt scorr.	Vt fess.diag.	
SLV 1	500	-93173	9337	-3109	1924661	215309	2.56	2.56	17659305	520	0.85	30768	45022	

muratura

comb.	quota	N	V par	V orto	M	M orto	N/(l*sp)	N/(l'*sp)	Mu	l'	fvd	Vt scorr.	Vt fess.diag.	
SLV 1	1060	-21172	1004	836	-22275	-688	0.58	0.58	5165806	520	0.45	16368	26769	
SLV 2	500	-91863	6938	-3117	1247147	215582	2.52	2.52	17502115	520	0.84	30506	44757	
SLV 2	1060	-21100	-826	834	10974	-724	0.58	0.58	5149255	520	0.45	16353	26744	
SLV 3	500	-86615	-7195	-3110	-2128803	218119	2.38	2.38	16846049	520	0.81	29456	43677	
SLV 3	1060	-20771	-6211	810	132473	-709	0.57	0.57	5074075	520	0.45	16287	26632	
SLV 4	500	-85306	-9594	-3117	-2806317	218391	2.34	2.34	16675872	520	0.8	29195	43403	
SLV 4	1060	-20698	-8041	808	165721	-745	0.57	0.57	5057480	520	0.45	16273	26607	
SLV 5	500	-96236	27814	-915	6531131	59402	2.64	2.64	18016932	520	0.86	31380	45637	
SLV 5	1060	-21563	7777	291	-170175	-244	0.59	0.59	5254746	520	0.45	16446	26901	
SLV 6	500	-94778	25143	-923	5776628	59706	2.6	2.6	17848471	520	0.85	31089	45345	
SLV 6	1060	-21482	5740	288	-133148	-285	0.59	0.59	5236362	520	0.45	16430	26874	
SLV 7	500	-74379	-27292	-918	-6980416	68767	2.04	2.13	15154431	498.45	0.76	26506	41048	
SLV 7	1060	-20224	-16273	204	345650	-315	0.56	0.56	4948818	520	0.44	16178	26444	
SLV 8	500	-72920	-29964	-925	-7734919	69071	2	2.26	14937764	461.78	0.78	25359	40723	
SLV 8	1060	-20143	-18311	202	382676	-355	0.55	0.55	4930269	520	0.44	16162	26417	
SLV 9	500	-92240	27003	965	6393075	-71409	2.53	2.53	17547661	520	0.84	30581	44833	
SLV 9	1060	-21493	6279	-203	-140580	113	0.59	0.59	5238702	520	0.45	16432	26878	
SLV 10	500	-90782	24332	957	5638571	-71106	2.49	2.49	17370388	520	0.83	30290	44536	
SLV 10	1060	-21412	4241	-205	-103553	72	0.59	0.59	5220309	520	0.45	16416	26850	
SLV 11	500	-70383	-28103	963	-7118472	-62045	1.93	2.11	14553070	476.58	0.76	25197	40152	
SLV 11	1060	-20153	-17772	-290	375245	43	0.55	0.55	4932631	520	0.44	16164	26420	
SLV 12	500	-68925	-30775	955	-7872976	-61741	1.89	2.25	14327591	437.32	0.78	23989	39821	
SLV 12	1060	-20072	-19810	-292	412271	2	0.55	0.55	4914074	520	0.44	16148	26392	
SLV 13	500	-79855	6633	3157	1464472	-220730	2.19	2.19	15939464	520	0.77	28104	42244	
SLV 13	1060	-20937	-3991	-809	76375	503	0.58	0.58	5112159	520	0.45	16321	26689	
SLV 14	500	-78545	4235	3150	786958	-220457	2.16	2.16	15755899	520	0.76	27842	41962	
SLV 14	1060	-20865	-5821	-811	109624	467	0.57	0.57	5095582	520	0.45	16306	26664	
SLV 15	500	-73298	-9899	3156	-2588992	-217920	2.01	2.01	14994117	520	0.74	26793	40808	
SLV 15	1060	-20535	-11206	-835	231123	482	0.56	0.56	5020285	520	0.45	16240	26552	
SLV 16	500	-71988	-12297	3149	-3266506	-217648	1.98	1.98	14797566	520	0.73	26531	40515	
SLV 16	1060	-20463	-13036	-837	264371	446	0.56	0.56	5003664	520	0.45	16226	26527	

Verifica a pressoflessione fuori piano D.M. 14-01-08 (N.T.C.)
quota 730 Ta 0 Wa 0.15 denominatore 8

comb.	fd	Sa	x	N	M	Mc	c.s.	
SLV 1	11	0.39	13.55	-66556	277181	1878471	6.78	
SLV 2	11	0.39	13.26	-65145	277181	1848007	6.67	
SLV 3	11	0.39	12.01	-58972	277181	1709953	6.17	
SLV 4	11	0.39	11.72	-57561	277181	1677311	6.05	
SLV 5	11	0.39	14.97	-73514	277181	2022783	7.3	
SLV 6	11	0.39	14.65	-71943	277181	1991058	7.18	
SLV 7	11	0.39	9.82	-48234	277181	1451330	5.24	
SLV 8	11	0.39	9.5	-46663	277181	1411517	5.09	
SLV 9	11	0.39	14.63	-71826	277181	1988671	7.17	
SLV 10	11	0.39	14.31	-70255	277181	1956406	7.06	
SLV 11	11	0.39	9.48	-46546	277181	1408526	5.08	
SLV 12	11	0.39	9.16	-44974	277181	1368173	4.94	
SLV 13	11	0.39	12.41	-60928	277181	1754532	6.33	
SLV 14	11	0.39	12.12	-59517	277181	1722451	6.21	
SLV 15	11	0.39	10.86	-53344	277181	1577323	5.69	
SLV 16	11	0.39	10.57	-51933	277181	1543063	5.57	

Verifica dei meccanismi locali di collasso con analisi cinematica lineare
accelerazione limite = 196,01; forza di aggancio al piano = 30

combinazione	N top	N base	V orto	alfa0	M*	e*	a0*	
SLV 1	-21172	-93173	836	0.484	52.591	0.889	396	
SLV 2	-21100	-91863	834	0.485	52.524	0.889	396	
SLV 3	-20771	-86615	810	0.489	52.219	0.889	400	
SLV 4	-20698	-85306	808	0.49	52.152	0.889	400	
SLV 5	-21563	-96236	291	0.494	52.953	0.89	404	
SLV 6	-21482	-94778	288	0.495	52.878	0.889	404	
SLV 7	-20224	-74379	204	0.511	51.715	0.889	417	
SLV 8	-20143	-72920	202	0.512	51.641	0.889	418	
SLV 9	-21493	-92240	-203	0.497	52.887	0.889	406	
SLV 10	-21412	-90782	-205	0.498	52.812	0.889	407	
SLV 11	-20153	-70383	-290	0.509	51.65	0.889	416	
SLV 12	-20072	-68925	-292	0.51	51.576	0.889	417	
SLV 13	-20937	-79855	-809	0.488	52.373	0.889	398	
SLV 14	-20865	-78545	-811	0.488	52.306	0.889	399	
SLV 15	-20535	-73298	-835	0.491	52.002	0.889	401	
SLV 16	-20463	-71988	-837	0.492	51.935	0.889	402	

Maschio 42
Dati geometrici

X ini.	Y ini.	X fin.	Y fin.	quota i.	quota.s	l	sp.	h netta	h ini.	h fin.	a
680	1328.4	680	1030	L2	L3	298.4	70	460	560	560	

Materiale: Muratura in pietrame consolidata con iniezioni LC1
f medio 30
tau 0.9
E 24000
G 8053.69
Fattore di confidenza 1.35

Verifica a pressoflessione per azioni non sismiche 4.5.6.2 D.M. 14-01-08 (N.T.C.) gammaM 3

comb.	quota	N	M	p	es1	es2	ea	ev	e ver (cm)	Ft	Fl	Nu (daN)	
1	1060	-11396	-271840	1	0	0.63	2.3	0,00	2,93	0,81	0,75	93666	
1	730	-34168	284102	1	0	0.63	2.3	0,00	2,30	0,83	0,91	117860	
1	500	-49170	276017	1	0	0.63	2.3	0,00	2,93	0,81	0,94	117463	
2	1060	-12816	-288580	1	0	0.64	2.3	0,00	2,94	0,81	0,76	95378	

comb.	quota	N	M	p	es1	es2	ea	ev	e ver (cm)	Ft	Fl	Nu (daN)	
2	730	-36138	289571	1	0	0.64	2.3	0,00	2,30	0,83	0,92	118267	
2	500	-51315	276742	1	0	0.64	2.3	0,00	2,94	0,81	0,94	117709	
3	1060	-14806	-311741	1	0	0.64	2.3	0,00	2,94	0,81	0,78	97246	
3	730	-38792	305815	1	0	0.64	2.3	0,00	2,30	0,83	0,92	118442	
3	500	-53853	233307	1	0	0.64	2.3	0,00	2,94	0,81	0,95	119047	
4	1060	-14238	-304928	1	0	0.64	2.3	0,00	2,94	0,81	0,78	96785	
4	730	-37960	307308	1	0	0.64	2.3	0,00	2,30	0,83	0,92	118156	
4	500	-52796	213967	1	0	0.64	2.3	0,00	2,94	0,81	0,96	119423	
5	1060	-14948	-313297	1	0	0.64	2.3	0,00	2,94	0,81	0,78	97370	
5	730	-38945	310043	1	0	0.64	2.3	0,00	2,30	0,83	0,92	118337	
5	500	-53869	214329	1	0	0.64	2.3	0,00	2,94	0,81	0,96	119505	
6	1060	-13534	-295658	1	0	0.64	2.3	0,00	2,94	0,81	0,77	96241	
6	730	-37125	309351	1	0	0.64	2.3	0,00	2,30	0,83	0,91	117836	
6	500	-52039	233698	1	0	0.64	2.3	0,00	2,94	0,81	0,95	118870	
7	1060	-14955	-312397	1	0	0.64	2.3	0,00	2,94	0,81	0,78	97462	
7	730	-39095	314820	1	0	0.64	2.3	0,00	2,30	0,83	0,92	118214	
7	500	-54184	234423	1	0	0.64	2.3	0,00	2,94	0,81	0,95	119053	
8	1060	-16945	-335558	1	0	0.65	2.3	0,00	2,95	0,81	0,79	98849	
8	730	-41749	331065	1	0	0.65	2.3	0,00	2,30	0,83	0,92	118379	
8	500	-56723	190988	1	0	0.65	2.3	0,00	2,95	0,81	0,96	120269	
9	1060	-16377	-328745	1	0	0.65	2.3	0,00	2,95	0,81	0,79	98503	
9	730	-40917	332557	1	0	0.65	2.3	0,00	2,30	0,83	0,92	118113	
9	500	-55666	171648	1	0	0.65	2.3	0,00	2,95	0,81	0,97	120648	
10	1060	-17087	-337115	1	0	0.65	2.3	0,00	2,95	0,81	0,79	98943	
10	730	-41902	335292	1	0	0.65	2.3	0,00	2,30	0,83	0,92	118282	
10	500	-56738	172011	1	0	0.65	2.3	0,00	2,95	0,81	0,97	120704	
11	1060	-14814	-353392	1	0	0.63	2.3	0,00	2,93	0,81	0,75	93666	
11	730	-44418	369332	1	0	0.63	2.3	0,00	2,30	0,83	0,91	117860	
11	500	-63920	358822	1	0	0.63	2.3	0,00	2,93	0,81	0,94	117463	
12	1060	-16235	-370132	1	0	0.64	2.3	0,00	2,94	0,81	0,76	95017	
12	730	-46388	374801	1	0	0.64	2.3	0,00	2,30	0,83	0,92	118177	
12	500	-66066	359547	1	0	0.64	2.3	0,00	2,94	0,81	0,94	117654	
13	1060	-18225	-393293	1	0	0.64	2.3	0,00	2,94	0,81	0,77	96575	
13	730	-49043	391046	1	0	0.64	2.3	0,00	2,30	0,83	0,92	118320	
13	500	-68604	316112	1	0	0.64	2.3	0,00	2,94	0,81	0,95	118704	
14	1060	-17657	-386480	1	0	0.64	2.3	0,00	2,94	0,81	0,77	96181	
14	730	-48211	392539	1	0	0.64	2.3	0,00	2,30	0,83	0,91	118093	
14	500	-67547	296772	1	0	0.64	2.3	0,00	2,94	0,81	0,95	118993	
15	1060	-18367	-394849	1	0	0.64	2.3	0,00	2,94	0,81	0,78	96681	
15	730	-49196	395273	1	0	0.64	2.3	0,00	2,30	0,83	0,92	118238	
15	500	-68620	297134	1	0	0.64	2.3	0,00	2,94	0,81	0,95	119064	
16	1060	-16953	-377210	1	0	0.64	2.3	0,00	2,94	0,81	0,77	95722	
16	730	-47375	394582	1	0	0.64	2.3	0,00	2,30	0,83	0,91	117841	
16	500	-66790	316503	1	0	0.64	2.3	0,00	2,94	0,81	0,95	118558	
17	1060	-18374	-393949	1	0	0.64	2.3	0,00	2,94	0,81	0,78	96756	
17	730	-49345	400051	1	0	0.64	2.3	0,00	2,30	0,83	0,92	118140	
17	500	-68935	317228	1	0	0.64	2.3	0,00	2,94	0,81	0,95	118711	
18	1060	-20363	-417110	1	0	0.65	2.3	0,00	2,95	0,81	0,79	97979	
18	730	-52000	416295	1	0	0.65	2.3	0,00	2,30	0,83	0,92	118277	
18	500	-71474	273793	1	0	0.65	2.3	0,00	2,95	0,81	0,96	119686	
19	1060	-19795	-410297	1	0	0.64	2.3	0,00	2,94	0,81	0,78	97669	
19	730	-51168	417788	1	0	0.64	2.3	0,00	2,30	0,83	0,91	118062	
19	500	-70417	254453	1	0	0.64	2.3	0,00	2,94	0,81	0,96	119977	
20	1060	-20506	-418667	1	0	0.65	2.3	0,00	2,95	0,81	0,79	98064	
20	730	-52153	420523	1	0	0.65	2.3	0,00	2,30	0,83	0,92	118199	
20	500	-71489	254816	1	0	0.65	2.3	0,00	2,95	0,81	0,96	120031	

Verifica a taglio con rottura per fessurazione diagonale per azioni non sismiche Circ.617 C8.7.1.5 gammaM 3

comb.	quota	Vd	N	ftd	b	sigma0	Vu	c.s.	
SLU 1	750	-827	-32756	0.33	1.5	1.57	11087	13.4	
SLU 1	500	-842	-49170	0.33	1.5	2.35	13180	15.65	
SLU 2	750	-912	-34726	0.33	1.5	1.66	11359	12.45	
SLU 2	500	-928	-51315	0.33	1.5	2.46	13430	14.47	
SLU 3	750	-1080	-37381	0.33	1.5	1.79	11715	10.85	
SLU 3	500	-1096	-53853	0.33	1.5	2.58	13719	12.51	
SLU 4	750	-1067	-36548	0.33	1.5	1.75	11605	10.88	
SLU 4	500	-1083	-52796	0.33	1.5	2.53	13600	12.56	
SLU 5	750	-1109	-37533	0.33	1.5	1.8	11735	10.58	
SLU 5	500	-1126	-53869	0.33	1.5	2.58	13721	12.19	
SLU 6	750	-1034	-35713	0.33	1.5	1.71	11493	11.12	
SLU 6	500	-1050	-52039	0.33	1.5	2.49	13513	12.87	
SLU 7	750	-1119	-37683	0.33	1.5	1.8	11755	10.51	
SLU 7	500	-1136	-54184	0.33	1.5	2.59	13757	12.11	
SLU 8	750	-1286	-40338	0.33	1.5	1.93	12099	9.41	
SLU 8	500	-1304	-56723	0.33	1.5	2.72	14039	10.76	
SLU 9	750	-1273	-39506	0.33	1.5	1.89	11992	9.42	
SLU 9	500	-1291	-55666	0.33	1.5	2.66	13922	10.79	
SLU 10	750	-1316	-40491	0.33	1.5	1.94	12119	9.21	
SLU 10	500	-1334	-56738	0.33	1.5	2.72	14041	10.53	
SLU 11	750	-1075	-42583	0.33	1.5	2.04	12383	11.52	
SLU 11	500	-1095	-63920	0.33	1.5	3.06	14811	13.53	
SLU 12	750	-1160	-44553	0.33	1.5	2.13	12627	10.88	
SLU 12	500	-1180	-66066	0.33	1.5	3.16	15034	12.74	
SLU 13	750	-1328	-47207	0.33	1.5	2.26	12948	9.75	
SLU 13	500	-1349	-68604	0.33	1.5	3.28	15293	11.34	
SLU 14	750	-1315	-46375	0.33	1.5	2.22	12848	9.77	
SLU 14	500	-1336	-67547	0.33	1.5	3.23	15186	11.37	
SLU 15	750	-1357	-47360	0.33	1.5	2.27	12966	9.55	
SLU 15	500	-1378	-68620	0.33	1.5	3.28	15294	11.1	
SLU 16	750	-1282	-45540	0.33	1.5	2.18	12747	9.94	
SLU 16	500	-1303	-66790	0.33	1.5	3.2	15108	11.6	
SLU 17	750	-1367	-47510	0.33	1.5	2.27	12984	9.5	
SLU 17	500	-1388	-68935	0.33	1.5	3.3	15326	11.04	
SLU 18	750	-1535	-50165	0.33	1.5	2.4	13297	8.66	
SLU 18	500	-1557	-71474	0.33	1.5	3.42	15581	10.01	
SLU 19	750	-1521	-49332	0.33	1.5	2.36	13200	8.68	
SLU 19	500	-1543	-70417	0.33	1.5	3.37	15475	10.03	
SLU 20	750	-1564	-50317	0.33	1.5	2.41	13315	8.51	
SLU 20	500	-1586	-71489	0.33	1.5	3.42	15582	9.82	

Verifica a pressoflessione nel piano (7.8.2.2) e taglio con rottura per fessurazione diagonale (C8.7.1.5), gammaM = 2

muratura

comb.	quota	N	V par	V orto	M	M orto	N/(l*sp)	N/(l'*sp)	Mu	l'	fvd	Vt scorr.	Vt fess.diag.	
SLV 1	500	-38358	6627	-1331	1638507	116903	1.84	1.84	4610925	298.44	0.7	14635	15052	
SLV 1	1060	-12979	690	227	-371440	149	0.62	0.62	1809247	298.44	0.46	9559	10428	
SLV 2	500	-40777	5364	-1332	1392921	116948	1.95	1.95	4827092	298.44	0.72	15119	15420	
SLV 2	1060	-13096	-81	227	-352058	151	0.63	0.63	1824391	298.44	0.46	9583	10454	
SLV 3	500	-48148	-1140	-1119	224307	99378	2.3	2.3	5431279	298.44	0.79	16593	16493	
SLV 3	1060	-13510	-1092	154	-295162	-134	0.65	0.65	1877837	298.44	0.46	9665	10545	
SLV 4	500	-50567	-2404	-1121	-21279	99423	2.42	2.42	5611626	298.44	0.82	17077	16830	
SLV 4	1060	-13627	-1863	154	-275780	-132	0.65	0.65	1892887	298.44	0.46	9689	10571	
SLV 5	500	-31940	13563	-537	2901107	55746	1.53	2.6	3994496	175.17	0.85	10475	14027	
SLV 5	1060	-12414	1620	142	-441041	83	0.59	0.59	1735783	298.44	0.45	9446	10301	
SLV 6	500	-34634	12155	-538	2627613	55796	1.66	2.25	4260816	220.05	0.78	12061	14466	
SLV 6	1060	-12544	762	142	-419456	85	0.6	0.6	1752757	298.44	0.45	9472	10331	
SLV 7	500	-64575	-12329	167	-1812893	-2671	3.09	3.09	6481987	298.44	0.95	19878	18662	
SLV 7	1060	-14183	-4322	-101	-186780	-859	0.68	0.68	1964272	298.44	0.47	9800	10693	
SLV 8	500	-67268	-13736	165	-2086387	-2621	3.22	3.22	6615338	298.44	0.98	20417	18994	
SLV 8	1060	-14314	-5180	-101	-165196	-857	0.69	0.69	1980898	298.44	0.47	9826	10721	
SLV 9	500	-36347	11678	355	2557176	-14197	1.74	2.19	4424510	236.59	0.77	12790	14739	
SLV 9	1060	-12466	597	-3	-423476	-256	0.6	0.6	1742605	298.44	0.45	9457	10313	
SLV 10	500	-39041	10271	353	2283682	-14146	1.87	2.05	4672873	272.17	0.74	14159	15157	
SLV 10	1060	-12596	-261	-3	-401892	-253	0.6	0.6	1759569	298.44	0.45	9483	10342	
SLV 11	500	-68982	-14213	1058	-2156824	-72614	3.3	3.3	6694451	298.44	0.99	20760	19202	
SLV 11	1060	-14236	-5345	-246	-169216	-1198	0.68	0.68	1970954	298.44	0.47	9811	10704	
SLV 12	500	-71675	-15620	1057	-2430318	-72563	3.43	3.43	6809845	298.44	1.02	21299	19525	
SLV 12	1060	-14366	-6203	-246	-147632	-1196	0.69	0.69	1987569	298.44	0.47	9837	10732	
SLV 13	500	-53049	346	1641	492068	-116240	2.54	2.54	5787442	298.44	0.84	17573	17169	
SLV 13	1060	-13153	-2720	-257	-312893	-980	0.63	0.63	1831822	298.44	0.46	9594	10467	
SLV 14	500	-55467	-918	1640	246482	-116195	2.66	2.66	5949860	298.44	0.86	18057	17493	
SLV 14	1060	-13270	-3491	-257	-293511	-978	0.64	0.64	1846935	298.44	0.46	9617	10493	
SLV 15	500	-62839	-7421	1852	-922132	-133765	3.01	3.01	6390247	298.44	0.93	19531	18445	
SLV 15	1060	-13684	-4502	-330	-236615	-1263	0.66	0.66	1900272	298.44	0.46	9700	10584	
SLV 16	500	-65258	-8685	1851	-1167718	-133720	3.12	3.12	6516845	298.44	0.96	20015	18747	
SLV 16	1060	-13801	-5273	-330	-217233	-1261	0.66	0.66	1915291	298.44	0.47	9724	10609	

Verifica a pressoflessione fuori piano D.M. 14-01-08 (N.T.C.)
quota 730 Ta 0 Wa 0.15 denominatore 8

comb.	fd	Sa	x	N	M	Mc	c.s.	
SLV 1	11	0.39	10.76	-30332	159078	898399	5.65	
SLV 2	11	0.39	11.45	-32271	159078	944752	5.94	
SLV 3	11	0.39	13.81	-38929	159078	1093687	6.88	
SLV 4	11	0.39	14.5	-40869	159078	1134122	7.13	
SLV 5	11	0.39	7.49	-21098	159078	659480	4.15	
SLV 6	11	0.39	8.25	-23259	159078	718093	4.51	
SLV 7	11	0.39	17.65	-49758	159078	1302326	8.19	
SLV 8	11	0.39	18.42	-51918	159078	1338972	8.42	
SLV 9	11	0.39	7.76	-21877	159078	680788	4.28	
SLV 10	11	0.39	8.53	-24037	159078	738804	4.64	
SLV 11	11	0.39	17.93	-50536	159078	1315720	8.27	
SLV 12	11	0.39	18.7	-52697	159078	1351769	8.5	
SLV 13	11	0.39	11.68	-32926	159078	960091	6.04	
SLV 14	11	0.39	12.37	-34866	159078	1004658	6.32	
SLV 15	11	0.39	14.73	-41524	159078	1147464	7.21	
SLV 16	11	0.39	15.42	-43464	159078	1186114	7.46	

Verifica dei meccanismi locali di collasso con analisi cinematica lineare
accelerazione limite = 196,01; forza di aggancio al piano = 30

combinazione	N top	N base	V orto	alfa0	M*	e*	a0*	
SLV 1	-12979	-38358	227	0.481	30.952	0.89	393	
SLV 2	-13096	-40777	227	0.479	31.061	0.89	391	
SLV 3	-13510	-48148	154	0.475	31.449	0.89	388	
SLV 4	-13627	-50567	154	0.473	31.559	0.89	386	
SLV 5	-12414	-31940	142	0.494	30.426	0.89	404	
SLV 6	-12544	-34634	142	0.492	30.547	0.89	402	
SLV 7	-14183	-64575	-101	0.466	32.084	0.891	380	
SLV 8	-14314	-67268	-101	0.464	32.207	0.891	378	
SLV 9	-12466	-36347	-3	0.5	30.474	0.89	408	
SLV 10	-12596	-39041	-3	0.497	30.596	0.89	406	
SLV 11	-14236	-68982	-246	0.46	32.133	0.891	375	
SLV 12	-14366	-71675	-246	0.458	32.256	0.891	373	
SLV 13	-13153	-53049	-257	0.477	31.115	0.89	389	
SLV 14	-13270	-55467	-257	0.475	31.225	0.89	387	
SLV 15	-13684	-62839	-330	0.465	31.613	0.891	379	
SLV 16	-13801	-65258	-330	0.463	31.723	0.891	378	

Maschio 43
Maschio considerato membratura sismica secondaria
Dati geometrici

X ini.	Y ini.	X fin.	Y fin.	quota i.	quota.s	l	sp.	h netta	h ini.	h fin.	a
680	1530	680	1445	L2	L3	85	70	460	560	560	

Materiale: Muratura in pietrame consolidata con iniezioni LC1
f medio 30
tau 0.9
E 24000
G 8053.69
Fattore di confidenza 1.35

Verifica a pressoflessione per azioni non sismiche 4.5.6.2 D.M. 14-01-08 (N.T.C.) gammaM 3

comb.	quota	N	M	p	es1	es2	ea	ev	e ver (cm)	Ft	Fl	Nu (daN)	
1	1060	-2724	13002	1	0	0.75	2.3	0,00	3,05	0,80	0,82	29121	
1	730	-7957	54891	1	0	0.75	2.3	0,00	2,30	0,83	0,75	27455	

comb.	quota	N	M	p	es1	es2	ea	ev	e ver (cm)	Ft	Fl	Nu (daN)	
1	500	-11793	51522	1	0	0.75	2.3	0,00	3,05	0,80	0,84	29645	
2	1060	-3086	14419	1	0	0.75	2.3	0,00	3,05	0,80	0,83	29247	
2	730	-8406	59193	1	0	0.75	2.3	0,00	2,30	0,83	0,74	27238	
2	500	-12229	56379	1	0	0.75	2.3	0,00	3,05	0,80	0,83	29329	
3	1060	-3598	16070	1	0	0.75	2.3	0,00	3,05	0,80	0,84	29513	
3	730	-9064	63929	1	0	0.75	2.3	0,00	2,30	0,83	0,74	27230	
3	500	-12921	59736	1	0	0.75	2.3	0,00	3,05	0,80	0,83	29310	
4	1060	-3455	15360	1	0	0.75	2.3	0,00	3,05	0,80	0,84	29542	
4	730	-8897	61657	1	0	0.75	2.3	0,00	2,30	0,83	0,75	27413	
4	500	-12781	56318	1	0	0.75	2.3	0,00	3,05	0,80	0,84	29593	
5	1060	-3636	16069	1	0	0.75	2.3	0,00	3,05	0,80	0,84	29575	
5	730	-9122	63808	1	0	0.75	2.3	0,00	2,30	0,83	0,74	27325	
5	500	-12999	58746	1	0	0.75	2.3	0,00	3,05	0,80	0,83	29445	
6	1060	-3289	13953	1	0	0.75	2.3	0,00	3,05	0,80	0,84	29811	
6	730	-8683	59107	1	0	0.75	2.3	0,00	2,30	0,83	0,75	27578	
6	500	-12525	55484	1	0	0.75	2.3	0,00	3,05	0,80	0,84	29569	
7	1060	-3650	15370	1	0	0.75	2.3	0,00	3,05	0,80	0,85	29850	
7	730	-9132	63409	1	0	0.75	2.3	0,00	2,30	0,83	0,75	27394	
7	500	-12962	60341	1	0	0.75	2.3	0,00	3,05	0,80	0,83	29273	
8	1060	-4162	17020	1	0	0.75	2.3	0,00	3,05	0,80	0,85	30005	
8	730	-9790	68145	1	0	0.75	2.3	0,00	2,30	0,83	0,74	27371	
8	500	-13653	63698	1	0	0.75	2.3	0,00	3,05	0,80	0,83	29258	
9	1060	-4020	16311	1	0	0.75	2.3	0,00	3,05	0,80	0,85	30048	
9	730	-9623	65872	1	0	0.75	2.3	0,00	2,30	0,83	0,75	27527	
9	500	-13513	60280	1	0	0.75	2.3	0,00	3,05	0,80	0,84	29525	
10	1060	-4201	17019	1	0	0.75	2.3	0,00	3,05	0,80	0,85	30055	
10	730	-9848	68024	1	0	0.75	2.3	0,00	2,30	0,83	0,75	27443	
10	500	-13731	62708	1	0	0.75	2.3	0,00	3,05	0,80	0,83	29386	
11	1060	-3541	16903	1	0	0.75	2.3	0,00	3,05	0,80	0,82	29121	
11	730	-10344	71358	1	0	0.75	2.3	0,00	2,30	0,83	0,75	27455	
11	500	-15331	66979	1	0	0.75	2.3	0,00	3,05	0,80	0,84	29645	
12	1060	-3903	18320	1	0	0.75	2.3	0,00	3,05	0,80	0,83	29221	
12	730	-10793	75660	1	0	0.75	2.3	0,00	2,30	0,83	0,74	27305	
12	500	-15767	71835	1	0	0.75	2.3	0,00	3,05	0,80	0,83	29400	
13	1060	-4415	19970	1	0	0.75	2.3	0,00	3,05	0,80	0,83	29440	
13	730	-11451	80396	1	0	0.75	2.3	0,00	2,30	0,83	0,74	27255	
13	500	-16459	75192	1	0	0.75	2.3	0,00	3,05	0,80	0,83	29382	
14	1060	-4273	19261	1	0	0.75	2.3	0,00	3,05	0,80	0,83	29462	
14	730	-11284	78124	1	0	0.75	2.3	0,00	2,30	0,83	0,75	27422	
14	500	-16319	71774	1	0	0.75	2.3	0,00	3,05	0,80	0,84	29604	
15	1060	-4453	19969	1	0	0.75	2.3	0,00	3,05	0,80	0,84	29492	
15	730	-11509	80275	1	0	0.75	2.3	0,00	2,30	0,83	0,74	27352	
15	500	-16537	74203	1	0	0.75	2.3	0,00	3,05	0,80	0,84	29488	
16	1060	-4106	17854	1	0	0.75	2.3	0,00	3,05	0,80	0,84	29674	
16	730	-11070	75574	1	0	0.75	2.3	0,00	2,30	0,83	0,75	27552	
16	500	-16063	70941	1	0	0.75	2.3	0,00	3,05	0,80	0,84	29586	
17	1060	-4467	19271	1	0	0.75	2.3	0,00	3,05	0,80	0,84	29716	
17	730	-11519	79876	1	0	0.75	2.3	0,00	2,30	0,83	0,75	27407	
17	500	-16499	75798	1	0	0.75	2.3	0,00	3,05	0,80	0,83	29353	
18	1060	-4980	20921	1	0	0.75	2.3	0,00	3,05	0,80	0,85	29860	
18	730	-12177	84612	1	0	0.75	2.3	0,00	2,30	0,83	0,74	27388	
18	500	-17191	79154	1	0	0.75	2.3	0,00	3,05	0,80	0,83	29338	
19	1060	-4837	20212	1	0	0.75	2.3	0,00	3,05	0,80	0,85	29891	
19	730	-12010	82340	1	0	0.75	2.3	0,00	2,30	0,83	0,75	27513	
19	500	-17051	75736	1	0	0.75	2.3	0,00	3,05	0,80	0,84	29550	
20	1060	-5018	20920	1	0	0.75	2.3	0,00	3,05	0,80	0,85	29902	
20	730	-12235	84491	1	0	0.75	2.3	0,00	2,30	0,83	0,75	27445	
20	500	-17269	78165	1	0	0.75	2.3	0,00	3,05	0,80	0,83	29439	

Verifica a taglio con rottura per fessurazione diagonale per azioni non sismiche Circ.617 C8.7.1.5 gammaM 3

comb.	quota	Vd	N	ftd	b	sigma0	Vu	c.s.	
SLU 1	750	39	-7551	0.33	1.5	1.27	2899	74.17	
SLU 1	500	-25	-11793	0.33	1.5	1.98	3485	100	
SLU 2	750	40	-8000	0.33	1.5	1.34	2966	74.16	
SLU 2	500	-25	-12229	0.33	1.5	2.06	3540	100	
SLU 3	750	47	-8658	0.33	1.5	1.46	3063	65.7	
SLU 3	500	-29	-12921	0.33	1.5	2.17	3625	100	
SLU 4	750	49	-8491	0.33	1.5	1.43	3039	62.61	
SLU 4	500	-30	-12781	0.33	1.5	2.15	3608	100	
SLU 5	750	49	-8716	0.33	1.5	1.46	3071	62.68	
SLU 5	500	-30	-12999	0.33	1.5	2.18	3634	100	
SLU 6	750	44	-8276	0.33	1.5	1.39	3007	68.68	
SLU 6	500	-27	-12525	0.33	1.5	2.11	3576	100	
SLU 7	750	45	-8726	0.33	1.5	1.47	3072	68.72	
SLU 7	500	-28	-12962	0.33	1.5	2.18	3630	100	
SLU 8	750	51	-9384	0.33	1.5	1.58	3165	61.68	
SLU 8	500	-31	-13653	0.33	1.5	2.29	3713	100	
SLU 9	750	53	-9217	0.33	1.5	1.55	3142	59.02	
SLU 9	500	-32	-13513	0.33	1.5	2.27	3696	100	
SLU 10	750	54	-9441	0.33	1.5	1.59	3173	59.1	
SLU 10	500	-32	-13731	0.33	1.5	2.31	3722	100	
SLU 11	750	51	-9816	0.33	1.5	1.65	3225	63.47	
SLU 11	500	-32	-15331	0.33	1.5	2.58	3907	100	
SLU 12	750	52	-10265	0.33	1.5	1.73	3286	63.52	
SLU 12	500	-32	-15767	0.33	1.5	2.65	3956	100	
SLU 13	750	58	-10923	0.33	1.5	1.84	3373	57.81	
SLU 13	500	-36	-16459	0.33	1.5	2.77	4032	100	
SLU 14	750	60	-10756	0.33	1.5	1.81	3351	55.61	
SLU 14	500	-37	-16319	0.33	1.5	2.74	4017	100	
SLU 15	750	61	-10981	0.33	1.5	1.85	3380	55.68	
SLU 15	500	-37	-16537	0.33	1.5	2.78	4040	100	
SLU 16	750	56	-10542	0.33	1.5	1.77	3323	59.85	
SLU 16	500	-35	-16063	0.33	1.5	2.7	3988	100	
SLU 17	750	56	-10991	0.33	1.5	1.85	3382	59.93	
SLU 17	500	-35	-16499	0.33	1.5	2.77	4036	100	
SLU 18	750	63	-11649	0.33	1.5	1.96	3467	54.98	
SLU 18	500	-39	-17191	0.33	1.5	2.89	4111	100	
SLU 19	750	65	-11482	0.33	1.5	1.93	3445	53.03	
SLU 19	500	-40	-17051	0.33	1.5	2.87	4096	100	
SLU 20	750	65	-11706	0.33	1.5	1.97	3474	53.1	
SLU 20	500	-40	-17269	0.33	1.5	2.9	4120	100	

Verifica a pressoflessione fuori piano D.M. 14-01-08 (N.T.C.)
quota 730 Ta 0.06 Wa 0.15 denominatore 8

comb.	fd	Sa	x	N	M	Mc	c.s.	
SLV 1	11	0.52	10.97	-8810	59494	259999	4.37	
SLV 2	11	0.52	10.92	-8763	59494	258876	4.35	
SLV 3	11	0.52	11.19	-8984	59494	264173	4.44	
SLV 4	11	0.52	11.13	-8937	59494	263059	4.42	
SLV 5	11	0.52	10.51	-8437	59494	250970	4.22	
SLV 6	11	0.52	10.45	-8385	59494	249694	4.2	
SLV 7	11	0.52	11.23	-9019	59494	265003	4.45	
SLV 8	11	0.52	11.17	-8967	59494	263765	4.43	
SLV 9	11	0.52	10.33	-8291	59494	247360	4.16	
SLV 10	11	0.52	10.26	-8239	59494	246075	4.14	
SLV 11	11	0.52	11.05	-8872	59494	261500	4.4	
SLV 12	11	0.52	10.99	-8820	59494	260252	4.37	
SLV 13	11	0.52	10.36	-8320	59494	248090	4.17	
SLV 14	11	0.52	10.31	-8273	59494	246937	4.15	
SLV 15	11	0.52	10.58	-8495	59494	252369	4.24	
SLV 16	11	0.52	10.52	-8448	59494	251227	4.22	

Verifica dei meccanismi locali di collasso con analisi cinematica lineare
accelerazione limite = 196,01; forza di aggancio al piano = 30

combinazione	N top	N base	V orto	alfa0	M*	e*	a0*	
SLV 1	-3276	-13047	50	0.51	8.426	0.889	417	
SLV 2	-3270	-12973	54	0.51	8.421	0.889	417	
SLV 3	-3279	-12658	43	0.511	8.429	0.889	418	
SLV 4	-3273	-12584	46	0.511	8.424	0.889	418	
SLV 5	-3253	-13270	21	0.516	8.405	0.889	422	
SLV 6	-3247	-13187	25	0.516	8.399	0.889	422	
SLV 7	-3263	-11972	-5	0.518	8.414	0.889	424	
SLV 8	-3257	-11890	-2	0.519	8.409	0.889	424	
SLV 9	-3236	-13068	-12	0.519	8.389	0.889	424	
SLV 10	-3230	-12985	-8	0.52	8.384	0.889	425	
SLV 11	-3246	-11770	-38	0.514	8.399	0.889	420	
SLV 12	-3240	-11688	-35	0.515	8.393	0.889	421	
SLV 13	-3220	-12374	-59	0.513	8.375	0.889	419	
SLV 14	-3215	-12300	-56	0.513	8.37	0.889	420	
SLV 15	-3223	-11984	-67	0.511	8.377	0.889	418	
SLV 16	-3218	-11911	-64	0.512	8.373	0.889	419	

Maschio 44
Dati geometrici

X ini.	Y ini.	X fin.	Y fin.	quota i.	quota.s	l	sp.	h netta	h ini.	h fin.	a
390	135	780	135	L2	L3	390	70	460	560	560	

Materiale: Muratura in pietrame consolidata con iniezioni LC1
f medio 30
tau 0.9
E 24000
G 8053.69
Fattore di confidenza 1.35

Verifica a pressoflessione per azioni non sismiche 4.5.6.2 D.M. 14-01-08 (N.T.C.) gammaM 3

comb.	quota	N	M	p	es1	es2	ea	ev	e ver (cm)	Ft	Fl	Nu (daN)	
1	1060	-6514	-49088	1	0	7.78	2.3	0,00	10,08	0,56	0,94	106817	
1	730	-35469	117036	1	0	7.78	2.3	0,00	5,04	0,71	0,97	140479	
1	500	-46776	1360896	1	0	7.78	2.3	0,00	10,08	0,56	0,77	87213	
2	1060	-7354	-49380	1	0	7.83	2.3	0,00	10,13	0,56	0,95	107294	
2	730	-36666	105058	1	0	7.83	2.3	0,00	5,07	0,71	0,98	140757	
2	500	-47792	1385444	1	0	7.83	2.3	0,00	10,13	0,56	0,77	87090	
3	1060	-8525	-49637	1	0	7.89	2.3	0,00	10,19	0,56	0,95	107791	
3	730	-38269	64711	1	0	7.89	2.3	0,00	5,09	0,71	0,99	141851	
3	500	-49117	1393798	1	0	7.89	2.3	0,00	10,19	0,56	0,77	87392	
4	1060	-8187	-49454	1	0	7.88	2.3	0,00	10,18	0,56	0,95	107657	
4	730	-37759	59396	1	0	7.88	2.3	0,00	5,09	0,71	0,99	142040	
4	500	-48670	1372830	1	0	7.88	2.3	0,00	10,18	0,56	0,77	87597	
5	1060	-8607	-49600	1	0	7.9	2.3	0,00	10,20	0,56	0,95	107818	
5	730	-38358	53407	1	0	7.9	2.3	0,00	5,10	0,71	0,99	142172	
5	500	-49178	1385104	1	0	7.9	2.3	0,00	10,20	0,56	0,77	87561	
6	1060	-8948	-55144	1	0	6.82	2.3	0,00	9,12	0,59	0,95	113115	
6	730	-38932	67221	1	0	6.82	2.3	0,00	4,56	0,73	0,99	146499	
6	500	-49728	1421246	1	0	6.82	2.3	0,00	9,12	0,59	0,77	91777	
7	1060	-9787	-55436	1	0	6.94	2.3	0,00	9,24	0,59	0,95	112950	
7	730	-40129	55244	1	0	6.94	2.3	0,00	4,62	0,73	0,99	146384	
7	500	-50744	1445795	1	0	6.94	2.3	0,00	9,24	0,59	0,77	91344	
8	1060	-10959	-55693	1	0	7.08	2.3	0,00	9,38	0,58	0,96	112752	
8	730	-41732	14896	1	0	7.08	2.3	0,00	4,69	0,73	1,00	146966	
8	500	-52069	1454149	1	0	7.08	2.3	0,00	9,38	0,58	0,78	91272	
9	1060	-10621	-55510	1	0	7.05	2.3	0,00	9,35	0,58	0,96	112801	
9	730	-41223	9582	1	0	7.05	2.3	0,00	4,67	0,73	1,00	147268	
9	500	-51621	1433181	1	0	7.05	2.3	0,00	9,35	0,58	0,78	91576	
10	1060	-11041	-55656	1	0	7.09	2.3	0,00	9,39	0,58	0,96	112737	
10	730	-41821	3593	1	0	7.09	2.3	0,00	4,70	0,73	1,00	147241	
10	500	-52129	1445455	1	0	7.09	2.3	0,00	9,39	0,58	0,78	91416	
11	1060	-8468	-63815	1	0	7.78	2.3	0,00	10,08	0,56	0,94	106817	
11	730	-46110	152147	1	0	7.78	2.3	0,00	5,04	0,71	0,97	140479	
11	500	-60809	1769164	1	0	7.78	2.3	0,00	10,08	0,56	0,77	87213	
12	1060	-9308	-64107	1	0	7.82	2.3	0,00	10,12	0,56	0,94	107194	
12	730	-47306	140169	1	0	7.82	2.3	0,00	5,06	0,71	0,98	140692	
12	500	-61825	1793713	1	0	7.82	2.3	0,00	10,12	0,56	0,77	87114	
13	1060	-10479	-64363	1	0	7.87	2.3	0,00	10,17	0,56	0,95	107611	
13	730	-48910	99821	1	0	7.87	2.3	0,00	5,08	0,71	0,98	141539	
13	500	-63150	1802067	1	0	7.87	2.3	0,00	10,17	0,56	0,77	87336	

comb.	quota	N	M	p	es1	es2	ea	ev	e ver (cm)	Ft	Fl	Nu (daN)	
14	1060	-10141	-64181	1	0	7.86	2.3	0,00	10,16	0,56	0,95	107496	
14	730	-48400	94507	1	0	7.86	2.3	0,00	5,08	0,71	0,98	141686	
14	500	-62702	1781099	1	0	7.86	2.3	0,00	10,16	0,56	0,77	87498	
15	1060	-10561	-64327	1	0	7.87	2.3	0,00	10,17	0,56	0,95	107634	
15	730	-48998	88518	1	0	7.87	2.3	0,00	5,09	0,71	0,99	141790	
15	500	-63210	1793373	1	0	7.87	2.3	0,00	10,17	0,56	0,77	87466	
16	1060	-10902	-69870	1	0	6.99	2.3	0,00	9,29	0,58	0,95	111977	
16	730	-49573	102332	1	0	6.99	2.3	0,00	4,65	0,73	0,98	145347	
16	500	-63761	1829515	1	0	6.99	2.3	0,00	9,29	0,58	0,77	90935	
17	1060	-11742	-70163	1	0	7.08	2.3	0,00	9,38	0,58	0,95	111920	
17	730	-50770	90355	1	0	7.08	2.3	0,00	4,69	0,73	0,99	145295	
17	500	-64777	1854063	1	0	7.08	2.3	0,00	9,38	0,58	0,77	90625	
18	1060	-12913	-70419	1	0	7.19	2.3	0,00	9,49	0,58	0,96	111844	
18	730	-52373	50007	1	0	7.19	2.3	0,00	4,74	0,73	0,99	145796	
18	500	-66102	1862417	1	0	7.19	2.3	0,00	9,49	0,58	0,77	90586	
19	1060	-12575	-70237	1	0	7.16	2.3	0,00	9,46	0,58	0,96	111861	
19	730	-51863	44692	1	0	7.16	2.3	0,00	4,73	0,73	0,99	146023	
19	500	-65654	1841449	1	0	7.16	2.3	0,00	9,46	0,58	0,78	90820	
20	1060	-12995	-70383	1	0	7.2	2.3	0,00	9,50	0,58	0,96	111837	
20	730	-52462	38703	1	0	7.2	2.3	0,00	4,75	0,73	0,99	146016	
20	500	-66162	1853723	1	0	7.2	2.3	0,00	9,50	0,58	0,78	90700	

Verifica a taglio con rottura per fessurazione diagonale per azioni non sismiche Circ.617 C8.7.1.5 gammaM 3

comb.	quota	Vd	N	ftd	b	sigma0	Vu	c.s.	
SLU 1	750	221	-33418	0.33	1.18	1.22	16677	75.57	
SLU 1	600	225	-42052	0.33	1.18	1.54	18292	81.13	
SLU 2	750	202	-34615	0.33	1.18	1.27	16910	83.76	
SLU 2	600	207	-43236	0.33	1.18	1.58	18502	89.53	
SLU 3	750	111	-36215	0.33	1.18	1.33	17217	100	
SLU 3	600	116	-44823	0.33	1.18	1.64	18781	100	
SLU 4	750	91	-35704	0.33	1.18	1.31	17119	100	
SLU 4	600	96	-44319	0.33	1.18	1.62	18693	100	
SLU 5	750	82	-36302	0.33	1.18	1.33	17233	100	
SLU 5	600	86	-44911	0.33	1.18	1.65	18796	100	
SLU 6	750	144	-36884	0.33	1.18	1.35	17343	100	
SLU 6	600	148	-45495	0.33	1.18	1.67	18898	100	
SLU 7	750	125	-38080	0.33	1.18	1.39	17567	100	
SLU 7	600	130	-46679	0.33	1.18	1.71	19101	100	
SLU 8	750	34	-39680	0.33	1.18	1.45	17863	100	
SLU 8	600	39	-48266	0.33	1.18	1.77	19371	100	
SLU 9	750	14	-39170	0.33	1.18	1.43	17769	100	
SLU 9	600	19	-47762	0.33	1.18	1.75	19286	100	
SLU 10	750	5	-39768	0.33	1.18	1.46	17879	100	
SLU 10	600	9	-48354	0.33	1.18	1.77	19386	100	
SLU 11	750	287	-43444	0.33	1.18	1.59	18539	64.62	
SLU 11	600	293	-54668	0.33	1.18	2	20423	69.68	
SLU 12	750	268	-44640	0.33	1.18	1.64	18749	69.94	
SLU 12	600	274	-55852	0.33	1.18	2.05	20612	75.15	
SLU 13	750	178	-46240	0.33	1.18	1.69	19026	100	
SLU 13	600	184	-57439	0.33	1.18	2.1	20862	100	
SLU 14	750	157	-45729	0.33	1.18	1.68	18938	100	
SLU 14	600	164	-56935	0.33	1.18	2.09	20783	100	
SLU 15	750	148	-46328	0.33	1.18	1.7	19041	100	
SLU 15	600	154	-57527	0.33	1.18	2.11	20876	100	
SLU 16	750	210	-46909	0.33	1.18	1.72	19141	91.24	
SLU 16	600	216	-58111	0.33	1.18	2.13	20968	97.05	
SLU 17	750	191	-48106	0.33	1.18	1.76	19344	100	
SLU 17	600	197	-59295	0.33	1.18	2.17	21151	100	
SLU 18	750	100	-49706	0.33	1.18	1.82	19613	100	
SLU 18	600	107	-60881	0.33	1.18	2.23	21395	100	
SLU 19	750	80	-49195	0.33	1.18	1.8	19527	100	
SLU 19	600	86	-60377	0.33	1.18	2.21	21318	100	
SLU 20	750	71	-49793	0.33	1.18	1.82	19627	100	
SLU 20	600	77	-60969	0.33	1.18	2.23	21409	100	

Verifica a pressoflessione nel piano (7.8.2.2) e taglio con rottura per fessurazione diagonale (C8.7.1.5), gammaM = 2

comb.	quota	N	V par	V orto	M	M orto	N/(l*sp)	N/(l'*sp)	Mu	l'	fvd	Vt scorr.	Vt fess.diag.	
SLV 1	500	-54712	-2784	-229	1451479	-99457	2	2	8404935	390	0.73	20042	25899	
SLV 1	1060	-9038	4883	-141	1369	25	0.33	0.33	1700617	390	0.4	10908	14920	
SLV 2	500	-56826	-4296	-211	1342320	-103072	2.08	2.08	8638823	390	0.75	20465	26296	
SLV 2	1060	-9204	3635	-142	36880	26	0.34	0.34	1730739	390	0.4	10941	14975	
SLV 3	500	-55928	-3254	1054	1025628	-165868	2.05	2.05	8540268	390	0.74	20286	26128	
SLV 3	1060	-8775	4440	-285	-33933	30	0.32	0.32	1652970	390	0.4	10855	14834	
SLV 4	500	-58042	-4765	1072	916469	-169483	2.13	2.13	8770269	390	0.76	20708	26522	
SLV 4	1060	-8942	3192	-286	1578	31	0.33	0.33	1683158	390	0.4	10888	14888	
SLV 5	500	-48096	2973	-1809	2108186	29634	1.76	1.76	7629178	390	0.69	18719	24614	
SLV 5	1060	-8972	5488	171	2268	8	0.33	0.33	1688575	390	0.4	10894	14898	
SLV 6	500	-50450	1290	-1789	1986623	25608	1.85	1.85	7912777	390	0.7	19190	25078	
SLV 6	1060	-9157	4098	170	41814	9	0.34	0.34	1722135	390	0.4	10931	14959	
SLV 7	500	-52148	1407	2468	688685	-191736	1.91	1.91	8112150	390	0.72	19530	25409	
SLV 7	1060	-8097	4012	-310	-115408	24	0.3	0.3	1529260	390	0.39	10719	14607	
SLV 8	500	-54502	-276	2488	567121	-195762	2	2	8381320	390	0.73	20000	25859	
SLV 8	1060	-8282	2623	-311	-75861	25	0.3	0.3	1563065	390	0.39	10756	14669	
SLV 9	500	-43743	7364	-1879	2239911	73696	1.6	1.6	7082738	390	0.65	17849	23730	
SLV 9	1060	-8660	5504	294	-30536	-2	0.32	0.32	1632025	390	0.4	10832	14795	
SLV 10	500	-46097	5681	-1859	2118348	69670	1.69	1.69	7381836	390	0.67	18319	24212	
SLV 10	1060	-8845	4114	293	9010	-1	0.32	0.32	1665672	390	0.4	10869	14857	
SLV 11	500	-47795	5799	2398	820410	-147674	1.75	1.75	7592390	390	0.68	18659	24554	
SLV 11	1060	-7785	4028	-186	-148211	14	0.29	0.29	1472298	390	0.39	10657	14502	
SLV 12	500	-50149	4115	2418	698847	-151700	1.84	1.84	7877059	390	0.7	19130	25020	
SLV 12	1060	-7970	2638	-188	-108665	16	0.29	0.29	1506191	390	0.39	10694	14565	
SLV 13	500	-40203	11854	-463	1890563	47417	1.47	1.47	6617231	390	0.63	17141	22987	
SLV 13	1060	-8000	4935	270	-107975	-7	0.29	0.29	1511651	390	0.39	10700	14575	
SLV 14	500	-42317	10342	-445	1781404	43802	1.55	1.55	6897511	390	0.64	17563	23434	
SLV 14	1060	-8167	3687	269	-72464	-6	0.3	0.3	1542034	390	0.39	10733	14631	
SLV 15	500	-41419	11384	820	1464713	-18994	1.52	1.52	6779244	390	0.64	17384	23245	
SLV 15	1060	-7738	4492	126	-143277	-2	0.28	0.28	1463592	390	0.39	10648	14486	
SLV 16	500	-43533	9873	838	1355554	-22609	1.59	1.59	7055637	390	0.65	17807	23687	
SLV 16	1060	-7904	3244	124	-107767	-1	0.29	0.29	1494041	390	0.39	10681	14542	

Verifica a pressoflessione fuori piano D.M. 14-01-08 (N.T.C.)
quota 730 Ta 0 Wa 0.15 denominatore 8

comb.	fd	Sa	x	N	M	Mc	c.s.	
SLV 1	11	0.39	12.59	-46356	207886	1330759	6.4	
SLV 2	11	0.39	13.38	-49268	207886	1394881	6.71	
SLV 3	11	0.39	12.02	-44286	207886	1283778	6.18	
SLV 4	11	0.39	12.81	-47198	207886	1349537	6.49	
SLV 5	11	0.39	11.57	-42627	207886	1245282	5.99	
SLV 6	11	0.39	12.45	-45870	207886	1319828	6.35	
SLV 7	11	0.39	9.7	-35727	207886	1077170	5.18	
SLV 8	11	0.39	10.58	-38970	207886	1157791	5.57	
SLV 9	11	0.39	10.18	-37502	207886	1121661	5.4	
SLV 10	11	0.39	11.06	-40745	207886	1200719	5.78	
SLV 11	11	0.39	8.31	-30602	207886	943949	4.54	
SLV 12	11	0.39	9.19	-33845	207886	1029082	4.95	
SLV 13	11	0.39	7.95	-29274	207886	908256	4.37	
SLV 14	11	0.39	8.74	-32186	207886	985883	4.74	
SLV 15	11	0.39	7.39	-27204	207886	851675	4.1	
SLV 16	11	0.39	8.18	-30116	207886	930938	4.48	

Verifica dei meccanismi locali di collasso con analisi cinematica lineare
accelerazione limite = 196,01; forza di aggancio al piano = 30

combinazione	N top	N base	V orto	alfa0	M*	e*	a0*	
SLV 1	-9038	-54712	-141	0.628	33.385	0.893	511	
SLV 2	-9204	-56826	-142	0.624	33.523	0.893	508	
SLV 3	-8775	-55928	-285	0.628	33.168	0.894	510	
SLV 4	-8942	-58042	-286	0.624	33.305	0.893	507	
SLV 5	-8972	-48096	171	0.628	33.33	0.893	511	
SLV 6	-9157	-50450	170	0.624	33.483	0.893	508	
SLV 7	-8097	-52148	-310	0.644	32.617	0.896	522	
SLV 8	-8282	-54502	-311	0.639	32.766	0.895	519	
SLV 9	-8660	-43743	294	0.63	33.074	0.894	512	
SLV 10	-8845	-46097	293	0.626	33.226	0.894	509	
SLV 11	-7785	-47795	-186	0.658	32.368	0.897	533	
SLV 12	-7970	-50149	-188	0.653	32.516	0.896	529	
SLV 13	-8000	-40203	270	0.648	32.539	0.896	526	
SLV 14	-8167	-42317	269	0.644	32.673	0.895	523	
SLV 15	-7738	-41419	126	0.662	32.33	0.897	536	
SLV 16	-7904	-43533	124	0.657	32.462	0.896	533	

Maschio 45
Dati geometrici

X ini.	Y ini.	X fin.	Y fin.	quota i.	quota.s	l	sp.	h netta	h ini.	h fin.	a
900	610	135	610	L2	L3	765	45	460	560	560	

Materiale: Muratura in pietrame consolidata con iniezioni LC1
f medio 30
tau 0.9
E 24000
G 8053.69
Fattore di confidenza 1.35

Verifica a pressoflessione per azioni non sismiche 4.5.6.2 D.M. 14-01-08 (N.T.C.) gammaM 3

comb.	quota	N	M	p	es1	es2	ea	ev	e ver (cm)	Ft	Fl	Nu (daN)	
1	1060	-22405	-645513	1	0	-0.83	2.3	0,00	3,13	0,65	0,88	145268	
1	730	-49608	-1673349	1	0	-0.83	2.3	0,00	2,30	0,70	0,86	153988	
1	500	-69667	-820727	1	0	-0.83	2.3	0,00	3,13	0,65	0,95	156701	
2	1060	-25411	-758120	1	0	-0.83	2.3	0,00	3,13	0,65	0,88	144556	
2	730	-52615	-1856144	1	0	-0.83	2.3	0,00	2,30	0,70	0,86	152862	
2	500	-72117	-884863	1	0	-0.83	2.3	0,00	3,13	0,65	0,95	156347	
3	1060	-29646	-911827	1	0	-0.83	2.3	0,00	3,13	0,65	0,87	143924	
3	730	-57341	-2111459	1	0	-0.83	2.3	0,00	2,30	0,70	0,85	151737	
3	500	-77267	-973287	1	0	-0.83	2.3	0,00	3,13	0,65	0,95	156112	
4	1060	-28456	-865094	1	0	-0.83	2.3	0,00	3,13	0,65	0,88	144174	
4	730	-56359	-2038085	1	0	-0.83	2.3	0,00	2,30	0,70	0,85	152218	
4	500	-77024	-947046	1	0	-0.83	2.3	0,00	3,13	0,65	0,95	156328	
5	1060	-29959	-921397	1	0	-0.83	2.3	0,00	3,13	0,65	0,87	143928	
5	730	-57863	-2129483	1	0	-0.83	2.3	0,00	2,30	0,70	0,85	151752	
5	500	-78249	-979114	1	0	-0.83	2.3	0,00	3,13	0,65	0,95	156172	
6	1060	-26999	-786873	1	0	-0.83	2.3	0,00	3,13	0,65	0,88	145049	
6	730	-55051	-1907856	1	0	-0.83	2.3	0,00	2,30	0,70	0,86	153315	
6	500	-75627	-853825	1	0	-0.83	2.3	0,00	3,13	0,65	0,95	157036	
7	1060	-30005	-899480	1	0	-0.83	2.3	0,00	3,13	0,65	0,88	144468	
7	730	-58058	-2090651	1	0	-0.83	2.3	0,00	2,30	0,70	0,85	152329	
7	500	-78077	-917961	1	0	-0.83	2.3	0,00	3,13	0,65	0,95	156700	
8	1060	-34240	-1053187	1	0	-0.83	2.3	0,00	3,13	0,65	0,87	143931	
8	730	-62784	-2345967	1	0	-0.83	2.3	0,00	2,30	0,70	0,85	151342	
8	500	-83227	-1006385	1	0	-0.83	2.3	0,00	3,13	0,65	0,95	156461	
9	1060	-33050	-1006454	1	0	-0.83	2.3	0,00	3,13	0,65	0,88	144147	
9	730	-61803	-2272592	1	0	-0.83	2.3	0,00	2,30	0,70	0,85	151774	
9	500	-82984	-980145	1	0	-0.83	2.3	0,00	3,13	0,65	0,95	156661	
10	1060	-34552	-1062757	1	0	-0.83	2.3	0,00	3,13	0,65	0,87	143935	
10	730	-63306	-2363990	1	0	-0.83	2.3	0,00	2,30	0,70	0,85	151359	
10	500	-84210	-1012213	1	0	-0.83	2.3	0,00	3,13	0,65	0,95	156512	
11	1060	-29127	-839166	1	0	-0.83	2.3	0,00	3,13	0,65	0,88	145268	
11	730	-64490	-2175354	1	0	-0.83	2.3	0,00	2,30	0,70	0,86	153988	
11	500	-90567	-1066945	1	0	-0.83	2.3	0,00	3,13	0,65	0,95	156701	
12	1060	-32132	-951774	1	0	-0.83	2.3	0,00	3,13	0,65	0,88	144705	
12	730	-67497	-2358149	1	0	-0.83	2.3	0,00	2,30	0,70	0,86	153110	
12	500	-93017	-1131081	1	0	-0.83	2.3	0,00	3,13	0,65	0,95	156426	
13	1060	-36368	-1105481	1	0	-0.83	2.3	0,00	3,13	0,65	0,88	144172	
13	730	-72223	-2613464	1	0	-0.83	2.3	0,00	2,30	0,70	0,85	152200	
13	500	-98167	-1219505	1	0	-0.83	2.3	0,00	3,13	0,65	0,95	156237	

comb.	quota	N	M	p	es1	es2	ea	ev	e ver (cm)	Ft	Fl	Nu (daN)	
14	1060	-35177	-1058748	1	0	-0.83	2.3	0,00	3,13	0,65	0,88	144383	
14	730	-71242	-2540090	1	0	-0.83	2.3	0,00	2,30	0,70	0,85	152587	
14	500	-97925	-1193264	1	0	-0.83	2.3	0,00	3,13	0,65	0,95	156407	
15	1060	-36680	-1115051	1	0	-0.83	2.3	0,00	3,13	0,65	0,88	144173	
15	730	-72745	-2631487	1	0	-0.83	2.3	0,00	2,30	0,70	0,85	152209	
15	500	-99150	-1225332	1	0	-0.83	2.3	0,00	3,13	0,65	0,95	156283	
16	1060	-33721	-980526	1	0	-0.83	2.3	0,00	3,13	0,65	0,88	145092	
16	730	-69934	-2409861	1	0	-0.83	2.3	0,00	2,30	0,70	0,86	153458	
16	500	-96527	-1100043	1	0	-0.83	2.3	0,00	3,13	0,65	0,95	156963	
17	1060	-36726	-1093134	1	0	-0.83	2.3	0,00	3,13	0,65	0,88	144615	
17	730	-72941	-2592656	1	0	-0.83	2.3	0,00	2,30	0,70	0,86	152667	
17	500	-98977	-1164179	1	0	-0.83	2.3	0,00	3,13	0,65	0,95	156699	
18	1060	-40962	-1246841	1	0	-0.83	2.3	0,00	3,13	0,65	0,88	144150	
18	730	-77667	-2847971	1	0	-0.83	2.3	0,00	2,30	0,70	0,85	151849	
18	500	-104127	-1252603	1	0	-0.83	2.3	0,00	3,13	0,65	0,95	156508	
19	1060	-39771	-1200108	1	0	-0.83	2.3	0,00	3,13	0,65	0,88	144337	
19	730	-76685	-2774597	1	0	-0.83	2.3	0,00	2,30	0,70	0,85	152204	
19	500	-103885	-1226363	1	0	-0.83	2.3	0,00	3,13	0,65	0,95	156668	
20	1060	-41274	-1256411	1	0	-0.83	2.3	0,00	3,13	0,65	0,88	144152	
20	730	-78189	-2865995	1	0	-0.83	2.3	0,00	2,30	0,70	0,85	151859	
20	500	-105110	-1258431	1	0	-0.83	2.3	0,00	3,13	0,65	0,95	156548	

Verifica a taglio con rottura per fessurazione diagonale per azioni non sismiche Circ.617 C8.7.1.5 gammaM 3

comb.	quota	Vd	N	ftd	b	sigma0	Vu	c.s.	
SLU 1	750	-249	-47139	0.33	1	1.37	25935	100	
SLU 1	500	1076	-69667	0.33	1	2.02	30514	28.35	
SLU 2	750	499	-50176	0.33	1	1.46	26598	53.32	
SLU 2	500	1876	-72117	0.33	1	2.09	30971	16.51	
SLU 3	750	1400	-54886	0.33	1	1.59	27595	19.71	
SLU 3	500	2817	-77267	0.33	1	2.24	31911	11.33	
SLU 4	750	1039	-53868	0.33	1	1.56	27383	26.36	
SLU 4	500	2421	-77024	0.33	1	2.24	31867	13.16	
SLU 5	750	1413	-55386	0.33	1	1.61	27699	19.61	
SLU 5	500	2821	-78249	0.33	1	2.27	32087	11.38	
SLU 6	750	263	-52593	0.33	1	1.53	27114	100	
SLU 6	500	1660	-75627	0.33	1	2.2	31615	19.05	
SLU 7	750	1011	-55629	0.33	1	1.62	27749	27.46	
SLU 7	500	2459	-78077	0.33	1	2.27	32056	13.03	
SLU 8	750	1912	-60340	0.33	1	1.75	28707	15.01	
SLU 8	500	3400	-83227	0.33	1	2.42	32965	9.69	
SLU 9	750	1551	-59322	0.33	1	1.72	28503	18.38	
SLU 9	500	3004	-82984	0.33	1	2.41	32923	10.96	
SLU 10	750	1925	-60840	0.33	1	1.77	28807	14.97	
SLU 10	500	3404	-84210	0.33	1	2.45	33136	9.73	
SLU 11	750	-323	-61281	0.33	1	1.78	28894	89.38	
SLU 11	500	1399	-90567	0.33	1	2.63	34219	24.46	
SLU 12	750	424	-64318	0.33	1	1.87	29491	69.51	
SLU 12	500	2199	-93017	0.33	1	2.7	34627	15.75	
SLU 13	750	1326	-69028	0.33	1	2.01	30394	22.93	
SLU 13	500	3140	-98167	0.33	1	2.85	35470	11.3	
SLU 14	750	964	-68010	0.33	1	1.98	30201	31.32	
SLU 14	500	2744	-97925	0.33	1	2.84	35431	12.91	
SLU 15	750	1338	-69528	0.33	1	2.02	30488	22.78	
SLU 15	500	3143	-99150	0.33	1	2.88	35629	11.33	
SLU 16	750	189	-66735	0.33	1	1.94	29958	100	
SLU 16	500	1983	-96527	0.33	1	2.8	35204	17.75	
SLU 17	750	936	-69771	0.33	1	2.03	30534	32.62	
SLU 17	500	2782	-98977	0.33	1	2.88	35601	12.8	
SLU 18	750	1837	-74481	0.33	1	2.16	31406	17.09	
SLU 18	500	3723	-104127	0.33	1	3.02	36422	9.78	
SLU 19	750	1476	-73464	0.33	1	2.13	31220	21.15	
SLU 19	500	3327	-103885	0.33	1	3.02	36383	10.93	
SLU 20	750	1850	-74982	0.33	1	2.18	31497	17.03	
SLU 20	500	3727	-105110	0.33	1	3.05	36576	9.81	

Verifica a pressoflessione nel piano (7.8.2.2) e taglio con rottura per fessurazione diagonale (C8.7.1.5), gammaM = 2

comb.	quota	N	V par	V orto	M	M orto	N/(l*sp)	N/(l'*sp)	Mu	l'	fvd	Vt scorr.	Vt fess.diag.	
SLV 1	500	-76376	30087	608	1593637	-31634	2.22	2.22	22351082	765	0.78	26750	40136	
SLV 1	1060	-27229	7157	-108	-1187971	-82	0.79	0.79	9542926	765	0.49	16921	27658	
SLV 2	500	-74476	31747	606	1466853	-31573	2.16	2.16	21961534	765	0.77	26370	39726	
SLV 2	1060	-27192	8828	-109	-1229277	-116	0.79	0.79	9530927	765	0.49	16913	27646	
SLV 3	500	-69651	30998	48	1248950	29693	2.02	2.02	20934197	765	0.74	25405	38667	
SLV 3	1060	-27047	8800	82	-1221366	-171	0.79	0.79	9484772	765	0.49	16884	27601	
SLV 4	500	-67751	32657	46	1122166	29754	1.97	1.97	20514587	765	0.73	25025	38242	
SLV 4	1060	-27009	10471	80	-1262672	-205	0.78	0.78	9472757	765	0.49	16877	27589	
SLV 5	500	-86463	8184	1039	444805	-102426	2.51	2.51	24276959	765	0.84	28768	42243	
SLV 5	1060	-27135	-5847	-322	-837506	17	0.79	0.79	9513026	765	0.49	16902	27629	
SLV 6	500	-84347	10032	1037	303614	-102358	2.45	2.45	23892826	765	0.82	28344	41810	
SLV 6	1060	-27093	-3985	-324	-883506	-20	0.79	0.79	9499654	765	0.49	16894	27616	
SLV 7	500	-64048	11220	-828	-704151	101996	1.86	1.86	19672245	765	0.71	24285	37399	
SLV 7	1060	-26527	-369	309	-948824	-280	0.77	0.77	9318740	765	0.49	16780	27438	
SLV 8	500	-61932	13068	-831	-845342	102064	1.8	1.8	19176517	765	0.69	23861	36909	
SLV 8	1060	-26485	1492	307	-994823	-317	0.77	0.77	9305309	765	0.49	16772	27425	
SLV 9	500	-88292	-9599	848	-890770	-101775	2.56	2.56	24600520	765	0.85	29133	42614	
SLV 9	1060	-26871	-15268	-317	-572514	12	0.78	0.78	9428566	765	0.49	16849	27546	
SLV 10	500	-86176	-7751	846	-1031961	-101708	2.5	2.5	24225493	765	0.83	28710	42185	
SLV 10	1060	-26829	-13406	-319	-618514	-26	0.78	0.78	9415169	765	0.49	16841	27533	
SLV 11	500	-65877	-6563	-1019	-2039726	102647	1.91	1.91	20092270	765	0.72	24650	37818	
SLV 11	1060	-26262	-9790	314	-683832	-285	0.76	0.76	9233901	765	0.49	16727	27355	
SLV 12	500	-63761	-4715	-1022	-2180917	102715	1.85	1.85	19605648	765	0.7	24227	37333	
SLV 12	1060	-26220	-7929	312	-729832	-323	0.76	0.76	9220444	765	0.49	16719	27342	
SLV 13	500	-82472	-29189	-28	-2858279	-29465	2.4	2.4	23543708	765	0.81	27969	41423	
SLV 13	1060	-26347	-24247	-90	-304666	-101	0.77	0.77	9260947	765	0.49	16744	27382	
SLV 14	500	-80572	-27530	-30	-2985062	-29404	2.34	2.34	23181416	765	0.8	27589	41026	
SLV 14	1060	-26309	-22576	-92	-345972	-135	0.76	0.76	9248870	765	0.49	16737	27370	
SLV 15	500	-75748	-28278	-589	-3202965	31862	2.2	2.2	22223287	765	0.77	26625	40001	
SLV 15	1060	-26164	-22604	99	-338061	-190	0.76	0.76	9202414	765	0.49	16708	27324	
SLV 16	500	-73848	-26619	-591	-3329749	31923	2.15	2.15	21830933	765	0.76	26245	39590	
SLV 16	1060	-26126	-20932	98	-379367	-224	0.76	0.76	9190321	765	0.49	16700	27312	

Verifica a pressoflessione fuori piano D.M. 14-01-08 (N.T.C.)
quota 730 Ta 0 Wa 0.1 denominatore 8

comb.	fd	Sa	x	N	M	Mc	c.s.	
SLV 1	11	0.39	8.88	-64133	262142	1158353	4.42	
SLV 2	11	0.39	8.76	-63309	262142	1147087	4.38	
SLV 3	11	0.39	8.32	-60136	262142	1102799	4.21	
SLV 4	11	0.39	8.21	-59313	262142	1091078	4.16	
SLV 5	11	0.39	8.84	-63847	262142	1154457	4.4	
SLV 6	11	0.39	8.71	-62930	262142	1141869	4.36	
SLV 7	11	0.39	6.99	-50525	262142	960155	3.66	
SLV 8	11	0.39	6.87	-49608	262142	945876	3.61	
SLV 9	11	0.39	8.24	-59566	262142	1094691	4.18	
SLV 10	11	0.39	8.12	-58649	262142	1081559	4.13	
SLV 11	11	0.39	6.4	-46244	262142	892494	3.4	
SLV 12	11	0.39	6.27	-45327	262142	877672	3.35	
SLV 13	11	0.39	6.9	-49861	262142	949829	3.62	
SLV 14	11	0.39	6.79	-49038	262142	936937	3.57	
SLV 15	11	0.39	6.35	-45865	262142	886381	3.38	
SLV 16	11	0.39	6.23	-45041	262142	873033	3.33	

Verifica dei meccanismi locali di collasso con analisi cinematica lineare
accelerazione limite = 196,01; forza di aggancio al piano = 30

combinazione	N top	N base	V orto	alfa0	M*	e*	a0*	
SLV 1	-27229	-76376	-108	0.58	56.543	0.894	471	
SLV 2	-27192	-74476	-109	0.58	56.507	0.894	472	
SLV 3	-27047	-69651	82	0.582	56.368	0.894	474	
SLV 4	-27009	-67751	80	0.583	56.332	0.894	474	
SLV 5	-27135	-86463	-322	0.576	56.453	0.894	468	
SLV 6	-27093	-84347	-324	0.576	56.413	0.894	469	
SLV 7	-26527	-64048	309	0.584	55.87	0.893	475	
SLV 8	-26485	-61932	307	0.584	55.83	0.893	475	
SLV 9	-26871	-88292	-317	0.579	56.199	0.893	471	
SLV 10	-26829	-86176	-319	0.58	56.159	0.893	471	
SLV 11	-26262	-65877	314	0.587	55.617	0.893	477	
SLV 12	-26220	-63761	312	0.587	55.577	0.893	478	
SLV 13	-26347	-82472	-90	0.591	55.697	0.893	481	
SLV 14	-26309	-80572	-92	0.591	55.661	0.893	481	
SLV 15	-26164	-75748	99	0.593	55.523	0.893	482	
SLV 16	-26126	-73848	98	0.593	55.487	0.893	483	

Maschio 46
Dati geometrici

X ini.	Y ini.	X fin.	Y fin.	quota i.	quota.s	l	sp.	h netta	h ini.	h fin.	a
740	1530	320	1530	L2	L3	420	70	460	560	560	

Materiale: Muratura in pietrame consolidata con iniezioni LC1
f medio 30
tau 0.9
E 24000
G 8053.69
Fattore di confidenza 1.35

Verifica a pressoflessione per azioni non sismiche 4.5.6.2 D.M. 14-01-08 (N.T.C.) gammaM 3

comb.	quota	N	M	p	es1	es2	ea	ev	e ver (cm)	Ft	Fl	Nu (daN)	
1	1060	-7967	-88513	1	0	7.71	2.3	0,00	10,01	0,56	0,92	112707	
1	730	-37931	-1267142	1	0	7.71	2.3	0,00	5,00	0,72	0,75	117086	
1	500	-52050	-1864713	1	0	7.71	2.3	0,00	10,01	0,56	0,74	90471	
2	1060	-8975	-110177	1	0	7.78	2.3	0,00	10,08	0,56	0,91	111273	
2	730	-39479	-1320480	1	0	7.78	2.3	0,00	5,04	0,71	0,75	116794	
2	500	-53486	-1893135	1	0	7.78	2.3	0,00	10,08	0,56	0,74	90398	
3	1060	-10479	-162103	1	0	7.78	2.3	0,00	10,08	0,56	0,89	108353	
3	730	-43248	-1498002	1	0	7.78	2.3	0,00	5,04	0,71	0,74	115410	
3	500	-56909	-1801579	1	0	7.78	2.3	0,00	10,08	0,56	0,76	93632	
4	1060	-10116	-162692	1	0	7.73	2.3	0,00	10,03	0,56	0,88	108070	
4	730	-43314	-1520745	1	0	7.73	2.3	0,00	5,01	0,71	0,74	115104	
4	500	-56939	-1733919	1	0	7.73	2.3	0,00	10,03	0,56	0,77	94969	
5	1060	-10619	-173524	1	0	7.75	2.3	0,00	10,05	0,56	0,88	107689	
5	730	-44089	-1547414	1	0	7.75	2.3	0,00	5,03	0,71	0,74	115013	
5	500	-57657	-1748130	1	0	7.75	2.3	0,00	10,05	0,56	0,77	94961	
6	1060	-10805	-121068	1	0	6.85	2.3	0,00	9,15	0,59	0,92	117339	
6	730	-42583	-1400024	1	0	6.85	2.3	0,00	4,57	0,73	0,76	120821	
6	500	-56347	-1898067	1	0	6.85	2.3	0,00	9,15	0,59	0,75	95964	
7	1060	-11812	-142732	1	0	6.97	2.3	0,00	9,27	0,58	0,91	115823	
7	730	-44131	-1453363	1	0	6.97	2.3	0,00	4,64	0,73	0,76	120302	
7	500	-57783	-1926489	1	0	6.97	2.3	0,00	9,27	0,58	0,75	95730	
8	1060	-13316	-194657	1	0	7.06	2.3	0,00	9,36	0,58	0,89	112931	
8	730	-47900	-1630885	1	0	7.06	2.3	0,00	4,68	0,73	0,75	118649	
8	500	-61205	-1834933	1	0	7.06	2.3	0,00	9,36	0,58	0,78	98474	
9	1060	-12954	-195247	1	0	7	2.3	0,00	9,30	0,58	0,89	112826	
9	730	-47966	-1653627	1	0	7	2.3	0,00	4,65	0,73	0,74	118362	
9	500	-61236	-1767273	1	0	7	2.3	0,00	9,30	0,58	0,79	99813	
10	1060	-13457	-206079	1	0	7.05	2.3	0,00	9,35	0,58	0,89	112339	
10	730	-48740	-1680297	1	0	7.05	2.3	0,00	4,68	0,73	0,74	118188	
10	500	-61954	-1781484	1	0	7.05	2.3	0,00	9,35	0,58	0,79	99682	
11	1060	-10358	-115067	1	0	7.71	2.3	0,00	10,01	0,56	0,92	112707	
11	730	-49310	-1647284	1	0	7.71	2.3	0,00	5,00	0,72	0,75	117086	
11	500	-67666	-2424127	1	0	7.71	2.3	0,00	10,01	0,56	0,74	90471	
12	1060	-11365	-136731	1	0	7.76	2.3	0,00	10,06	0,56	0,91	111574	
12	730	-50859	-1700623	1	0	7.76	2.3	0,00	5,03	0,71	0,75	116856	
12	500	-69102	-2452549	1	0	7.76	2.3	0,00	10,06	0,56	0,74	90410	
13	1060	-12869	-188657	1	0	7.77	2.3	0,00	10,07	0,56	0,89	109160	
13	730	-54627	-1878145	1	0	7.77	2.3	0,00	5,03	0,71	0,74	115753	
13	500	-72524	-2360993	1	0	7.77	2.3	0,00	10,07	0,56	0,76	92875	

comb.	quota	N	M	p	es1	es2	ea	ev	e ver (cm)	Ft	Fl	Nu (daN)	
14	1060	-12506	-189246	1	0	7.72	2.3	0,00	10,02	0,56	0,89	108956	
14	730	-54694	-1900887	1	0	7.72	2.3	0,00	5,01	0,71	0,74	115353	
14	500	-72554	-2293333	1	0	7.72	2.3	0,00	10,02	0,56	0,77	93931	
15	1060	-13010	-200078	1	0	7.75	2.3	0,00	10,05	0,56	0,89	108610	
15	730	-55468	-1927556	1	0	7.75	2.3	0,00	5,02	0,71	0,74	115274	
15	500	-73272	-2307544	1	0	7.75	2.3	0,00	10,05	0,56	0,77	93932	
16	1060	-13195	-147622	1	0	7	2.3	0,00	9,30	0,58	0,92	116500	
16	730	-53962	-1780167	1	0	7	2.3	0,00	4,65	0,73	0,75	120123	
16	500	-71962	-2457481	1	0	7	2.3	0,00	9,30	0,58	0,75	94827	
17	1060	-14203	-169286	1	0	7.09	2.3	0,00	9,39	0,58	0,91	115303	
17	730	-55510	-1833506	1	0	7.09	2.3	0,00	4,70	0,73	0,75	119739	
17	500	-73398	-2485903	1	0	7.09	2.3	0,00	9,39	0,58	0,75	94676	
18	1060	-15707	-221211	1	0	7.16	2.3	0,00	9,46	0,58	0,90	112910	
18	730	-59279	-2011028	1	0	7.16	2.3	0,00	4,73	0,73	0,75	118443	
18	500	-76820	-2394347	1	0	7.16	2.3	0,00	9,46	0,58	0,77	96906	
19	1060	-15344	-221801	1	0	7.11	2.3	0,00	9,41	0,58	0,89	112823	
19	730	-59345	-2033770	1	0	7.11	2.3	0,00	4,71	0,73	0,75	118212	
19	500	-76851	-2326687	1	0	7.11	2.3	0,00	9,41	0,58	0,78	97969	
20	1060	-15847	-232633	1	0	7.15	2.3	0,00	9,45	0,58	0,89	112410	
20	730	-60120	-2060439	1	0	7.15	2.3	0,00	4,73	0,73	0,75	118073	
20	500	-77569	-2340897	1	0	7.15	2.3	0,00	9,45	0,58	0,78	97884	

Verifica a taglio con rottura per fessurazione diagonale per azioni non sismiche Circ.617 C8.7.1.5 gammaM 3

comb.	quota	Vd	N	ftd	b	sigma0	Vu	c.s.	
SLU 1	750	52	-35513	0.33	1.1	1.21	19240	100	
SLU 1	600	48	-44935	0.33	1.1	1.53	21146	100	
SLU 2	750	258	-37061	0.33	1.1	1.26	19566	75.74	
SLU 2	600	254	-46482	0.33	1.1	1.58	21443	84.34	
SLU 3	750	1477	-40830	0.33	1.1	1.39	20338	13.77	
SLU 3	600	1473	-50236	0.33	1.1	1.71	22147	15.03	
SLU 4	750	1793	-40896	0.33	1.1	1.39	20351	11.35	
SLU 4	600	1789	-50297	0.33	1.1	1.71	22158	12.39	
SLU 5	750	1896	-41671	0.33	1.1	1.42	20506	10.81	
SLU 5	600	1892	-51070	0.33	1.1	1.74	22300	11.79	
SLU 6	750	707	-40165	0.33	1.1	1.37	20204	28.56	
SLU 6	600	703	-49566	0.33	1.1	1.69	22023	31.32	
SLU 7	750	914	-41713	0.33	1.1	1.42	20515	22.44	
SLU 7	600	910	-51114	0.33	1.1	1.74	22308	24.52	
SLU 8	750	2133	-45482	0.33	1.1	1.55	21252	9.96	
SLU 8	600	2129	-54867	0.33	1.1	1.87	22985	10.8	
SLU 9	750	2449	-45548	0.33	1.1	1.55	21265	8.68	
SLU 9	600	2445	-54928	0.33	1.1	1.87	22996	9.41	
SLU 10	750	2552	-46322	0.33	1.1	1.58	21413	8.39	
SLU 10	600	2548	-55702	0.33	1.1	1.89	23133	9.08	
SLU 11	750	67	-46167	0.33	1.1	1.57	21383	100	
SLU 11	600	62	-58415	0.33	1.1	1.99	23607	100	
SLU 12	750	274	-47715	0.33	1.1	1.62	21677	79.17	
SLU 12	600	268	-59963	0.33	1.1	2.04	23873	88.92	
SLU 13	750	1493	-51484	0.33	1.1	1.75	22376	14.99	
SLU 13	600	1487	-63716	0.33	1.1	2.17	24507	16.48	
SLU 14	750	1808	-51550	0.33	1.1	1.75	22388	12.38	
SLU 14	600	1803	-63777	0.33	1.1	2.17	24517	13.6	
SLU 15	750	1912	-52324	0.33	1.1	1.78	22529	11.79	
SLU 15	600	1906	-64551	0.33	1.1	2.2	24646	12.93	
SLU 16	750	723	-50819	0.33	1.1	1.73	22254	30.79	
SLU 16	600	717	-63047	0.33	1.1	2.14	24396	34	
SLU 17	750	930	-52367	0.33	1.1	1.78	22536	24.24	
SLU 17	600	924	-64594	0.33	1.1	2.2	24653	26.68	
SLU 18	750	2148	-56135	0.33	1.1	1.91	23209	10.8	
SLU 18	600	2143	-68348	0.33	1.1	2.32	25268	11.79	
SLU 19	750	2464	-56202	0.33	1.1	1.91	23221	9.42	
SLU 19	600	2459	-68409	0.33	1.1	2.33	25277	10.28	
SLU 20	750	2567	-56976	0.33	1.1	1.94	23357	9.1	
SLU 20	600	2562	-69182	0.33	1.1	2.35	25402	9.91	

Verifica a pressoflessione nel piano (7.8.2.2) e taglio con rottura per fessurazione diagonale (C8.7.1.5), gammaM = 2

comb.	quota	N	V par	V orto	M	M orto	N/(l*sp)	N/(l'*sp)	Mu	l'	fvd	Vt scorr.	Vt fess.diag.	
SLV 1	500	-69267	10035	1463	-868628	-174973	2.36	2.36	10917359	420	0.8	23653	32078	
SLV 1	1060	-10948	-206	-511	-256385	93	0.37	0.37	2208413	420	0.41	11990	17729	
SLV 2	500	-66451	8224	1440	-1061989	-169627	2.26	2.26	10615128	420	0.79	23090	31535	
SLV 2	1060	-10783	-1416	-507	-217786	92	0.37	0.37	2176548	420	0.41	11957	17672	
SLV 3	500	-68049	8413	17	-1342939	-87530	2.31	2.31	10788067	420	0.8	23410	31844	
SLV 3	1060	-10831	-1863	-209	-223278	120	0.37	0.37	2185761	420	0.41	11966	17688	
SLV 4	500	-65233	6603	-5	-1536301	-82184	2.22	2.22	10480649	420	0.78	22847	31298	
SLV 4	1060	-10666	-3073	-205	-184680	119	0.36	0.36	2153866	420	0.41	11933	17631	
SLV 5	500	-62897	5195	2922	-765107	-242045	2.14	2.14	10216448	420	0.76	22379	30837	
SLV 5	1060	-10731	1681	-946	-230366	1	0.37	0.37	2166442	420	0.41	11946	17654	
SLV 6	500	-59762	3179	2897	-980441	-236092	2.03	2.03	9848909	420	0.74	21752	30208	
SLV 6	1060	-10548	334	-942	-187381	0	0.36	0.36	2130893	420	0.41	11910	17590	
SLV 7	500	-58837	-211	-1897	-2346144	49430	2	2	9737631	420	0.73	21567	30020	
SLV 7	1060	-10341	-3841	61	-120011	89	0.35	0.35	2090726	420	0.4	11868	17518	
SLV 8	500	-55702	-2227	-1922	-2561478	55384	1.89	1.89	9350838	420	0.71	20940	29373	
SLV 8	1060	-10158	-5189	66	-77026	88	0.35	0.35	2055068	420	0.4	11832	17453	
SLV 9	500	-56083	-663	2726	-1160102	-211833	1.91	1.91	9398593	420	0.71	21017	29452	
SLV 9	1060	-10420	1583	-1017	-173078	-52	0.35	0.35	2106130	420	0.4	11884	17545	
SLV 10	500	-52948	-2679	2701	-1375436	-205879	1.8	1.8	8998738	420	0.69	20390	28792	
SLV 10	1060	-10237	236	-1012	-130093	-53	0.35	0.35	2070495	420	0.4	11847	17481	
SLV 11	500	-52023	-6069	-2093	-2741140	79643	1.77	1.77	8877925	420	0.69	20205	28595	
SLV 11	1060	-10030	-3939	-9	-62723	37	0.34	0.34	2030230	420	0.4	11806	17409	
SLV 12	500	-48887	-8085	-2118	-2956474	85596	1.66	1.66	8458816	420	0.67	19577	27915	
SLV 12	1060	-9847	-5287	-5	-19738	35	0.33	0.33	1994486	420	0.4	11769	17344	
SLV 13	500	-46551	-9492	810	-2185280	-74265	1.58	1.58	8136854	420	0.65	19110	27397	
SLV 13	1060	-9912	-533	-746	-65425	-82	0.34	0.34	2007143	420	0.4	11782	17367	
SLV 14	500	-43736	-11303	787	-2378641	-68919	1.49	1.49	7737894	420	0.63	18547	26760	
SLV 14	1060	-9747	-1743	-742	-26826	-83	0.33	0.33	1975020	420	0.4	11749	17309	
SLV 15	500	-45333	-11114	-636	-2659591	13178	1.54	1.54	7965712	420	0.64	18867	27124	
SLV 15	1060	-9795	-2189	-444	-32318	-56	0.33	0.33	1984307	420	0.4	11759	17325	
SLV 16	500	-42518	-12924	-658	-2852952	18524	1.45	1.45	7561565	420	0.62	18304	26480	
SLV 16	1060	-9630	-3399	-440	6280	-57	0.33	0.33	1952155	420	0.4	11726	17267	

Verifica a pressoflessione fuori piano D.M. 14-01-08 (N.T.C.)
quota 730 Ta 0 Wa 0.15 denominatore 8

comb.	fd	Sa	x	N	M	Mc	c.s.	
SLV 1	11	0.39	14.51	-57559	223877	1596954	7.13	
SLV 2	11	0.39	13.66	-54202	223877	1526749	6.82	
SLV 3	11	0.39	13.84	-54912	223877	1541831	6.89	
SLV 4	11	0.39	13	-51555	223877	1469386	6.56	
SLV 5	11	0.39	13.14	-52124	223877	1481883	6.62	
SLV 6	11	0.39	12.2	-48386	223877	1398399	6.25	
SLV 7	11	0.39	10.92	-43300	223877	1279180	5.71	
SLV 8	11	0.39	9.97	-39562	223877	1187380	5.3	
SLV 9	11	0.39	11.26	-44656	223877	1311588	5.86	
SLV 10	11	0.39	10.32	-40917	223877	1221065	5.45	
SLV 11	11	0.39	9.03	-35832	223877	1092271	4.88	
SLV 12	11	0.39	8.09	-32093	223877	993431	4.44	
SLV 13	11	0.39	8.23	-32663	223877	1008724	4.51	
SLV 14	11	0.39	7.39	-29306	223877	917450	4.1	
SLV 15	11	0.39	7.57	-30016	223877	936986	4.19	
SLV 16	11	0.39	6.72	-26659	223877	843471	3.77	

Verifica dei meccanismi locali di collasso con analisi cinematica lineare
accelerazione limite = 196,01; forza di aggancio al piano = 30

combinazione	N top	N base	V orto	alfa0	M*	e*	a0*	
SLV 1	-10948	-69267	-511	0.588	36.974	0.891	479	
SLV 2	-10783	-66451	-507	0.591	36.834	0.891	482	
SLV 3	-10831	-68049	-209	0.602	36.875	0.891	491	
SLV 4	-10666	-65233	-205	0.606	36.735	0.892	494	
SLV 5	-10731	-62897	-946	0.575	36.79	0.891	469	
SLV 6	-10548	-59762	-942	0.579	36.635	0.892	472	
SLV 7	-10341	-58837	61	0.618	36.46	0.892	504	
SLV 8	-10158	-55702	66	0.622	36.306	0.892	506	
SLV 9	-10420	-56083	-1017	0.579	36.527	0.892	471	
SLV 10	-10237	-52948	-1012	0.583	36.373	0.892	474	
SLV 11	-10030	-52023	-9	0.627	36.2	0.893	510	
SLV 12	-9847	-48887	-5	0.631	36.047	0.893	514	
SLV 13	-9912	-46551	-746	0.6	36.101	0.893	488	
SLV 14	-9747	-43736	-742	0.604	35.964	0.893	491	
SLV 15	-9795	-45333	-444	0.615	36.004	0.893	500	
SLV 16	-9630	-42518	-440	0.618	35.868	0.893	503	

Maschio 47
Dati geometrici

X ini.	Y ini.	X fin.	Y fin.	quota i.	quota.s	l	sp.	h netta	h ini.	h fin.	a
900	135	1100	135	L2	L3	200	70	460	560	560	

Materiale: Muratura in pietrame consolidata con iniezioni LC1
f medio 30
tau 0.9
E 24000
G 8053.69
Fattore di confidenza 1.35

Rinforzo con rete e betoncino sulla faccia sinistra
Betoncino: C25/30
spessore: 3
acciaio materiale: B450C
BARRE VERTICALI
diametro (mm) 5
passo 20
ancorate ad entrambe le estremità
BARRE ORIZZONTALI
diametro (mm) 5
passo 20
ancorate ad entrambe le estremità

Verifica a pressoflessione nel piano e taglio delle sezioni rinforzate 7.8.3.2 D.M. 14-01-08 (N.T.C.)

comb.	quota sezione	gamma m.	gamma s.	gamma c.	N	V	V orto	M	M orto	c.s.	d	fvd	Vt,c	Vt,M	Vt,S	
SLU 1	500	3	1.15	1.5	-19645	-2736	178	-264380	-37806	9.79	200	0.31	31111	4345	4610	
SLU 1	1060	3	1.15	1.5	-2881	-303	-10	3590	0	66.72	200	0.24	31111	3292	4610	
SLU 2	500	3	1.15	1.5	-20021	-2731	181	-267358	-38497	9.6	200	0.31	31111	4368	4610	
SLU 2	1060	3	1.15	1.5	-3287	-295	-10	3317	0	58.49	200	0.24	31111	3318	4610	
SLU 3	500	3	1.15	1.5	-20668	-2722	188	-270485	-39721	9.3	200	0.31	31111	4409	4610	
SLU 3	1060	3	1.15	1.5	-3859	-272	-11	2709	0	49.82	200	0.24	31111	3353	4610	
SLU 4	500	3	1.15	1.5	-20569	-2723	188	-268847	-39555	9.35	200	0.31	31111	4403	4610	
SLU 4	1060	3	1.15	1.5	-3699	-270	-11	2721	0	51.98	200	0.24	31111	3343	4610	
SLU 5	500	3	1.15	1.5	-20757	-2721	190	-270336	-39900	9.26	200	0.32	31111	4415	4610	
SLU 5	1060	3	1.15	1.5	-3901	-266	-11	2585	0	49.28	200	0.24	31111	3356	4610	
SLU 6	500	3	1.15	1.5	-20824	-2727	190	-273251	-40043	9.23	200	0.32	31111	4419	4610	
SLU 6	1060	3	1.15	1.5	-4086	-290	-11	2981	0	47.05	200	0.24	31111	3368	4610	
SLU 7	500	3	1.15	1.5	-21200	-2722	193	-276229	-40734	9.07	200	0.32	31111	4442	4610	
SLU 7	1060	3	1.15	1.5	-4492	-282	-11	2708	0	42.8	200	0.24	31111	3393	4610	
SLU 8	500	3	1.15	1.5	-21846	-2713	200	-279356	-41958	8.8	200	0.32	31111	4483	4610	
SLU 8	1060	3	1.15	1.5	-5064	-259	-11	2099	0	37.96	200	0.24	31111	3429	4610	
SLU 9	500	3	1.15	1.5	-21747	-2714	200	-277718	-41791	8.84	200	0.32	31111	4477	4610	
SLU 9	1060	3	1.15	1.5	-4904	-257	-11	2112	0	39.2	200	0.24	31111	3419	4610	
SLU 10	500	3	1.15	1.5	-21935	-2712	202	-279207	-42137	8.76	200	0.32	31111	4489	4610	
SLU 10	1060	3	1.15	1.5	-5106	-253	-11	1975	0	37.65	200	0.25	31111	3432	4610	
SLU 11	500	3	1.15	1.5	-25538	-3556	231	-343694	-49148	7.53	200	0.34	31111	4715	4610	
SLU 11	1060	3	1.15	1.5	-3746	-393	-14	4667	0	51.32	200	0.24	31111	3346	4610	
SLU 12	500	3	1.15	1.5	-25915	-3552	235	-346672	-49839	7.42	200	0.34	31111	4739	4610	
SLU 12	1060	3	1.15	1.5	-4151	-386	-14	4394	0	46.31	200	0.24	31111	3372	4610	

comb.	quota sezione	gamma m.	gamma s.	gamma c.	N	V	V orto	M	M orto	c.s.	d	fvd	Vt,c	Vt,M	Vt,S	
SLU 13	500	3	1.15	1.5	-26561	-3543	242	-349799	-51063	7.24	200	0.34	31111	4779	4610	
SLU 13	1060	3	1.15	1.5	-4723	-363	-14	3786	0	40.7	200	0.24	31111	3408	4610	
SLU 14	500	3	1.15	1.5	-26462	-3544	241	-348161	-50896	7.26	200	0.34	31111	4773	4610	
SLU 14	1060	3	1.15	1.5	-4563	-361	-14	3798	0	42.13	200	0.24	31111	3398	4610	
SLU 15	500	3	1.15	1.5	-26650	-3542	243	-349650	-51242	7.21	200	0.34	31111	4785	4610	
SLU 15	1060	3	1.15	1.5	-4766	-357	-14	3662	0	40.34	200	0.24	31111	3410	4610	
SLU 16	500	3	1.15	1.5	-26717	-3547	243	-352565	-51384	7.2	200	0.34	31111	4789	4610	
SLU 16	1060	3	1.15	1.5	-4951	-380	-14	4058	0	38.83	200	0.24	31111	3422	4610	
SLU 17	500	3	1.15	1.5	-27093	-3543	247	-355543	-52076	7.1	200	0.34	31111	4813	4610	
SLU 17	1060	3	1.15	1.5	-5356	-373	-14	3785	0	35.89	200	0.25	31111	3447	4610	
SLU 18	500	3	1.15	1.5	-27740	-3534	254	-358670	-53300	6.93	200	0.35	31111	4853	4610	
SLU 18	1060	3	1.15	1.5	-5928	-350	-14	3176	0	32.43	200	0.25	31111	3483	4610	
SLU 19	500	3	1.15	1.5	-27641	-3535	253	-357032	-53133	6.95	200	0.35	31111	4847	4610	
SLU 19	1060	3	1.15	1.5	-5768	-348	-14	3189	0	33.33	200	0.25	31111	3473	4610	
SLU 20	500	3	1.15	1.5	-27829	-3533	255	-358521	-53478	6.91	200	0.35	31111	4859	4610	
SLU 20	1060	3	1.15	1.5	-5971	-344	-14	3052	0	32.2	200	0.25	31111	3486	4610	

Verifica a pressoflessione nel piano e taglio delle sezioni rinforzate 7.8.3.2 D.M. 14-01-08 (N.T.C.)

comb.	quota sezione	gamma m.	gamma s.	gamma c.	N	V	V orto	M	M orto	c.s.	d	fvd	Vt,c	Vt,M	Vt,S	
SLV 1	500	2	1.15	1.5	-20170	-5989	-218	-622830	-3345	10.36	190	0.48	44333	6333	4379	
SLV 1	1060	2	1.15	1.5	-3689	-3306	236	69165	-9	58.2	190	0.36	44333	4781	4379	
SLV 2	500	2	1.15	1.5	-20745	-6921	-211	-716506	-4432	9.57	180	0.49	42000	6154	4149	
SLV 2	1060	2	1.15	1.5	-3633	-5027	235	102920	-9	51.74	180	0.36	42000	4542	4149	
SLV 3	500	2	1.15	1.5	-24589	-6112	900	-584478	-89226	9.32	190	0.51	44333	6750	4379	
SLV 3	1060	2	1.15	1.5	-3693	-2634	-217	47217	-23	62.69	200	0.36	46667	5015	4610	
SLV 4	500	2	1.15	1.5	-25164	-7043	907	-678155	-90313	8.75	190	0.51	44333	6804	4379	
SLV 4	1060	2	1.15	1.5	-3637	-4355	-217	80972	-23	56.32	190	0.36	44333	4776	4379	
SLV 5	500	2	1.15	1.5	-13545	-3141	-1633	-396737	101940	15.76	190	0.43	44333	5709	4379	
SLV 5	1060	2	1.15	1.5	-3818	-1513	749	42413	20	61.22	200	0.36	46667	5026	4610	
SLV 6	500	2	1.15	1.5	-14185	-4178	-1624	-501059	100729	13.84	180	0.44	42000	5536	4149	
SLV 6	1060	2	1.15	1.5	-3755	-3430	749	80003	19	55.26	190	0.36	44333	4787	4379	
SLV 7	500	2	1.15	1.5	-28276	-3549	2094	-268899	-184331	8.27	200	0.52	46667	7330	4610	
SLV 7	1060	2	1.15	1.5	-3830	729	-759	-30748	-29	61.02	200	0.36	46667	5027	4610	
SLV 8	500	2	1.15	1.5	-28917	-4587	2102	-373220	-185542	8.08	200	0.53	46667	7391	4610	
SLV 8	1060	2	1.15	1.5	-3767	-1188	-759	6843	-29	62.04	200	0.36	46667	5022	4610	
SLV 9	500	2	1.15	1.5	-12314	-868	-1727	-169155	106249	18.98	200	0.42	46667	5827	4610	
SLV 9	1060	2	1.15	1.5	-3929	613	737	-822	29	59.49	200	0.36	46667	5037	4610	
SLV 10	500	2	1.15	1.5	-12955	-1905	-1718	-273477	105038	18.04	0	0	0	0	0	
SLV 10	1060	2	1.15	1.5	-3866	-1304	737	36768	29	60.45	200	0.36	46667	5031	4610	
SLV 11	500	2	1.15	1.5	-27046	-1276	2000	-41316	-180022	8.64	200	0.52	46667	7214	4610	
SLV 11	1060	2	1.15	1.5	-3941	2855	-771	-73983	-19	59.31	200	0.36	46667	5038	4610	
SLV 12	500	2	1.15	1.5	-27686	-2313	2008	-145638	-181233	8.44	200	0.52	46667	7275	4610	
SLV 12	1060	2	1.15	1.5	-3878	938	-771	-36392	-19	60.26	200	0.36	46667	5032	4610	
SLV 13	500	2	1.15	1.5	-16067	1589	-532	135779	11020	14.55	200	0.44	46667	6180	4610	
SLV 13	1060	2	1.15	1.5	-4059	3780	196	-74951	24	57.58	200	0.36	46667	5049	4610	
SLV 14	500	2	1.15	1.5	-16642	657	-524	42103	9932	14.04	200	0.45	46667	6234	4610	
SLV 14	1060	2	1.15	1.5	-4003	2059	195	-41197	24	58.39	200	0.36	46667	5044	4610	
SLV 15	500	2	1.15	1.5	-20486	1466	586	174131	-74862	11.41	200	0.47	46667	6597	4610	
SLV 15	1060	2	1.15	1.5	-4063	4453	-257	-96900	9	56.35	190	0.36	44333	4816	4379	
SLV 16	500	2	1.15	1.5	-21061	535	594	80454	-75949	11.1	200	0.48	46667	6651	4610	
SLV 16	1060	2	1.15	1.5	-4007	2731	-257	-63145	9	58.33	200	0.36	46667	5044	4610	

Per la verifica a pressoflessione fuori piano non é stato considerato il rinforzo predisposto.
Le motivazioni per cui la sezione di verifica nonostante abbia un rinforzo di tipo FRP non venga condotta come sezione rinforzata possono essere:
- Il rinforzo predisposto non è atto ad essere utilizzato per queste tipologie di verifiche.
- Non sono stati predisposti rinforzi di tipo rete e betoncino oppure FRP sia orizzontali che verticali.
- Non sono stati predisposti rinforzi di tipo rete e betoncino oppure FRP su entrambi i lati.

Verifica a pressoflessione fuori piano D.M. 14-01-08 (N.T.C.)
quota 730 Ta 0 Wa 0.15 denominatore 8

comb.	fd	Sa	x	N	M	Mc	c.s.	
SLV 1	11	0.39	7.03	-13275	106608	417965	3.92	
SLV 2	11	0.39	6.46	-12199	106608	387571	3.64	
SLV 3	11	0.39	7.3	-13781	106608	432059	4.05	
SLV 4	11	0.39	6.73	-12705	106608	401953	3.77	
SLV 5	11	0.39	8.1	-15303	106608	473613	4.44	
SLV 6	11	0.39	7.47	-14105	106608	441012	4.14	
SLV 7	11	0.39	8.99	-16990	106608	518252	4.86	
SLV 8	11	0.39	8.36	-15793	106608	486721	4.57	
SLV 9	11	0.39	9.26	-17495	106608	531314	4.98	
SLV 10	11	0.39	8.63	-16297	106608	500104	4.69	
SLV 11	11	0.39	10.16	-19183	106608	573994	5.38	
SLV 12	11	0.39	9.52	-17985	106608	543854	5.1	
SLV 13	11	0.39	10.9	-20583	106608	608253	5.71	
SLV 14	11	0.39	10.33	-19507	106608	582020	5.46	
SLV 15	11	0.39	11.16	-21089	106608	620388	5.82	
SLV 16	11	0.39	10.6	-20013	106608	594443	5.58	

Per la verifica seguente non si considerano i rinforzi predisposti.

Verifica dei meccanismi locali di collasso con analisi cinematica lineare
accelerazione limite = 196,01; forza di aggancio al piano = 30

combinazione	N top	N base	V orto	alfa0	M*	e*	a0*	
SLV 1	-3689	-20170	236	0.661	16.361	0.899	535	
SLV 2	-3633	-20745	235	0.664	16.318	0.899	537	
SLV 3	-3693	-24589	-217	0.663	16.364	0.899	536	
SLV 4	-3637	-25164	-217	0.666	16.321	0.899	538	
SLV 5	-3818	-13545	749	0.607	16.461	0.898	491	
SLV 6	-3755	-14185	749	0.61	16.412	0.898	494	
SLV 7	-3830	-28276	-759	0.606	16.471	0.898	490	
SLV 8	-3767	-28917	-759	0.609	16.422	0.898	492	
SLV 9	-3929	-12314	737	0.603	16.548	0.897	488	
SLV 10	-3866	-12955	737	0.606	16.499	0.898	491	
SLV 11	-3941	-27046	-771	0.599	16.558	0.897	485	
SLV 12	-3878	-27686	-771	0.602	16.509	0.897	488	
SLV 13	-4059	-16067	196	0.645	16.652	0.896	523	
SLV 14	-4003	-16642	195	0.648	16.607	0.897	525	

muratura

combinazione	N top	N base	V orto	alfa0	M*	e*	a0*	
SLV 15	-4063	-20486	-257	0.64	16.655	0.896	519	
SLV 16	-4007	-21061	-257	0.643	16.61	0.897	521	

Maschio 48
Dati geometrici

X ini.	Y ini.	X fin.	Y fin.	quota i.	quota.s	l	sp.	h netta	h ini.	h fin.	a
1110	1530	840	1530	L2	L3	270	70	460	560	560	

Materiale: Muratura in pietrame consolidata con iniezioni LC1
f medio 30
tau 0.9
E 24000
G 8053.69
Fattore di confidenza 1.35

Rinforzo con rete e betoncino su entrambe le facce
Betoncino: C25/30
spessore: 3
acciaio materiale: B450C
BARRE VERTICALI
diametro (mm) 5
passo 20
ancorate ad entrambe le estremità
BARRE ORIZZONTALI
diametro (mm) 5
passo 20
ancorate ad entrambe le estremità

Verifica a pressoflessione nel piano e taglio delle sezioni rinforzate 7.8.3.2 D.M. 14-01-08 (N.T.C.)

comb.	quota sezione	gamma m.	gamma s.	gamma c.	N	V	V orto	M	M orto	c.s.	d	fvd	Vt,c	Vt,M	Vt,S	
SLU 1	500	3	1.15	1.5	-28166	-462	247	-35204	-72021	9.66	270	0.32	42000	5969	12447	
SLU 1	1060	3	1.15	1.5	-6981	-474	-27	3542	3	38.99	270	0.25	42000	4638	12447	
SLU 2	500	3	1.15	1.5	-29066	-468	252	-32461	-73512	9.36	270	0.32	42000	6025	12447	
SLU 2	1060	3	1.15	1.5	-7966	-436	-28	2378	3	34.17	270	0.25	42000	4700	12447	
SLU 3	500	3	1.15	1.5	-27044	-443	322	-20566	-94220	10.06	270	0.31	42000	5898	12447	
SLU 3	1060	3	1.15	1.5	-9196	-413	-33	1525	4	29.6	270	0.25	42000	4778	12447	
SLU 4	500	3	1.15	1.5	-25279	-426	347	-18212	-101604	10.77	270	0.31	42000	5788	12447	
SLU 4	1060	3	1.15	1.5	-8739	-441	-34	2322	4	31.15	270	0.25	42000	4749	12447	
SLU 5	500	3	1.15	1.5	-25728	-429	349	-16840	-102350	10.58	270	0.31	42000	5816	12447	
SLU 5	1060	3	1.15	1.5	-9231	-422	-34	1740	4	29.49	270	0.25	42000	4780	12447	
SLU 6	500	3	1.15	1.5	-28759	-613	291	-41326	-84870	9.46	270	0.32	42000	6006	12447	
SLU 6	1060	3	1.15	1.5	-9185	-539	-31	3704	4	29.63	270	0.25	42000	4777	12447	
SLU 7	500	3	1.15	1.5	-29658	-618	296	-38582	-86361	9.18	270	0.32	42000	6063	12447	
SLU 7	1060	3	1.15	1.5	-10170	-501	-31	2541	4	26.76	270	0.26	42000	4839	12447	
SLU 8	500	3	1.15	1.5	-27637	-593	365	-26688	-107070	9.85	270	0.31	42000	5936	12447	
SLU 8	1060	3	1.15	1.5	-11401	-478	-36	1687	5	23.88	270	0.26	42000	4916	12447	
SLU 9	500	3	1.15	1.5	-25871	-576	390	-24334	-114453	10.52	270	0.31	42000	5825	12447	
SLU 9	1060	3	1.15	1.5	-10943	-506	-37	2485	5	24.87	270	0.26	42000	4887	12447	
SLU 10	500	3	1.15	1.5	-26321	-579	393	-22962	-115199	10.34	270	0.31	42000	5853	12447	
SLU 10	1060	3	1.15	1.5	-11436	-487	-38	1903	5	23.8	270	0.26	42000	4918	12447	
SLU 11	500	3	1.15	1.5	-36616	-601	322	-45766	-93627	7.43	270	0.34	42000	6500	12447	
SLU 11	1060	3	1.15	1.5	-9075	-617	-36	4604	4	29.99	270	0.25	42000	4770	12447	
SLU 12	500	3	1.15	1.5	-37516	-607	327	-43022	-95118	7.26	270	0.35	42000	6556	12447	
SLU 12	1060	3	1.15	1.5	-10060	-578	-36	3441	4	27.06	270	0.26	42000	4832	12447	
SLU 13	500	3	1.15	1.5	-35494	-581	396	-31127	-115826	7.67	270	0.34	42000	6429	12447	
SLU 13	1060	3	1.15	1.5	-11291	-555	-41	2587	5	24.11	270	0.26	42000	4909	12447	
SLU 14	500	3	1.15	1.5	-33728	-565	421	-28773	-123210	8.07	270	0.33	42000	6318	12447	
SLU 14	1060	3	1.15	1.5	-10833	-583	-42	3385	5	25.13	270	0.26	42000	4880	12447	
SLU 15	500	3	1.15	1.5	-34178	-568	424	-27401	-123956	7.96	270	0.34	42000	6346	12447	
SLU 15	1060	3	1.15	1.5	-11326	-564	-43	2803	5	24.03	270	0.26	42000	4911	12447	
SLU 16	500	3	1.15	1.5	-37209	-751	365	-51888	-106476	7.32	270	0.35	42000	6537	12447	
SLU 16	1060	3	1.15	1.5	-11280	-682	-39	4767	5	24.13	270	0.26	42000	4908	12447	
SLU 17	500	3	1.15	1.5	-38108	-757	370	-49144	-107967	7.14	270	0.35	42000	6593	12447	
SLU 17	1060	3	1.15	1.5	-12264	-643	-40	3604	5	22.19	270	0.26	42000	4970	12447	
SLU 18	500	3	1.15	1.5	-36087	-732	440	-37249	-128676	7.54	270	0.34	42000	6466	12447	
SLU 18	1060	3	1.15	1.5	-13495	-620	-44	2750	6	20.17	270	0.27	42000	5048	12447	
SLU 19	500	3	1.15	1.5	-34321	-715	464	-34895	-136060	7.93	270	0.34	42000	6355	12447	
SLU 19	1060	3	1.15	1.5	-13038	-648	-46	3547	6	20.88	270	0.27	42000	5019	12447	
SLU 20	500	3	1.15	1.5	-34771	-718	467	-33523	-136805	7.83	270	0.34	42000	6384	12447	
SLU 20	1060	3	1.15	1.5	-13530	-629	-46	2966	6	20.12	270	0.27	42000	5050	12447	

Verifica a pressoflessione nel piano e taglio delle sezioni rinforzate 7.8.3.2 D.M. 14-01-08 (N.T.C.)

comb.	quota sezione	gamma m.	gamma s.	gamma c.	N	V	V orto	M	M orto	c.s.	d	fvd	Vt,c	Vt,M	Vt,S	
SLV 1	500	2	1.15	1.5	-30602	10558	305	1594192	-147985	7.44	235	0.51	54833	8366	10833	
SLV 1	1060	2	1.15	1.5	-8842	9269	-299	-171655	-22	37.12	270	0.38	63000	7133	12447	
SLV 2	500	2	1.15	1.5	-30593	8141	305	1243574	-147937	8.46	245	0.5	57167	8599	11294	
SLV 2	1060	2	1.15	1.5	-8833	6564	-298	-126372	-22	37.15	270	0.38	63000	7132	12447	
SLV 3	500	2	1.15	1.5	-25641	10166	-741	1610816	-40068	7.82	225	0.49	52500	7665	10372	
SLV 3	1060	2	1.15	1.5	-8831	8003	194	-139292	-5	37.16	270	0.38	63000	7132	12447	
SLV 4	500	2	1.15	1.5	-25632	7749	-741	1260198	-40020	9.19	245	0.47	57167	8131	11294	
SLV 4	1060	2	1.15	1.5	-8822	5298	194	-94009	-5	37.2	270	0.38	63000	7131	12447	
SLV 5	500	2	1.15	1.5	-36298	4356	1886	570562	-268642	9.04	270	0.51	63000	9719	12447	
SLV 5	1060	2	1.15	1.5	-8834	5443	-858	-116619	-30	37.15	270	0.38	63000	7132	12447	
SLV 6	500	2	1.15	1.5	-36288	1664	1886	180100	-268588	9.04	270	0.51	63000	9718	12447	
SLV 6	1060	2	1.15	1.5	-8825	2431	-857	-66190	-30	37.19	270	0.38	63000	7131	12447	
SLV 7	500	2	1.15	1.5	-19760	3050	-1602	625975	91082	14.37	255	0.44	59500	7811	11755	
SLV 7	1060	2	1.15	1.5	-8798	1223	783	-8740	28	37.3	270	0.38	63000	7129	12447	
SLV 8	500	2	1.15	1.5	-19750	358	-1602	235513	91135	16.62	270	0.43	63000	8160	12447	
SLV 8	1060	2	1.15	1.5	-8788	-1788	783	41689	28	37.35	270	0.38	63000	7128	12447	

comb.	quota sezione	gamma m.	gamma s.	gamma c.	N	V	V orto	M	M orto	c.s.	d	fvd	Vt,c	Vt,M	Vt,S	
SLV 9	500	2	1.15	1.5	-36218	-1469	2194	-307288	-264142	9.06	270	0.51	63000	9712	12447	
SLV 9	1060	2	1.15	1.5	-8816	766	-845	-34876	-20	37.23	270	0.38	63000	7131	12447	
SLV 10	500	2	1.15	1.5	-36208	-4161	2194	-697749	-264089	9.06	270	0.51	63000	9711	12447	
SLV 10	1060	2	1.15	1.5	-8806	-2245	-844	15553	-20	37.27	270	0.38	63000	7130	12447	
SLV 11	500	2	1.15	1.5	-19680	-2775	-1293	-251874	95581	16.68	270	0.43	63000	8154	12447	
SLV 11	1060	2	1.15	1.5	-8780	-3454	796	73003	38	37.38	270	0.38	63000	7127	12447	
SLV 12	500	2	1.15	1.5	-19670	-5467	-1294	-642336	95635	16.07	275	0.43	64167	8270	12677	
SLV 12	1060	2	1.15	1.5	-8770	-6465	796	123432	38	37.42	270	0.38	63000	7126	12447	
SLV 13	500	2	1.15	1.5	-30336	-8860	1333	-1331972	-132987	9.37	265	0.49	61833	9041	12216	
SLV 13	1060	2	1.15	1.5	-8782	-6321	-256	100821	12	37.37	270	0.38	63000	7127	12447	
SLV 14	500	2	1.15	1.5	-30327	-11277	1333	-1682591	-132939	8.31	245	0.5	57167	8574	11294	
SLV 14	1060	2	1.15	1.5	-8773	-9025	-255	146104	12	37.28	270	0.38	63000	7126	12447	
SLV 15	500	2	1.15	1.5	-25374	-9251	287	-1315348	-25070	10.33	255	0.47	59500	8340	11755	
SLV 15	1060	2	1.15	1.5	-8771	-7587	236	133185	30	37.42	270	0.38	63000	7126	12447	
SLV 16	500	2	1.15	1.5	-25366	-11669	287	-1665966	-25022	8.88	235	0.48	54833	7873	10833	
SLV 16	1060	2	1.15	1.5	-8762	-10291	237	178468	30	36.12	0	0	0	0	0	

Verifica a pressoflessione fuori piano muratura rinforzata D.M. 14-01-08 (N.T.C.)
quota 730 Ta 0 Wa 0.15 denominatore 8

comb.	fd	fcd	fyd	N	Sa	M	x	c.s.	
SLV 1	11	141	3913	-17845	0.39	143921	270	19.51	
SLV 2	11	141	3913	-17836	0.39	143921	270	19.52	
SLV 3	11	141	3913	-14895	0.39	143921	270	22.52	
SLV 4	11	141	3913	-14887	0.39	143921	270	22.53	
SLV 5	11	141	3913	-21303	0.39	143921	270	16.37	
SLV 6	11	141	3913	-21293	0.39	143921	270	16.38	
SLV 7	11	141	3913	-11471	0.39	143921	270	27.43	
SLV 8	11	141	3913	-11461	0.39	143921	270	27.45	
SLV 9	11	141	3913	-21316	0.39	143921	270	16.36	
SLV 10	11	141	3913	-21307	0.39	143921	270	16.37	
SLV 11	11	141	3913	-11484	0.39	143921	270	27.41	
SLV 12	11	141	3913	-11475	0.39	143921	270	27.43	
SLV 13	11	141	3913	-17891	0.39	143921	270	19.47	
SLV 14	11	141	3913	-17882	0.39	143921	270	19.48	
SLV 15	11	141	3913	-14941	0.39	143921	270	22.47	
SLV 16	11	141	3913	-14933	0.39	143921	270	22.48	

Per la verifica seguente non si considerano i rinforzi predisposti.

Verifica dei meccanismi locali di collasso con analisi cinematica lineare
accelerazione limite = 196,01; forza di aggancio al piano = 30

combinazione	N top	N base	V orto	alfa0	M*	e*	a0*	
SLV 1	-8842	-30602	-299	0.539	25.347	0.889	441	
SLV 2	-8833	-30593	-298	0.54	25.339	0.889	441	
SLV 3	-8831	-25641	194	0.545	25.337	0.889	446	
SLV 4	-8822	-25632	194	0.546	25.329	0.889	446	
SLV 5	-8834	-36298	-858	0.509	25.34	0.889	416	
SLV 6	-8825	-36288	-857	0.51	25.331	0.889	416	
SLV 7	-8798	-19760	783	0.514	25.308	0.889	420	
SLV 8	-8788	-19750	783	0.514	25.299	0.889	420	
SLV 9	-8816	-36218	-845	0.51	25.324	0.889	417	
SLV 10	-8806	-36208	-844	0.511	25.315	0.889	417	
SLV 11	-8780	-19680	796	0.514	25.291	0.889	420	
SLV 12	-8770	-19670	796	0.514	25.283	0.889	420	
SLV 13	-8782	-30336	-256	0.543	25.293	0.889	444	
SLV 14	-8773	-30327	-255	0.544	25.285	0.889	444	
SLV 15	-8771	-25374	236	0.545	25.284	0.889	445	
SLV 16	-8762	-25366	237	0.545	25.276	0.889	445	

Maschio 49
Dati geometrici

X ini.	Y ini.	X fin.	Y fin.	quota i.	quota.s	l	sp.	h netta	h ini.	h fin.	a
1220	135	1650	135	L2	L3	430	70	460	560	560	

Materiale: Muratura in pietrame consolidata con iniezioni LC1
f medio 30
tau 0.9
E 24000
G 8053.69
Fattore di confidenza 1.35

Verifica a pressoflessione per azioni non sismiche 4.5.6.2 D.M. 14-01-08 (N.T.C.) gammaM 3

comb.	quota	N	M	p	es1	es2	ea	ev	e ver (cm)	Ft	Fl	Nu (daN)	
1	1060	-5712	-20190	1	0	1.82	2.3	0,00	4,12	0,75	0,97	163807	
1	730	-34587	-744355	1	0	1.82	2.3	0,00	2,30	0,83	0,84	156943	
1	500	-46139	-1042093	1	0	1.82	2.3	0,00	4,12	0,75	0,84	140567	
2	1060	-5934	-57345	1	0	1.99	2.3	0,00	4,29	0,75	0,93	154771	
2	730	-35061	-790908	1	0	1.99	2.3	0,00	2,30	0,83	0,84	155544	
2	500	-46572	-1036312	1	0	1.99	2.3	0,00	4,29	0,75	0,84	139569	
3	1060	-6242	-109571	1	0	2.21	2.3	0,00	4,51	0,74	0,87	143363	
3	730	-35684	-835024	1	0	2.21	2.3	0,00	2,30	0,83	0,83	154407	
3	500	-47069	-972773	1	0	2.21	2.3	0,00	4,51	0,74	0,85	139651	
4	1060	-6153	-94798	1	0	2.15	2.3	0,00	4,45	0,74	0,89	146443	
4	730	-35478	-807379	1	0	2.15	2.3	0,00	2,30	0,83	0,83	155275	
4	500	-46850	-951322	1	0	2.15	2.3	0,00	4,45	0,74	0,85	140583	
5	1060	-6264	-113375	1	0	2.23	2.3	0,00	4,53	0,74	0,87	142581	
5	730	-35715	-830655	1	0	2.23	2.3	0,00	2,30	0,83	0,83	154599	
5	500	-47066	-948432	1	0	2.23	2.3	0,00	4,53	0,74	0,85	140139	
6	1060	-6284	-118822	1	0	1.99	2.3	0,00	4,29	0,75	0,86	143591	
6	730	-35845	-868170	1	0	1.99	2.3	0,00	2,30	0,83	0,82	153301	
6	500	-47287	-1009398	1	0	1.99	2.3	0,00	4,29	0,75	0,85	140647	
7	1060	-6506	-155977	1	0	2.14	2.3	0,00	4,44	0,74	0,83	136258	

muratura

comb.	quota	N	M	p	es1	es2	ea	ev	e ver (cm)	Ft	Fl	Nu (daN)	
7	730	-36319	-914723	1	0	2.14	2.3	0,00	2,30	0,83	0,82	151998	
7	500	-47720	-1003617	1	0	2.14	2.3	0,00	4,44	0,74	0,85	139780	
8	1060	-6815	-208203	1	0	2.34	2.3	0,00	4,64	0,73	0,78	126900	
8	730	-36942	-958839	1	0	2.34	2.3	0,00	2,32	0,83	0,81	150814	
8	500	-48218	-940077	1	0	2.34	2.3	0,00	4,64	0,73	0,86	139980	
9	1060	-6725	-193430	1	0	2.28	2.3	0,00	4,58	0,73	0,79	129431	
9	730	-36736	-931193	1	0	2.28	2.3	0,00	2,30	0,83	0,82	151778	
9	500	-47998	-918627	1	0	2.28	2.3	0,00	4,58	0,73	0,86	140853	
10	1060	-6836	-212007	1	0	2.35	2.3	0,00	4,65	0,73	0,77	126252	
10	730	-36973	-954470	1	0	2.35	2.3	0,00	2,33	0,83	0,81	150948	
10	500	-48215	-915736	1	0	2.35	2.3	0,00	4,65	0,73	0,86	140462	
11	1060	-7426	-26247	1	0	1.82	2.3	0,00	4,12	0,75	0,97	163807	
11	730	-44964	-967662	1	0	1.82	2.3	0,00	2,30	0,83	0,84	156943	
11	500	-59980	-1354721	1	0	1.82	2.3	0,00	4,12	0,75	0,84	140567	
12	1060	-7648	-63402	1	0	1.95	2.3	0,00	4,25	0,75	0,94	156782	
12	730	-45437	-1014214	1	0	1.95	2.3	0,00	2,30	0,83	0,84	155863	
12	500	-60413	-1348940	1	0	1.95	2.3	0,00	4,25	0,75	0,84	139791	
13	1060	-7956	-115628	1	0	2.13	2.3	0,00	4,43	0,74	0,89	147701	
13	730	-46061	-1058331	1	0	2.13	2.3	0,00	2,30	0,83	0,83	154979	
13	500	-60911	-1285400	1	0	2.13	2.3	0,00	4,43	0,74	0,85	139830	
14	1060	-7866	-100855	1	0	2.08	2.3	0,00	4,38	0,74	0,91	150178	
14	730	-45854	-1030685	1	0	2.08	2.3	0,00	2,30	0,83	0,84	155653	
14	500	-60691	-1263950	1	0	2.08	2.3	0,00	4,38	0,74	0,85	140561	
15	1060	-7977	-119432	1	0	2.14	2.3	0,00	4,44	0,74	0,89	147070	
15	730	-46091	-1053961	1	0	2.14	2.3	0,00	2,30	0,83	0,83	155127	
15	500	-60908	-1261059	1	0	2.14	2.3	0,00	4,44	0,74	0,85	140207	
16	1060	-7998	-124879	1	0	1.96	2.3	0,00	4,26	0,75	0,89	147891	
16	730	-46221	-1091477	1	0	1.96	2.3	0,00	2,30	0,83	0,83	154119	
16	500	-61129	-1322026	1	0	1.96	2.3	0,00	4,26	0,75	0,84	140615	
17	1060	-8220	-162034	1	0	2.08	2.3	0,00	4,38	0,74	0,86	141924	
17	730	-46695	-1138029	1	0	2.08	2.3	0,00	2,30	0,83	0,82	153097	
17	500	-61562	-1316245	1	0	2.08	2.3	0,00	4,38	0,74	0,84	139920	
18	1060	-8528	-214260	1	0	2.23	2.3	0,00	4,53	0,74	0,82	134157	
18	730	-47318	-1182146	1	0	2.23	2.3	0,00	2,30	0,83	0,82	152272	
18	500	-62060	-1252705	1	0	2.23	2.3	0,00	4,53	0,74	0,85	140035	
19	1060	-8439	-199487	1	0	2.19	2.3	0,00	4,49	0,74	0,83	136277	
19	730	-47112	-1154500	1	0	2.19	2.3	0,00	2,30	0,83	0,82	152916	
19	500	-61840	-1231255	1	0	2.19	2.3	0,00	4,49	0,74	0,86	140728	
20	1060	-8549	-218065	1	0	2.24	2.3	0,00	4,54	0,74	0,81	133613	
20	730	-47349	-1177776	1	0	2.24	2.3	0,00	2,30	0,83	0,82	152418	
20	500	-62056	-1228364	1	0	2.24	2.3	0,00	4,54	0,74	0,86	140408	

Verifica a taglio con rottura per fessurazione diagonale per azioni non sismiche Circ.617 C8.7.1.5 gammaM 3

comb.	quota	Vd	N	ftd	b	sigma0	Vu	c.s.	
SLU 1	750	-782	-32230	0.33	1.07	1.07	19249	24.61	
SLU 1	600	-787	-41871	0.33	1.07	1.39	21332	27.11	
SLU 2	750	-511	-32702	0.33	1.07	1.09	19356	37.88	
SLU 2	600	-515	-42332	0.33	1.07	1.41	21427	41.57	
SLU 3	750	-20	-33320	0.33	1.07	1.11	19496	100	
SLU 3	600	-24	-42940	0.33	1.07	1.43	21551	100	
SLU 4	750	-81	-33113	0.33	1.07	1.1	19449	100	
SLU 4	600	-85	-42740	0.33	1.07	1.42	21510	100	
SLU 5	750	55	-33349	0.33	1.07	1.11	19502	100	
SLU 5	600	51	-42971	0.33	1.07	1.43	21557	100	
SLU 6	750	-16	-33485	0.33	1.07	1.11	19533	100	
SLU 6	600	-20	-43110	0.33	1.07	1.43	21585	100	
SLU 7	750	256	-33957	0.33	1.07	1.13	19639	76.81	
SLU 7	600	251	-43571	0.33	1.07	1.45	21679	86.28	
SLU 8	750	747	-34575	0.33	1.07	1.15	19776	26.48	
SLU 8	600	742	-44180	0.33	1.07	1.47	21801	29.36	
SLU 9	750	686	-34368	0.33	1.07	1.14	19730	28.76	
SLU 9	600	682	-43980	0.33	1.07	1.46	21761	31.93	
SLU 10	750	822	-34604	0.33	1.07	1.15	19783	24.08	
SLU 10	600	817	-44210	0.33	1.07	1.47	21808	26.68	
SLU 11	750	-1017	-41899	0.33	1.07	1.39	21338	20.98	
SLU 11	600	-1023	-54432	0.33	1.07	1.81	23774	23.24	
SLU 12	750	-746	-42371	0.33	1.07	1.41	21435	28.75	
SLU 12	600	-751	-54893	0.33	1.07	1.82	23859	31.75	
SLU 13	750	-255	-42989	0.33	1.07	1.43	21561	84.7	
SLU 13	600	-260	-55502	0.33	1.07	1.84	23970	92.11	
SLU 14	750	-315	-42782	0.33	1.07	1.42	21519	68.23	
SLU 14	600	-321	-55302	0.33	1.07	1.84	23933	74.54	
SLU 15	750	-180	-43018	0.33	1.07	1.43	21567	100	
SLU 15	600	-185	-55532	0.33	1.07	1.84	23976	100	
SLU 16	750	-250	-43154	0.33	1.07	1.43	21594	86.26	
SLU 16	600	-256	-55671	0.33	1.07	1.85	24001	93.71	
SLU 17	750	21	-43626	0.33	1.07	1.45	21690	100	
SLU 17	600	15	-56132	0.33	1.07	1.86	24085	100	
SLU 18	750	512	-44244	0.33	1.07	1.47	21814	42.6	
SLU 18	600	506	-56741	0.33	1.07	1.89	24196	47.78	
SLU 19	750	451	-44037	0.33	1.07	1.46	21773	48.25	
SLU 19	600	446	-56541	0.33	1.07	1.88	24159	54.22	
SLU 20	750	587	-44273	0.33	1.07	1.47	21820	37.18	
SLU 20	600	581	-56771	0.33	1.07	1.89	24201	41.63	

Verifica a pressoflessione nel piano (7.8.2.2) e taglio con rottura per fessurazione diagonale (C8.7.1.5), gammaM = 2

comb.	quota	N	V par	V orto	M	M orto	N/(l*sp)	N/(l'*sp)	Mu	l'	fvd	Vt scorr.	Vt fess.diag.	
SLV 1	500	-37287	-4679	-490	-750924	48743	1.24	1.24	6965153	430	0.58	17491	26235	
SLV 1	1060	-6209	180	235	-109272	20	0.21	0.21	1305733	430	0.37	11275	16720	
SLV 2	500	-34589	-6027	-511	-748874	53086	1.15	1.15	6531863	430	0.56	16951	25550	
SLV 2	1060	-6114	-593	236	-84195	19	0.2	0.2	1286293	430	0.37	11256	16683	
SLV 3	500	-42367	-4170	1242	-1317173	-42064	1.41	1.41	7751368	430	0.61	18507	27479	
SLV 3	1060	-6160	517	-77	-108005	22	0.2	0.2	1295696	430	0.37	11265	16701	
SLV 4	500	-39670	-5517	1221	-1315123	-37721	1.32	1.32	7338805	430	0.6	17967	26826	
SLV 4	1060	-6065	-257	-76	-82928	21	0.2	0.2	1276249	430	0.37	11246	16664	
SLV 5	500	-37511	-705	-2595	-68800	107709	1.25	1.25	7000666	430	0.58	17536	26291	
SLV 5	1060	-6302	-1547	537	-115512	14	0.21	0.21	1324945	430	0.38	11294	16757	
SLV 6	500	-34507	-2206	-2619	-66516	112546	1.15	1.15	6518461	430	0.56	16935	25529	

comb.	quota	N	V par	V orto	M	M orto	N/(l*sp)	N/(l'*sp)	Mu	l'	fvd	Vt scorr.	Vt fess.diag.	
SLV 6	1060	-6197	-2408	538	-87585	13	0.21	0.21	1303309	430	0.37	11273	16716	
SLV 7	500	-54445	993	3177	-1956297	-194981	1.81	1.81	9463822	430	0.7	20922	30231	
SLV 7	1060	-6140	-426	-502	-111288	20	0.2	0.2	1291495	430	0.37	11261	16693	
SLV 8	500	-51441	-507	3153	-1954013	-190144	1.71	1.71	9058558	430	0.68	20322	29571	
SLV 8	1060	-6034	-1287	-501	-83361	19	0.2	0.2	1269834	430	0.37	11240	16652	
SLV 9	500	-42652	3146	-2670	-50271	67656	1.42	1.42	7794307	430	0.62	18564	27547	
SLV 9	1060	-6329	-2730	484	-118372	10	0.21	0.21	1330431	430	0.38	11299	16768	
SLV 10	500	-39648	1645	-2694	-47988	72492	1.32	1.32	7335460	430	0.6	17963	26820	
SLV 10	1060	-6224	-3591	485	-90445	9	0.21	0.21	1308800	430	0.37	11278	16726	
SLV 11	500	-59586	4844	3103	-1937768	-235034	1.98	1.98	10125775	430	0.73	21951	31330	
SLV 11	1060	-6166	-1608	-555	-114148	17	0.2	0.2	1296987	430	0.37	11267	16704	
SLV 12	500	-56582	3343	3079	-1935484	-230198	1.88	1.88	9743869	430	0.71	21350	30693	
SLV 12	1060	-6061	-2469	-554	-86221	15	0.2	0.2	1275330	430	0.37	11246	16662	
SLV 13	500	-54424	8156	-737	-689162	-84768	1.81	1.81	9460959	430	0.69	20918	30227	
SLV 13	1060	-6298	-3760	59	-118805	8	0.21	0.21	1324028	430	0.38	11293	16755	
SLV 14	500	-51726	6808	-758	-687111	-80425	1.72	1.72	9097586	430	0.68	20379	29634	
SLV 14	1060	-6203	-4533	60	-93728	7	0.21	0.21	1304601	430	0.37	11274	16718	
SLV 15	500	-59504	8665	995	-1255410	-175575	1.98	1.98	10115486	430	0.73	21934	31312	
SLV 15	1060	-6249	-3424	-253	-117538	10	0.21	0.21	1313997	430	0.37	11283	16736	
SLV 16	500	-56807	7318	973	-1253360	-171232	1.89	1.89	9772840	430	0.71	21395	30741	
SLV 16	1060	-6154	-4197	-252	-92461	9	0.2	0.2	1294563	430	0.37	11264	16699	

Verifica a pressoflessione fuori piano D.M. 14-01-08 (N.T.C.)
quota 730 Ta 0 Wa 0.15 denominatore 8

comb.	fd	Sa	x	N	M	Mc	c.s.	
SLV 1	11	0.39	8.05	-32704	229207	1012952	4.42	
SLV 2	11	0.39	7.61	-30898	229207	963897	4.21	
SLV 3	11	0.39	8.26	-33555	229207	1035803	4.52	
SLV 4	11	0.39	7.82	-31750	229207	987126	4.31	
SLV 5	11	0.39	8.42	-34177	229207	1052394	4.59	
SLV 6	11	0.39	7.92	-32167	229207	998443	4.36	
SLV 7	11	0.39	9.11	-37015	229207	1126839	4.92	
SLV 8	11	0.39	8.62	-35004	229207	1074293	4.69	
SLV 9	11	0.39	8.91	-36204	229207	1105760	4.82	
SLV 10	11	0.39	8.42	-34193	229207	1052812	4.59	
SLV 11	11	0.39	9.61	-39041	229207	1178789	5.14	
SLV 12	11	0.39	9.12	-37031	229207	1127246	4.92	
SLV 13	11	0.39	9.72	-39459	229207	1189357	5.19	
SLV 14	11	0.39	9.27	-37653	229207	1143305	4.99	
SLV 15	11	0.39	9.93	-40310	229207	1210792	5.28	
SLV 16	11	0.39	9.48	-38504	229207	1165118	5.08	

Verifica dei meccanismi locali di collasso con analisi cinematica lineare
accelerazione limite = 196,01; forza di aggancio al piano = 30

combinazione	N top	N base	V orto	alfa0	M*	e*	a0*	
SLV 1	-6209	-37287	235	0.721	33.894	0.907	578	
SLV 2	-6114	-34589	236	0.724	33.827	0.907	580	
SLV 3	-6160	-42367	-77	0.73	33.859	0.907	585	
SLV 4	-6065	-39670	-76	0.733	33.792	0.908	587	
SLV 5	-6302	-37511	537	0.704	33.96	0.906	565	
SLV 6	-6197	-34507	538	0.707	33.885	0.907	567	
SLV 7	-6140	-54445	-502	0.71	33.845	0.907	569	
SLV 8	-6034	-51441	-501	0.714	33.771	0.908	571	
SLV 9	-6329	-42652	484	0.706	33.979	0.906	566	
SLV 10	-6224	-39648	485	0.709	33.904	0.907	568	
SLV 11	-6166	-59586	-555	0.707	33.864	0.907	567	
SLV 12	-6061	-56582	-554	0.71	33.789	0.908	569	
SLV 13	-6298	-54424	59	0.726	33.957	0.906	582	
SLV 14	-6203	-51726	60	0.729	33.89	0.907	584	
SLV 15	-6249	-59504	-253	0.719	33.922	0.906	576	
SLV 16	-6154	-56807	-252	0.722	33.855	0.907	578	

Maschio 50
Dati geometrici

X ini.	Y ini.	X fin.	Y fin.	quota i.	quota.s	l	sp.	h netta	h ini.	h fin.	a
1855	610	1020	610	L2	L3	835	45	460	560	560	

Materiale: Muratura in pietrame consolidata con iniezioni LC1
f medio 30
tau 0.9
E 24000
G 8053.69
Fattore di confidenza 1.35

Rinforzo con rete e betoncino su entrambe le facce
Betoncino: C25/30
spessore: 3
acciaio materiale: B450C
BARRE VERTICALI
diametro (mm) 5
passo 20
ancorate ad entrambe le estremità
BARRE ORIZZONTALI
diametro (mm) 5
passo 20
ancorate ad entrambe le estremità

Verifica a pressoflessione nel piano e taglio delle sezioni rinforzate 7.8.3.2 D.M. 14-01-08 (N.T.C.)

comb.	quota sezione	gamma m.	gamma s.	gamma c.	N	V	V orto	M	M orto	c.s.	d	fvd	Vt,c	Vt,M	Vt,S	
SLU 1	500	3	1.15	1.5	-73755	131	14	2232920	-385	9.67	835	0.32	83500	11930	38493	

muratura

comb.	quota sezione	gamma m.	gamma s.	gamma c.	N	V	V orto	M	M orto	c.s.	d	fvd	Vt,c	Vt,M	Vt,S
SLU 1	1060	3	1.15	1.5	-12057	8334	-5	2701248	-103	30.74	677.5	0.24	67750	7360	31232
SLU 2	500	3	1.15	1.5	-76406	-142	14	2405689	-397	9.33	835	0.32	83500	12059	38493
SLU 2	1060	3	1.15	1.5	-13653	8583	-5	3081416	-109	26.97	667.5	0.24	66750	7338	30771
SLU 3	500	3	1.15	1.5	-81915	-244	15	2673035	-417	8.7	835	0.33	83500	12326	38493
SLU 3	1060	3	1.15	1.5	-15923	9216	-6	3609514	-115	23.03	667.5	0.25	66750	7448	30771
SLU 4	500	3	1.15	1.5	-81624	-16	15	2614842	-414	8.73	835	0.33	83500	12312	38493
SLU 4	1060	3	1.15	1.5	-15299	9238	-6	3455674	-112	24.05	667.5	0.25	66750	7418	30771
SLU 5	500	3	1.15	1.5	-82950	-152	15	2701227	-420	8.59	835	0.33	83500	12376	38493
SLU 5	1060	3	1.15	1.5	-16097	9362	-6	3645758	-115	22.8	667.5	0.25	66750	7456	30771
SLU 6	500	3	1.15	1.5	-80137	791	15	2489947	-405	8.9	835	0.33	83500	12240	38493
SLU 6	1060	3	1.15	1.5	-14533	9837	-6	3237356	-112	25.64	677.5	0.25	67750	7480	31232
SLU 7	500	3	1.15	1.5	-82789	518	15	2662717	-417	8.61	835	0.33	83500	12368	38493
SLU 7	1060	3	1.15	1.5	-16129	10086	-6	3617524	-117	22.96	677.5	0.25	67750	7558	31232
SLU 8	500	3	1.15	1.5	-88297	416	16	2930063	-438	8.07	835	0.34	83500	12636	38493
SLU 8	1060	3	1.15	1.5	-18399	10719	-6	4145622	-123	20.04	667.5	0.25	66750	7568	30771
SLU 9	500	3	1.15	1.5	-88006	644	16	2871870	-434	8.1	835	0.34	83500	12622	38493
SLU 9	1060	3	1.15	1.5	-17775	10741	-6	3991782	-121	20.81	667.5	0.25	66750	7538	30771
SLU 10	500	3	1.15	1.5	-89332	508	16	2958255	-440	7.98	835	0.34	83500	12686	38493
SLU 10	1060	3	1.15	1.5	-18573	10865	-6	4181866	-123	19.87	667.5	0.25	66750	7576	30771
SLU 11	500	3	1.15	1.5	-95882	170	18	2902796	-500	7.44	835	0.35	83500	13004	38493
SLU 11	1060	3	1.15	1.5	-15674	10834	-7	3511623	-134	23.65	677.5	0.25	67750	7536	31232
SLU 12	500	3	1.15	1.5	-98533	-102	18	3075565	-512	7.24	835	0.35	83500	13132	38493
SLU 12	1060	3	1.15	1.5	-17271	11084	-7	3891791	-140	21.35	667.5	0.25	66750	7513	30771
SLU 13	500	3	1.15	1.5	-104041	-205	19	3342911	-533	6.85	835	0.36	83500	13400	38493
SLU 13	1060	3	1.15	1.5	-19540	11716	-7	4419889	-146	18.81	667.5	0.25	66750	7623	30771
SLU 14	500	3	1.15	1.5	-103751	24	19	3284718	-529	6.87	835	0.36	83500	13386	38493
SLU 14	1060	3	1.15	1.5	-18916	11738	-7	4266049	-143	19.48	667.5	0.25	66750	7593	30771
SLU 15	500	3	1.15	1.5	-105076	-113	19	3371103	-535	6.78	835	0.36	83500	13450	38493
SLU 15	1060	3	1.15	1.5	-19714	11863	-7	4456133	-146	18.65	667.5	0.25	66750	7632	30771
SLU 16	500	3	1.15	1.5	-102264	830	19	3159823	-520	6.97	835	0.35	83500	13314	38493
SLU 16	1060	3	1.15	1.5	-18150	12337	-7	4047731	-143	20.51	677.5	0.25	67750	7656	31232
SLU 17	500	3	1.15	1.5	-104915	558	19	3332593	-533	6.79	835	0.36	83500	13442	38493
SLU 17	1060	3	1.15	1.5	-19747	12587	-7	4427898	-148	18.76	677.5	0.25	67750	7733	31232
SLU 18	500	3	1.15	1.5	-110423	455	20	3599939	-553	6.46	835	0.36	83500	13710	38493
SLU 18	1060	3	1.15	1.5	-22016	13219	-8	4955997	-154	16.76	667.5	0.26	66750	7744	30771
SLU 19	500	3	1.15	1.5	-110133	684	20	3541746	-549	6.47	835	0.36	83500	13695	38493
SLU 19	1060	3	1.15	1.5	-21392	13241	-8	4802157	-151	17.3	667.5	0.26	66750	7713	30771
SLU 20	500	3	1.15	1.5	-111459	547	20	3628131	-556	6.4	835	0.37	83500	13760	38493
SLU 20	1060	3	1.15	1.5	-22190	13366	-8	4992241	-154	16.64	667.5	0.26	66750	7752	30771

Verifica a pressoflessione nel piano e taglio delle sezioni rinforzate 7.8.3.2 D.M. 14-01-08 (N.T.C.)

comb.	quota sezione	gamma m.	gamma s.	gamma c.	N	V	V orto	M	M orto	c.s.	d	fvd	Vt,c	Vt,M	Vt,S
SLV 1	500	2	1.15	1.5	-84567	30642	183	4856842	-19437	9.37	835	0.5	125250	18682	38493
SLV 1	1060	2	1.15	1.5	-13973	24990	-43	2754414	-97	34.72	697.5	0.37	104625	11480	32154
SLV 2	500	2	1.15	1.5	-86238	33272	184	4802245	-19421	9.24	835	0.5	125250	18804	38493
SLV 2	1060	2	1.15	1.5	-14012	27585	-41	2693236	-66	35.29	697.5	0.37	104625	11483	32154
SLV 3	500	2	1.15	1.5	-79613	29371	-475	4914530	54880	9.83	827.5	0.49	124125	18209	38147
SLV 3	1060	2	1.15	1.5	-13773	22571	220	2807445	-175	34.3	687.5	0.37	103125	11315	31693
SLV 4	500	2	1.15	1.5	-81284	32001	-475	4859933	54895	9.68	0	0	0	0	0
SLV 4	1060	2	1.15	1.5	-13812	25166	221	2746267	-144	34.89	687.5	0.37	103125	11318	31693
SLV 5	500	2	1.15	1.5	-87913	10429	1064	3128230	-118833	9.38	835	0.5	125250	18925	38493
SLV 5	1060	2	1.15	1.5	-14528	16771	-416	3017459	-2	32.02	687.5	0.37	103125	11370	31693
SLV 6	500	2	1.15	1.5	-89774	13359	1065	3067428	-118816	9.18	835	0.51	125250	19061	38493
SLV 6	1060	2	1.15	1.5	-14572	19661	-414	2949329	33	32.61	687.5	0.37	103125	11373	31693
SLV 7	500	2	1.15	1.5	-71399	6192	-1132	3320523	128888	11.46	835	0.47	125250	17723	38493
SLV 7	1060	2	1.15	1.5	-13862	8709	460	3194229	-260	30.59	667.5	0.37	100125	11022	30771
SLV 8	500	2	1.15	1.5	-73260	9122	-1131	3259721	128905	11.23	835	0.48	125250	17859	38493
SLV 8	1060	2	1.15	1.5	-13906	11599	462	3126099	-225	31.21	667.5	0.37	100125	11025	30771
SLV 9	500	2	1.15	1.5	-85907	-8039	1160	1701591	-129713	9.59	835	0.5	125250	18779	38493
SLV 9	1060	2	1.15	1.5	-14806	7434	-473	3292978	4	29.61	667.5	0.37	100125	11090	30771
SLV 10	500	2	1.15	1.5	-87768	-5109	1161	1640789	-129696	9.39	835	0.5	125250	18915	38493
SLV 10	1060	2	1.15	1.5	-14850	10324	-471	3224848	39	30.16	677.5	0.37	101625	11244	31232
SLV 11	500	2	1.15	1.5	-69394	-12276	-1035	1893884	118009	11.88	835	0.47	125250	17577	38493
SLV 11	1060	2	1.15	1.5	-14141	-628	403	3469748	-254	28.15	657.5	0.37	98625	10892	30310
SLV 12	500	2	1.15	1.5	-71255	-9346	-1035	1833082	118025	11.57	835	0.47	125250	17713	38493
SLV 12	1060	2	1.15	1.5	-14184	2262	405	3401618	-219	28.74	657.5	0.37	98625	10895	30310
SLV 13	500	2	1.15	1.5	-77883	-30918	504	101379	-55703	10.58	835	0.48	125250	18195	38493
SLV 13	1060	2	1.15	1.5	-14900	-6133	-232	3672810	-78	26.59	657.5	0.37	98625	10947	30310
SLV 14	500	2	1.15	1.5	-79554	-28287	505	46782	-55688	10.36	835	0.49	125250	18317	38493
SLV 14	1060	2	1.15	1.5	-14939	-3538	-231	3611632	-46	27.06	657.5	0.37	98625	10950	30310
SLV 15	500	2	1.15	1.5	-72929	-32189	-155	159067	18614	11.3	835	0.47	125250	17835	38493
SLV 15	1060	2	1.15	1.5	-14700	-8552	30	3725841	-155	26.15	647.5	0.37	97125	10783	29849
SLV 16	500	2	1.15	1.5	-74600	-29559	-154	104470	18629	11.05	835	0.48	125250	17956	38493
SLV 16	1060	2	1.15	1.5	-14739	-5957	32	3664663	-124	26.63	647.5	0.37	97125	10786	29849

Verifica a pressoflessione fuori piano muratura rinforzata D.M. 14-01-08 (N.T.C.)
quota 730 Ta 0 Wa 0.1 denominatore 8

comb.	fd	fcd	fyd	N	Sa	M	x	c.s.
SLV 1	11	141	3913	-49047	0.39	286128	835	18.34
SLV 2	11	141	3913	-49700	0.39	286128	835	18.15
SLV 3	11	141	3913	-45592	0.39	286128	835	19.43
SLV 4	11	141	3913	-46245	0.39	286128	835	19.21
SLV 5	11	141	3913	-57609	0.39	286128	835	15.89
SLV 6	11	141	3913	-58336	0.39	286128	835	15.69
SLV 7	11	141	3913	-46091	0.39	286128	835	19.26
SLV 8	11	141	3913	-46818	0.39	286128	835	19.03
SLV 9	11	141	3913	-61525	0.39	286128	835	14.88
SLV 10	11	141	3913	-62252	0.39	286128	835	14.71
SLV 11	11	141	3913	-50007	0.39	286128	835	18.06
SLV 12	11	141	3913	-50734	0.39	286128	835	17.85
SLV 13	11	141	3913	-62098	0.39	286128	835	14.74
SLV 14	11	141	3913	-62751	0.39	286128	835	14.59
SLV 15	11	141	3913	-58643	0.39	286128	835	15.61
SLV 16	11	141	3913	-59296	0.39	286128	835	15.44

Per la verifica seguente non si considerano i rinforzi predisposti.

Verifica dei meccanismi locali di collasso con analisi cinematica lineare
accelerazione limite = 196,01; forza di aggancio al piano = 30

combinazione	N top	N base	V orto	alfa0	M*	e*	a0*	
SLV 1	-13973	-84567	-43	0.835	47.239	0.891	681	
SLV 2	-14012	-86238	-41	0.834	47.272	0.891	680	
SLV 3	-13773	-79613	220	0.835	47.069	0.891	680	
SLV 4	-13812	-81284	221	0.834	47.102	0.891	680	
SLV 5	-14528	-87913	-416	0.811	47.714	0.891	662	
SLV 6	-14572	-89774	-414	0.81	47.752	0.891	661	
SLV 7	-13862	-71399	460	0.825	47.145	0.891	673	
SLV 8	-13906	-73260	462	0.824	47.182	0.891	672	
SLV 9	-14806	-85907	-473	0.803	47.954	0.89	655	
SLV 10	-14850	-87768	-471	0.802	47.992	0.89	655	
SLV 11	-14141	-69394	403	0.82	47.382	0.891	669	
SLV 12	-14184	-71255	405	0.819	47.419	0.891	668	
SLV 13	-14900	-77883	-232	0.808	48.035	0.89	660	
SLV 14	-14939	-79554	-231	0.807	48.069	0.89	659	
SLV 15	-14700	-72929	30	0.819	47.863	0.891	668	
SLV 16	-14739	-74600	32	0.818	47.896	0.89	667	

Maschio 51
Dati geometrici

X ini.	Y ini.	X fin.	Y fin.	quota i.	quota.s	l	sp.	h netta	h ini.	h fin.	a
1640	1530	1210	1530	L2	L3	430	70	460	560	560	

Materiale: Muratura in pietrame consolidata con iniezioni LC1
f medio 30
tau 0.9
E 24000
G 8053.69
Fattore di confidenza 1.35

Verifica a pressoflessione per azioni non sismiche 4.5.6.2 D.M. 14-01-08 (N.T.C.) gammaM 3

comb.	quota	N	M	p	es1	es2	ea	ev	e ver (cm)	Ft	Fl	Nu (daN)	
1	1060	-6789	294729	1	0	3.61	2.3	0,00	5,91	0,68	0,71	106807	
1	730	-39369	1271561	1	0	3.61	2.3	0,00	2,96	0,81	0,77	137457	
1	500	-55604	1034394	1	0	3.61	2.3	0,00	5,91	0,68	0,87	130443	
2	1060	-7194	360783	1	0	3.88	2.3	0,00	6,18	0,67	0,68	101464	
2	730	-40177	1358962	1	0	3.88	2.3	0,00	3,09	0,80	0,75	134499	
2	500	-56359	1050539	1	0	3.88	2.3	0,00	6,18	0,67	0,86	129017	
3	1060	-7838	473339	1	0	4.16	2.3	0,00	6,46	0,66	0,64	93980	
3	730	-42876	1546037	1	0	4.16	2.3	0,00	3,23	0,79	0,74	130720	
3	500	-58724	844067	1	0	4.16	2.3	0,00	6,46	0,66	0,90	132106	
4	1060	-7709	455523	1	0	4.05	2.3	0,00	6,35	0,66	0,64	95194	
4	730	-43225	1538811	1	0	4.05	2.3	0,00	3,18	0,80	0,74	131439	
4	500	-58982	739434	1	0	4.05	2.3	0,00	6,35	0,66	0,91	134651	
5	1060	-7912	488550	1	0	4.16	2.3	0,00	6,46	0,66	0,63	93126	
5	730	-43629	1582511	1	0	4.16	2.3	0,00	3,23	0,79	0,74	130549	
5	500	-59360	747506	1	0	4.16	2.3	0,00	6,46	0,66	0,91	133991	
6	1060	-7718	452097	1	0	3.83	2.3	0,00	6,13	0,67	0,64	96382	
6	730	-42094	1515399	1	0	3.83	2.3	0,00	3,07	0,80	0,74	131944	
6	500	-58032	936238	1	0	3.83	2.3	0,00	6,13	0,67	0,88	131980	
7	1060	-8123	518152	1	0	4.05	2.3	0,00	6,35	0,66	0,62	92277	
7	730	-42902	1602800	1	0	4.05	2.3	0,00	3,18	0,80	0,73	130132	
7	500	-58786	952383	1	0	4.05	2.3	0,00	6,35	0,66	0,88	130713	
8	1060	-8766	630707	1	0	4.29	2.3	0,00	6,59	0,66	0,59	86368	
8	730	-45601	1789875	1	0	4.29	2.3	0,00	3,29	0,79	0,73	127884	
8	500	-61151	745911	1	0	4.29	2.3	0,00	6,59	0,66	0,91	133695	
9	1060	-8638	612891	1	0	4.2	2.3	0,00	6,50	0,66	0,59	87306	
9	730	-45950	1782649	1	0	4.2	2.3	0,00	3,25	0,79	0,73	128546	
9	500	-61410	641278	1	0	4.2	2.3	0,00	6,50	0,66	0,92	136078	
10	1060	-8840	645918	1	0	4.29	2.3	0,00	6,59	0,66	0,58	85672	
10	730	-46354	1826349	1	0	4.29	2.3	0,00	3,30	0,79	0,73	127767	
10	500	-61787	649350	1	0	4.29	2.3	0,00	6,59	0,66	0,92	135480	
11	1060	-8826	383147	1	0	3.61	2.3	0,00	5,91	0,68	0,71	106807	
11	730	-51179	1653029	1	0	3.61	2.3	0,00	2,96	0,81	0,77	137457	
11	500	-72285	1344713	1	0	3.61	2.3	0,00	5,91	0,68	0,87	130443	
12	1060	-9231	449202	1	0	3.82	2.3	0,00	6,12	0,67	0,69	102635	
12	730	-51987	1740430	1	0	3.82	2.3	0,00	3,06	0,80	0,76	135162	
12	500	-73040	1360858	1	0	3.82	2.3	0,00	6,12	0,67	0,86	129332	
13	1060	-9875	561757	1	0	4.04	2.3	0,00	6,34	0,66	0,65	96587	
13	730	-54687	1927505	1	0	4.04	2.3	0,00	3,17	0,80	0,74	132048	
13	500	-75405	1154385	1	0	4.04	2.3	0,00	6,34	0,66	0,89	131711	
14	1060	-9746	543941	1	0	3.96	2.3	0,00	6,26	0,67	0,66	97592	
14	730	-55036	1920279	1	0	3.96	2.3	0,00	3,13	0,80	0,75	132812	
14	500	-75663	1049752	1	0	3.96	2.3	0,00	6,26	0,67	0,90	133716	
15	1060	-9949	576968	1	0	4.05	2.3	0,00	6,35	0,66	0,65	95885	
15	730	-55440	1963979	1	0	4.05	2.3	0,00	3,17	0,80	0,74	131804	
15	500	-76041	1057825	1	0	4.05	2.3	0,00	6,35	0,66	0,90	133194	
16	1060	-9755	540516	1	0	3.79	2.3	0,00	6,09	0,67	0,66	98545	
16	730	-53905	1896868	1	0	3.79	2.3	0,00	3,04	0,80	0,74	133068	
16	500	-74713	1246556	1	0	3.79	2.3	0,00	6,09	0,67	0,88	131624	
17	1060	-10159	606570	1	0	3.96	2.3	0,00	6,26	0,67	0,64	95153	
17	730	-54712	1984268	1	0	3.96	2.3	0,00	3,13	0,80	0,74	131261	
17	500	-75468	1262702	1	0	3.96	2.3	0,00	6,26	0,67	0,88	130613	
18	1060	-10803	719126	1	0	4.16	2.3	0,00	6,46	0,66	0,61	90146	
18	730	-57412	2171343	1	0	4.16	2.3	0,00	3,23	0,79	0,73	129396	
18	500	-77832	1056229	1	0	4.16	2.3	0,00	6,46	0,66	0,90	132935	
19	1060	-10675	701310	1	0	4.09	2.3	0,00	6,39	0,66	0,61	90964	
19	730	-57761	2164117	1	0	4.09	2.3	0,00	3,19	0,79	0,73	129928	
19	500	-78091	951596	1	0	4.09	2.3	0,00	6,39	0,66	0,91	134836	
20	1060	-10877	734337	1	0	4.16	2.3	0,00	6,46	0,66	0,61	89552	
20	730	-58165	2207818	1	0	4.16	2.3	0,00	3,23	0,79	0,73	129284	
20	500	-78468	959669	1	0	4.16	2.3	0,00	6,46	0,66	0,91	134354	

Verifica a taglio con rottura per fessurazione diagonale per azioni non sismiche Circ.617 C8.7.1.5 gammaM 3

comb.	quota	Vd	N	ftd	b	sigma0	Vu	c.s.	
SLU 1	750	-1361	-37046	0.33	1.07	1.23	20316	14.93	
SLU 1	600	-1354	-46966	0.33	1.07	1.56	22355	16.5	
SLU 2	750	-1704	-37859	0.33	1.07	1.26	20491	12.03	
SLU 2	600	-1698	-47788	0.33	1.07	1.59	22515	13.26	
SLU 3	750	-3391	-40568	0.33	1.07	1.35	21063	6.21	
SLU 3	600	-3385	-50492	0.33	1.07	1.68	23036	6.81	
SLU 4	750	-3772	-40916	0.33	1.07	1.36	21135	5.6	
SLU 4	600	-3765	-50829	0.33	1.07	1.69	23100	6.14	
SLU 5	750	-3943	-41323	0.33	1.07	1.37	21219	5.38	
SLU 5	600	-3936	-51240	0.33	1.07	1.7	23178	5.89	
SLU 6	750	-2899	-39781	0.33	1.07	1.32	20898	7.21	
SLU 6	600	-2893	-49701	0.33	1.07	1.65	22885	7.91	
SLU 7	750	-3242	-40594	0.33	1.07	1.35	21068	6.5	
SLU 7	600	-3236	-50523	0.33	1.07	1.68	23042	7.12	
SLU 8	750	-4930	-43303	0.33	1.07	1.44	21625	4.39	
SLU 8	600	-4923	-53227	0.33	1.07	1.77	23550	4.78	
SLU 9	750	-5310	-43652	0.33	1.07	1.45	21695	4.09	
SLU 9	600	-5303	-53564	0.33	1.07	1.78	23613	4.45	
SLU 10	750	-5482	-44058	0.33	1.07	1.46	21777	3.97	
SLU 10	600	-5475	-53975	0.33	1.07	1.79	23689	4.33	
SLU 11	750	-1769	-48160	0.33	1.07	1.6	22587	12.77	
SLU 11	600	-1761	-61056	0.33	1.07	2.03	24965	14.18	
SLU 12	750	-2112	-48972	0.33	1.07	1.63	22745	10.77	
SLU 12	600	-2104	-61878	0.33	1.07	2.06	25109	11.93	
SLU 13	750	-3800	-51682	0.33	1.07	1.72	23261	6.12	
SLU 13	600	-3791	-64582	0.33	1.07	2.15	25577	6.75	
SLU 14	750	-4180	-52030	0.33	1.07	1.73	23327	5.58	
SLU 14	600	-4171	-64919	0.33	1.07	2.16	25635	6.15	
SLU 15	750	-4351	-52436	0.33	1.07	1.74	23403	5.38	
SLU 15	600	-4343	-65330	0.33	1.07	2.17	25705	5.92	
SLU 16	750	-3308	-50895	0.33	1.07	1.69	23112	6.99	
SLU 16	600	-3299	-63791	0.33	1.07	2.12	25441	7.71	
SLU 17	750	-3651	-51708	0.33	1.07	1.72	23266	6.37	
SLU 17	600	-3642	-64613	0.33	1.07	2.15	25582	7.02	
SLU 18	750	-5338	-54417	0.33	1.07	1.81	23771	4.45	
SLU 18	600	-5330	-67316	0.33	1.07	2.24	26041	4.89	
SLU 19	750	-5719	-54766	0.33	1.07	1.82	23835	4.17	
SLU 19	600	-5709	-67654	0.33	1.07	2.25	26098	4.57	
SLU 20	750	-5890	-55172	0.33	1.07	1.83	23910	4.06	
SLU 20	600	-5881	-68064	0.33	1.07	2.26	26167	4.45	

Verifica a pressoflessione nel piano (7.8.2.2) e taglio con rottura per fessurazione diagonale (C8.7.1.5), gammaM = 2

comb.	quota	N	V par	V orto	M	M orto	N/(l*sp)	N/(l'*sp)	Mu	l'	fvd	Vt scorr.	Vt fess.diag.	
SLV 1	500	-45477	10267	1350	1997912	-70211	1.51	1.51	8213468	430	0.64	19129	28213	
SLV 1	1060	-6850	3035	-877	347272	-18	0.23	0.23	1437216	430	0.38	11403	16971	
SLV 2	500	-48127	7980	1375	1788830	-75437	1.6	1.6	8595562	430	0.65	19659	28824	
SLV 2	1060	-7003	1806	-882	378748	-18	0.23	0.23	1468609	430	0.38	11434	17030	
SLV 3	500	-48109	7867	-198	1744285	13787	1.6	1.6	8592983	430	0.65	19655	28820	
SLV 3	1060	-7014	1403	-636	363736	-37	0.23	0.23	1470775	430	0.38	11436	17034	
SLV 4	500	-50759	5581	-173	1535202	8562	1.69	1.69	8964531	430	0.67	20185	29418	
SLV 4	1060	-7167	173	-641	395212	-36	0.24	0.24	1502130	430	0.38	11467	17093	
SLV 5	500	-49103	5269	3081	1706076	-208490	1.63	1.63	8733594	430	0.66	19854	29046	
SLV 5	1060	-7058	4826	-1043	368667	39	0.23	0.23	1479846	430	0.38	11445	17051	
SLV 6	500	-52054	2722	3109	1473234	-214309	1.73	1.73	9142255	430	0.68	20444	29707	
SLV 6	1060	-7229	3457	-1048	403719	40	0.24	0.24	1514750	430	0.38	11479	17117	
SLV 7	500	-57874	-2728	-2079	860651	71506	1.92	1.92	9909810	430	0.72	21608	30968	
SLV 7	1060	-7605	-615	-239	423546	-23	0.25	0.25	1591378	430	0.38	11554	17261	
SLV 8	500	-60825	-5275	-2052	627809	65687	2.02	2.02	10279321	430	0.74	22198	31588	
SLV 8	1060	-7776	-1984	-245	458598	-22	0.26	0.26	1626141	430	0.39	11589	17326	
SLV 9	500	-54971	-1526	3017	1192120	-243270	1.83	1.83	9533336	430	0.7	21027	30345	
SLV 9	1060	-7409	4669	-944	405001	69	0.25	0.25	1551319	430	0.38	11515	17186	
SLV 10	500	-57922	-4072	3045	959279	-249089	1.92	1.92	9915807	430	0.72	21618	30978	
SLV 10	1060	-7579	3300	-949	440054	70	0.25	0.25	1586133	430	0.38	11549	17251	
SLV 11	500	-63742	-9523	-2143	346696	36725	2.12	2.12	10631696	430	0.76	22782	32190	
SLV 11	1060	-7955	-772	-140	459881	7	0.26	0.26	1662561	430	0.39	11624	17394	
SLV 12	500	-66693	-12069	-2115	113854	30906	2.22	2.22	10975016	430	0.78	23372	32787	
SLV 12	1060	-8126	-2141	-146	494933	8	0.27	0.27	1697234	430	0.39	11659	17458	
SLV 13	500	-65037	-12382	1139	284727	-186146	2.16	2.16	10783987	430	0.77	23041	32453	
SLV 13	1060	-8017	2511	-547	468388	83	0.27	0.27	1675108	430	0.39	11637	17417	
SLV 14	500	-67687	-14668	1164	75645	-191371	2.25	2.25	11087689	430	0.78	23571	32986	
SLV 14	1060	-8171	1282	-552	499864	84	0.27	0.27	1706230	430	0.39	11667	17475	
SLV 15	500	-67669	-14781	-410	31100	-102147	2.25	2.25	11085646	430	0.78	23567	32982	
SLV 15	1060	-8181	879	-306	484852	65	0.27	0.27	1708377	430	0.39	11670	17479	
SLV 16	500	-70319	-17067	-385	-177982	-107372	2.34	2.34	11378801	430	0.8	24097	33506	
SLV 16	1060	-8335	-350	-311	516327	65	0.28	0.28	1739461	430	0.39	11700	17537	

Verifica a pressoflessione fuori piano D.M. 14-01-08 (N.T.C.)
quota 730 Ta 0 Wa 0.15 denominatore 8

comb.	fd	Sa	x	N	M	Mc	c.s.	
SLV 1	11	0.39	6.81	-27649	229207	873607	3.81	
SLV 2	11	0.39	7.62	-30946	229207	965215	4.21	
SLV 3	11	0.39	7.38	-29975	229207	938498	4.09	
SLV 4	11	0.39	8.19	-33272	229207	1028218	4.49	
SLV 5	11	0.39	8.08	-32797	229207	1015450	4.43	
SLV 6	11	0.39	8.98	-36468	229207	1112645	4.85	
SLV 7	11	0.39	9.98	-40548	229207	1216752	5.31	
SLV 8	11	0.39	10.89	-44219	229207	1306939	5.7	
SLV 9	11	0.39	9.77	-39694	229207	1195308	5.21	
SLV 10	11	0.39	10.68	-43366	229207	1286267	5.61	
SLV 11	11	0.39	11.68	-47446	229207	1383445	6.04	
SLV 12	11	0.39	12.59	-51117	229207	1467396	6.4	
SLV 13	11	0.39	12.47	-50642	229207	1456716	6.36	
SLV 14	11	0.39	13.28	-53939	229207	1529658	6.67	
SLV 15	11	0.39	13.04	-52967	229207	1508442	6.58	
SLV 16	11	0.39	13.85	-56264	229207	1579496	6.89	

Verifica dei meccanismi locali di collasso con analisi cinematica lineare
accelerazione limite = 196,01; forza di aggancio al piano = 30

combinazione	N top	N base	V orto	alfa0	M*	e*	a0*	
SLV 1	-6850	-45477	-877	0.673	34.358	0.903	541	
SLV 2	-7003	-48127	-882	0.669	34.471	0.903	538	
SLV 3	-7014	-48109	-636	0.68	34.479	0.903	547	
SLV 4	-7167	-50759	-641	0.675	34.594	0.902	544	
SLV 5	-7058	-49103	-1043	0.66	34.512	0.902	532	
SLV 6	-7229	-52054	-1048	0.655	34.64	0.902	528	
SLV 7	-7605	-57874	-239	0.681	34.925	0.9	550	
SLV 8	-7776	-60825	-245	0.677	35.056	0.899	547	
SLV 9	-7409	-54971	-944	0.655	34.775	0.901	529	
SLV 10	-7579	-57922	-949	0.651	34.905	0.9	525	
SLV 11	-7955	-63742	-140	0.676	35.195	0.899	547	
SLV 12	-8126	-66693	-146	0.672	35.328	0.898	544	
SLV 13	-8017	-65037	-547	0.657	35.243	0.899	532	
SLV 14	-8171	-67687	-552	0.653	35.362	0.898	529	
SLV 15	-8181	-67669	-306	0.664	35.371	0.898	537	
SLV 16	-8335	-70319	-311	0.659	35.491	0.897	534	

Maschio 52
Maschio considerato membratura sismica secondaria
Dati geometrici

X ini.	Y ini.	X fin.	Y fin.	quota i.	quota.s	l	sp.	h netta	h ini.	h fin.	a
1300	240	1300	135	L2	L3	105	70	460	560	560	

Materiale: Muratura in pietrame consolidata con iniezioni LC1
f medio 30
tau 0.9
E 24000
G 8053.69
Fattore di confidenza 1.35

Verifica a pressoflessione per azioni non sismiche 4.5.6.2 D.M. 14-01-08 (N.T.C.) gammaM 3

comb.	quota	N	M	p	es1	es2	ea	ev	e ver (cm)	Ft	Fl	Nu (daN)	
1	1060	-4595	-20699	1	0	3.59	2.3	0,00	5,89	0,68	0,87	31923	
1	730	-10261	-46292	1	0	3.59	2.3	0,00	2,95	0,81	0,87	37985	
1	500	-14827	-48535	1	0	3.59	2.3	0,00	5,89	0,68	0,90	33272	
2	1060	-5214	-23710	1	0	3.6	2.3	0,00	5,90	0,68	0,86	31870	
2	730	-10977	-55386	1	0	3.6	2.3	0,00	2,95	0,81	0,85	37284	
2	500	-15553	-57075	1	0	3.6	2.3	0,00	5,90	0,68	0,89	32831	
3	1060	-6078	-27864	1	0	3.6	2.3	0,00	5,90	0,68	0,86	31820	
3	730	-11995	-70026	1	0	3.6	2.3	0,00	2,95	0,81	0,83	36245	
3	500	-16553	-72507	1	0	3.6	2.3	0,00	5,90	0,68	0,87	32044	
4	1060	-5830	-26634	1	0	3.6	2.3	0,00	5,90	0,68	0,86	31838	
4	730	-11715	-67206	1	0	3.6	2.3	0,00	2,95	0,81	0,83	36377	
4	500	-16256	-70581	1	0	3.6	2.3	0,00	5,90	0,68	0,87	32086	
5	1060	-6139	-28139	1	0	3.61	2.3	0,00	5,91	0,68	0,86	31820	
5	730	-12073	-71753	1	0	3.61	2.3	0,00	2,95	0,81	0,82	36106	
5	500	-16619	-74851	1	0	3.61	2.3	0,00	5,91	0,68	0,87	31907	
6	1060	-5533	-24657	1	0	3.59	2.3	0,00	5,89	0,68	0,87	31975	
6	730	-11368	-59979	1	0	3.59	2.3	0,00	2,95	0,81	0,84	36988	
6	500	-15917	-63021	1	0	3.59	2.3	0,00	5,89	0,68	0,88	32519	
7	1060	-6152	-27667	1	0	3.6	2.3	0,00	5,90	0,68	0,87	31925	
7	730	-12085	-69073	1	0	3.6	2.3	0,00	2,95	0,81	0,83	36410	
7	500	-16643	-71561	1	0	3.6	2.3	0,00	5,90	0,68	0,87	32141	
8	1060	-7017	-31821	1	0	3.6	2.3	0,00	5,90	0,68	0,87	31875	
8	730	-13102	-83713	1	0	3.6	2.3	0,00	2,95	0,81	0,81	35527	
8	500	-17643	-86993	1	0	3.6	2.3	0,00	5,90	0,68	0,85	31442	
9	1060	-6768	-30591	1	0	3.6	2.3	0,00	5,90	0,68	0,87	31892	
9	730	-12822	-80893	1	0	3.6	2.3	0,00	2,95	0,81	0,81	35632	
9	500	-17346	-85067	1	0	3.6	2.3	0,00	5,90	0,68	0,85	31472	
10	1060	-7077	-32096	1	0	3.6	2.3	0,00	5,90	0,68	0,87	31874	
10	730	-13180	-85440	1	0	3.6	2.3	0,00	2,95	0,81	0,81	35405	
10	500	-17709	-89337	1	0	3.6	2.3	0,00	5,90	0,68	0,85	31316	
11	1060	-5974	-26909	1	0	3.59	2.3	0,00	5,89	0,68	0,87	31923	
11	730	-13339	-60179	1	0	3.59	2.3	0,00	2,95	0,81	0,87	37985	
11	500	-19275	-63095	1	0	3.59	2.3	0,00	5,89	0,68	0,90	33272	
12	1060	-6593	-29920	1	0	3.6	2.3	0,00	5,90	0,68	0,87	31881	
12	730	-14055	-69274	1	0	3.6	2.3	0,00	2,95	0,81	0,85	37438	
12	500	-20001	-71635	1	0	3.6	2.3	0,00	5,90	0,68	0,89	32929	
13	1060	-7457	-34074	1	0	3.6	2.3	0,00	5,90	0,68	0,86	31839	
13	730	-15073	-83914	1	0	3.6	2.3	0,00	2,95	0,81	0,83	36600	
13	500	-21001	-87067	1	0	3.6	2.3	0,00	5,90	0,68	0,88	32303	
14	1060	-7208	-32844	1	0	3.6	2.3	0,00	5,90	0,68	0,86	31854	
14	730	-14793	-81093	1	0	3.6	2.3	0,00	2,95	0,81	0,84	36711	
14	500	-20704	-85142	1	0	3.6	2.3	0,00	5,90	0,68	0,88	32341	
15	1060	-7518	-34349	1	0	3.6	2.3	0,00	5,90	0,68	0,86	31839	
15	730	-15151	-85641	1	0	3.6	2.3	0,00	2,95	0,81	0,83	36488	
15	500	-21067	-89411	1	0	3.6	2.3	0,00	5,90	0,68	0,87	32194	
16	1060	-6912	-30866	1	0	3.59	2.3	0,00	5,89	0,68	0,87	31965	
16	730	-14446	-73866	1	0	3.59	2.3	0,00	2,95	0,81	0,85	37200	
16	500	-20365	-77581	1	0	3.59	2.3	0,00	5,89	0,68	0,89	32683	
17	1060	-7531	-33877	1	0	3.6	2.3	0,00	5,90	0,68	0,87	31924	
17	730	-15163	-82961	1	0	3.6	2.3	0,00	2,95	0,81	0,84	36730	
17	500	-21091	-86121	1	0	3.6	2.3	0,00	5,90	0,68	0,88	32379	
18	1060	-8395	-38031	1	0	3.6	2.3	0,00	5,90	0,68	0,87	31883	
18	730	-16181	-97600	1	0	3.6	2.3	0,00	2,95	0,81	0,82	35994	
18	500	-22091	-101553	1	0	3.6	2.3	0,00	5,90	0,68	0,86	31810	
19	1060	-8146	-36801	1	0	3.6	2.3	0,00	5,90	0,68	0,87	31898	
19	730	-15900	-94780	1	0	3.6	2.3	0,00	2,95	0,81	0,82	36087	
19	500	-21794	-99628	1	0	3.6	2.3	0,00	5,90	0,68	0,86	31838	
20	1060	-8456	-38306	1	0	3.6	2.3	0,00	5,90	0,68	0,87	31882	
20	730	-16259	-99327	1	0	3.6	2.3	0,00	2,95	0,81	0,82	35893	

muratura

comb.	quota	N	M	p	es1	es2	ea	ev	e ver (cm)	Ft	Fl	Nu (daN)	
20	500	-22157	-103897	1	0	3.6	2.3	0,00	5,90	0,68	0,86	31708	

Verifica a taglio con rottura per fessurazione diagonale per azioni non sismiche Circ.617 C8.7.1.5 gammaM 3

comb.	quota	Vd	N	ftd	b	sigma0	Vu	c.s.	
SLU 1	750	-400	-9614	0.33	1.5	1.31	3624	9.06	
SLU 1	500	18	-14827	0.33	1.5	2.02	4337	100	
SLU 2	750	-401	-10333	0.33	1.5	1.41	3731	9.31	
SLU 2	500	18	-15553	0.33	1.5	2.12	4428	100	
SLU 3	750	-399	-11356	0.33	1.5	1.55	3877	9.71	
SLU 3	500	17	-16553	0.33	1.5	2.25	4549	100	
SLU 4	750	-398	-11076	0.33	1.5	1.51	3838	9.64	
SLU 4	500	17	-16256	0.33	1.5	2.21	4513	100	
SLU 5	750	-398	-11436	0.33	1.5	1.56	3888	9.76	
SLU 5	500	17	-16619	0.33	1.5	2.26	4557	100	
SLU 6	750	-406	-10724	0.33	1.5	1.46	3787	9.32	
SLU 6	500	18	-15917	0.33	1.5	2.17	4472	100	
SLU 7	750	-407	-11443	0.33	1.5	1.56	3889	9.56	
SLU 7	500	18	-16643	0.33	1.5	2.26	4560	100	
SLU 8	750	-405	-12466	0.33	1.5	1.7	4030	9.94	
SLU 8	500	17	-17643	0.33	1.5	2.4	4678	100	
SLU 9	750	-404	-12186	0.33	1.5	1.66	3992	9.88	
SLU 9	500	17	-17346	0.33	1.5	2.36	4643	100	
SLU 10	750	-404	-12545	0.33	1.5	1.71	4041	9.99	
SLU 10	500	17	-17709	0.33	1.5	2.41	4685	100	
SLU 11	750	-520	-12499	0.33	1.5	1.7	4035	7.76	
SLU 11	500	23	-19275	0.33	1.5	2.62	4864	100	
SLU 12	750	-521	-13217	0.33	1.5	1.8	4130	7.93	
SLU 12	500	23	-20001	0.33	1.5	2.72	4944	100	
SLU 13	750	-519	-14241	0.33	1.5	1.94	4263	8.21	
SLU 13	500	23	-21001	0.33	1.5	2.86	5053	100	
SLU 14	750	-518	-13961	0.33	1.5	1.9	4227	8.16	
SLU 14	500	22	-20704	0.33	1.5	2.82	5021	100	
SLU 15	750	-518	-14320	0.33	1.5	1.95	4273	8.25	
SLU 15	500	22	-21067	0.33	1.5	2.87	5060	100	
SLU 16	750	-526	-13608	0.33	1.5	1.85	4182	7.94	
SLU 16	500	23	-20365	0.33	1.5	2.77	4984	100	
SLU 17	750	-527	-14327	0.33	1.5	1.95	4274	8.11	
SLU 17	500	23	-21091	0.33	1.5	2.87	5063	100	
SLU 18	750	-525	-15350	0.33	1.5	2.09	4403	8.38	
SLU 18	500	22	-22091	0.33	1.5	3.01	5169	100	
SLU 19	750	-524	-15070	0.33	1.5	2.05	4368	8.33	
SLU 19	500	22	-21794	0.33	1.5	2.97	5138	100	
SLU 20	750	-525	-15430	0.33	1.5	2.1	4412	8.41	
SLU 20	500	22	-22157	0.33	1.5	3.01	5176	100	

Verifica a pressoflessione fuori piano D.M. 14-01-08 (N.T.C.)
quota 730 Ta 0.06 Wa 0.15 denominatore 8

comb.	fd	Sa	x	N	M	Mc	c.s.	
SLV 1	11	0.52	11.83	-11734	73493	341278	4.64	
SLV 2	11	0.52	11.98	-11877	73493	344560	4.69	
SLV 3	11	0.52	11.04	-10947	73493	322725	4.39	
SLV 4	11	0.52	11.18	-11089	73493	326120	4.44	
SLV 5	11	0.52	12.66	-12559	73493	360046	4.9	
SLV 6	11	0.52	12.82	-12718	73493	363568	4.95	
SLV 7	11	0.52	10.02	-9935	73493	297956	4.05	
SLV 8	11	0.52	10.18	-10093	73493	301897	4.11	
SLV 9	11	0.52	12.59	-12486	73493	358406	4.88	
SLV 10	11	0.52	12.75	-12644	73493	361939	4.92	
SLV 11	11	0.52	9.94	-9862	73493	296122	4.03	
SLV 12	11	0.52	10.1	-10020	73493	300074	4.08	
SLV 13	11	0.52	11.59	-11490	73493	335585	4.57	
SLV 14	11	0.52	11.73	-11632	73493	338902	4.61	
SLV 15	11	0.52	10.79	-10703	73493	316839	4.31	
SLV 16	11	0.52	10.94	-10845	73493	320268	4.36	

Verifica dei meccanismi locali di collasso con analisi cinematica lineare
accelerazione limite = 196,01; forza di aggancio al piano = 30

combinazione	N top	N base	V orto	alfa0	M*	e*	a0*	
SLV 1	-5397	-16162	68	0.445	11.674	0.892	363	
SLV 2	-5379	-16282	66	0.446	11.657	0.892	363	
SLV 3	-5471	-15462	66	0.442	11.745	0.892	360	
SLV 4	-5454	-15582	65	0.443	11.728	0.892	361	
SLV 5	-5340	-16950	26	0.452	11.62	0.892	368	
SLV 6	-5321	-17082	24	0.453	11.601	0.892	369	
SLV 7	-5589	-14616	20	0.443	11.857	0.893	360	
SLV 8	-5569	-14749	19	0.444	11.838	0.893	361	
SLV 9	-5366	-16930	-12	0.453	11.644	0.892	369	
SLV 10	-5346	-17063	-13	0.453	11.625	0.892	369	
SLV 11	-5614	-14597	-17	0.442	11.882	0.893	360	
SLV 12	-5595	-14729	-19	0.443	11.863	0.893	360	
SLV 13	-5481	-16097	-58	0.443	11.754	0.893	361	
SLV 14	-5464	-16216	-59	0.443	11.738	0.892	361	
SLV 15	-5556	-15397	-59	0.44	11.826	0.893	358	
SLV 16	-5538	-15516	-61	0.44	11.809	0.893	358	

Maschio 53
Dati geometrici

X ini.	Y ini.	X fin.	Y fin.	quota i.	quota.s	l	sp.	h netta	h ini.	h fin.	a
1300	880	1300	360	L2	L3	520	70	460	560	560	

Materiale: Muratura in pietrame consolidata con iniezioni LC1
f medio 30
tau 0.9

E 24000
G 8053.69
Fattore di confidenza 1.35

Verifica a pressoflessione per azioni non sismiche 4.5.6.2 D.M. 14-01-08 (N.T.C.) gammaM 3

comb.	quota	N	M	p	es1	es2	ea	ev	e ver (cm)	Ft	Fl	Nu (daN)
1	1060	-25025	115114	1	0	3.27	2.3	0,00	5,57	0,69	0,97	180993
1	730	-61700	-422792	1	0	3.27	2.3	0,00	2,78	0,81	0,96	210163
1	500	-84234	-654948	1	0	3.27	2.3	0,00	5,57	0,69	0,95	177446
2	1060	-28394	124909	1	0	3.27	2.3	0,00	5,57	0,69	0,97	181158
2	730	-65793	-400621	1	0	3.27	2.3	0,00	2,79	0,81	0,96	211138
2	500	-88374	-602105	1	0	3.27	2.3	0,00	5,57	0,69	0,96	178463
3	1060	-33087	138572	1	0	3.28	2.3	0,00	5,58	0,69	0,97	181305
3	730	-71079	-340355	1	0	3.28	2.3	0,00	2,79	0,81	0,97	212804
3	500	-92983	-496803	1	0	3.28	2.3	0,00	5,58	0,69	0,97	180017
4	1060	-31730	134633	1	0	3.28	2.3	0,00	5,58	0,69	0,97	181248
4	730	-69251	-336696	1	0	3.28	2.3	0,00	2,79	0,81	0,97	212709
4	500	-90819	-504516	1	0	3.28	2.3	0,00	5,58	0,69	0,97	179783
5	1060	-33414	139530	1	0	3.28	2.3	0,00	5,58	0,69	0,97	181305
5	730	-71297	-325611	1	0	3.28	2.3	0,00	2,79	0,81	0,97	213088
5	500	-92889	-478094	1	0	3.28	2.3	0,00	5,58	0,69	0,97	180221
6	1060	-30068	129765	1	0	3.27	2.3	0,00	5,57	0,69	0,97	181214
6	730	-67601	-376055	1	0	3.27	2.3	0,00	2,79	0,81	0,97	211811
6	500	-89616	-557185	1	0	3.27	2.3	0,00	5,57	0,69	0,96	179091
7	1060	-33436	139560	1	0	3.28	2.3	0,00	5,58	0,69	0,97	181331
7	730	-71694	-353885	1	0	3.28	2.3	0,00	2,79	0,81	0,97	212615
7	500	-93756	-504342	1	0	3.28	2.3	0,00	5,58	0,69	0,97	179986
8	1060	-38129	153224	1	0	3.28	2.3	0,00	5,58	0,69	0,98	181438
8	730	-76979	-293618	1	0	3.28	2.3	0,00	2,79	0,81	0,98	214057
8	500	-98365	-399039	1	0	3.28	2.3	0,00	5,58	0,69	0,98	181395
9	1060	-36772	149284	1	0	3.28	2.3	0,00	5,58	0,69	0,98	181393
9	730	-75152	-289960	1	0	3.28	2.3	0,00	2,79	0,81	0,98	213999
9	500	-96200	-406753	1	0	3.28	2.3	0,00	5,58	0,69	0,97	181205
10	1060	-38456	154182	1	0	3.29	2.3	0,00	5,59	0,69	0,98	181436
10	730	-77198	-278875	1	0	3.29	2.3	0,00	2,79	0,81	0,98	214316
10	500	-98270	-380331	1	0	3.29	2.3	0,00	5,59	0,69	0,98	181591
11	1060	-32533	149648	1	0	3.27	2.3	0,00	5,57	0,69	0,97	180993
11	730	-80210	-549630	1	0	3.27	2.3	0,00	2,78	0,81	0,96	210163
11	500	-109504	-851432	1	0	3.27	2.3	0,00	5,57	0,69	0,95	177446
12	1060	-35901	159443	1	0	3.27	2.3	0,00	5,57	0,69	0,97	181123
12	730	-84303	-527459	1	0	3.27	2.3	0,00	2,79	0,81	0,96	210923
12	500	-113644	-798589	1	0	3.27	2.3	0,00	5,57	0,69	0,96	178236
13	1060	-40595	173107	1	0	3.28	2.3	0,00	5,58	0,69	0,97	181248
13	730	-89589	-467192	1	0	3.28	2.3	0,00	2,79	0,81	0,97	212257
13	500	-118254	-693287	1	0	3.28	2.3	0,00	5,58	0,69	0,96	179464
14	1060	-39238	169167	1	0	3.28	2.3	0,00	5,58	0,69	0,97	181199
14	730	-87761	-463534	1	0	3.28	2.3	0,00	2,79	0,81	0,97	212171
14	500	-116089	-701000	1	0	3.28	2.3	0,00	5,58	0,69	0,96	179271
15	1060	-40922	174065	1	0	3.28	2.3	0,00	5,58	0,69	0,97	181248
15	730	-89807	-452449	1	0	3.28	2.3	0,00	2,79	0,81	0,97	212484
15	500	-118159	-674579	1	0	3.28	2.3	0,00	5,58	0,69	0,97	179623
16	1060	-37575	164299	1	0	3.27	2.3	0,00	5,57	0,69	0,97	181169
16	730	-86110	-502893	1	0	3.27	2.3	0,00	2,79	0,81	0,96	211456
16	500	-114886	-753669	1	0	3.27	2.3	0,00	5,57	0,69	0,96	178727
17	1060	-40943	174095	1	0	3.28	2.3	0,00	5,58	0,69	0,97	181269
17	730	-90204	-480722	1	0	3.28	2.3	0,00	2,79	0,81	0,97	212111
17	500	-119026	-700826	1	0	3.28	2.3	0,00	5,58	0,69	0,96	179443
18	1060	-45637	187758	1	0	3.28	2.3	0,00	5,58	0,69	0,98	181365
18	730	-95489	-420456	1	0	3.28	2.3	0,00	2,79	0,81	0,97	213299
18	500	-123635	-595524	1	0	3.28	2.3	0,00	5,58	0,69	0,97	180581
19	1060	-44280	183818	1	0	3.28	2.3	0,00	5,58	0,69	0,98	181325
19	730	-93661	-416797	1	0	3.28	2.3	0,00	2,79	0,81	0,97	213238
19	500	-121471	-603237	1	0	3.28	2.3	0,00	5,58	0,69	0,97	180416
20	1060	-45964	188716	1	0	3.28	2.3	0,00	5,58	0,69	0,98	181364
20	730	-95708	-405712	1	0	3.28	2.3	0,00	2,79	0,81	0,97	213510
20	500	-123541	-576816	1	0	3.28	2.3	0,00	5,58	0,69	0,97	180736

Verifica a taglio con rottura per fessurazione diagonale per azioni non sismiche Circ.617 C8.7.1.5 gammaM 3

comb.	quota	Vd	N	ftd	b	sigma0	Vu	c.s.
SLU 1	750	-913	-59459	0.33	1	1.63	29473	32.3
SLU 1	500	-923	-84234	0.33	1	2.31	34194	37.06
SLU 2	750	-805	-63572	0.33	1	1.75	30308	37.66
SLU 2	500	-815	-88374	0.33	1	2.43	34921	42.85
SLU 3	750	-620	-68941	0.33	1	1.89	31364	50.61
SLU 3	500	-630	-92983	0.33	1	2.55	35713	56.67
SLU 4	750	-648	-67130	0.33	1	1.84	31012	47.84
SLU 4	500	-659	-90819	0.33	1	2.5	35343	53.65
SLU 5	750	-594	-69187	0.33	1	1.9	31411	52.85
SLU 5	500	-605	-92889	0.33	1	2.55	35697	59.01
SLU 6	750	-712	-65426	0.33	1	1.8	30677	43.1
SLU 6	500	-722	-89616	0.33	1	2.46	35136	48.65
SLU 7	750	-604	-69539	0.33	1	1.91	31479	52.12
SLU 7	500	-614	-93756	0.33	1	2.58	35844	58.33
SLU 8	750	-419	-74908	0.33	1	2.06	32498	77.57
SLU 8	500	-430	-98365	0.33	1	2.7	36616	85.21
SLU 9	750	-448	-73097	0.33	1	2.01	32158	71.86
SLU 9	500	-458	-96200	0.33	1	2.64	36255	79.11
SLU 10	750	-394	-75153	0.33	1	2.06	32543	82.69
SLU 10	500	-404	-98270	0.33	1	2.7	36600	90.5
SLU 11	750	-1186	-77297	0.33	1	2.12	32941	27.77
SLU 11	500	-1200	-109504	0.33	1	3.01	38417	32.03
SLU 12	750	-1079	-81409	0.33	1	2.24	33690	31.24
SLU 12	500	-1092	-113644	0.33	1	3.12	39065	35.78
SLU 13	750	-894	-86779	0.33	1	2.38	34643	38.77
SLU 13	500	-907	-118254	0.33	1	3.25	39775	43.85
SLU 14	750	-922	-84968	0.33	1	2.33	34324	37.22
SLU 14	500	-936	-116089	0.33	1	3.19	39443	42.16
SLU 15	750	-868	-87024	0.33	1	2.39	34686	39.95
SLU 15	500	-882	-118159	0.33	1	3.25	39760	45.09
SLU 16	750	-986	-83264	0.33	1	2.29	34022	34.52

muratura

comb.	quota	Vd	N	ftd	b	sigma0	Vu	c.s.	
SLU 16	500	-999	-114886	0.33	1	3.16	39258	39.3	
SLU 17	750	-878	-87376	0.33	1	2.4	34747	39.59	
SLU 17	500	-891	-119026	0.33	1	3.27	39892	44.76	
SLU 18	750	-693	-92746	0.33	1	2.55	35673	51.5	
SLU 18	500	-707	-123635	0.33	1	3.4	40587	57.45	
SLU 19	750	-721	-90935	0.33	1	2.5	35363	49.03	
SLU 19	500	-735	-121471	0.33	1	3.34	40262	54.77	
SLU 20	750	-667	-92991	0.33	1	2.55	35714	53.52	
SLU 20	500	-681	-123541	0.33	1	3.39	40573	59.56	

Verifica a pressoflessione nel piano (7.8.2.2) e taglio con rottura per fessurazione diagonale (C8.7.1.5), gammaM = 2

comb.	quota	N	V par	V orto	M	M orto	N/(l*sp)	N/(l'*sp)	Mu	l'	fvd	Vt scorr.	Vt fess.diag.	
SLV 1	500	-92200	10319	-3041	1952988	222286	2.53	2.53	17542836	520	0.84	30573	44825	
SLV 1	1060	-30026	-2060	767	23891	-79	0.82	0.82	7124852	520	0.5	18138	29626	
SLV 2	500	-93623	11785	-3048	2410794	222482	2.57	2.57	17712814	520	0.85	30858	45113	
SLV 2	1060	-30089	-726	764	1596	-139	0.83	0.83	7138327	520	0.5	18151	29645	
SLV 3	500	-85154	-5045	-3050	-1693278	220901	2.34	2.34	16655987	520	0.8	29164	43371	
SLV 3	1060	-29625	-8721	788	170820	-32	0.81	0.81	7038638	520	0.5	18058	29503	
SLV 4	500	-86577	-3578	-3057	-1235473	221097	2.38	2.38	16841130	520	0.81	29449	43669	
SLV 4	1060	-29687	-7387	785	148525	-92	0.82	0.82	7052150	520	0.5	18071	29522	
SLV 5	500	-100165	25284	-889	5538044	68547	2.75	2.75	18454860	520	0.88	32166	46414	
SLV 5	1060	-30400	4401	200	-116456	215	0.84	0.84	7205084	520	0.5	18213	29741	
SLV 6	500	-101749	26918	-896	6047873	68765	2.8	2.8	18624871	520	0.89	32483	46723	
SLV 6	1060	-30470	5886	197	-141284	148	0.84	0.84	7220050	520	0.5	18227	29762	
SLV 7	500	-76678	-25926	-920	-6616178	63930	2.11	2.11	15489603	520	0.75	27469	41555	
SLV 7	1060	-29063	-17801	271	373308	371	0.8	0.8	6917514	520	0.49	17946	29329	
SLV 8	500	-78263	-24293	-927	-6106349	64148	2.15	2.15	15715907	520	0.76	27786	41900	
SLV 8	1060	-29133	-16316	268	348480	304	0.8	0.8	6932621	520	0.49	17960	29351	
SLV 9	500	-100015	22820	947	4986977	-64605	2.75	2.75	18438557	520	0.88	32136	46384	
SLV 9	1060	-30323	3343	-264	-90909	510	0.83	0.83	7188549	520	0.5	18198	29717	
SLV 10	500	-101599	24454	939	5496807	-64386	2.79	2.79	18608927	520	0.89	32453	46694	
SLV 10	1060	-30393	4828	-267	-115738	444	0.83	0.83	7203523	520	0.5	18212	29739	
SLV 11	500	-76528	-28390	915	-7167244	-69222	2.1	2.19	15467966	499.03	0.77	26950	41522	
SLV 11	1060	-28986	-18859	-193	398855	666	0.8	0.8	6900822	520	0.49	17930	29305	
SLV 12	500	-78113	-26757	908	-6657415	-69003	2.15	2.15	15694630	520	0.76	27756	41868	
SLV 12	1060	-29055	-17374	-196	374026	599	0.8	0.8	6915937	520	0.49	17944	29327	
SLV 13	500	-91700	2105	3076	116101	-221553	2.52	2.52	17482330	520	0.84	30473	44723	
SLV 13	1060	-29768	-5586	-781	109045	906	0.82	0.82	7069553	520	0.5	18087	29547	
SLV 14	500	-93123	3572	3070	573907	-221357	2.56	2.56	17653385	520	0.84	30758	45012	
SLV 14	1060	-29831	-4253	-784	86750	846	0.82	0.82	7083052	520	0.5	18100	29566	
SLV 15	500	-84654	-13258	3067	-3530166	-222938	2.33	2.33	16590148	520	0.8	29064	43266	
SLV 15	1060	-29367	-12247	-760	255975	953	0.81	0.81	6983182	520	0.49	18007	29423	
SLV 16	500	-86077	-11791	3060	-3072360	-222742	2.36	2.36	16776368	520	0.81	29349	43564	
SLV 16	1060	-29430	-10913	-763	233680	893	0.81	0.81	6996719	520	0.5	18019	29443	

Verifica a pressoflessione fuori piano D.M. 14-01-08 (N.T.C.)
quota 730 Ta 0 Wa 0.15 denominatore 8

comb.	fd	Sa	x	N	M	Mc	c.s.	
SLV 1	11	0.39	14.74	-72390	277181	2000127	7.22	
SLV 2	11	0.39	14.97	-73525	277181	2022996	7.3	
SLV 3	11	0.39	13.19	-64786	277181	1840197	6.64	
SLV 4	11	0.39	13.42	-65922	277181	1864824	6.73	
SLV 5	11	0.39	16.25	-79787	277181	2144435	7.74	
SLV 6	11	0.39	16.5	-81052	277181	2167981	7.82	
SLV 7	11	0.39	11.09	-54443	277181	1603736	5.79	
SLV 8	11	0.39	11.34	-55707	277181	1633807	5.89	
SLV 9	11	0.39	16	-78580	277181	2121649	7.65	
SLV 10	11	0.39	16.26	-79845	277181	2145507	7.74	
SLV 11	11	0.39	10.84	-53236	277181	1574722	5.68	
SLV 12	11	0.39	11.1	-54500	277181	1605103	5.79	
SLV 13	11	0.39	13.92	-68366	277181	1916961	6.92	
SLV 14	11	0.39	14.15	-69501	277181	1940760	7	
SLV 15	11	0.39	12.37	-60763	277181	1750802	6.32	
SLV 16	11	0.39	12.6	-61898	277181	1776359	6.41	

Verifica dei meccanismi locali di collasso con analisi cinematica lineare
accelerazione limite = 196,01; forza di aggancio al piano = 30

combinazione	N top	N base	V orto	alfa0	M*	e*	a0*	
SLV 1	-30026	-92200	767	0.411	60.973	0.895	334	
SLV 2	-30089	-93623	764	0.411	61.034	0.895	334	
SLV 3	-29625	-85154	788	0.414	60.587	0.894	336	
SLV 4	-29687	-86577	785	0.413	60.648	0.894	336	
SLV 5	-30400	-100165	200	0.42	61.334	0.895	341	
SLV 6	-30470	-101749	197	0.42	61.402	0.895	341	
SLV 7	-29063	-76678	271	0.428	60.047	0.894	348	
SLV 8	-29133	-78263	268	0.428	60.114	0.894	348	
SLV 9	-30323	-100015	-264	0.419	61.26	0.895	341	
SLV 10	-30393	-101599	-267	0.419	61.327	0.895	340	
SLV 11	-28986	-76528	-193	0.431	59.973	0.894	350	
SLV 12	-29055	-78113	-196	0.43	60.04	0.894	350	
SLV 13	-29768	-91700	-781	0.413	60.726	0.894	335	
SLV 14	-29831	-93123	-784	0.412	60.786	0.894	335	
SLV 15	-29367	-84654	-760	0.416	60.34	0.894	338	
SLV 16	-29430	-86077	-763	0.415	60.4	0.894	338	

Maschio 54
Dati geometrici

X ini.	Y ini.	X fin.	Y fin.	quota i.	quota.s	l	sp.	h netta	h ini.	h fin.	a
1300	1328.4	1300	1030	L2	L3	298.4	70	460	560	560	

Materiale: Muratura in pietrame consolidata con iniezioni LC1
f medio 30
tau 0.9

E 24000
G 8053.69
Fattore di confidenza 1.35

Rinforzo con rete e betoncino su entrambe le facce
Betoncino: C25/30
spessore: 3
acciaio materiale: B450C
BARRE VERTICALI
diametro (mm) 5
passo 20
ancorate ad entrambe le estremità
BARRE ORIZZONTALI
diametro (mm) 5
passo 20
ancorate ad entrambe le estremità

Verifica a pressoflessione nel piano e taglio delle sezioni rinforzate 7.8.3.2 D.M. 14-01-08 (N.T.C.)

comb.	quota sezione	gamma m.	gamma s.	gamma c.	N	V	V orto	M	M orto	c.s.	d	fvd	Vt,c	Vt,M	Vt,S
SLU 1	500	3	1.15	1.5	-48674	979	-252	425672	8190	6.16	298.44	0.37	46423	7699	13758
SLU 1	1060	3	1.15	1.5	-15997	-905	42	-388289	837	18.75	298.44	0.27	46423	5647	13758
SLU 2	500	3	1.15	1.5	-51113	932	-260	400981	8465	5.87	298.44	0.38	46423	7852	13758
SLU 2	1060	3	1.15	1.5	-18048	-906	47	-419310	939	16.62	298.44	0.28	46423	5776	13758
SLU 3	500	3	1.15	1.5	-53987	850	-272	321418	8785	5.56	298.44	0.38	46423	8033	13758
SLU 3	1060	3	1.15	1.5	-20915	-858	56	-463317	1105	14.34	298.44	0.29	46423	5956	13758
SLU 4	500	3	1.15	1.5	-52780	861	-269	312011	8648	5.68	298.44	0.38	46423	7957	13758
SLU 4	1060	3	1.15	1.5	-20092	-835	54	-451156	1074	14.93	298.44	0.28	46423	5904	13758
SLU 5	500	3	1.15	1.5	-53999	838	-273	299666	8786	5.56	298.44	0.38	46423	8034	13758
SLU 5	1060	3	1.15	1.5	-21118	-836	57	-466667	1125	14.21	298.44	0.29	46423	5969	13758
SLU 6	500	3	1.15	1.5	-52138	847	-269	349753	8712	5.75	298.44	0.38	46423	7917	13758
SLU 6	1060	3	1.15	1.5	-19075	-910	50	-434512	993	15.73	298.44	0.28	46423	5840	13758
SLU 7	500	3	1.15	1.5	-54577	801	-277	325062	8986	5.5	298.44	0.39	46423	8070	13758
SLU 7	1060	3	1.15	1.5	-21126	-912	55	-465534	1095	14.2	298.44	0.29	46423	5969	13758
SLU 8	500	3	1.15	1.5	-57451	718	-289	245499	9307	5.22	298.44	0.39	46423	8250	13758
SLU 8	1060	3	1.15	1.5	-23993	-863	64	-509541	1260	12.5	298.44	0.29	46423	6149	13758
SLU 9	500	3	1.15	1.5	-56244	729	-286	236092	9170	5.33	298.44	0.39	46423	8175	13758
SLU 9	1060	3	1.15	1.5	-23170	-841	62	-497379	1229	12.95	298.44	0.29	46423	6097	13758
SLU 10	500	3	1.15	1.5	-57463	706	-290	223746	9307	5.22	298.44	0.39	46423	8251	13758
SLU 10	1060	3	1.15	1.5	-24196	-842	65	-512890	1280	12.4	298.44	0.29	46423	6162	13758
SLU 11	500	3	1.15	1.5	-63277	1273	-327	553374	10647	4.74	298.44	0.41	46423	8616	13758
SLU 11	1060	3	1.15	1.5	-20796	-1176	55	-504775	1088	14.42	298.44	0.28	46423	5948	13758
SLU 12	500	3	1.15	1.5	-65715	1226	-335	528682	10922	4.56	298.44	0.42	46423	8769	13758
SLU 12	1060	3	1.15	1.5	-22847	-1177	60	-535797	1190	13.13	298.44	0.29	46423	6077	13758
SLU 13	500	3	1.15	1.5	-68589	1143	-348	449120	11242	4.37	298.44	0.43	46423	8950	13758
SLU 13	1060	3	1.15	1.5	-25714	-1129	68	-579804	1356	11.67	298.44	0.3	46423	6257	13758
SLU 14	500	3	1.15	1.5	-67383	1155	-344	439713	11105	4.45	298.44	0.42	46423	8874	13758
SLU 14	1060	3	1.15	1.5	-24891	-1107	67	-567642	1325	12.05	298.44	0.3	46423	6206	13758
SLU 15	500	3	1.15	1.5	-68602	1131	-349	427367	11243	4.37	298.44	0.43	46423	8951	13758
SLU 15	1060	3	1.15	1.5	-25917	-1108	69	-583153	1376	11.57	298.44	0.3	46423	6270	13758
SLU 16	500	3	1.15	1.5	-66741	1141	-344	477455	11169	4.49	298.44	0.42	46423	8834	13758
SLU 16	1060	3	1.15	1.5	-23874	-1181	62	-550999	1244	12.56	298.44	0.29	46423	6142	13758
SLU 17	500	3	1.15	1.5	-69179	1094	-352	452763	11443	4.34	298.44	0.43	46423	8987	13758
SLU 17	1060	3	1.15	1.5	-25925	-1183	68	-582020	1346	11.57	298.44	0.3	46423	6270	13758
SLU 18	500	3	1.15	1.5	-72053	1012	-365	373201	11764	4.16	298.44	0.44	46423	9167	13758
SLU 18	1060	3	1.15	1.5	-28792	-1135	76	-626027	1511	10.42	298.44	0.31	46423	6450	13758
SLU 19	500	3	1.15	1.5	-70847	1023	-361	363794	11627	4.23	298.44	0.44	46423	9092	13758
SLU 19	1060	3	1.15	1.5	-27969	-1112	75	-613866	1480	10.73	298.44	0.31	46423	6399	13758
SLU 20	500	3	1.15	1.5	-72066	1000	-366	351448	11764	4.16	298.44	0.44	46423	9168	13758
SLU 20	1060	3	1.15	1.5	-28995	-1113	77	-629377	1531	10.35	298.44	0.31	46423	6463	13758

Verifica a pressoflessione nel piano e taglio delle sezioni rinforzate 7.8.3.2 D.M. 14-01-08 (N.T.C.)

comb.	quota sezione	gamma m.	gamma s.	gamma c.	N	V	V orto	M	M orto	c.s.	d	fvd	Vt,c	Vt,M	Vt,S
SLV 1	500	2	1.15	1.5	-59506	1593	-1514	653626	102608	6.08	298.44	0.6	69635	12569	13758
SLV 1	1060	2	1.15	1.5	-18779	-2267	279	-440052	406	19.27	298.44	0.42	69635	8732	13758
SLV 2	500	2	1.15	1.5	-56127	3014	-1498	923617	102065	6.45	298.44	0.59	69635	12251	13758
SLV 2	1060	2	1.15	1.5	-18660	-1363	284	-459540	510	19.39	298.44	0.42	69635	8721	13758
SLV 3	500	2	1.15	1.5	-69371	-6678	-1691	-988401	117825	5.22	298.44	0.65	69635	13498	13758
SLV 3	1060	2	1.15	1.5	-19282	-4160	337	-365092	689	18.77	298.44	0.42	69635	8780	13758
SLV 4	500	2	1.15	1.5	-65991	-5257	-1675	-718410	117283	5.48	298.44	0.63	69635	13180	13758
SLV 4	1060	2	1.15	1.5	-19164	-3257	342	-384580	794	18.88	298.44	0.42	69635	8769	13758
SLV 5	500	2	1.15	1.5	-40529	13052	-379	2823288	13964	5.42	249.22	0.55	58151	9633	11489
SLV 5	1060	2	1.15	1.5	-18126	1199	28	-539951	340	19.96	298.44	0.42	69635	8671	13758
SLV 6	500	2	1.15	1.5	-36766	14634	-361	3123959	13360	5	239.22	0.54	55817	9045	11028
SLV 6	1060	2	1.15	1.5	-17994	2205	35	-561654	457	20.11	309.22	0.41	72151	8910	14255
SLV 7	500	2	1.15	1.5	-73410	-14519	-969	-2650136	64688	4.75	299.22	0.66	69817	13897	13794
SLV 7	1060	2	1.15	1.5	-19804	-5114	221	-290085	1286	18.27	298.44	0.42	69635	8829	13758
SLV 8	500	2	1.15	1.5	-69647	-12936	-951	-2349465	64084	5.1	299.22	0.65	69817	13543	13794
SLV 8	1060	2	1.15	1.5	-19672	-4108	228	-311787	1403	18.4	298.44	0.42	69635	8817	13758
SLV 9	500	2	1.15	1.5	-33963	14671	418	3054119	-46825	5.09	229.22	0.53	53484	8548	10567
SLV 9	1060	2	1.15	1.5	-18064	2319	-128	-551568	573	20.03	309.22	0.41	72151	8917	14255
SLV 10	500	2	1.15	1.5	-30199	16254	436	3354790	-47429	4.32	209.22	0.53	48817	7727	9645
SLV 10	1060	2	1.15	1.5	-17932	3325	-122	-573271	690	20.11	309.22	0.41	72151	8904	14255
SLV 11	500	2	1.15	1.5	-66844	-12899	-172	-2419305	3899	5.21	299.22	0.63	69817	13279	13794
SLV 11	1060	2	1.15	1.5	-19742	-3993	65	-301702	1519	18.33	298.44	0.42	69635	8823	13758
SLV 12	500	2	1.15	1.5	-63080	-11317	-154	-2118633	3295	5.64	299.22	0.62	69817	12924	13794
SLV 12	1060	2	1.15	1.5	-19610	-2988	71	-323404	1636	18.45	298.44	0.42	69635	8811	13758
SLV 13	500	2	1.15	1.5	-37619	6992	1142	1423064	-100023	8.1	279.22	0.51	65151	10059	12872
SLV 13	1060	2	1.15	1.5	-18572	1468	-243	-478775	1182	19.48	298.44	0.42	69635	8713	13758
SLV 14	500	2	1.15	1.5	-34239	8413	1158	1693055	-100565	7.95	269.22	0.5	62817	9507	12411
SLV 14	1060	2	1.15	1.5	-18454	2371	-237	-498263	1287	19.61	298.44	0.42	69635	8702	13758
SLV 15	500	2	1.15	1.5	-47483	-1279	965	-218963	-84806	7.62	298.44	0.55	69635	11436	13758
SLV 15	1060	2	1.15	1.5	-19076	-426	-185	-403815	1466	18.97	298.44	0.42	69635	8760	13758
SLV 16	500	2	1.15	1.5	-44103	142	981	51028	-85348	8.21	298.44	0.53	69635	11118	13758
SLV 16	1060	2	1.15	1.5	-18957	478	-179	-423303	1570	19.09	298.44	0.42	69635	8749	13758

Verifica a pressoflessione fuori piano muratura rinforzata D.M. 14-01-08 (N.T.C.)

quota 730 Ta 0 Wa 0.15 denominatore 8

comb.	fd	fcd	fyd	N	Sa	M	x	c.s.	
SLV 1	11	141	3913	-39900	0.39	159078	298	9.64	
SLV 2	11	141	3913	-37825	0.39	159078	298	10.17	
SLV 3	11	141	3913	-48016	0.39	159078	298	8.01	
SLV 4	11	141	3913	-45942	0.39	159078	298	8.37	
SLV 5	11	141	3913	-28050	0.39	159078	298	13.71	
SLV 6	11	141	3913	-25740	0.39	159078	298	14.94	
SLV 7	11	141	3913	-55104	0.39	159078	298	6.98	
SLV 8	11	141	3913	-52794	0.39	159078	298	7.28	
SLV 9	11	141	3913	-25909	0.39	159078	298	14.84	
SLV 10	11	141	3913	-23598	0.39	159078	298	16.3	
SLV 11	11	141	3913	-52962	0.39	159078	298	7.26	
SLV 12	11	141	3913	-50652	0.39	159078	298	7.59	
SLV 13	11	141	3913	-32761	0.39	159078	298	11.74	
SLV 14	11	141	3913	-30686	0.39	159078	298	12.53	
SLV 15	11	141	3913	-40877	0.39	159078	298	9.41	
SLV 16	11	141	3913	-38802	0.39	159078	298	9.91	

Per la verifica seguente non si considerano i rinforzi predisposti.

Verifica dei meccanismi locali di collasso con analisi cinematica lineare
accelerazione limite = 196,01; forza di aggancio al piano = 30

combinazione	N top	N base	V orto	alfa0	M*	e*	a0*	
SLV 1	-18779	-59506	279	0.399	36.489	0.897	323	
SLV 2	-18660	-56127	284	0.4	36.374	0.897	324	
SLV 3	-19282	-69371	337	0.392	36.978	0.897	317	
SLV 4	-19164	-65991	342	0.393	36.862	0.897	318	
SLV 5	-18126	-40529	28	0.415	35.856	0.896	337	
SLV 6	-17994	-36766	35	0.416	35.728	0.896	338	
SLV 7	-19804	-73410	221	0.39	37.486	0.898	316	
SLV 8	-19672	-69647	228	0.391	37.357	0.898	317	
SLV 9	-18064	-33963	-128	0.412	35.796	0.896	335	
SLV 10	-17932	-30199	-122	0.414	35.669	0.896	336	
SLV 11	-19742	-66844	65	0.396	37.426	0.898	320	
SLV 12	-19610	-63080	71	0.397	37.297	0.898	321	
SLV 13	-18572	-37619	-243	0.403	36.289	0.896	326	
SLV 14	-18454	-34239	-237	0.404	36.174	0.896	328	
SLV 15	-19076	-47483	-185	0.399	36.777	0.897	323	
SLV 16	-18957	-44103	-179	0.4	36.662	0.897	324	

Maschio 55
Maschio considerato membratura sismica secondaria
Dati geometrici

X ini.	Y ini.	X fin.	Y fin.	quota i.	quota.s	l	sp.	h netta	h ini.	h fin.	a
1300	1530	1300	1445	L2	L3	85	70	460	560	560	

Materiale: Muratura in pietrame consolidata con iniezioni LC1
f medio 30
tau 0.9
E 24000
G 8053.69
Fattore di confidenza 1.35

Verifica a pressoflessione per azioni non sismiche 4.5.6.2 D.M. 14-01-08 (N.T.C.) gammaM 3

comb.	quota	N	M	p	es1	es2	ea	ev	e ver (cm)	Ft	Fl	Nu (daN)	
1	1060	-3935	21701	1	0	3.4	2.3	0,00	5,70	0,68	0,80	24067	
1	730	-9456	74351	1	0	3.4	2.3	0,00	2,85	0,81	0,72	25830	
1	500	-13157	76338	1	0	3.4	2.3	0,00	5,70	0,68	0,79	23748	
2	1060	-4456	24663	1	0	3.41	2.3	0,00	5,71	0,68	0,80	24027	
2	730	-10091	82132	1	0	3.41	2.3	0,00	2,85	0,81	0,72	25612	
2	500	-13761	85383	1	0	3.41	2.3	0,00	5,71	0,68	0,77	23285	
3	1060	-5191	28538	1	0	3.42	2.3	0,00	5,72	0,68	0,80	24054	
3	730	-11004	91930	1	0	3.42	2.3	0,00	2,86	0,81	0,71	25444	
3	500	-14686	94702	1	0	3.42	2.3	0,00	5,72	0,68	0,76	23002	
4	1060	-4985	27237	1	0	3.41	2.3	0,00	5,71	0,68	0,80	24098	
4	730	-10761	88347	1	0	3.41	2.3	0,00	2,86	0,81	0,72	25556	
4	500	-14478	89652	1	0	3.41	2.3	0,00	5,71	0,68	0,77	23292	
5	1060	-5246	28718	1	0	3.42	2.3	0,00	5,72	0,68	0,80	24080	
5	730	-11079	92238	1	0	3.42	2.3	0,00	2,86	0,81	0,71	25466	
5	500	-14780	94174	1	0	3.42	2.3	0,00	5,72	0,68	0,77	23088	
6	1060	-4731	25491	1	0	3.4	2.3	0,00	5,70	0,68	0,80	24196	
6	730	-10444	84545	1	0	3.4	2.3	0,00	2,85	0,81	0,72	25649	
6	500	-14108	88059	1	0	3.4	2.3	0,00	5,70	0,68	0,77	23251	
7	1060	-5252	28453	1	0	3.41	2.3	0,00	5,71	0,68	0,80	24149	
7	730	-11078	92326	1	0	3.41	2.3	0,00	2,86	0,81	0,71	25462	
7	500	-14712	97103	1	0	3.41	2.3	0,00	5,71	0,68	0,76	22841	
8	1060	-5987	32329	1	0	3.42	2.3	0,00	5,72	0,68	0,80	24158	
8	730	-11992	102124	1	0	3.42	2.3	0,00	2,86	0,81	0,71	25320	
8	500	-15637	106423	1	0	3.42	2.3	0,00	5,72	0,68	0,75	22603	
9	1060	-5781	31028	1	0	3.41	2.3	0,00	5,71	0,68	0,80	24200	
9	730	-11749	98542	1	0	3.41	2.3	0,00	2,86	0,81	0,71	25420	
9	500	-15429	101372	1	0	3.41	2.3	0,00	5,71	0,68	0,76	22869	
10	1060	-6041	32509	1	0	3.42	2.3	0,00	5,72	0,68	0,80	24179	
10	730	-12066	102433	1	0	3.42	2.3	0,00	2,86	0,81	0,71	25341	
10	500	-15731	105894	1	0	3.42	2.3	0,00	5,72	0,68	0,75	22686	
11	1060	-5116	28211	1	0	3.4	2.3	0,00	5,70	0,68	0,80	24067	
11	730	-12293	96656	1	0	3.4	2.3	0,00	2,85	0,81	0,72	25830	
11	500	-17104	99240	1	0	3.4	2.3	0,00	5,70	0,68	0,79	23748	
12	1060	-5637	31173	1	0	3.4	2.3	0,00	5,70	0,68	0,80	24035	
12	730	-12927	104437	1	0	3.4	2.3	0,00	2,85	0,81	0,72	25660	
12	500	-17708	108285	1	0	3.4	2.3	0,00	5,70	0,68	0,78	23388	
13	1060	-6372	35049	1	0	3.41	2.3	0,00	5,71	0,68	0,80	24056	

comb.	quota	N	M	p	es1	es2	ea	ev	e ver (cm)	Ft	Fl	Nu (daN)	
13	730	-13841	114235	1	0	3.41	2.3	0,00	2,86	0,81	0,72	25523	
13	500	-18633	117604	1	0	3.41	2.3	0,00	5,71	0,68	0,77	23159	
14	1060	-6166	33748	1	0	3.41	2.3	0,00	5,71	0,68	0,80	24092	
14	730	-13598	110652	1	0	3.41	2.3	0,00	2,85	0,81	0,72	25613	
14	500	-18425	112553	1	0	3.41	2.3	0,00	5,71	0,68	0,78	23389	
15	1060	-6426	35229	1	0	3.41	2.3	0,00	5,71	0,68	0,80	24077	
15	730	-13915	114543	1	0	3.41	2.3	0,00	2,86	0,81	0,72	25540	
15	500	-18727	117076	1	0	3.41	2.3	0,00	5,71	0,68	0,77	23226	
16	1060	-5911	32001	1	0	3.4	2.3	0,00	5,70	0,68	0,80	24170	
16	730	-13280	106850	1	0	3.4	2.3	0,00	2,85	0,81	0,72	25688	
16	500	-18055	110960	1	0	3.4	2.3	0,00	5,70	0,68	0,77	23360	
17	1060	-6433	34963	1	0	3.41	2.3	0,00	5,71	0,68	0,80	24134	
17	730	-13915	114632	1	0	3.41	2.3	0,00	2,85	0,81	0,72	25537	
17	500	-18659	120005	1	0	3.41	2.3	0,00	5,71	0,68	0,76	23032	
18	1060	-7168	38839	1	0	3.42	2.3	0,00	5,72	0,68	0,80	24143	
18	730	-14829	124429	1	0	3.42	2.3	0,00	2,86	0,81	0,71	25417	
18	500	-19584	129324	1	0	3.42	2.3	0,00	5,72	0,68	0,76	22832	
19	1060	-6961	37538	1	0	3.41	2.3	0,00	5,71	0,68	0,80	24177	
19	730	-14586	120847	1	0	3.41	2.3	0,00	2,86	0,81	0,71	25499	
19	500	-19376	124274	1	0	3.41	2.3	0,00	5,71	0,68	0,76	23047	
20	1060	-7222	39019	1	0	3.41	2.3	0,00	5,71	0,68	0,80	24161	
20	730	-14903	124738	1	0	3.41	2.3	0,00	2,86	0,81	0,71	25433	
20	500	-19678	128796	1	0	3.41	2.3	0,00	5,71	0,68	0,76	22897	

Verifica a taglio con rottura per fessurazione diagonale per azioni non sismiche Circ.617 C8.7.1.5 gammaM 3

comb.	quota	Vd	N	ftd	b	sigma0	Vu	c.s.	
SLU 1	750	386	-8945	0.33	1.5	1.5	3104	8.04	
SLU 1	500	-26	-13157	0.33	1.5	2.21	3653	100	
SLU 2	750	390	-9575	0.33	1.5	1.61	3192	8.17	
SLU 2	500	-26	-13761	0.33	1.5	2.31	3725	100	
SLU 3	750	450	-10479	0.33	1.5	1.76	3314	7.37	
SLU 3	500	-29	-14686	0.33	1.5	2.47	3833	100	
SLU 4	750	471	-10237	0.33	1.5	1.72	3282	6.97	
SLU 4	500	-31	-14478	0.33	1.5	2.43	3809	100	
SLU 5	750	473	-10552	0.33	1.5	1.77	3324	7.02	
SLU 5	500	-31	-14780	0.33	1.5	2.48	3844	100	
SLU 6	750	424	-9923	0.33	1.5	1.67	3240	7.65	
SLU 6	500	-27	-14108	0.33	1.5	2.37	3766	100	
SLU 7	750	428	-10553	0.33	1.5	1.77	3324	7.77	
SLU 7	500	-28	-14712	0.33	1.5	2.47	3836	100	
SLU 8	750	488	-11457	0.33	1.5	1.93	3442	7.06	
SLU 8	500	-31	-15637	0.33	1.5	2.63	3941	100	
SLU 9	750	509	-11214	0.33	1.5	1.88	3411	6.71	
SLU 9	500	-32	-15429	0.33	1.5	2.59	3918	100	
SLU 10	750	511	-11529	0.33	1.5	1.94	3451	6.76	
SLU 10	500	-33	-15731	0.33	1.5	2.64	3952	100	
SLU 11	750	502	-11629	0.33	1.5	1.95	3464	6.9	
SLU 11	500	-33	-17104	0.33	1.5	2.87	4102	100	
SLU 12	750	506	-12259	0.33	1.5	2.06	3543	7	
SLU 12	500	-33	-17708	0.33	1.5	2.98	4166	100	
SLU 13	750	566	-13163	0.33	1.5	2.21	3654	6.46	
SLU 13	500	-37	-18633	0.33	1.5	3.13	4263	100	
SLU 14	750	587	-12920	0.33	1.5	2.17	3625	6.18	
SLU 14	500	-38	-18425	0.33	1.5	3.1	4241	100	
SLU 15	750	589	-13235	0.33	1.5	2.22	3663	6.22	
SLU 15	500	-38	-18727	0.33	1.5	3.15	4273	100	
SLU 16	750	539	-12607	0.33	1.5	2.12	3586	6.65	
SLU 16	500	-35	-18055	0.33	1.5	3.03	4203	100	
SLU 17	750	544	-13236	0.33	1.5	2.22	3663	6.73	
SLU 17	500	-35	-18659	0.33	1.5	3.14	4266	100	
SLU 18	750	603	-14140	0.33	1.5	2.38	3770	6.25	
SLU 18	500	-39	-19584	0.33	1.5	3.29	4360	100	
SLU 19	750	624	-13898	0.33	1.5	2.34	3742	5.99	
SLU 19	500	-40	-19376	0.33	1.5	3.26	4339	100	
SLU 20	750	627	-14213	0.33	1.5	2.39	3778	6.03	
SLU 20	500	-40	-19678	0.33	1.5	3.31	4370	100	

Verifica a pressoflessione fuori piano D.M. 14-01-08 (N.T.C.)
quota 730 Ta 0.06 Wa 0.15 denominatore 8

comb.	fd	Sa	x	N	M	Mc	c.s.	
SLV 1	11	0.52	12.51	-10042	59494	288670	4.85	
SLV 2	11	0.52	12.56	-10082	59494	289552	4.87	
SLV 3	11	0.52	12.75	-10239	59494	293059	4.93	
SLV 4	11	0.52	12.8	-10278	59494	293932	4.94	
SLV 5	11	0.52	12.41	-9962	59494	286855	4.82	
SLV 6	11	0.52	12.46	-10006	59494	287843	4.84	
SLV 7	11	0.52	13.22	-10616	59494	301366	5.07	
SLV 8	11	0.52	13.28	-10660	59494	302318	5.08	
SLV 9	11	0.52	12.57	-10091	59494	289763	4.87	
SLV 10	11	0.52	12.62	-10135	59494	290743	4.89	
SLV 11	11	0.52	13.38	-10745	59494	304168	5.11	
SLV 12	11	0.52	13.44	-10789	59494	305113	5.13	
SLV 13	11	0.52	13.05	-10473	59494	298237	5.01	
SLV 14	11	0.52	13.09	-10512	59494	299099	5.03	
SLV 15	11	0.52	13.29	-10669	59494	302521	5.08	
SLV 16	11	0.52	13.34	-10708	59494	303373	5.1	

Verifica dei meccanismi locali di collasso con analisi cinematica lineare
accelerazione limite = 196,01; forza di aggancio al piano = 30

combinazione	N top	N base	V orto	alfa0	M*	e*	a0*	
SLV 1	-4654	-13819	59	0.431	9.722	0.893	351	
SLV 2	-4656	-13905	61	0.431	9.725	0.893	350	
SLV 3	-4660	-13440	67	0.43	9.728	0.893	349	
SLV 4	-4662	-13527	70	0.429	9.73	0.893	349	
SLV 5	-4659	-14523	8	0.437	9.728	0.893	356	
SLV 6	-4662	-14619	12	0.437	9.73	0.893	355	
SLV 7	-4679	-13262	36	0.433	9.746	0.894	352	
SLV 8	-4681	-13358	39	0.432	9.749	0.894	352	
SLV 9	-4670	-14752	-26	0.434	9.738	0.894	353	
SLV 10	-4672	-14848	-23	0.435	9.74	0.894	354	

muratura

combinazione	N top	N base	V orto	alfa0	M*	e*	a0*	
SLV 11	-4689	-13491	1	0.437	9.757	0.894	355	
SLV 12	-4692	-13587	4	0.436	9.759	0.894	355	
SLV 13	-4689	-14583	-57	0.43	9.757	0.894	349	
SLV 14	-4692	-14670	-54	0.43	9.759	0.894	350	
SLV 15	-4695	-14205	-49	0.43	9.762	0.894	350	
SLV 16	-4697	-14291	-46	0.431	9.764	0.894	350	

Maschio 56
Maschio considerato membratura sismica secondaria
Dati geometrici

X ini.	Y ini.	X fin.	Y fin.	quota i.	quota.s	l	sp.	h netta	h ini.	h fin.	a
1770	135	1855	135	L2	L3	85	70	460	560	560	

Materiale: Muratura in pietrame consolidata con iniezioni LC1
f medio 30
tau 0.9
E 24000
G 8053.69
Fattore di confidenza 1.35

Verifica a pressoflessione per azioni non sismiche 4.5.6.2 D.M. 14-01-08 (N.T.C.) gammaM 3

comb.	quota	N	M	p	es1	es2	ea	ev	e ver (cm)	Ft	Fl	Nu (daN)	
1	1060	-1074	746	1	0	0	2.3	0,00	2,30	0,83	0,97	35828	
1	730	-5869	-40959	1	0	0	2.3	0,00	2,30	0,83	0,74	27346	
1	500	-8776	-13078	1	0	0	2.3	0,00	2,30	0,83	0,95	34753	
2	1060	-1104	1641	1	0	0	2.3	0,00	2,30	0,83	0,95	34758	
2	730	-5906	-40437	1	0	0	2.3	0,00	2,30	0,83	0,75	27526	
2	500	-8809	-13070	1	0	0	2.3	0,00	2,30	0,83	0,95	34762	
3	1060	-1154	2456	1	0	0	2.3	0,00	2,30	0,83	0,92	33894	
3	730	-5985	-40730	1	0	0	2.3	0,00	2,30	0,83	0,75	27580	
3	500	-8891	-14751	1	0	0	2.3	0,00	2,30	0,83	0,94	34525	
4	1060	-1146	1909	1	0	0	2.3	0,00	2,30	0,83	0,94	34517	
4	730	-5980	-41379	1	0	0	2.3	0,00	2,30	0,83	0,75	27427	
4	500	-8893	-15480	1	0	0	2.3	0,00	2,30	0,83	0,94	34415	
5	1060	-1161	2357	1	0	0	2.3	0,00	2,30	0,83	0,93	34026	
5	730	-5999	-41117	1	0	0	2.3	0,00	2,30	0,83	0,75	27515	
5	500	-8909	-15476	1	0	0	2.3	0,00	2,30	0,83	0,94	34420	
6	1060	-1141	2579	1	0	0	2.3	0,00	2,30	0,83	0,92	33713	
6	730	-5957	-40134	1	0	0	2.3	0,00	2,30	0,83	0,75	27673	
6	500	-8866	-13880	1	0	0	2.3	0,00	2,30	0,83	0,94	34652	
7	1060	-1170	3475	1	0	0	2.3	0,00	2,30	0,83	0,89	32758	
7	730	-5995	-39611	1	0	0	2.3	0,00	2,30	0,83	0,76	27848	
7	500	-8899	-13872	1	0	0	2.3	0,00	2,30	0,83	0,94	34661	
8	1060	-1221	4289	1	0	0	2.3	0,00	2,30	0,83	0,87	32024	
8	730	-6073	-39905	1	0	0	2.3	0,00	2,30	0,83	0,76	27898	
8	500	-8981	-15553	1	0	0	2.3	0,00	2,30	0,83	0,94	34428	
9	1060	-1213	3743	1	0	0	2.3	0,00	2,30	0,83	0,89	32600	
9	730	-6069	-40553	1	0	0	2.3	0,00	2,30	0,83	0,75	27747	
9	500	-8984	-16282	1	0	0	2.3	0,00	2,30	0,83	0,93	34319	
10	1060	-1228	4190	1	0	0	2.3	0,00	2,30	0,83	0,87	32158	
10	730	-6088	-40292	1	0	0	2.3	0,00	2,30	0,83	0,76	27833	
10	500	-9000	-16278	1	0	0	2.3	0,00	2,30	0,83	0,93	34324	
11	1060	-1397	970	1	0	0	2.3	0,00	2,30	0,83	0,97	35828	
11	730	-7629	-53247	1	0	0	2.3	0,00	2,30	0,83	0,74	27346	
11	500	-11409	-17002	1	0	0	2.3	0,00	2,30	0,83	0,95	34753	
12	1060	-1426	1865	1	0	0	2.3	0,00	2,30	0,83	0,95	35000	
12	730	-7667	-52724	1	0	0	2.3	0,00	2,30	0,83	0,75	27484	
12	500	-11441	-16993	1	0	0	2.3	0,00	2,30	0,83	0,95	34760	
13	1060	-1477	2679	1	0	0	2.3	0,00	2,30	0,83	0,93	34316	
13	730	-7745	-53018	1	0	0	2.3	0,00	2,30	0,83	0,75	27527	
13	500	-11523	-18675	1	0	0	2.3	0,00	2,30	0,83	0,94	34578	
14	1060	-1469	2133	1	0	0	2.3	0,00	2,30	0,83	0,95	34805	
14	730	-7741	-53667	1	0	0	2.3	0,00	2,30	0,83	0,75	27409	
14	500	-11526	-19404	1	0	0	2.3	0,00	2,30	0,83	0,94	34493	
15	1060	-1483	2581	1	0	0	2.3	0,00	2,30	0,83	0,94	34417	
15	730	-7760	-53405	1	0	0	2.3	0,00	2,30	0,83	0,75	27477	
15	500	-11542	-19399	1	0	0	2.3	0,00	2,30	0,83	0,94	34496	
16	1060	-1463	2803	1	0	0	2.3	0,00	2,30	0,83	0,93	34179	
16	730	-7718	-52422	1	0	0	2.3	0,00	2,30	0,83	0,75	27599	
16	500	-11499	-17803	1	0	0	2.3	0,00	2,30	0,83	0,94	34675	
17	1060	-1493	3699	1	0	0	2.3	0,00	2,30	0,83	0,91	33421	
17	730	-7756	-51899	1	0	0	2.3	0,00	2,30	0,83	0,75	27734	
17	500	-11532	-17795	1	0	0	2.3	0,00	2,30	0,83	0,94	34682	
18	1060	-1543	4513	1	0	0	2.3	0,00	2,30	0,83	0,89	32818	
18	730	-7834	-52192	1	0	0	2.3	0,00	2,30	0,83	0,76	27774	
18	500	-11614	-19477	1	0	0	2.3	0,00	2,30	0,83	0,94	34501	
19	1060	-1535	3966	1	0	0	2.3	0,00	2,30	0,83	0,91	33278	
19	730	-7830	-52841	1	0	0	2.3	0,00	2,30	0,83	0,75	27657	
19	500	-11616	-20205	1	0	0	2.3	0,00	2,30	0,83	0,94	34417	
20	1060	-1550	4414	1	0	0	2.3	0,00	2,30	0,83	0,90	32921	
20	730	-7848	-52580	1	0	0	2.3	0,00	2,30	0,83	0,75	27724	
20	500	-11633	-20201	1	0	0	2.3	0,00	2,30	0,83	0,94	34421	

Verifica a taglio con rottura per fessurazione diagonale per azioni non sismiche Circ.617 C8.7.1.5 gammaM 3

comb.	quota	Vd	N	ftd	b	sigma0	Vu	c.s.	
SLU 1	750	-38	-5296	0.33	1.5	0.89	2533	67.48	
SLU 1	600	1	-7346	0.33	1.5	1.23	2868	100	
SLU 2	750	-39	-5327	0.33	1.5	0.9	2538	65.82	
SLU 2	600	1	-7384	0.33	1.5	1.24	2874	100	
SLU 3	750	-40	-5394	0.33	1.5	0.91	2550	63.86	
SLU 3	600	1	-7466	0.33	1.5	1.25	2886	100	
SLU 4	750	-39	-5392	0.33	1.5	0.91	2550	64.57	

comb.	quota	Vd	N	ftd	b	sigma0	Vu	c.s.	
SLU 4	600	1	-7462	0.33	1.5	1.25	2886	100	
SLU 5	750	-40	-5408	0.33	1.5	0.91	2552	63.8	
SLU 5	600	1	-7481	0.33	1.5	1.26	2888	100	
SLU 6	750	-40	-5372	0.33	1.5	0.9	2546	64.36	
SLU 6	600	1	-7438	0.33	1.5	1.25	2882	100	
SLU 7	750	-41	-5403	0.33	1.5	0.91	2552	62.86	
SLU 7	600	1	-7476	0.33	1.5	1.26	2888	100	
SLU 8	750	-42	-5470	0.33	1.5	0.92	2563	61.09	
SLU 8	600	0	-7557	0.33	1.5	1.27	2900	100	
SLU 9	750	-42	-5468	0.33	1.5	0.92	2563	61.73	
SLU 9	600	0	-7554	0.33	1.5	1.27	2900	100	
SLU 10	750	-42	-5484	0.33	1.5	0.92	2566	61.04	
SLU 10	600	0	-7573	0.33	1.5	1.27	2902	100	
SLU 11	750	-49	-6885	0.33	1.5	1.16	2796	57.29	
SLU 11	600	1	-9550	0.33	1.5	1.61	3189	100	
SLU 12	750	-50	-6916	0.33	1.5	1.16	2801	56.21	
SLU 12	600	1	-9588	0.33	1.5	1.61	3194	100	
SLU 13	750	-51	-6983	0.33	1.5	1.17	2811	54.91	
SLU 13	600	1	-9669	0.33	1.5	1.63	3205	100	
SLU 14	750	-51	-6981	0.33	1.5	1.17	2811	55.39	
SLU 14	600	1	-9666	0.33	1.5	1.62	3205	100	
SLU 15	750	-51	-6996	0.33	1.5	1.18	2813	54.88	
SLU 15	600	1	-9685	0.33	1.5	1.63	3207	100	
SLU 16	750	-51	-6961	0.33	1.5	1.17	2808	55.25	
SLU 16	600	1	-9642	0.33	1.5	1.62	3201	100	
SLU 17	750	-52	-6992	0.33	1.5	1.18	2813	54.24	
SLU 17	600	1	-9680	0.33	1.5	1.63	3206	100	
SLU 18	750	-53	-7059	0.33	1.5	1.19	2823	53.05	
SLU 18	600	1	-9761	0.33	1.5	1.64	3218	100	
SLU 19	750	-53	-7057	0.33	1.5	1.19	2823	53.49	
SLU 19	600	1	-9758	0.33	1.5	1.64	3217	100	
SLU 20	750	-53	-7072	0.33	1.5	1.19	2825	53.02	
SLU 20	600	1	-9777	0.33	1.5	1.64	3220	100	

Verifica a pressoflessione fuori piano D.M. 14-01-08 (N.T.C.)
quota 730 Ta 0.06 Wa 0.15 denominatore 8

comb.	fd	Sa	x	N	M	Mc	c.s.	
SLV 1	11	0.52	6.96	-5590	59494	176178	2.96	
SLV 2	11	0.52	6.71	-5384	59494	170378	2.86	
SLV 3	11	0.52	6.83	-5479	59494	173073	2.91	
SLV 4	11	0.52	6.57	-5273	59494	167245	2.81	
SLV 5	11	0.52	7.59	-6093	59494	190138	3.2	
SLV 6	11	0.52	7.3	-5864	59494	183820	3.09	
SLV 7	11	0.52	7.13	-5725	59494	179962	3.02	
SLV 8	11	0.52	6.85	-5496	59494	173538	2.92	
SLV 9	11	0.52	7.98	-6404	59494	198606	3.34	
SLV 10	11	0.52	7.69	-6175	59494	192377	3.23	
SLV 11	11	0.52	7.52	-6036	59494	188573	3.17	
SLV 12	11	0.52	7.23	-5807	59494	182238	3.06	
SLV 13	11	0.52	8.25	-6627	59494	204586	3.44	
SLV 14	11	0.52	8	-6421	59494	199052	3.35	
SLV 15	11	0.52	8.12	-6516	59494	201624	3.39	
SLV 16	11	0.52	7.86	-6310	59494	196062	3.3	

Verifica dei meccanismi locali di collasso con analisi cinematica lineare
accelerazione limite = 196,01; forza di aggancio al piano = 30

combinazione	N top	N base	V orto	alfa0	M*	e*	a0*	
SLV 1	-987	-8358	63	0.755	6.537	0.915	600	
SLV 2	-911	-8183	63	0.769	6.488	0.918	608	
SLV 3	-955	-8275	-6	0.775	6.516	0.916	615	
SLV 4	-878	-8100	-6	0.789	6.468	0.92	624	
SLV 5	-1169	-8906	129	0.71	6.659	0.908	568	
SLV 6	-1084	-8711	128	0.723	6.601	0.911	577	
SLV 7	-1062	-8630	-100	0.734	6.586	0.912	585	
SLV 8	-976	-8435	-101	0.748	6.53	0.915	594	
SLV 9	-1290	-9284	116	0.695	6.745	0.905	558	
SLV 10	-1204	-9090	116	0.708	6.684	0.907	567	
SLV 11	-1182	-9008	-113	0.712	6.668	0.908	570	
SLV 12	-1097	-8813	-113	0.725	6.609	0.911	578	
SLV 13	-1388	-9619	21	0.703	6.816	0.903	566	
SLV 14	-1311	-9445	21	0.714	6.76	0.904	574	
SLV 15	-1355	-9536	-47	0.702	6.793	0.903	565	
SLV 16	-1279	-9362	-48	0.713	6.737	0.905	572	

Maschio 57
Dati geometrici

X ini.	Y ini.	X fin.	Y fin.	quota i.	quota.s	l	sp.	h netta	h ini.	h fin.	a
1855	1070	1300	1070	L2	L3	555	45	460	560	560	

Materiale: Muratura in pietrame consolidata con iniezioni LC1
f medio 30
tau 0.9
E 24000
G 8053.69
Fattore di confidenza 1.35

Rinforzo con rete e betoncino su entrambe le facce
Betoncino: C25/30
spessore: 3
acciaio materiale: B450C
BARRE VERTICALI
diametro (mm) 5
passo 20
ancorate ad entrambe le estremità

BARRE ORIZZONTALI
diametro (mm) 5
passo 20
ancorate ad entrambe le estremità

Verifica a pressoflessione nel piano e taglio delle sezioni rinforzate 7.8.3.2 D.M. 14-01-08 (N.T.C.)

comb.	quota sezione	gamma m.	gamma s.	gamma c.	N	V	V orto	M	M orto	c.s.	d	fvd	Vt,c	Vt,M	Vt,S
SLU 1	500	3	1.15	1.5	-45872	1683	10	1004354	-422	10.34	555	0.31	55500	7776	25585
SLU 1	1060	3	1.15	1.5	-1422	3835	-2	-17374	-23	333.74	555	0.22	55500	5619	25585
SLU 2	500	3	1.15	1.5	-47284	1714	11	1043397	-445	10.03	555	0.31	55500	7845	25585
SLU 2	1060	3	1.15	1.5	-1586	3946	-2	-14004	-26	299.1	555	0.23	55500	5627	25585
SLU 3	500	3	1.15	1.5	-50458	1716	11	1082900	-470	9.4	555	0.32	55500	7999	25585
SLU 3	1060	3	1.15	1.5	-1842	4041	-2	-8556	-29	257.53	555	0.23	55500	5639	25585
SLU 4	500	3	1.15	1.5	-50406	1686	11	1060787	-457	9.41	555	0.32	55500	7997	25585
SLU 4	1060	3	1.15	1.5	-1787	3971	-2	-9591	-28	265.45	555	0.23	55500	5637	25585
SLU 5	500	3	1.15	1.5	-51112	1702	11	1080309	-469	9.28	555	0.32	55500	8031	25585
SLU 5	1060	3	1.15	1.5	-1870	4027	-2	-7906	-29	253.76	555	0.23	55500	5641	25585
SLU 6	500	3	1.15	1.5	-49667	2297	11	1054114	-455	9.55	555	0.32	55500	7961	25585
SLU 6	1060	3	1.15	1.5	-1739	4579	-2	-30882	-27	272.85	555	0.23	55500	5634	25585
SLU 7	500	3	1.15	1.5	-51080	2328	11	1093157	-478	9.29	555	0.32	55500	8029	25585
SLU 7	1060	3	1.15	1.5	-1904	4690	-3	-27511	-29	249.25	555	0.23	55500	5642	25585
SLU 8	500	3	1.15	1.5	-54254	2330	12	1132661	-503	8.75	555	0.33	55500	8183	25585
SLU 8	1060	3	1.15	1.5	-2160	4785	-3	-22063	-33	219.7	555	0.23	55500	5655	25585
SLU 9	500	3	1.15	1.5	-54201	2300	11	1110547	-491	8.75	555	0.33	55500	8181	25585
SLU 9	1060	3	1.15	1.5	-2105	4715	-3	-23099	-32	225.44	555	0.23	55500	5652	25585
SLU 10	500	3	1.15	1.5	-54908	2316	12	1130069	-502	8.64	555	0.33	55500	8215	25585
SLU 10	1060	3	1.15	1.5	-2187	4771	-3	-21414	-33	216.95	555	0.23	55500	5656	25585
SLU 11	500	3	1.15	1.5	-59634	2188	13	1305660	-548	7.96	555	0.34	55500	8444	25585
SLU 11	1060	3	1.15	1.5	-1848	4985	-3	-22586	-30	256.72	555	0.23	55500	5640	25585
SLU 12	500	3	1.15	1.5	-61046	2219	14	1344703	-571	7.77	555	0.34	55500	8513	25585
SLU 12	1060	3	1.15	1.5	-2013	5096	-3	-19216	-33	235.72	555	0.23	55500	5648	25585
SLU 13	500	3	1.15	1.5	-64220	2221	14	1384207	-596	7.39	555	0.35	55500	8667	25585
SLU 13	1060	3	1.15	1.5	-2269	5191	-3	-13768	-36	209.12	555	0.23	55500	5660	25585
SLU 14	500	3	1.15	1.5	-64168	2191	14	1362093	-584	7.39	555	0.35	55500	8664	25585
SLU 14	1060	3	1.15	1.5	-2214	5122	-3	-14803	-35	214.31	555	0.23	55500	5657	25585
SLU 15	500	3	1.15	1.5	-64874	2207	14	1381615	-595	7.31	555	0.35	55500	8699	25585
SLU 15	1060	3	1.15	1.5	-2296	5177	-3	-13118	-36	206.63	555	0.23	55500	5661	25585
SLU 16	500	3	1.15	1.5	-63429	2802	14	1355421	-582	7.48	555	0.35	55500	8629	25585
SLU 16	1060	3	1.15	1.5	-2165	5730	-3	-36094	-34	219.11	555	0.23	55500	5655	25585
SLU 17	500	3	1.15	1.5	-64841	2833	14	1394464	-605	7.32	555	0.35	55500	8697	25585
SLU 17	1060	3	1.15	1.5	-2330	5840	-3	-32724	-36	203.63	555	0.23	55500	5663	25585
SLU 18	500	3	1.15	1.5	-68015	2835	15	1433967	-630	6.98	555	0.35	55500	8851	25585
SLU 18	1060	3	1.15	1.5	-2586	5936	-3	-27276	-40	183.47	555	0.23	55500	5676	25585
SLU 19	500	3	1.15	1.5	-67963	2805	14	1411854	-617	6.98	555	0.35	55500	8849	25585
SLU 19	1060	3	1.15	1.5	-2531	5866	-3	-28311	-39	187.45	555	0.23	55500	5673	25585
SLU 20	500	3	1.15	1.5	-68669	2821	15	1431375	-629	6.91	555	0.36	55500	8883	25585
SLU 20	1060	3	1.15	1.5	-2614	5921	-3	-26626	-40	181.55	555	0.23	55500	5677	25585

Verifica a pressoflessione nel piano e taglio delle sezioni rinforzate 7.8.3.2 D.M. 14-01-08 (N.T.C.)

comb.	quota sezione	gamma m.	gamma s.	gamma c.	N	V	V orto	M	M orto	c.s.	d	fvd	Vt,c	Vt,M	Vt,S
SLV 1	500	2	1.15	1.5	-51854	23939	244	2165158	-20809	10.02	0	0	0	0	0
SLV 1	1060	2	1.15	1.5	-1624	16242	-95	-279169	-2	187.45	437.5	0.34	65625	6681	20169
SLV 2	500	2	1.15	1.5	-50653	20966	243	2085881	-20768	10.28	0	0	0	0	0
SLV 2	1060	2	1.15	1.5	-1526	13160	-93	-217416	34	238.49	467.5	0.34	70125	7124	21551
SLV 3	500	2	1.15	1.5	-54043	24733	-134	1934325	24951	9.87	555	0.49	83250	12260	25585
SLV 3	1060	2	1.15	1.5	-2006	17573	72	-285714	-111	181.46	467.5	0.34	70125	7159	21551
SLV 4	500	2	1.15	1.5	-52841	21760	-136	1855048	24992	10.13	555	0.49	83250	12172	25585
SLV 4	1060	2	1.15	1.5	-1908	14491	74	-223960	-75	218.89	487.5	0.34	73125	7451	22473
SLV 5	500	2	1.15	1.5	-47243	8652	656	1766066	-75978	11.21	555	0.47	83250	11765	25585
SLV 5	1060	2	1.15	1.5	-1142	7158	-284	-116323	131	396.28	507.5	0.34	76125	7696	23395
SLV 6	500	2	1.15	1.5	-45904	5342	654	1677779	-75933	11.58	555	0.47	83250	11667	25585
SLV 6	1060	2	1.15	1.5	-1033	3726	-282	-47552	171	531.1	555	0.34	83250	8400	25585
SLV 7	500	2	1.15	1.5	-54537	11299	-607	996622	76556	10.06	555	0.49	83250	12296	25585
SLV 7	1060	2	1.15	1.5	-2416	11596	272	-138138	-232	227.04	567.5	0.34	85125	8688	26161
SLV 8	500	2	1.15	1.5	-53198	7988	-608	908336	76601	10.31	555	0.49	83250	12198	25585
SLV 8	1060	2	1.15	1.5	-2306	8163	274	-69368	-192	237.84	555	0.34	83250	8493	25585
SLV 9	500	2	1.15	1.5	-45420	-3801	630	1189292	-77503	12.08	555	0.47	83250	11632	25585
SLV 9	1060	2	1.15	1.5	-1107	553	-279	19723	139	495.63	555	0.34	83250	8406	25585
SLV 10	500	2	1.15	1.5	-44081	-7112	628	1101006	-77458	12.44	555	0.46	83250	11534	25585
SLV 10	1060	2	1.15	1.5	-997	-2879	-277	88493	179	412.57	507.5	0.34	76125	7685	23395
SLV 11	500	2	1.15	1.5	-52714	-1155	-633	419849	75030	10.4	555	0.49	83250	12163	25585
SLV 11	1060	2	1.15	1.5	-2380	4990	277	-2093	-225	230.45	555	0.34	83250	8498	25585
SLV 12	500	2	1.15	1.5	-51375	-4466	-635	331563	75076	10.68	555	0.48	83250	12065	25585
SLV 12	1060	2	1.15	1.5	-2270	1558	279	66678	-185	241.58	555	0.34	83250	8490	25585
SLV 13	500	2	1.15	1.5	-45777	-17574	157	242580	-25894	11.98	555	0.47	83250	11658	25585
SLV 13	1060	2	1.15	1.5	-1505	-5775	-79	174315	22	235	477.5	0.34	71625	7272	22012
SLV 14	500	2	1.15	1.5	-44575	-20546	155	163303	-25854	12.3	555	0.46	83250	11570	25585
SLV 14	1060	2	1.15	1.5	-1407	-8857	-77	236069	58	183.27	427.5	0.34	64125	6515	19708
SLV 15	500	2	1.15	1.5	-47965	-16780	-222	11747	19866	11.43	555	0.47	83250	11817	25585
SLV 15	1060	2	1.15	1.5	-1887	-4444	88	167771	-87	217.8	507.5	0.34	76125	7750	23395
SLV 16	500	2	1.15	1.5	-46764	-19752	-223	-67530	19907	11.73	555	0.47	83250	11730	25585
SLV 16	1060	2	1.15	1.5	-1789	-7526	90	229524	-51	183.86	467.5	0.34	70125	7143	21551

Verifica a pressoflessione fuori piano muratura rinforzata D.M. 14-01-08 (N.T.C.)
quota 730 Ta 0 Wa 0.1 denominatore 8

comb.	fd	fcd	fyd	N	Sa	M	x	c.s.
SLV 1	11	141	3913	-32474	0.39	190181	555	18.41
SLV 2	11	141	3913	-31501	0.39	190181	555	18.86
SLV 3	11	141	3913	-35700	0.39	190181	555	17.06
SLV 4	11	141	3913	-34727	0.39	190181	555	17.45
SLV 5	11	141	3913	-27934	0.39	190181	555	20.72
SLV 6	11	141	3913	-26850	0.39	190181	555	21.36
SLV 7	11	141	3913	-38688	0.39	190181	555	15.75
SLV 8	11	141	3913	-37604	0.39	190181	555	16.2
SLV 9	11	141	3913	-27222	0.39	190181	555	21.13
SLV 10	11	141	3913	-26138	0.39	190181	555	21.8

comb.	fd	fcd	fyd	N	Sa	M	x	c.s.	
SLV 11	11	141	3913	-37976	0.39	190181	555	16.04	
SLV 12	11	141	3913	-36892	0.39	190181	555	16.51	
SLV 13	11	141	3913	-30100	0.39	190181	555	19.55	
SLV 14	11	141	3913	-29127	0.39	190181	555	20.06	
SLV 15	11	141	3913	-33326	0.39	190181	555	18.03	
SLV 16	11	141	3913	-32353	0.39	190181	555	18.47	

Per la verifica seguente non si considerano i rinforzi predisposti.

Verifica dei meccanismi locali di collasso con analisi cinematica lineare
accelerazione limite = 196,01; forza di aggancio al piano = 30

combinazione	N top	N base	V orto	alfa0	M*	e*	a0*	
SLV 1	-1624	-51854	-95	1.253	26.103	0.952	957	
SLV 2	-1526	-50653	-93	1.262	26.067	0.954	961	
SLV 3	-2006	-54043	72	1.223	26.257	0.944	941	
SLV 4	-1908	-52841	74	1.231	26.215	0.946	946	
SLV 5	-1142	-47243	-284	1.281	25.943	0.963	967	
SLV 6	-1033	-45904	-282	1.292	25.912	0.966	971	
SLV 7	-2416	-54537	272	1.178	26.445	0.937	914	
SLV 8	-2306	-53198	274	1.186	26.393	0.939	918	
SLV 9	-1107	-45420	-279	1.285	25.932	0.964	968	
SLV 10	-997	-44081	-277	1.295	25.903	0.967	973	
SLV 11	-2380	-52714	277	1.18	26.428	0.937	915	
SLV 12	-2270	-51375	279	1.189	26.376	0.939	919	
SLV 13	-1505	-45777	-79	1.264	26.059	0.955	962	
SLV 14	-1407	-44575	-77	1.273	26.025	0.957	967	
SLV 15	-1887	-47965	88	1.232	26.207	0.947	946	
SLV 16	-1789	-46764	90	1.24	26.166	0.948	950	

Maschio 58
Maschio considerato membratura sismica secondaria
Dati geometrici

X ini.	Y ini.	X fin.	Y fin.	quota i.	quota.s	l	sp.	h netta	h ini.	h fin.	a
1855	1530	1740	1530	L2	L3	115	70	460	560	560	

Materiale: Muratura in pietrame consolidata con iniezioni LC1
f medio 30
tau 0.9
E 24000
G 8053.69
Fattore di confidenza 1.35

Verifica a pressoflessione per azioni non sismiche 4.5.6.2 D.M. 14-01-08 (N.T.C.) gammaM 3

comb.	quota	N	M	p	es1	es2	ea	ev	e ver (cm)	Ft	Fl	Nu (daN)	
1	1060	-1195	-12355	1	0	0	2.3	0,00	2,30	0,83	0,73	36217	
1	730	-6453	-26265	1	0	0	2.3	0,00	2,30	0,83	0,89	44248	
1	500	-9630	-75030	1	0	0	2.3	0,00	2,30	0,83	0,79	39226	
2	1060	-1222	-13874	1	0	0	2.3	0,00	2,30	0,83	0,71	35432	
2	730	-6477	-28640	1	0	0	2.3	0,00	2,30	0,83	0,88	43774	
2	500	-9648	-75738	1	0	0	2.3	0,00	2,30	0,83	0,79	39147	
3	1060	-1269	-15703	1	0	0	2.3	0,00	2,30	0,83	0,70	34639	
3	730	-6562	-29107	1	0	0	2.3	0,00	2,30	0,83	0,88	43755	
3	500	-9716	-75336	1	0	0	2.3	0,00	2,30	0,83	0,79	39277	
4	1060	-1262	-14967	1	0	0	2.3	0,00	2,30	0,83	0,70	35035	
4	730	-6574	-26932	1	0	0	2.3	0,00	2,30	0,83	0,89	44212	
4	500	-9727	-74455	1	0	0	2.3	0,00	2,30	0,83	0,79	39411	
5	1060	-1276	-15727	1	0	0	2.3	0,00	2,30	0,83	0,70	34672	
5	730	-6586	-28119	1	0	0	2.3	0,00	2,30	0,83	0,88	43979	
5	500	-9736	-74810	1	0	0	2.3	0,00	2,30	0,83	0,79	39372	
6	1060	-1258	-15452	1	0	0	2.3	0,00	2,30	0,83	0,70	34706	
6	730	-6531	-29832	1	0	0	2.3	0,00	2,30	0,83	0,88	43576	
6	500	-9691	-76051	1	0	0	2.3	0,00	2,30	0,83	0,79	39150	
7	1060	-1286	-16971	1	0	0	2.3	0,00	2,30	0,83	0,68	33993	
7	730	-6555	-32207	1	0	0	2.3	0,00	2,30	0,83	0,87	43110	
7	500	-9710	-76760	1	0	0	2.3	0,00	2,30	0,83	0,79	39072	
8	1060	-1333	-18799	1	0	0	2.3	0,00	2,30	0,83	0,67	33288	
8	730	-6640	-32674	1	0	0	2.3	0,00	2,30	0,83	0,87	43100	
8	500	-9778	-76358	1	0	0	2.3	0,00	2,30	0,83	0,79	39202	
9	1060	-1325	-18064	1	0	0	2.3	0,00	2,30	0,83	0,68	33657	
9	730	-6652	-30499	1	0	0	2.3	0,00	2,30	0,83	0,88	43553	
9	500	-9789	-75477	1	0	0	2.3	0,00	2,30	0,83	0,79	39335	
10	1060	-1339	-18823	1	0	0	2.3	0,00	2,30	0,83	0,67	33326	
10	730	-6664	-31687	1	0	0	2.3	0,00	2,30	0,83	0,87	43324	
10	500	-9798	-75831	1	0	0	2.3	0,00	2,30	0,83	0,79	39296	
11	1060	-1553	-16062	1	0	0	2.3	0,00	2,30	0,83	0,73	36217	
11	730	-8389	-34144	1	0	0	2.3	0,00	2,30	0,83	0,89	44248	
11	500	-12518	-97539	1	0	0	2.3	0,00	2,30	0,83	0,79	39226	
12	1060	-1581	-17581	1	0	0	2.3	0,00	2,30	0,83	0,72	35610	
12	730	-8413	-36520	1	0	0	2.3	0,00	2,30	0,83	0,88	43883	
12	500	-12537	-98247	1	0	0	2.3	0,00	2,30	0,83	0,79	39165	
13	1060	-1628	-19410	1	0	0	2.3	0,00	2,30	0,83	0,70	34986	
13	730	-8498	-36987	1	0	0	2.3	0,00	2,30	0,83	0,88	43867	
13	500	-12605	-97845	1	0	0	2.3	0,00	2,30	0,83	0,79	39265	
14	1060	-1620	-18674	1	0	0	2.3	0,00	2,30	0,83	0,71	35296	
14	730	-8510	-34811	1	0	0	2.3	0,00	2,30	0,83	0,89	44220	
14	500	-12616	-96964	1	0	0	2.3	0,00	2,30	0,83	0,79	39368	
15	1060	-1634	-19434	1	0	0	2.3	0,00	2,30	0,83	0,70	35011	
15	730	-8522	-35999	1	0	0	2.3	0,00	2,30	0,83	0,89	44040	
15	500	-12625	-97318	1	0	0	2.3	0,00	2,30	0,83	0,79	39338	
16	1060	-1616	-19158	1	0	0	2.3	0,00	2,30	0,83	0,70	35041	
16	730	-8467	-37711	1	0	0	2.3	0,00	2,30	0,83	0,88	43730	
16	500	-12580	-98560	1	0	0	2.3	0,00	2,30	0,83	0,79	39167	
17	1060	-1644	-20677	1	0	0	2.3	0,00	2,30	0,83	0,69	34477	
17	730	-8491	-40087	1	0	0	2.3	0,00	2,30	0,83	0,87	43369	

muratura

comb.	quota	N	M	p	es1	es2	ea	ev	e ver (cm)	Ft	Fl	Nu (daN)	
17	500	-12598	-99269	1	0	0	2.3	0,00	2,30	0,83	0,79	39107	
18	1060	-1691	-22506	1	0	0	2.3	0,00	2,30	0,83	0,68	33909	
18	730	-8576	-40554	1	0	0	2.3	0,00	2,30	0,83	0,87	43359	
18	500	-12667	-98867	1	0	0	2.3	0,00	2,30	0,83	0,79	39207	
19	1060	-1684	-21770	1	0	0	2.3	0,00	2,30	0,83	0,69	34202	
19	730	-8588	-38378	1	0	0	2.3	0,00	2,30	0,83	0,88	43710	
19	500	-12678	-97986	1	0	0	2.3	0,00	2,30	0,83	0,79	39310	
20	1060	-1698	-22530	1	0	0	2.3	0,00	2,30	0,83	0,68	33936	
20	730	-8600	-39566	1	0	0	2.3	0,00	2,30	0,83	0,88	43532	
20	500	-12687	-98340	1	0	0	2.3	0,00	2,30	0,83	0,79	39280	

Verifica a taglio con rottura per fessurazione diagonale per azioni non sismiche Circ.617 C8.7.1.5 gammaM 3

comb.	quota	Vd	N	ftd	b	sigma0	Vu	c.s.	
SLU 1	750	72	-5706	0.33	1.5	0.71	3163	44.03	
SLU 1	600	-4	-8391	0.33	1.5	1.04	3634	100	
SLU 2	750	73	-5723	0.33	1.5	0.71	3166	43.19	
SLU 2	600	-4	-8415	0.33	1.5	1.05	3638	100	
SLU 3	750	74	-5790	0.33	1.5	0.72	3179	42.71	
SLU 3	600	-4	-8507	0.33	1.5	1.06	3653	100	
SLU 4	750	73	-5802	0.33	1.5	0.72	3181	43.32	
SLU 4	600	-4	-8521	0.33	1.5	1.06	3655	100	
SLU 5	750	74	-5811	0.33	1.5	0.72	3183	42.91	
SLU 5	600	-4	-8534	0.33	1.5	1.06	3657	100	
SLU 6	750	74	-5765	0.33	1.5	0.72	3174	42.76	
SLU 6	600	-4	-8473	0.33	1.5	1.05	3648	100	
SLU 7	750	76	-5782	0.33	1.5	0.72	3177	41.97	
SLU 7	600	-4	-8498	0.33	1.5	1.06	3652	100	
SLU 8	750	77	-5850	0.33	1.5	0.73	3190	41.52	
SLU 8	600	-4	-8589	0.33	1.5	1.07	3667	100	
SLU 9	750	76	-5861	0.33	1.5	0.73	3192	42.1	
SLU 9	600	-4	-8603	0.33	1.5	1.07	3669	100	
SLU 10	750	77	-5870	0.33	1.5	0.73	3194	41.71	
SLU 10	600	-4	-8616	0.33	1.5	1.07	3671	100	
SLU 11	750	93	-7418	0.33	1.5	0.92	3471	37.17	
SLU 11	600	-5	-10908	0.33	1.5	1.35	4026	100	
SLU 12	750	95	-7435	0.33	1.5	0.92	3474	36.62	
SLU 12	600	-5	-10933	0.33	1.5	1.36	4030	100	
SLU 13	750	96	-7502	0.33	1.5	0.93	3485	36.31	
SLU 13	600	-5	-11024	0.33	1.5	1.37	4043	100	
SLU 14	750	95	-7514	0.33	1.5	0.93	3487	36.71	
SLU 14	600	-5	-11038	0.33	1.5	1.37	4045	100	
SLU 15	750	96	-7522	0.33	1.5	0.93	3489	36.45	
SLU 15	600	-5	-11051	0.33	1.5	1.37	4047	100	
SLU 16	750	96	-7477	0.33	1.5	0.93	3481	36.34	
SLU 16	600	-5	-10990	0.33	1.5	1.37	4038	100	
SLU 17	750	97	-7494	0.33	1.5	0.93	3484	35.82	
SLU 17	600	-5	-11015	0.33	1.5	1.37	4042	100	
SLU 18	750	98	-7561	0.33	1.5	0.94	3495	35.53	
SLU 18	600	-5	-11106	0.33	1.5	1.38	4055	100	
SLU 19	750	97	-7573	0.33	1.5	0.94	3497	35.92	
SLU 19	600	-5	-11121	0.33	1.5	1.38	4057	100	
SLU 20	750	98	-7582	0.33	1.5	0.94	3499	35.66	
SLU 20	600	-5	-11133	0.33	1.5	1.38	4059	100	

Verifica a pressoflessione fuori piano D.M. 14-01-08 (N.T.C.)
quota 730 Ta 0.06 Wa 0.15 denominatore 8

comb.	fd	Sa	x	N	M	Mc	c.s.	
SLV 1	11	0.52	5.99	-6503	80492	208141	2.59	
SLV 2	11	0.52	6.06	-6579	80492	210347	2.61	
SLV 3	11	0.52	6.44	-6995	80492	222302	2.76	
SLV 4	11	0.52	6.51	-7071	80492	224473	2.79	
SLV 5	11	0.52	5.29	-5744	80492	185860	2.31	
SLV 6	11	0.52	5.37	-5829	80492	188376	2.34	
SLV 7	11	0.52	6.8	-7384	80492	233341	2.9	
SLV 8	11	0.52	6.88	-7469	80492	235729	2.93	
SLV 9	11	0.52	5.15	-5590	80492	181250	2.25	
SLV 10	11	0.52	5.22	-5674	80492	183777	2.28	
SLV 11	11	0.52	6.66	-7229	80492	228964	2.84	
SLV 12	11	0.52	6.73	-7314	80492	231364	2.87	
SLV 13	11	0.52	5.51	-5987	80492	193048	2.4	
SLV 14	11	0.52	5.58	-6063	80492	195290	2.43	
SLV 15	11	0.52	5.97	-6479	80492	207442	2.58	
SLV 16	11	0.52	6.04	-6555	80492	209649	2.6	

Verifica dei meccanismi locali di collasso con analisi cinematica lineare
accelerazione limite = 196,01; forza di aggancio al piano = 30

combinazione	N top	N base	V orto	alfa0	M*	e*	a0*	
SLV 1	-1138	-8872	28	0.792	8.72	0.921	625	
SLV 2	-1153	-8969	26	0.791	8.729	0.921	624	
SLV 3	-1189	-9079	87	0.774	8.751	0.92	612	
SLV 4	-1203	-9176	85	0.773	8.76	0.919	611	
SLV 5	-1134	-9090	-80	0.783	8.718	0.922	617	
SLV 6	-1150	-9199	-82	0.78	8.727	0.921	616	
SLV 7	-1303	-9782	117	0.754	8.823	0.916	598	
SLV 8	-1319	-9890	115	0.752	8.833	0.915	597	
SLV 9	-1182	-9490	-113	0.77	8.747	0.92	608	
SLV 10	-1198	-9598	-115	0.768	8.756	0.919	607	
SLV 11	-1351	-10181	84	0.754	8.853	0.914	599	
SLV 12	-1367	-10290	82	0.752	8.864	0.914	598	
SLV 13	-1297	-10204	-83	0.761	8.819	0.916	603	
SLV 14	-1312	-10301	-85	0.759	8.828	0.916	602	
SLV 15	-1348	-10411	-24	0.765	8.852	0.915	608	
SLV 16	-1362	-10508	-26	0.763	8.861	0.914	607	

Maschio considerato membratura sismica secondaria
Dati geometrici

X ini.	Y ini.	X fin.	Y fin.	quota i.	quota.s	l	sp.	h netta	h ini.	h fin.	a
1855	135	1855	240	L2	L3	105	70	460	560	560	

Materiale: Muratura in pietrame consolidata con iniezioni LC1
f medio 30
tau 0.9
E 24000
G 8053.69
Fattore di confidenza 1.35

Verifica a pressoflessione per azioni non sismiche 4.5.6.2 D.M. 14-01-08 (N.T.C.) gammaM 3

comb.	quota	N	M	p	es1	es2	ea	ev	e ver (cm)	Ft	Fl	Nu (daN)	
1	1060	-3381	3657	1	0	9.67	2.3	0,00	11,97	0,51	0,97	26877	
1	730	-9075	39060	1	0	9.67	2.3	0,00	5,98	0,67	0,87	32025	
1	500	-12134	-7211	1	0	9.67	2.3	0,00	11,97	0,51	0,98	27279	
2	1060	-3838	5149	1	0	9.67	2.3	0,00	11,97	0,51	0,96	26649	
2	730	-9583	42462	1	0	9.67	2.3	0,00	5,99	0,67	0,87	31881	
2	500	-12598	-6715	1	0	9.67	2.3	0,00	11,97	0,51	0,98	27316	
3	1060	-4479	7150	1	0	9.68	2.3	0,00	11,98	0,51	0,95	26427	
3	730	-10290	46898	1	0	9.68	2.3	0,00	5,99	0,67	0,86	31737	
3	500	-13247	-6642	1	0	9.68	2.3	0,00	11,98	0,51	0,99	27329	
4	1060	-4296	6516	1	0	9.68	2.3	0,00	11,98	0,51	0,95	26497	
4	730	-10085	45398	1	0	9.68	2.3	0,00	5,99	0,67	0,87	31800	
4	500	-13061	-7107	1	0	9.68	2.3	0,00	11,98	0,51	0,98	27299	
5	1060	-4525	7261	1	0	9.68	2.3	0,00	11,98	0,51	0,95	26420	
5	730	-10339	47099	1	0	9.68	2.3	0,00	5,99	0,67	0,86	31739	
5	500	-13293	-6859	1	0	9.68	2.3	0,00	11,98	0,51	0,98	27317	
6	1060	-4358	6779	1	0	9.03	2.3	0,00	11,33	0,53	0,95	27407	
6	730	-10154	45921	1	0	9.03	2.3	0,00	5,67	0,69	0,87	32328	
6	500	-13121	-6635	1	0	9.03	2.3	0,00	11,33	0,53	0,98	28303	
7	1060	-4816	8270	1	0	9.1	2.3	0,00	11,40	0,53	0,95	27173	
7	730	-10663	49322	1	0	9.1	2.3	0,00	5,70	0,68	0,86	32144	
7	500	-13585	-6138	1	0	9.1	2.3	0,00	11,40	0,53	0,99	28249	
8	1060	-5457	10271	1	0	9.17	2.3	0,00	11,47	0,52	0,94	26927	
8	730	-11370	53758	1	0	9.17	2.3	0,00	5,74	0,68	0,86	31954	
8	500	-14234	-6065	1	0	9.17	2.3	0,00	11,47	0,52	0,99	28161	
9	1060	-5274	9637	1	0	9.15	2.3	0,00	11,45	0,52	0,95	27002	
9	730	-11165	52258	1	0	9.15	2.3	0,00	5,73	0,68	0,86	32027	
9	500	-14048	-6531	1	0	9.15	2.3	0,00	11,45	0,52	0,99	28158	
10	1060	-5503	10383	1	0	9.18	2.3	0,00	11,48	0,52	0,94	26917	
10	730	-11419	53959	1	0	9.18	2.3	0,00	5,74	0,68	0,86	31952	
10	500	-14280	-6282	1	0	9.18	2.3	0,00	11,48	0,52	0,99	28143	
11	1060	-4395	4754	1	0	9.67	2.3	0,00	11,97	0,51	0,97	26877	
11	730	-11797	50779	1	0	9.67	2.3	0,00	5,98	0,67	0,87	32025	
11	500	-15774	-9375	1	0	9.67	2.3	0,00	11,97	0,51	0,98	27279	
12	1060	-4852	6246	1	0	9.67	2.3	0,00	11,97	0,51	0,96	26697	
12	730	-12305	54180	1	0	9.67	2.3	0,00	5,99	0,67	0,87	31912	
12	500	-16238	-8878	1	0	9.67	2.3	0,00	11,97	0,51	0,98	27307	
13	1060	-5493	8247	1	0	9.68	2.3	0,00	11,98	0,51	0,96	26510	
13	730	-13013	58616	1	0	9.68	2.3	0,00	5,99	0,67	0,87	31797	
13	500	-16887	-8805	1	0	9.68	2.3	0,00	11,98	0,51	0,98	27317	
14	1060	-5311	7613	1	0	9.68	2.3	0,00	11,98	0,51	0,96	26569	
14	730	-12808	57116	1	0	9.68	2.3	0,00	5,99	0,67	0,87	31848	
14	500	-16701	-9270	1	0	9.68	2.3	0,00	11,98	0,51	0,98	27294	
15	1060	-5539	8358	1	0	9.68	2.3	0,00	11,98	0,51	0,96	26503	
15	730	-13062	58817	1	0	9.68	2.3	0,00	5,99	0,67	0,87	31799	
15	500	-16933	-9022	1	0	9.68	2.3	0,00	11,98	0,51	0,98	27308	
16	1060	-5373	7876	1	0	9.15	2.3	0,00	11,45	0,52	0,96	27312	
16	730	-12877	57639	1	0	9.15	2.3	0,00	5,73	0,68	0,87	32255	
16	500	-16762	-8799	1	0	9.15	2.3	0,00	11,45	0,52	0,98	28110	
17	1060	-5830	9367	1	0	9.2	2.3	0,00	11,50	0,52	0,95	27126	
17	730	-13385	61040	1	0	9.2	2.3	0,00	5,75	0,68	0,86	32114	
17	500	-17225	-8302	1	0	9.2	2.3	0,00	11,50	0,52	0,99	28079	
18	1060	-6471	11368	1	0	9.25	2.3	0,00	11,55	0,52	0,95	26924	
18	730	-14092	65477	1	0	9.25	2.3	0,00	5,78	0,68	0,86	31919	
18	500	-17874	-8229	1	0	9.25	2.3	0,00	11,55	0,52	0,99	28019	
19	1060	-6288	10734	1	0	9.24	2.3	0,00	11,54	0,52	0,95	26987	
19	730	-13887	63977	1	0	9.24	2.3	0,00	5,77	0,68	0,86	32023	
19	500	-17689	-8694	1	0	9.24	2.3	0,00	11,54	0,52	0,99	28014	
20	1060	-6517	11480	1	0	9.25	2.3	0,00	11,55	0,52	0,95	26916	
20	730	-14141	65677	1	0	9.25	2.3	0,00	5,78	0,68	0,86	31919	
20	500	-17921	-8446	1	0	9.25	2.3	0,00	11,55	0,52	0,99	28005	

Verifica a taglio con rottura per fessurazione diagonale per azioni non sismiche Circ.617 C8.7.1.5 gammaM 3

comb.	quota	Vd	N	ftd	b	sigma0	Vu	c.s.	
SLU 1	750	56	-8554	0.33	1.5	1.16	3462	61.85	
SLU 1	600	-1	-10881	0.33	1.5	1.48	3810	100	
SLU 2	750	57	-9069	0.33	1.5	1.23	3542	62.1	
SLU 2	600	-2	-11389	0.33	1.5	1.55	3882	100	
SLU 3	750	59	-9787	0.33	1.5	1.33	3650	62.16	
SLU 3	600	-2	-12093	0.33	1.5	1.65	3979	100	
SLU 4	750	58	-9580	0.33	1.5	1.3	3619	61.99	
SLU 4	600	-2	-11887	0.33	1.5	1.62	3951	100	
SLU 5	750	59	-9838	0.33	1.5	1.34	3658	62.09	
SLU 5	600	-2	-12141	0.33	1.5	1.65	3986	100	
SLU 6	750	58	-9647	0.33	1.5	1.31	3629	62.15	
SLU 6	600	-2	-11957	0.33	1.5	1.63	3961	100	
SLU 7	750	59	-10162	0.33	1.5	1.38	3706	62.32	
SLU 7	600	-2	-12465	0.33	1.5	1.7	4030	100	
SLU 8	750	61	-10880	0.33	1.5	1.48	3810	62.3	
SLU 8	600	-2	-13170	0.33	1.5	1.79	4124	100	
SLU 9	750	61	-10673	0.33	1.5	1.45	3780	62.16	
SLU 9	600	-2	-12963	0.33	1.5	1.76	4097	100	
SLU 10	750	61	-10930	0.33	1.5	1.49	3817	62.22	
SLU 10	600	-2	-13217	0.33	1.5	1.8	4130	100	
SLU 11	750	73	-11121	0.33	1.5	1.51	3844	52.84	

muratura

comb.	quota	Vd	N	ftd	b	sigma0	Vu	c.s.	
SLU 11	600	-2	-14145	0.33	1.5	1.92	4251	100	
SLU 12	750	74	-11636	0.33	1.5	1.58	3916	53.05	
SLU 12	600	-2	-14653	0.33	1.5	1.99	4315	100	
SLU 13	750	76	-12354	0.33	1.5	1.68	4015	53.17	
SLU 13	600	-2	-15357	0.33	1.5	2.09	4403	100	
SLU 14	750	75	-12146	0.33	1.5	1.65	3987	53.03	
SLU 14	600	-2	-15151	0.33	1.5	2.06	4378	100	
SLU 15	750	76	-12404	0.33	1.5	1.69	4022	53.12	
SLU 15	600	-2	-15405	0.33	1.5	2.1	4409	100	
SLU 16	750	75	-12213	0.33	1.5	1.66	3996	53.15	
SLU 16	600	-2	-15222	0.33	1.5	2.07	4387	100	
SLU 17	750	76	-12728	0.33	1.5	1.73	4065	53.32	
SLU 17	600	-2	-15730	0.33	1.5	2.14	4449	100	
SLU 18	750	78	-13446	0.33	1.5	1.83	4160	53.38	
SLU 18	600	-3	-16434	0.33	1.5	2.24	4535	100	
SLU 19	750	78	-13239	0.33	1.5	1.8	4133	53.26	
SLU 19	600	-3	-16228	0.33	1.5	2.21	4510	100	
SLU 20	750	78	-13496	0.33	1.5	1.84	4167	53.33	
SLU 20	600	-3	-16482	0.33	1.5	2.24	4540	100	

Verifica a pressoflessione fuori piano D.M. 14-01-08 (N.T.C.)
quota 730 Ta 0.06 Wa 0.15 denominatore 8

comb.	fd	Sa	x	N	M	Mc	c.s.	
SLV 1	11	0.52	9.96	-9879	73493	296568	4.04	
SLV 2	11	0.52	10.01	-9926	73493	297739	4.05	
SLV 3	11	0.52	9.77	-9693	73493	291878	3.97	
SLV 4	11	0.52	9.82	-9740	73493	293058	3.99	
SLV 5	11	0.52	10.31	-10225	73493	305172	4.15	
SLV 6	11	0.52	10.36	-10278	73493	306457	4.17	
SLV 7	11	0.52	9.68	-9603	73493	289619	3.94	
SLV 8	11	0.52	9.74	-9656	73493	290938	3.96	
SLV 9	11	0.52	10.42	-10338	73493	307937	4.19	
SLV 10	11	0.52	10.48	-10390	73493	309217	4.21	
SLV 11	11	0.52	9.8	-9716	73493	292455	3.98	
SLV 12	11	0.52	9.85	-9768	73493	293768	4	
SLV 13	11	0.52	10.34	-10254	73493	305868	4.16	
SLV 14	11	0.52	10.39	-10300	73493	307021	4.18	
SLV 15	11	0.52	10.15	-10067	73493	301248	4.1	
SLV 16	11	0.52	10.2	-10114	73493	302410	4.11	

Verifica dei meccanismi locali di collasso con analisi cinematica lineare
accelerazione limite = 196,01; forza di aggancio al piano = 30

combinazione	N top	N base	V orto	alfa0	M*	e*	a0*	
SLV 1	-4164	-13066	-86	0.501	10.516	0.889	409	
SLV 2	-4166	-13050	-89	0.5	10.518	0.889	409	
SLV 3	-4109	-12935	-57	0.507	10.466	0.889	415	
SLV 4	-4111	-12920	-60	0.507	10.468	0.889	414	
SLV 5	-4282	-13208	-66	0.497	10.626	0.889	406	
SLV 6	-4285	-13191	-69	0.496	10.628	0.889	406	
SLV 7	-4100	-12774	31	0.511	10.457	0.889	418	
SLV 8	-4102	-12756	28	0.511	10.46	0.889	418	
SLV 9	-4329	-13199	-20	0.5	10.669	0.889	409	
SLV 10	-4332	-13182	-23	0.5	10.672	0.889	408	
SLV 11	-4147	-12765	77	0.503	10.5	0.889	411	
SLV 12	-4149	-12747	74	0.503	10.503	0.889	411	
SLV 13	-4320	-13036	68	0.495	10.661	0.889	404	
SLV 14	-4322	-13020	65	0.495	10.663	0.889	404	
SLV 15	-4265	-12905	97	0.494	10.61	0.889	404	
SLV 16	-4268	-12890	94	0.494	10.612	0.889	404	

Maschio 60
Dati geometrici

X ini.	Y ini.	X fin.	Y fin.	quota i.	quota.s	l	sp.	h netta	h ini.	h fin.	a
1855	360	1855	870	L2	L3	510	70	460	560	560	

Materiale: Muratura in pietrame consolidata con iniezioni LC1
f medio 30
tau 0.9
E 24000
G 8053.69
Fattore di confidenza 1.35

Verifica a pressoflessione per azioni non sismiche 4.5.6.2 D.M. 14-01-08 (N.T.C.) gammaM 3

comb.	quota	N	M	p	es1	es2	ea	ev	e ver (cm)	Ft	Fl	Nu (daN)	
1	1060	-17356	-159959	1	0	9.14	2.3	0,00	11,44	0,52	0,94	130919	
1	730	-45296	-95970	1	0	9.14	2.3	0,00	5,72	0,68	0,99	178393	
1	500	-56336	-301201	1	0	9.14	2.3	0,00	11,44	0,52	0,97	134204	
2	1060	-19711	-172631	1	0	9.15	2.3	0,00	11,45	0,52	0,95	131272	
2	730	-47839	-104572	1	0	9.15	2.3	0,00	5,73	0,68	0,99	178288	
2	500	-58373	-324840	1	0	9.15	2.3	0,00	11,45	0,52	0,97	133981	
3	1060	-22986	-192431	1	0	9.16	2.3	0,00	11,46	0,52	0,95	131501	
3	730	-51005	-133446	1	0	9.16	2.3	0,00	5,73	0,68	0,98	177730	
3	500	-60528	-342592	1	0	9.16	2.3	0,00	11,46	0,52	0,97	133800	
4	1060	-22034	-188245	1	0	9.17	2.3	0,00	11,47	0,52	0,95	131335	
4	730	-49819	-137218	1	0	9.17	2.3	0,00	5,73	0,68	0,98	177560	
4	500	-59415	-326560	1	0	9.17	2.3	0,00	11,47	0,52	0,97	133918	
5	1060	-23212	-194581	1	0	9.17	2.3	0,00	11,47	0,52	0,95	131463	
5	730	-51091	-141519	1	0	9.17	2.3	0,00	5,73	0,68	0,98	177537	
5	500	-60433	-338380	1	0	9.17	2.3	0,00	11,47	0,52	0,97	133823	
6	1060	-22366	-188218	1	0	8.55	2.3	0,00	10,85	0,54	0,95	135706	
6	730	-50166	-132029	1	0	8.55	2.3	0,00	5,42	0,70	0,98	181245	

comb.	quota	N	M	p	es1	es2	ea	ev	e ver (cm)	Ft	Fl	Nu (daN)	
6	500	-59592	-335218	1	0	8.55	2.3	0,00	10,85	0,54	0,97	138148	
7	1060	-24721	-200889	1	0	8.61	2.3	0,00	10,91	0,54	0,95	135538	
7	730	-52709	-140631	1	0	8.61	2.3	0,00	5,45	0,70	0,98	180854	
7	500	-61629	-358858	1	0	8.61	2.3	0,00	10,91	0,54	0,96	137548	
8	1060	-27996	-220689	1	0	8.68	2.3	0,00	10,98	0,54	0,95	135231	
8	730	-55875	-169505	1	0	8.68	2.3	0,00	5,49	0,69	0,98	180014	
8	500	-63784	-376609	1	0	8.68	2.3	0,00	10,98	0,54	0,96	136951	
9	1060	-27044	-216504	1	0	8.67	2.3	0,00	10,97	0,54	0,95	135225	
9	730	-54689	-173277	1	0	8.67	2.3	0,00	5,48	0,69	0,98	179945	
9	500	-62671	-360577	1	0	8.67	2.3	0,00	10,97	0,54	0,96	137184	
10	1060	-28222	-222839	1	0	8.69	2.3	0,00	10,99	0,54	0,95	135171	
10	730	-55960	-177578	1	0	8.69	2.3	0,00	5,50	0,69	0,98	179816	
10	500	-63689	-372397	1	0	8.69	2.3	0,00	10,99	0,54	0,96	136951	
11	1060	-22562	-207947	1	0	9.14	2.3	0,00	11,44	0,52	0,94	130919	
11	730	-58885	-124761	1	0	9.14	2.3	0,00	5,72	0,68	0,99	178393	
11	500	-73237	-391561	1	0	9.14	2.3	0,00	11,44	0,52	0,97	134204	
12	1060	-24918	-220618	1	0	9.15	2.3	0,00	11,45	0,52	0,95	131198	
12	730	-61428	-133363	1	0	9.15	2.3	0,00	5,72	0,68	0,99	178311	
12	500	-75273	-415201	1	0	9.15	2.3	0,00	11,45	0,52	0,97	134031	
13	1060	-28193	-240419	1	0	9.16	2.3	0,00	11,46	0,52	0,95	131393	
13	730	-64594	-162237	1	0	9.16	2.3	0,00	5,73	0,68	0,98	177866	
13	500	-77429	-432952	1	0	9.16	2.3	0,00	11,46	0,52	0,97	133883	
14	1060	-27241	-236233	1	0	9.16	2.3	0,00	11,46	0,52	0,95	131255	
14	730	-63408	-166009	1	0	9.16	2.3	0,00	5,73	0,68	0,98	177736	
14	500	-76315	-416920	1	0	9.16	2.3	0,00	11,46	0,52	0,97	133976	
15	1060	-28419	-242569	1	0	9.16	2.3	0,00	11,46	0,52	0,95	131364	
15	730	-64680	-170310	1	0	9.16	2.3	0,00	5,73	0,68	0,98	177713	
15	500	-77334	-428740	1	0	9.16	2.3	0,00	11,46	0,52	0,97	133900	
16	1060	-27572	-236205	1	0	8.66	2.3	0,00	10,96	0,54	0,95	134798	
16	730	-63754	-160820	1	0	8.66	2.3	0,00	5,48	0,69	0,98	180722	
16	500	-76493	-425578	1	0	8.66	2.3	0,00	10,96	0,54	0,97	137412	
17	1060	-29928	-248877	1	0	8.7	2.3	0,00	11,00	0,54	0,95	134731	
17	730	-66298	-169422	1	0	8.7	2.3	0,00	5,50	0,69	0,98	180447	
17	500	-78529	-449218	1	0	8.7	2.3	0,00	11,00	0,54	0,97	136985	
18	1060	-33203	-268677	1	0	8.76	2.3	0,00	11,06	0,54	0,95	134552	
18	730	-69464	-198296	1	0	8.76	2.3	0,00	5,53	0,69	0,98	179801	
18	500	-80685	-466969	1	0	8.76	2.3	0,00	11,06	0,54	0,96	136547	
19	1060	-32251	-264491	1	0	8.75	2.3	0,00	11,05	0,54	0,95	134526	
19	730	-68277	-202068	1	0	8.75	2.3	0,00	5,52	0,69	0,98	179741	
19	500	-79571	-450937	1	0	8.75	2.3	0,00	11,05	0,54	0,97	136722	
20	1060	-33429	-270827	1	0	8.76	2.3	0,00	11,06	0,54	0,95	134505	
20	730	-69549	-206369	1	0	8.76	2.3	0,00	5,53	0,69	0,98	179643	
20	500	-80590	-462757	1	0	8.76	2.3	0,00	11,06	0,54	0,96	136548	

Verifica a taglio con rottura per fessurazione diagonale per azioni non sismiche Circ.617 C8.7.1.5 gammaM 3

comb.	quota	Vd	N	ftd	b	sigma0	Vu	c.s.	
SLU 1	750	991	-43194	0.33	1	1.21	25605	25.85	
SLU 1	600	992	-52284	0.33	1	1.46	27637	27.85	
SLU 2	750	1085	-45784	0.33	1	1.28	26200	24.14	
SLU 2	600	1087	-54735	0.33	1	1.53	28160	25.9	
SLU 3	750	1328	-49055	0.33	1	1.37	26933	20.29	
SLU 3	600	1330	-57635	0.33	1	1.61	28766	21.63	
SLU 4	750	1337	-47867	0.33	1	1.34	26669	19.95	
SLU 4	600	1339	-56425	0.33	1	1.58	28514	21.3	
SLU 5	750	1384	-49162	0.33	1	1.38	26956	19.48	
SLU 5	600	1386	-57651	0.33	1	1.61	28769	20.75	
SLU 6	750	1242	-48241	0.33	1	1.35	26752	21.55	
SLU 6	600	1244	-56690	0.33	1	1.59	28569	22.97	
SLU 7	750	1336	-50831	0.33	1	1.42	27322	20.45	
SLU 7	600	1339	-59141	0.33	1	1.66	29076	21.72	
SLU 8	750	1579	-54102	0.33	1	1.52	28025	17.75	
SLU 8	600	1581	-62040	0.33	1	1.74	29663	18.76	
SLU 9	750	1588	-52914	0.33	1	1.48	27772	17.49	
SLU 9	600	1590	-60831	0.33	1	1.7	29419	18.5	
SLU 10	750	1635	-54209	0.33	1	1.52	28048	17.15	
SLU 10	600	1638	-62057	0.33	1	1.74	29666	18.12	
SLU 11	750	1288	-56153	0.33	1	1.57	28457	22.1	
SLU 11	600	1290	-67969	0.33	1	1.9	30829	23.89	
SLU 12	750	1382	-58743	0.33	1	1.65	28994	20.97	
SLU 12	600	1385	-70421	0.33	1	1.97	31299	22.6	
SLU 13	750	1625	-62014	0.33	1	1.74	29658	18.25	
SLU 13	600	1628	-73320	0.33	1	2.05	31845	19.57	
SLU 14	750	1634	-60826	0.33	1	1.7	29418	18.01	
SLU 14	600	1637	-72111	0.33	1	2.02	31618	19.32	
SLU 15	750	1681	-62121	0.33	1	1.74	29679	17.65	
SLU 15	600	1684	-73336	0.33	1	2.05	31848	18.91	
SLU 16	750	1539	-61199	0.33	1	1.71	29494	19.17	
SLU 16	600	1542	-72375	0.33	1	2.03	31668	20.54	
SLU 17	750	1633	-63789	0.33	1	1.79	30012	18.37	
SLU 17	600	1636	-74826	0.33	1	2.1	32125	19.63	
SLU 18	750	1876	-67060	0.33	1	1.88	30653	16.34	
SLU 18	600	1879	-77725	0.33	1	2.18	32658	17.38	
SLU 19	750	1885	-65872	0.33	1	1.85	30422	16.14	
SLU 19	600	1888	-76516	0.33	1	2.14	32437	17.18	
SLU 20	750	1932	-67167	0.33	1	1.88	30674	15.87	
SLU 20	600	1935	-77742	0.33	1	2.18	32661	16.88	

Verifica a pressoflessione nel piano (7.8.2.2) e taglio con rottura per fessurazione diagonale (C8.7.1.5), gammaM = 2

comb.	quota	N	V par	V orto	M	M orto	N/(l*sp)	N/(l'*sp)	Mu	l'	fvd	Vt scorr.	Vt fess.diag.	
SLV 1	500	-38639	-2015	3257	-659866	-214800	1.08	1.08	8723879	510	0.55	19628	31754	
SLV 1	1060	-21112	6144	-167	-237548	1558	0.59	0.59	5046494	510	0.45	16122	26372	
SLV 2	500	-41649	-4739	3390	-846486	-223719	1.17	1.17	9308671	510	0.57	20230	32589	
SLV 2	1060	-21269	3310	-160	-169922	1699	0.6	0.6	5081383	510	0.45	16154	26425	
SLV 3	500	-26160	7162	2298	560242	-166628	0.73	0.73	6153319	510	0.48	17132	28028	
SLV 3	1060	-20674	10896	-208	-354263	1379	0.58	0.58	4948546	510	0.45	16035	26223	
SLV 4	500	-29171	4438	2431	373622	-175547	0.82	0.82	6794929	510	0.5	17734	28971	
SLV 4	1060	-20830	8062	-202	-286638	1520	0.58	0.58	4983539	510	0.45	16066	26276	
SLV 5	500	-70679	-14434	3981	-2202803	-247154	1.98	1.98	14245055	510	0.73	26036	39752	
SLV 5	1060	-22077	-870	39	-50876	1504	0.62	0.62	5260996	510	0.46	16315	26696	
SLV 6	500	-74031	-17468	4129	-2410630	-257086	2.07	2.07	14732976	510	0.75	26706	40498	
SLV 6	1060	-22251	-4026	46	24435	1661	0.62	0.62	5299593	510	0.46	16350	26755	

muratura

comb.	quota	N	V par	V orto	M	M orto	N/(l*sp)	N/(l'*sp)	Mu	l'	fvd	Vt scorr.	Vt fess.diag.	
SLV 7	500	-29083	16156	783	1864226	-86580	0.81	0.81	6776415	510	0.5	17717	28944	
SLV 7	1060	-20615	14969	-101	-439928	907	0.58	0.58	4935506	510	0.45	16023	26203	
SLV 8	500	-32435	13122	931	1656399	-96512	0.91	0.91	7475251	510	0.52	18387	29960	
SLV 8	1060	-20790	11813	-93	-364617	1064	0.58	0.58	4974489	510	0.45	16058	26262	
SLV 9	500	-85810	-16035	3648	-2314300	-227148	2.4	2.4	16312578	510	0.81	29062	43015	
SLV 9	1060	-22473	-2269	173	-4293	1286	0.63	0.63	5348659	510	0.46	16395	26828	
SLV 10	500	-89162	-19069	3796	-2522127	-237080	2.5	2.5	16723782	510	0.83	29732	43705	
SLV 10	1060	-22647	-5425	181	71017	1443	0.63	0.63	5387152	510	0.46	16429	26886	
SLV 11	500	-44213	14555	450	1752728	-66575	1.24	1.24	9795929	510	0.58	20743	33284	
SLV 11	1060	-21012	13570	34	-393345	689	0.59	0.59	5024045	510	0.45	16102	26338	
SLV 12	500	-47565	11522	598	1544902	-76506	1.33	1.33	10418046	510	0.6	21413	34171	
SLV 12	1060	-21186	10414	41	-318035	846	0.59	0.59	5062924	510	0.45	16137	26397	
SLV 13	500	-89074	-7350	2148	-1031524	-148114	2.5	2.5	16713232	510	0.83	29715	43687	
SLV 13	1060	-22433	1482	282	-82273	831	0.63	0.63	5339709	510	0.46	16387	26815	
SLV 14	500	-92084	-10075	2281	-1218144	-157032	2.58	2.58	17068392	510	0.85	30317	44298	
SLV 14	1060	-22589	-1352	288	-14647	972	0.63	0.63	5374286	510	0.46	16418	26867	
SLV 15	500	-76595	1827	1188	188585	-99942	2.15	2.15	15094662	510	0.76	27219	41059	
SLV 15	1060	-21994	6234	240	-198989	652	0.62	0.62	5242637	510	0.46	16299	26669	
SLV 16	500	-79605	-898	1321	1965	-108860	2.23	2.23	15506639	510	0.78	27821	41708	
SLV 16	1060	-22151	3400	246	-131363	792	0.62	0.62	5277318	510	0.46	16330	26721	

Verifica a pressoflessione fuori piano D.M. 14-01-08 (N.T.C.)
quota 730 Ta 0 Wa 0.15 denominatore 8

comb.	fd	Sa	x	N	M	Mc	c.s.	
SLV 1	11	0.39	8.11	-39061	271851	1208762	4.45	
SLV 2	11	0.39	8.58	-41320	271851	1268976	4.67	
SLV 3	11	0.39	6.77	-32599	271851	1030641	3.79	
SLV 4	11	0.39	7.24	-34858	271851	1093886	4.02	
SLV 5	11	0.39	11.46	-55214	271851	1616033	5.94	
SLV 6	11	0.39	11.99	-57730	271851	1674586	6.16	
SLV 7	11	0.39	6.99	-33672	271851	1060816	3.9	
SLV 8	11	0.39	7.51	-36187	271851	1130620	4.16	
SLV 9	11	0.39	13.02	-62707	271851	1786556	6.57	
SLV 10	11	0.39	13.54	-65222	271851	1841196	6.77	
SLV 11	11	0.39	8.55	-41164	271851	1264849	4.65	
SLV 12	11	0.39	9.07	-43680	271851	1330741	4.9	
SLV 13	11	0.39	13.29	-64037	271851	1815603	6.68	
SLV 14	11	0.39	13.76	-66295	271851	1864104	6.86	
SLV 15	11	0.39	11.95	-57574	271851	1670991	6.15	
SLV 16	11	0.39	12.42	-59833	271851	1722523	6.34	

Verifica dei meccanismi locali di collasso con analisi cinematica lineare
accelerazione limite = 196,01; forza di aggancio al piano = 30

combinazione	N top	N base	V orto	alfa0	M*	e*	a0*	
SLV 1	-21112	-38639	-167	0.497	51.901	0.889	406	
SLV 2	-21269	-41649	-160	0.496	52.046	0.89	405	
SLV 3	-20674	-26160	-208	0.501	51.495	0.889	409	
SLV 4	-20830	-29171	-202	0.5	51.639	0.889	408	
SLV 5	-22077	-70679	39	0.491	52.799	0.89	401	
SLV 6	-22251	-74031	46	0.489	52.961	0.89	399	
SLV 7	-20615	-29083	-101	0.505	51.441	0.889	412	
SLV 8	-20790	-32435	-93	0.503	51.602	0.889	411	
SLV 9	-22473	-85810	173	0.483	53.169	0.89	394	
SLV 10	-22647	-89162	181	0.481	53.332	0.89	393	
SLV 11	-21012	-44213	34	0.502	51.808	0.889	410	
SLV 12	-21186	-47565	41	0.5	51.969	0.89	408	
SLV 13	-22433	-89074	282	0.481	53.131	0.89	393	
SLV 14	-22589	-92084	288	0.479	53.277	0.89	391	
SLV 15	-21994	-76595	240	0.486	52.721	0.89	397	
SLV 16	-22151	-79605	246	0.485	52.868	0.89	396	

Maschio 61
Dati geometrici

X ini.	Y ini.	X fin.	Y fin.	quota i.	quota.s	l	sp.	h netta	h ini.	h fin.	a
1855	1010	1855	1325	L2	L3	315	70	460	560	560	

Materiale: Muratura in pietrame consolidata con iniezioni LC1
f medio 30
tau 0.9
E 24000
G 8053.69
Fattore di confidenza 1.35

Verifica a pressoflessione per azioni non sismiche 4.5.6.2 D.M. 14-01-08 (N.T.C.) gammaM 3

comb.	quota	N	M	p	es1	es2	ea	ev	e ver (cm)	Ft	Fl	Nu (daN)	
1	1060	-11376	179694	1	0	8.62	2.3	0,00	10,92	0,54	0,84	74280	
1	730	-31398	-137993	1	0	8.62	2.3	0,00	5,46	0,70	0,96	108586	
1	500	-37948	-533346	1	0	8.62	2.3	0,00	10,92	0,54	0,86	75798	
2	1060	-12866	193288	1	0	8.66	2.3	0,00	10,96	0,54	0,85	74798	
2	730	-33189	-141610	1	0	8.66	2.3	0,00	5,48	0,69	0,96	108589	
2	500	-39311	-550088	1	0	8.66	2.3	0,00	10,96	0,54	0,86	75695	
3	1060	-14953	212077	1	0	8.7	2.3	0,00	11,00	0,54	0,86	75362	
3	730	-35644	-156754	1	0	8.7	2.3	0,00	5,50	0,69	0,96	108293	
3	500	-41159	-577254	1	0	8.7	2.3	0,00	11,00	0,54	0,86	75499	
4	1060	-14357	206535	1	0	8.69	2.3	0,00	10,99	0,54	0,86	75228	
4	730	-34905	-159627	1	0	8.69	2.3	0,00	5,50	0,69	0,95	108134	
4	500	-40588	-572155	1	0	8.69	2.3	0,00	10,99	0,54	0,86	75480	
5	1060	-15102	213332	1	0	8.7	2.3	0,00	11,00	0,54	0,86	75401	
5	730	-35800	-161436	1	0	8.7	2.3	0,00	5,50	0,69	0,96	108158	
5	500	-41270	-580526	1	0	8.7	2.3	0,00	11,00	0,54	0,86	75453	

comb.	quota	N	M	p	es1	es2	ea	ev	e ver (cm)	Ft	Fl	Nu (daN)	
6	1060	-14557	209770	1	0	8.11	2.3	0,00	10,41	0,55	0,86	77431	
6	730	-34985	-151729	1	0	8.11	2.3	0,00	5,21	0,71	0,96	110391	
6	500	-40430	-562639	1	0	8.11	2.3	0,00	10,41	0,55	0,86	77872	
7	1060	-16047	223364	1	0	8.19	2.3	0,00	10,49	0,55	0,86	77562	
7	730	-36776	-155346	1	0	8.19	2.3	0,00	5,25	0,70	0,96	110246	
7	500	-41793	-579381	1	0	8.19	2.3	0,00	10,49	0,55	0,86	77612	
8	1060	-18134	242153	1	0	8.28	2.3	0,00	10,58	0,55	0,87	77718	
8	730	-39231	-170490	1	0	8.28	2.3	0,00	5,29	0,70	0,96	109799	
8	500	-43641	-606547	1	0	8.28	2.3	0,00	10,58	0,55	0,86	77235	
9	1060	-17538	236611	1	0	8.26	2.3	0,00	10,56	0,55	0,87	77686	
9	730	-38492	-173363	1	0	8.26	2.3	0,00	5,28	0,70	0,96	109700	
9	500	-43070	-601447	1	0	8.26	2.3	0,00	10,56	0,55	0,86	77266	
10	1060	-18283	243408	1	0	8.29	2.3	0,00	10,59	0,55	0,87	77732	
10	730	-39388	-175172	1	0	8.29	2.3	0,00	5,29	0,70	0,96	109664	
10	500	-43752	-609818	1	0	8.29	2.3	0,00	10,59	0,55	0,86	77178	
11	1060	-14789	233602	1	0	8.62	2.3	0,00	10,92	0,54	0,84	74280	
11	730	-40817	-179390	1	0	8.62	2.3	0,00	5,46	0,70	0,96	108586	
11	500	-49332	-693350	1	0	8.62	2.3	0,00	10,92	0,54	0,86	75798	
12	1060	-16279	247196	1	0	8.65	2.3	0,00	10,95	0,54	0,85	74690	
12	730	-42608	-183008	1	0	8.65	2.3	0,00	5,47	0,69	0,96	108587	
12	500	-50696	-710092	1	0	8.65	2.3	0,00	10,95	0,54	0,86	75716	
13	1060	-18365	265985	1	0	8.69	2.3	0,00	10,99	0,54	0,86	75162	
13	730	-45063	-198152	1	0	8.69	2.3	0,00	5,49	0,69	0,96	108347	
13	500	-52544	-737258	1	0	8.69	2.3	0,00	10,99	0,54	0,86	75554	
14	1060	-17769	260443	1	0	8.68	2.3	0,00	10,98	0,54	0,85	75047	
14	730	-44324	-201025	1	0	8.68	2.3	0,00	5,49	0,69	0,96	108225	
14	500	-51973	-732159	1	0	8.68	2.3	0,00	10,98	0,54	0,86	75542	
15	1060	-18514	267240	1	0	8.69	2.3	0,00	10,99	0,54	0,86	75195	
15	730	-45220	-202834	1	0	8.69	2.3	0,00	5,49	0,69	0,96	108240	
15	500	-52654	-740530	1	0	8.69	2.3	0,00	10,99	0,54	0,86	75517	
16	1060	-17970	263678	1	0	8.21	2.3	0,00	10,51	0,55	0,85	76827	
16	730	-44404	-193126	1	0	8.21	2.3	0,00	5,25	0,70	0,96	110047	
16	500	-51814	-722643	1	0	8.21	2.3	0,00	10,51	0,55	0,86	77474	
17	1060	-19460	277272	1	0	8.27	2.3	0,00	10,57	0,55	0,86	76981	
17	730	-46195	-196744	1	0	8.27	2.3	0,00	5,28	0,70	0,96	109949	
17	500	-53177	-739385	1	0	8.27	2.3	0,00	10,57	0,55	0,86	77287	
18	1060	-21547	296061	1	0	8.33	2.3	0,00	10,63	0,55	0,86	77168	
18	730	-48650	-211888	1	0	8.33	2.3	0,00	5,32	0,70	0,96	109605	
18	500	-55025	-766551	1	0	8.33	2.3	0,00	10,63	0,55	0,86	77000	
19	1060	-20950	290519	1	0	8.32	2.3	0,00	10,62	0,55	0,86	77126	
19	730	-47911	-214761	1	0	8.32	2.3	0,00	5,31	0,70	0,96	109523	
19	500	-54454	-761451	1	0	8.32	2.3	0,00	10,62	0,55	0,86	77023	
20	1060	-21696	297316	1	0	8.34	2.3	0,00	10,64	0,55	0,86	77184	
20	730	-48807	-216570	1	0	8.34	2.3	0,00	5,32	0,70	0,96	109497	
20	500	-55136	-769822	1	0	8.34	2.3	0,00	10,64	0,55	0,86	76955	

Verifica a taglio con rottura per fessurazione diagonale per azioni non sismiche Circ.617 C8.7.1.5 gammaM 3

comb.	quota	Vd	N	ftd	b	sigma0	Vu	c.s.	
SLU 1	750	-1478	-29583	0.33	1.46	1.34	11282	7.63	
SLU 1	600	-1483	-35188	0.33	1.46	1.6	12108	8.16	
SLU 2	750	-1514	-31374	0.33	1.46	1.42	11553	7.63	
SLU 2	600	-1519	-36868	0.33	1.46	1.67	12345	8.13	
SLU 3	750	-1569	-33829	0.33	1.46	1.53	11913	7.59	
SLU 3	600	-1574	-39035	0.33	1.46	1.77	12644	8.03	
SLU 4	750	-1557	-33090	0.33	1.46	1.5	11806	7.58	
SLU 4	600	-1562	-38284	0.33	1.46	1.74	12541	8.03	
SLU 5	750	-1575	-33986	0.33	1.46	1.54	11936	7.58	
SLU 5	600	-1580	-39124	0.33	1.46	1.77	12656	8.01	
SLU 6	750	-1645	-33170	0.33	1.46	1.5	11818	7.18	
SLU 6	600	-1651	-38313	0.33	1.46	1.74	12545	7.6	
SLU 7	750	-1681	-34961	0.33	1.46	1.59	12076	7.19	
SLU 7	600	-1686	-39993	0.33	1.46	1.81	12774	7.57	
SLU 8	750	-1735	-37416	0.33	1.46	1.7	12421	7.16	
SLU 8	600	-1742	-42160	0.33	1.46	1.91	13063	7.5	
SLU 9	750	-1723	-36678	0.33	1.46	1.66	12319	7.15	
SLU 9	600	-1729	-41409	0.33	1.46	1.88	12964	7.5	
SLU 10	750	-1741	-37573	0.33	1.46	1.7	12443	7.15	
SLU 10	600	-1747	-42249	0.33	1.46	1.92	13075	7.48	
SLU 11	750	-1922	-38458	0.33	1.46	1.74	12565	6.54	
SLU 11	600	-1928	-45744	0.33	1.46	2.07	13528	7.02	
SLU 12	750	-1957	-40249	0.33	1.46	1.83	12808	6.54	
SLU 12	600	-1964	-47424	0.33	1.46	2.15	13740	7	
SLU 13	750	-2012	-42704	0.33	1.46	1.94	13135	6.53	
SLU 13	600	-2019	-49592	0.33	1.46	2.25	14009	6.94	
SLU 14	750	-2000	-41965	0.33	1.46	1.9	13037	6.52	
SLU 14	600	-2007	-48841	0.33	1.46	2.21	13916	6.93	
SLU 15	750	-2018	-42861	0.33	1.46	1.94	13155	6.52	
SLU 15	600	-2025	-49681	0.33	1.46	2.25	14020	6.92	
SLU 16	750	-2088	-42045	0.33	1.46	1.91	13048	6.25	
SLU 16	600	-2096	-48869	0.33	1.46	2.22	13920	6.64	
SLU 17	750	-2124	-43836	0.33	1.46	1.99	13282	6.25	
SLU 17	600	-2131	-50549	0.33	1.46	2.29	14126	6.63	
SLU 18	750	-2179	-46291	0.33	1.46	2.1	13597	6.24	
SLU 18	600	-2187	-52717	0.33	1.46	2.39	14388	6.58	
SLU 19	750	-2167	-45552	0.33	1.46	2.07	13503	6.23	
SLU 19	600	-2174	-51965	0.33	1.46	2.36	14298	6.58	
SLU 20	750	-2185	-46448	0.33	1.46	2.11	13617	6.23	
SLU 20	600	-2192	-52805	0.33	1.46	2.39	14399	6.57	

Verifica a pressoflessione nel piano (7.8.2.2) e taglio con rottura per fessurazione diagonale (C8.7.1.5), gammaM = 2

comb.	quota	N	V par	V orto	M	M orto	N/(l*sp)	N/(l'*sp)	Mu	l'	fvd	Vt scorr.	Vt fess.diag.	
SLV 1	500	-22420	-3817	1284	-511356	-116938	1.02	1.02	3150970	315	0.54	11834	13149	
SLV 1	1060	-13909	-6788	184	225582	1725	0.63	0.63	2044309	315	0.46	10132	11354	
SLV 2	500	-20968	-4125	1203	-498592	-112344	0.95	0.95	2969911	315	0.52	11544	12861	
SLV 2	1060	-13828	-7743	172	250742	1484	0.63	0.63	2033328	315	0.46	10116	11335	
SLV 3	500	-32031	-310	1977	-329531	-152743	1.45	1.45	4268975	315	0.62	13756	14920	
SLV 3	1060	-14136	-4952	299	169324	2009	0.64	0.64	2075343	315	0.46	10177	11405	
SLV 4	500	-30579	-618	1897	-316767	-148148	1.39	1.39	4109027	315	0.61	13466	14666	
SLV 4	1060	-14056	-5908	287	194483	1768	0.64	0.64	2064389	315	0.46	10161	11387	
SLV 5	500	-20830	-5857	603	-826813	-58420	0.94	0.94	2952637	315	0.52	11516	12833	
SLV 5	1060	-13725	-7882	-84	286343	959	0.62	0.62	2019207	315	0.46	10095	11312	

muratura

comb.	quota	N	V par	V orto	M	M orto	N/(l*sp)	N/(l'*sp)	Mu	l'	fvd	Vt scorr.	Vt fess.diag.	
SLV 6	500	-19213	-6200	513	-812599	-53303	0.87	0.87	2746913	315	0.51	11193	12503	
SLV 6	1060	-13635	-8946	-97	314362	691	0.62	0.62	2006952	315	0.46	10077	11291	
SLV 7	500	-52869	5833	2913	-220729	-177769	2.4	2.4	6212912	315	0.81	17924	18175	
SLV 7	1060	-14484	-1764	298	98816	1906	0.66	0.66	2122560	315	0.46	10247	11484	
SLV 8	500	-51252	5491	2824	-206515	-172652	2.32	2.32	6085558	315	0.8	17600	17943	
SLV 8	1060	-14394	-2828	285	126834	1638	0.65	0.65	2110407	315	0.46	10229	11464	
SLV 9	500	-29009	-4113	708	-914758	-43842	1.32	1.32	3932480	315	0.6	13152	14387	
SLV 9	1060	-13791	-7031	-199	283391	575	0.63	0.63	2028266	315	0.46	10108	11327	
SLV 10	500	-27392	-4456	618	-900544	-38726	1.24	1.24	3746762	315	0.58	12828	14093	
SLV 10	1060	-13702	-8095	-212	311409	307	0.62	0.62	2016020	315	0.46	10090	11306	
SLV 11	500	-61048	7577	3019	-308674	-163191	2.77	2.77	6796408	315	0.89	19560	19303	
SLV 11	1060	-14550	-913	183	95864	1522	0.66	0.66	2131543	315	0.47	10260	11499	
SLV 12	500	-59431	7234	2929	-294460	-158075	2.7	2.7	6689059	315	0.87	19236	19085	
SLV 12	1060	-14461	-1978	169	123882	1254	0.66	0.66	2119399	315	0.46	10242	11479	
SLV 13	500	-49682	1995	1635	-804506	-68346	2.25	2.25	5958112	315	0.78	17286	17716	
SLV 13	1060	-14130	-3952	-201	215742	445	0.64	0.64	2074420	315	0.46	10176	11404	
SLV 14	500	-48230	1688	1555	-791742	-63752	2.19	2.19	5836933	315	0.77	16996	17503	
SLV 14	1060	-14049	-4907	-213	240901	204	0.64	0.64	2063465	315	0.46	10160	11386	
SLV 15	500	-59293	5502	2328	-622680	-104151	2.69	2.69	6679768	315	0.87	19209	19067	
SLV 15	1060	-14357	-2116	-86	159483	729	0.65	0.65	2105377	315	0.46	10221	11455	
SLV 16	500	-57841	5195	2248	-609917	-99557	2.62	2.62	6579701	315	0.86	18918	18869	
SLV 16	1060	-14277	-3072	-98	184643	488	0.65	0.65	2094450	315	0.46	10205	11437	

Verifica a pressoflessione fuori piano D.M. 14-01-08 (N.T.C.)
quota 730 Ta 0 Wa 0.15 denominatore 8

comb.	fd	Sa	x	N	M	Mc	c.s.	
SLV 1	11	0.39	8.44	-25109	167908	772855	4.6	
SLV 2	11	0.39	7.86	-23372	167908	726219	4.33	
SLV 3	11	0.39	10.59	-31507	167908	935910	5.57	
SLV 4	11	0.39	10.01	-29770	167908	893009	5.32	
SLV 5	11	0.39	7.62	-22679	167908	707318	4.21	
SLV 6	11	0.39	6.97	-20745	167908	653738	3.89	
SLV 7	11	0.39	14.79	-44006	167908	1214743	7.23	
SLV 8	11	0.39	14.14	-42072	167908	1175029	7	
SLV 9	11	0.39	9.05	-26909	167908	820130	4.88	
SLV 10	11	0.39	8.4	-24975	167908	769301	4.58	
SLV 11	11	0.39	16.21	-48237	167908	1297227	7.73	
SLV 12	11	0.39	15.56	-46302	167908	1260264	7.51	
SLV 13	11	0.39	13.18	-39211	167908	1113981	6.63	
SLV 14	11	0.39	12.6	-37474	167908	1075577	6.41	
SLV 15	11	0.39	15.33	-45609	167908	1246707	7.42	
SLV 16	11	0.39	14.75	-43872	167908	1212039	7.22	

Verifica dei meccanismi locali di collasso con analisi cinematica lineare
accelerazione limite = 196,01; forza di aggancio al piano = 30

combinazione	N top	N base	V orto	alfa0	M*	e*	a0*	
SLV 1	-13909	-22420	184	0.48	32.866	0.89	392	
SLV 2	-13828	-20968	172	0.481	32.791	0.89	393	
SLV 3	-14136	-32031	299	0.471	33.079	0.89	385	
SLV 4	-14056	-30579	287	0.473	33.004	0.89	386	
SLV 5	-13725	-20830	-84	0.487	32.694	0.89	397	
SLV 6	-13635	-19213	-97	0.488	32.611	0.89	398	
SLV 7	-14484	-52869	298	0.466	33.406	0.891	380	
SLV 8	-14394	-51252	285	0.468	33.322	0.89	382	
SLV 9	-13791	-29009	-199	0.481	32.756	0.89	393	
SLV 10	-13702	-27392	-212	0.482	32.672	0.89	393	
SLV 11	-14550	-61048	183	0.47	33.468	0.891	383	
SLV 12	-14461	-59431	169	0.471	33.384	0.891	385	
SLV 13	-14130	-49682	-201	0.475	33.073	0.89	388	
SLV 14	-14049	-48230	-213	0.476	32.998	0.89	389	
SLV 15	-14357	-59293	-86	0.476	33.287	0.89	389	
SLV 16	-14277	-57841	-98	0.477	33.211	0.89	389	

Maschio 62
Maschio considerato membratura sismica secondaria
Dati geometrici

X ini.	Y ini.	X fin.	Y fin.	quota i.	quota.s	l	sp.	h netta	h ini.	h fin.	a
1855	1445	1855	1530	L2	L3	85	70	460	560	560	

Materiale: Muratura in pietrame consolidata con iniezioni LC1
f medio 30
tau 0.9
E 24000
G 8053.69
Fattore di confidenza 1.35

Verifica a pressoflessione per azioni non sismiche 4.5.6.2 D.M. 14-01-08 (N.T.C.) gammaM 3

comb.	quota	N	M	p	es1	es2	ea	ev	e ver (cm)	Ft	Fl	Nu (daN)	
1	1060	-2807	-6238	1	0	9.42	2.3	0,00	11,72	0,52	0,92	20924	
1	730	-7709	-57127	1	0	9.42	2.3	0,00	5,86	0,68	0,73	21899	
1	500	-10490	-12852	1	0	9.42	2.3	0,00	11,72	0,52	0,96	21758	
2	1060	-3179	-7515	1	0	9.46	2.3	0,00	11,76	0,52	0,91	20770	
2	730	-8151	-61673	1	0	9.46	2.3	0,00	5,88	0,68	0,73	21786	
2	500	-10884	-14145	1	0	9.46	2.3	0,00	11,76	0,52	0,95	21659	
3	1060	-3703	-9548	1	0	9.48	2.3	0,00	11,78	0,52	0,91	20560	
3	730	-8766	-67682	1	0	9.48	2.3	0,00	5,89	0,68	0,73	21677	
3	500	-11469	-17869	1	0	9.48	2.3	0,00	11,78	0,52	0,94	21411	
4	1060	-3555	-9142	1	0	9.47	2.3	0,00	11,77	0,52	0,91	20578	
4	730	-8588	-65711	1	0	9.47	2.3	0,00	5,89	0,68	0,73	21726	
4	500	-11325	-18172	1	0	9.47	2.3	0,00	11,77	0,52	0,94	21385	

comb.	quota	N	M	p	es1	es2	ea	ev	e ver (cm)	Ft	Fl	Nu (daN)	
5	1060	-3741	-9781	1	0	9.48	2.3	0,00	11,78	0,52	0,90	20530	
5	730	-8809	-67984	1	0	9.48	2.3	0,00	5,89	0,68	0,73	21679	
5	500	-11522	-18819	1	0	9.48	2.3	0,00	11,78	0,52	0,94	21349	
6	1060	-3602	-8956	1	0	8.85	2.3	0,00	11,15	0,53	0,91	21341	
6	730	-8640	-66103	1	0	8.85	2.3	0,00	5,57	0,69	0,73	22140	
6	500	-11352	-16810	1	0	8.85	2.3	0,00	11,15	0,53	0,95	22208	
7	1060	-3974	-10233	1	0	8.93	2.3	0,00	11,23	0,53	0,91	21178	
7	730	-9082	-70648	1	0	8.93	2.3	0,00	5,61	0,69	0,73	22001	
7	500	-11746	-18103	1	0	8.93	2.3	0,00	11,23	0,53	0,94	22066	
8	1060	-4498	-12267	1	0	9.01	2.3	0,00	11,31	0,53	0,90	20956	
8	730	-9697	-76657	1	0	9.01	2.3	0,00	5,65	0,69	0,72	21861	
8	500	-12331	-21827	1	0	9.01	2.3	0,00	11,31	0,53	0,94	21774	
9	1060	-4350	-11861	1	0	8.98	2.3	0,00	11,28	0,53	0,90	20984	
9	730	-9519	-74687	1	0	8.98	2.3	0,00	5,64	0,69	0,72	21917	
9	500	-12187	-22130	1	0	8.98	2.3	0,00	11,28	0,53	0,93	21764	
10	1060	-4536	-12499	1	0	9.01	2.3	0,00	11,31	0,53	0,90	20928	
10	730	-9740	-76960	1	0	9.01	2.3	0,00	5,66	0,69	0,72	21861	
10	500	-12384	-22777	1	0	9.01	2.3	0,00	11,31	0,53	0,93	21711	
11	1060	-3649	-8109	1	0	9.42	2.3	0,00	11,72	0,52	0,92	20924	
11	730	-10022	-74265	1	0	9.42	2.3	0,00	5,86	0,68	0,73	21899	
11	500	-13637	-16708	1	0	9.42	2.3	0,00	11,72	0,52	0,96	21758	
12	1060	-4021	-9386	1	0	9.45	2.3	0,00	11,75	0,52	0,91	20803	
12	730	-10463	-78811	1	0	9.45	2.3	0,00	5,87	0,68	0,73	21811	
12	500	-14031	-18000	1	0	9.45	2.3	0,00	11,75	0,52	0,95	21681	
13	1060	-4545	-11420	1	0	9.47	2.3	0,00	11,77	0,52	0,91	20627	
13	730	-11079	-84820	1	0	9.47	2.3	0,00	5,89	0,68	0,73	21722	
13	500	-14616	-21725	1	0	9.47	2.3	0,00	11,77	0,52	0,95	21483	
14	1060	-4397	-11014	1	0	9.46	2.3	0,00	11,76	0,52	0,91	20644	
14	730	-10901	-82849	1	0	9.46	2.3	0,00	5,88	0,68	0,73	21762	
14	500	-14472	-22028	1	0	9.46	2.3	0,00	11,76	0,52	0,94	21465	
15	1060	-4583	-11652	1	0	9.47	2.3	0,00	11,77	0,52	0,91	20603	
15	730	-11122	-85122	1	0	9.47	2.3	0,00	5,89	0,68	0,73	21724	
15	500	-14669	-22674	1	0	9.47	2.3	0,00	11,77	0,52	0,94	21434	
16	1060	-4444	-10828	1	0	8.96	2.3	0,00	11,26	0,53	0,91	21263	
16	730	-10953	-83241	1	0	8.96	2.3	0,00	5,63	0,69	0,73	22095	
16	500	-14499	-20666	1	0	8.96	2.3	0,00	11,26	0,53	0,95	22130	
17	1060	-4816	-12105	1	0	9.01	2.3	0,00	11,31	0,53	0,91	21135	
17	730	-11394	-87786	1	0	9.01	2.3	0,00	5,66	0,69	0,73	21988	
17	500	-14893	-21958	1	0	9.01	2.3	0,00	11,31	0,53	0,95	22023	
18	1060	-5340	-14138	1	0	9.07	2.3	0,00	11,37	0,53	0,90	20953	
18	730	-12010	-93795	1	0	9.07	2.3	0,00	5,69	0,68	0,72	21876	
18	500	-15478	-25683	1	0	9.07	2.3	0,00	11,37	0,53	0,94	21795	
19	1060	-5192	-13732	1	0	9.06	2.3	0,00	11,36	0,53	0,90	20976	
19	730	-11832	-91825	1	0	9.06	2.3	0,00	5,68	0,69	0,73	21921	
19	500	-15334	-25986	1	0	9.06	2.3	0,00	11,36	0,53	0,94	21786	
20	1060	-5378	-14371	1	0	9.08	2.3	0,00	11,38	0,53	0,90	20929	
20	730	-12053	-94098	1	0	9.08	2.3	0,00	5,69	0,68	0,72	21876	
20	500	-15531	-26632	1	0	9.08	2.3	0,00	11,38	0,53	0,94	21744	

Verifica a taglio con rottura per fessurazione diagonale per azioni non sismiche Circ.617 C8.7.1.5 gammaM 3

comb.	quota	Vd	N	ftd	b	sigma0	Vu	c.s.	
SLU 1	750	-47	-7306	0.33	1.5	1.23	2862	61.09	
SLU 1	600	1	-9228	0.33	1.5	1.55	3144	100	
SLU 2	750	-48	-7754	0.33	1.5	1.3	2930	61.67	
SLU 2	600	1	-9669	0.33	1.5	1.63	3205	100	
SLU 3	750	-49	-8387	0.33	1.5	1.41	3023	61.74	
SLU 3	600	2	-10278	0.33	1.5	1.73	3288	100	
SLU 4	750	-49	-8210	0.33	1.5	1.38	2997	61.24	
SLU 4	600	2	-10098	0.33	1.5	1.7	3263	100	
SLU 5	750	-49	-8434	0.33	1.5	1.42	3030	61.5	
SLU 5	600	2	-10318	0.33	1.5	1.73	3293	100	
SLU 6	750	-49	-8256	0.33	1.5	1.39	3004	61.81	
SLU 6	600	2	-10155	0.33	1.5	1.71	3271	100	
SLU 7	750	-49	-8704	0.33	1.5	1.46	3069	62.31	
SLU 7	600	2	-10596	0.33	1.5	1.78	3330	100	
SLU 8	750	-51	-9337	0.33	1.5	1.57	3159	62.27	
SLU 8	600	2	-11204	0.33	1.5	1.88	3410	100	
SLU 9	750	-51	-9159	0.33	1.5	1.54	3134	61.81	
SLU 9	600	2	-11024	0.33	1.5	1.85	3386	100	
SLU 10	750	-51	-9383	0.33	1.5	1.58	3165	62.03	
SLU 10	600	3	-11245	0.33	1.5	1.89	3415	100	
SLU 11	750	-61	-9498	0.33	1.5	1.6	3181	52.24	
SLU 11	600	2	-11997	0.33	1.5	2.02	3510	100	
SLU 12	750	-62	-9946	0.33	1.5	1.67	3243	52.68	
SLU 12	600	2	-12438	0.33	1.5	2.09	3565	100	
SLU 13	750	-63	-10579	0.33	1.5	1.78	3328	52.8	
SLU 13	600	2	-13046	0.33	1.5	2.19	3640	100	
SLU 14	750	-63	-10401	0.33	1.5	1.75	3304	52.45	
SLU 14	600	2	-12866	0.33	1.5	2.16	3618	100	
SLU 15	750	-63	-10626	0.33	1.5	1.79	3334	52.65	
SLU 15	600	2	-13087	0.33	1.5	2.2	3645	100	
SLU 16	750	-63	-10447	0.33	1.5	1.76	3310	52.83	
SLU 16	600	2	-12924	0.33	1.5	2.17	3625	100	
SLU 17	750	-63	-10896	0.33	1.5	1.83	3369	53.22	
SLU 17	600	2	-13364	0.33	1.5	2.25	3678	100	
SLU 18	750	-65	-11528	0.33	1.5	1.94	3451	53.27	
SLU 18	600	3	-13973	0.33	1.5	2.35	3750	100	
SLU 19	750	-65	-11351	0.33	1.5	1.91	3428	52.94	
SLU 19	600	3	-13793	0.33	1.5	2.32	3729	100	
SLU 20	750	-65	-11575	0.33	1.5	1.95	3457	53.12	
SLU 20	600	3	-14013	0.33	1.5	2.36	3755	100	

Verifica a pressoflessione fuori piano D.M. 14-01-08 (N.T.C.)
quota 730 Ta 0.06 Wa 0.15 denominatore 8

comb.	fd	Sa	x	N	M	Mc	c.s.	
SLV 1	11	0.52	10.17	-8161	59494	244148	4.1	
SLV 2	11	0.52	10.03	-8053	59494	241472	4.06	
SLV 3	11	0.52	10.63	-8533	59494	253309	4.26	
SLV 4	11	0.52	10.5	-8426	59494	250683	4.21	
SLV 5	11	0.52	9.82	-7881	59494	237157	3.99	
SLV 6	11	0.52	9.67	-7762	59494	234135	3.94	

muratura

comb.	fd	Sa	x	N	M	Mc	c.s.	
SLV 7	11	0.52	11.36	-9122	59494	267455	4.5	
SLV 8	11	0.52	11.21	-9003	59494	264617	4.45	
SLV 9	11	0.52	9.98	-8009	59494	240359	4.04	
SLV 10	11	0.52	9.83	-7889	59494	237355	3.99	
SLV 11	11	0.52	11.52	-9250	59494	270459	4.55	
SLV 12	11	0.52	11.37	-9130	59494	267641	4.5	
SLV 13	11	0.52	10.7	-8586	59494	254593	4.28	
SLV 14	11	0.52	10.56	-8478	59494	251974	4.24	
SLV 15	11	0.52	11.16	-8958	59494	263557	4.43	
SLV 16	11	0.52	11.03	-8851	59494	260988	4.39	

Verifica dei meccanismi locali di collasso con analisi cinematica lineare
accelerazione limite = 196,01; forza di aggancio al piano = 30

combinazione	N top	N base	V orto	alfa0	M*	e*	a0*	
SLV 1	-3383	-11137	-80	0.498	8.524	0.889	407	
SLV 2	-3322	-10972	-80	0.502	8.469	0.889	410	
SLV 3	-3555	-11667	-104	0.484	8.684	0.89	395	
SLV 4	-3494	-11502	-104	0.487	8.628	0.889	398	
SLV 5	-3219	-10466	13	0.52	8.374	0.889	425	
SLV 6	-3152	-10283	13	0.525	8.312	0.889	429	
SLV 7	-3792	-12233	-65	0.475	8.905	0.89	388	
SLV 8	-3725	-12050	-65	0.479	8.842	0.89	391	
SLV 9	-3248	-10414	70	0.509	8.4	0.889	416	
SLV 10	-3180	-10230	70	0.514	8.338	0.889	420	
SLV 11	-3821	-12180	-9	0.482	8.932	0.89	393	
SLV 12	-3754	-11997	-9	0.486	8.869	0.89	396	
SLV 13	-3478	-10961	108	0.488	8.613	0.889	398	
SLV 14	-3418	-10796	108	0.492	8.557	0.889	402	
SLV 15	-3650	-11491	85	0.481	8.773	0.89	392	
SLV 16	-3590	-11326	85	0.484	8.716	0.89	396	